## B-5 Power door lock
**B-5 Elektrische türverriegelung**
**B-5 Verrouillage centralisé des portes**
**B-5 Bloqueo automático de las puertas**

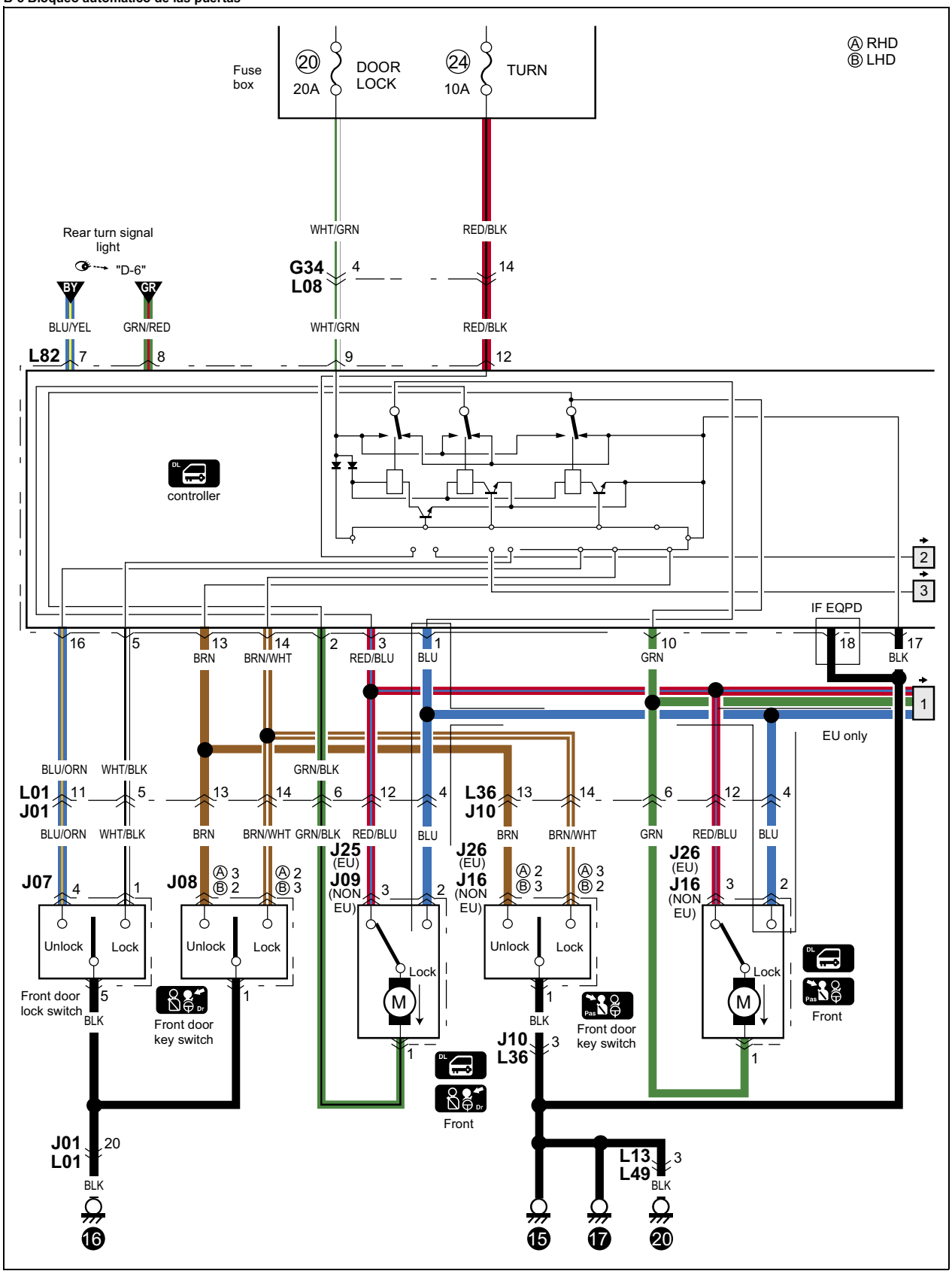

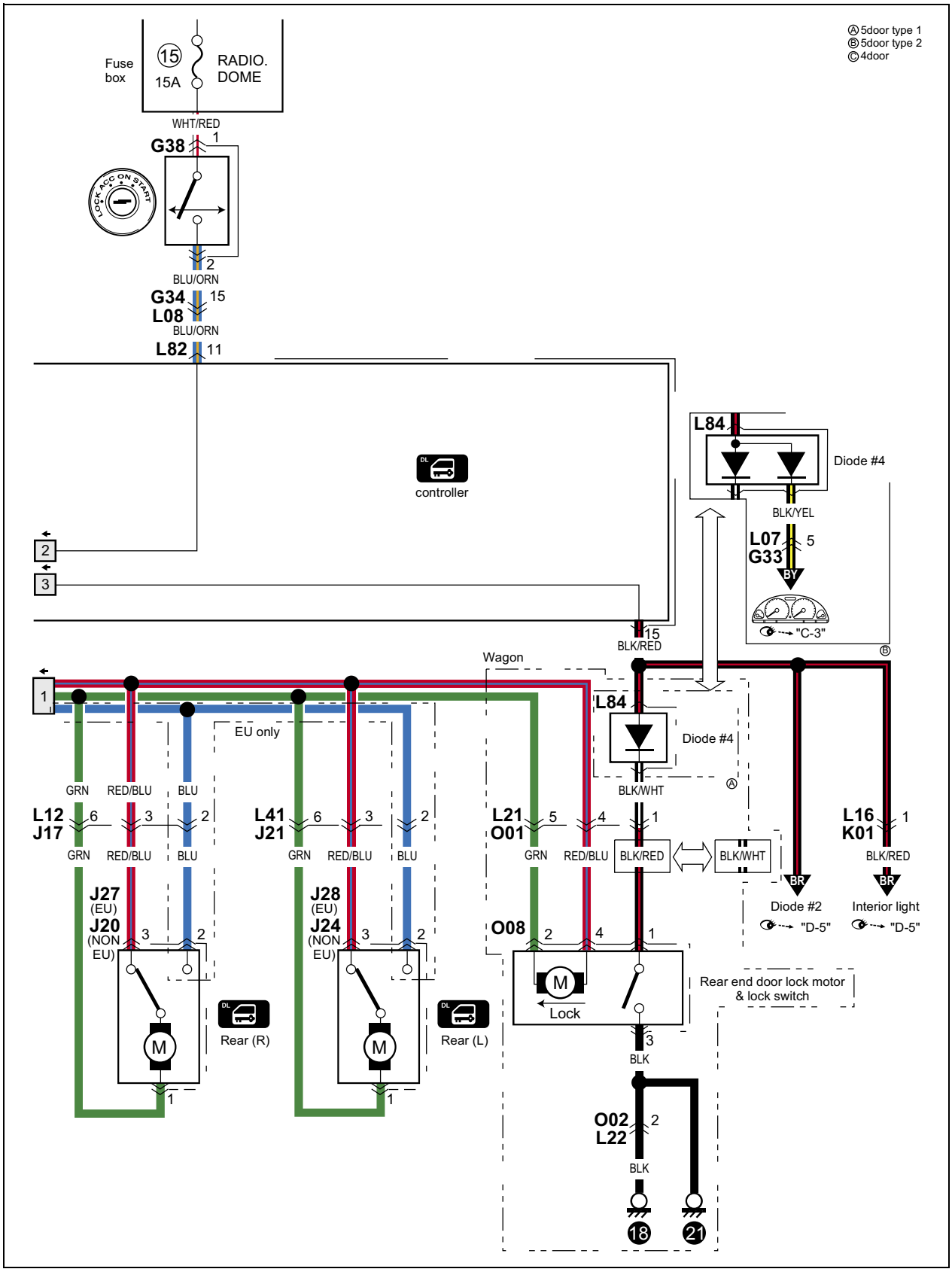
Ⓐ 5door type 1
Ⓑ 5door type 2
Ⓒ 4door
Fuse box
15
15A
RADIO. DOME
WHT/RED
G38
1
LOCK ACC ON START
2
BLU/ORN
G34
15
L08
BLU/ORN
L82
11
controller
2
3
L84
Diode #4
BLK/YEL
L07
G33
5
BY
"C-3"
15
BLK/RED
Wagon
1
L84
Diode #4
BLK/WHT
EU only
GRN
RED/BLU
BLU
L12
J17
6
3
2
L41
J21
6
3
2
L21
O01
5
4
1
L16
K01
1
BLK/RED
BLK/WHT
BR
Diode #2
"D-5"
Interior light
"D-5"
J27
(EU)
J20
(NON EU)
J28
(EU)
J24
(NON EU)
O08
M
Lock
Rear end door lock motor & lock switch
Rear (R)
Rear (L)
BLK
O02
L22
18
21