SUZUKI

AN250

SERVICE MANUAL

99500-32113-01E

FOREWORD

This manual contains an introductory description on the SUZUKI AN250 and procedures for its inspection/service and overhaul of its main components.
Other information considered as generally known is not included.
Read the GENERAL INFORMATION section to familiarize yourself with the motorcycle and its maintenance. Use this section as well as other sections to use as a guide for proper inspection and service.
This manual will help you know the motorcycle better so that you can assure your customers of fast and reliable service.

- *This manual has been prepared on the basis of the latest specifications at the time of publication. If modifications have been made since then, differences may exist between the content of this manual and the actual motorcycle.*
- *Illustrations in this manual are used to show the basic principles of operation and work procedures. They may not represent the actual motorcycle exactly in detail.*
- *This manual is written for persons who have enough knowledge, skills and tools, including special tools, for servicing SUZUKI motorcycles. If you do not have the proper knowledge and tools, ask your authorized SUZUKI motorcycle dealer to help you.*

⚠WARNING

Inexperienced mechanics or mechanics without the proper tools and equipment may not be able to properly perform the services described in this manual. Improper repair may result in injury to the mechanic and may render the motorcycle unsafe for the rider and passenger.

SUZUKI MOTOR CORPORATION
Motorcycle Service Department

GROUP INDEX

HOW TO USE THIS MANUAL

TO LOCATE WHAT YOU ARE LOOKING FOR:

1. The text of this manual is divided into sections.
2. The section titles are listed in the GROUP INDEX.
3. Holding the manual as shown at the right will allow you to find the first page of the section easily.
4. The contents are listed on the first page of each section to help find the item and page you need.

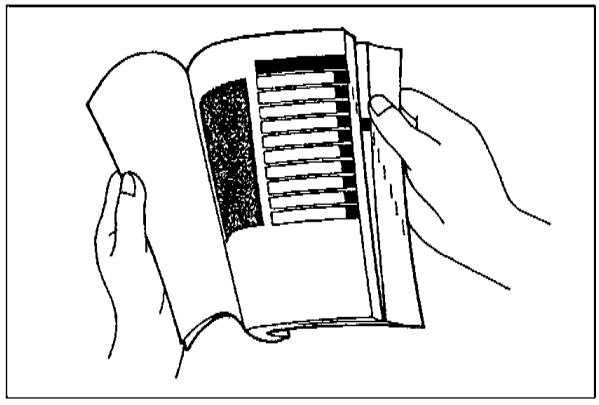

COMPONENT PARTS AND WORK TO BE DONE

Under the name of each system or unit, is its exploded view. Work instructions and other service information such as the tightening torque, lubricating points and locking agent points, are provided.

Example: Crankcase bracket

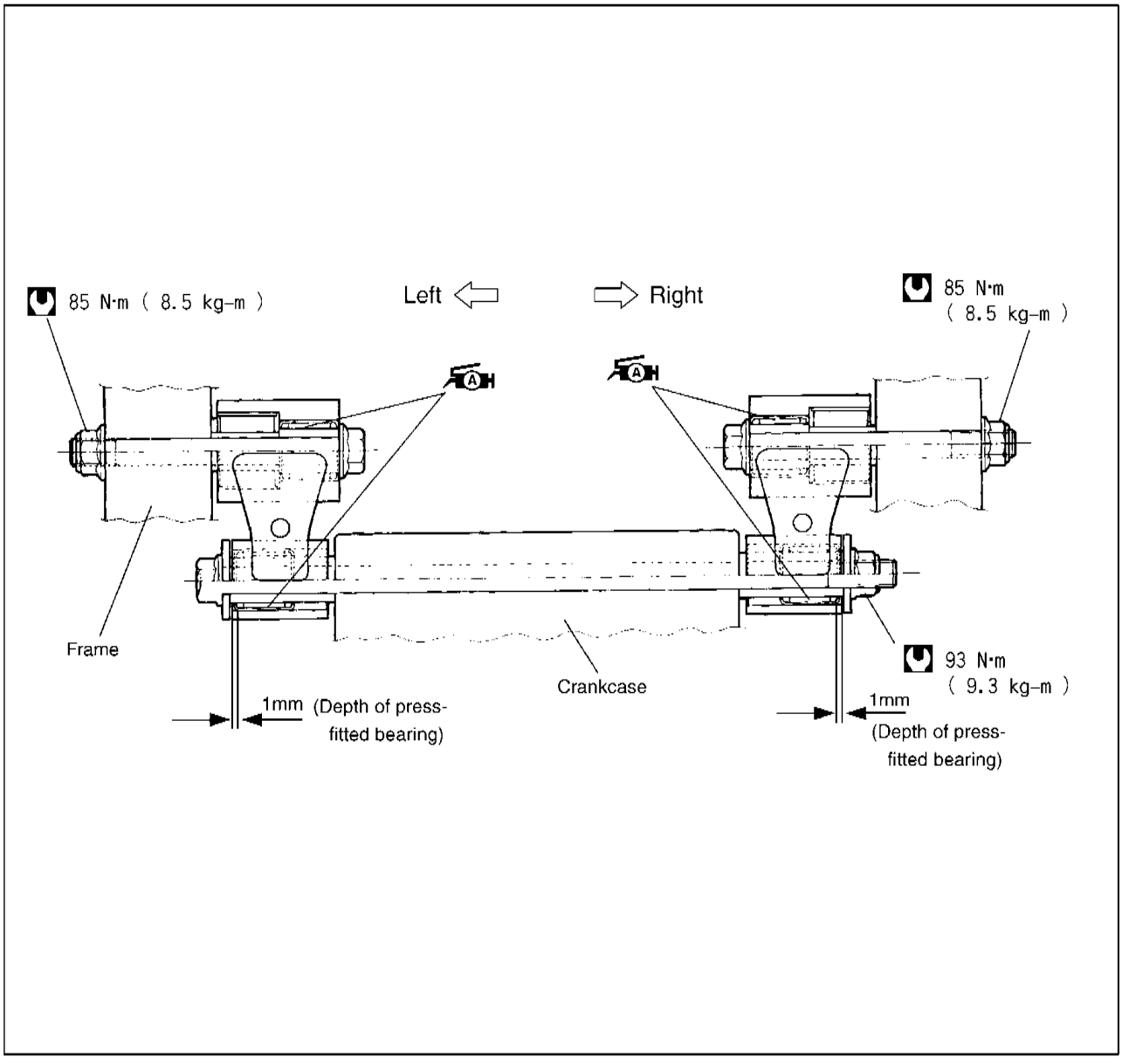

SYMBOL

Listed in the table below are the symbols indicating instructions and other information necessary for servicing. The meaning of each symbol is also included in the table.

SYMBOL	DEFINITION	SYMBOL	DEFINITION
	Torque control required. Data beside it indicates specified torque.		Measure in voltage range.
	Apply oil. Use engine oil unless otherwise specified.		Measure in resistance range.
	Apply SUZUKI SUPER GREASE “A”. 99000-25010		Measure in current range.
	Apply SUZUKI MOLY PASTE. 99000-25140		Measure in diode test range.
	Apply SUZUKI BOND “1215”. 99000-31110		Measure in continuity test range.
	Apply THREAD LOCK SUPER “1303”. 99000-32030		Use special tool.
	Apply THREAD LOCK “1322”. 99000-32110		Use engine coolant. 99000-99032-11X
	Apply THREAD LOCK SUPER “1360”. 99000-32130		Use fork oil. 99000-99044-10G
	Apply or use brake fluid.		

GENERAL INFORMATION

1

CONTENTS

WARNING/CAUTION/NOTE

Please read this manual and follow its instructions carefully. To emphasize special information, the symbol and the words WARNING, CAUTION and NOTE have special meanings. Pay special attention to the messages highlighted by these signal words.

⚠WARNING

Indicates a potential hazard that could result in death or injury.

⚠CAUTION

Indicates a potential hazard that could result in motorcycle damage.

NOTE:
Indicates special information to make maintenance easier or instructions clearer.

Please note, however, that the warnings and cautions contained in this manual cannot possibly cover all potential hazards relating to the servicing, or lack of servicing, of the motorcycle. In addition to the WARNINGS and CAUTIONS stated, you must use good judgement and basic mechanical safety principles. If you are unsure about how to perform a particular service operation, ask a more experienced mechanic for advice.

GENERAL PRECAUTIONS

⚠WARNING

- **Proper service and repair procedures are important for the safety of the service mechanic and the safety and reliability of the motorcycle.**
- **When 2 or more persons work together, pay attention to the safety of each other.**
- **When it is necessary to run the engine indoors, make sure that exhaust gas is forced outdoors.**
- **When working with toxic or flammable materials, make sure that the area you work in is well-ventilated and that you follow all of the material manufacturer's instructions.**
- **Never use gasoline as a cleaning solvent.**
- **To avoid getting burned, do not touch the engine, engine oil, radiator and exhaust system until they have cooled.**
- **After servicing the fuel, oil, water, exhaust or brake systems, check all lines and fittings related to the system for leaks.**

⚠CAUTION

* If parts replacement is necessary, replace the parts with Suzuki Genuine Parts or their equivalent.
* When removing parts that are to be reused, keep them arranged in an orderly manner so that they may be reinstalled in the proper order and orientation.
* Be sure to use special tools when instructed.
* Make sure that all parts used in reassembly are clean. Lubricate them when specified.
* Use the specified lubricant, bond, or sealant.
* When removing the battery, disconnect the negative cable first and then the positive cable. When reconnecting the battery, connect the positive cable first and then the negative cable, and replace the terminal cover on the positive terminal.
* When performing service to electrical parts, if the service procedures not require use of battery power, disconnect the negative cable the battery.
* When tightening the cylinder head and case bolts and nuts, tighten the larger sizes first. Always tighten the bolts and nuts diagonally from the inside working out and to the specified tightening torque.
* Whenever you remove oil seals, gaskets, packing, O-rings, locking washers, self-locking nuts, cotter pins, circlips and certain other parts as specified, be sure to replace them with new ones. Also, before installing these new parts, be sure to remove any left over material from the mating surfaces.
* Never reuse a circlip. When installing a new circlip, take care not to expand the end gap larger than required to slip the circlip over the shaft. After installing a circlip, always ensure that it is completely seated in its groove and securely fitted.
* Use a torque wrench to tighten fasteners to the specified torque. Wipe off grease and oil if a thread is smeared with them.
* After reassembling, check parts for tightness and proper operation.

* To protect the environment, do not unlawfully dispose of used motor oil, engine coolant and other fluids: batteries, and tires.
* To protect Earth's natural resources, properly dispose of used motorcycle and parts.

SUZUKI AN250W ('98-MODEL)

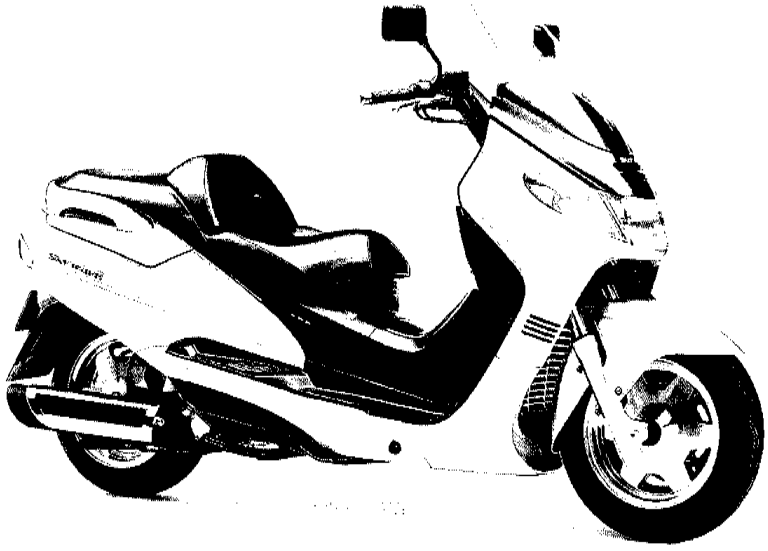

* Difference between photograph and actual motorcycle depends on the markets.

SERIAL NUMBER LOCATION

The frame serial number or V.I.N. (Vehicle Identification Number) ① is stamped on the right side of the frame tube. The engine serial number ② is located on the left side of the crankcase. These numbers are required especially for registering the machine and ordering spare parts.

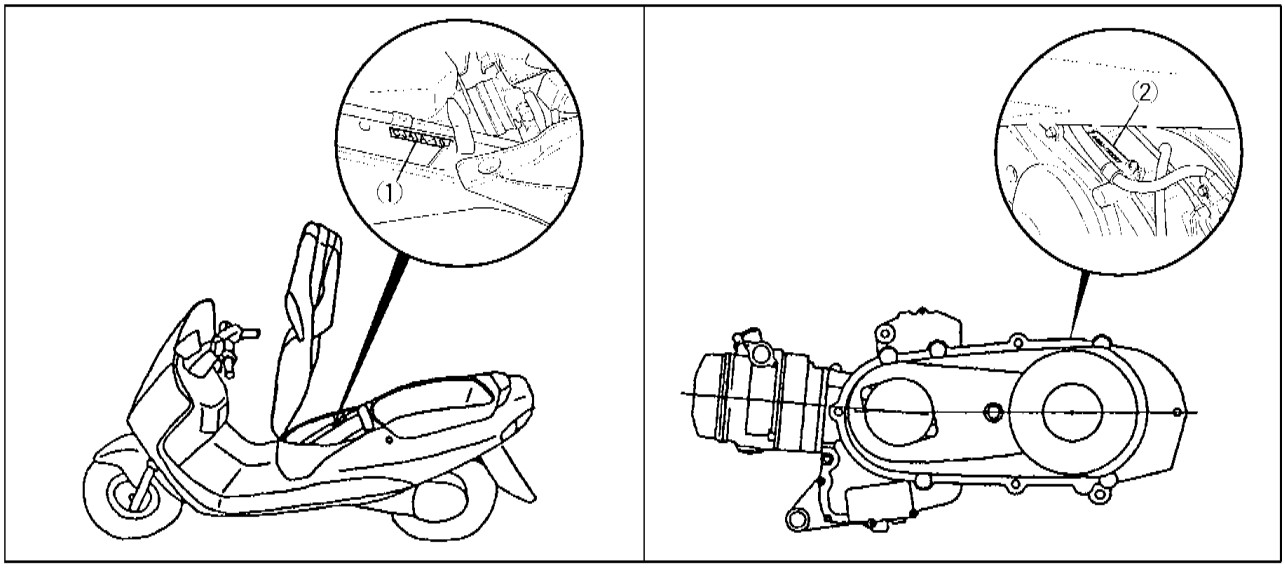

FUEL, OIL AND ENGINE COOLANT RECOMMENDATION

FUEL

Gasoline used should be graded 91 octane (Research Method) or higher. Unleaded gasoline is recommended.

ENGINE OIL

Use a premium quality 4-stroke motor oil to ensure longer service life of your motorcycle. Use only oils which are rated SF or SG under the API service classification.
The recommended viscosity is SAE 10W-40. If an SAE 10W-40 motor oil is not available, select an alternative according to the following chart.

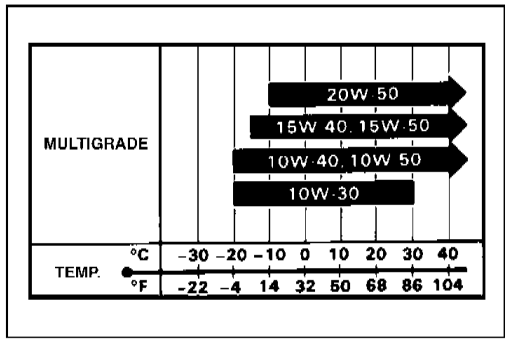

BRAKE FLUID

Specification and classification: DOT 4

⚠WARNING

Since the brake system of this motorcycle is filled with a glycol-based brake fluid by the manufacturer, do not use or mix different types of fluid such as silicone-based and petroleum-based fluid for refilling the system, otherwise serious damage will result.
Do not use any brake fluid taken from old or used or unsealed containers.
Never re-use brake fluid left over from a previous servicing, which has been stored for a long period.

FRONT FORK OIL

Use fork oil #10.

ENGINE COOLANT

Use an anti-freeze/engine coolant compatible with an aluminum radiator, mixed with distilled water only.

WATER FOR MIXING

Use distilled water only. Water other than distilled water can corrode and clog the aluminum radiator.

ANTI-FREEZE/ENGINE COOLANT

The engine coolant perform as a corrosion and rust inhabit as well as anti-freeze. Therefore, the engine coolant should be used at all times even though the atmospheric temperature in your area does not go down to freezing point.

Suzuki recommends the use of SUZUKI GOLDEN CRUISER 1200NA anti-freeze/engine coolant. If this is not available, use an equivalent which is compatible with an aluminum radiator.

LIQUID AMOUNT OF WATER/ENGINE COOLANT

Solution capacity (total): 1500 ml

For engine coolant mixture information, refer to cooling system section, page 5-1.

⚠CAUTION

Mixing of anti-freeze/engine coolant should be limited to 60%. Mixing beyond it would reduce its efficiency. If the anti-freeze/engine coolant mixing ratio is below 50%, rust inhabiting performance is greatly reduced. Be sure to mix it above 50% even though the atmospheric temperature does not go down to the freezing point.

BREAK-IN PROCEDURES

During manufacture only the best possible materials are used and all machined parts are finished to a very high standard but it is still necessary to allow the moving parts to "BREAK-IN" before subjecting the engine to maximum stresses. The future performance and reliability of the engine depends on the care and restraint exercised during its early life. The general rules are as follows.

- Keep to these break-in procedures:

Initial 800 km : Less than 1/2 throttle
Up to 1 600 km : Less than 3/4 throttle

- Upon reaching an odometer reading of 1 600 km you can subject the motorcycle to full throttle operation.
- Do not maintain constant engine speed for an extended time period during any portion of the break-in. Try to vary the throttle position.

INFORMATION LABELS

(1)	Noise label (E-34, 21,53)
(2)	Warning safety label
(3)	Engine starting label
(4)	Screen warning label
(5)	Tire pressure label
(6)	Fuel cauting label (E-02)
(7)	Loading capacity label
(8)	ID plate
(9)	ID label (E-18, 39)

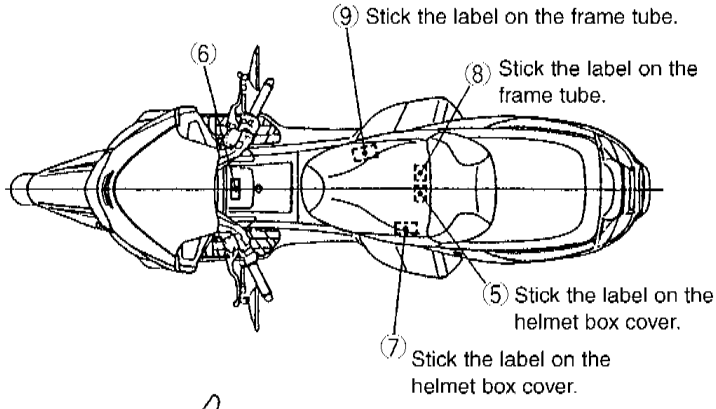

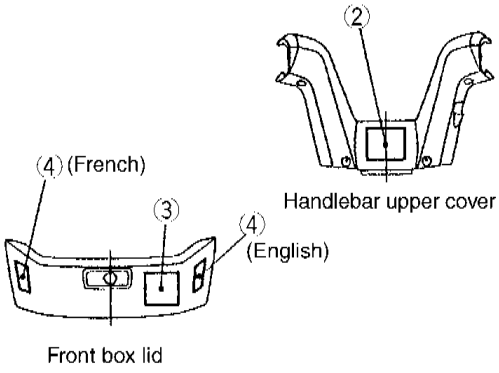

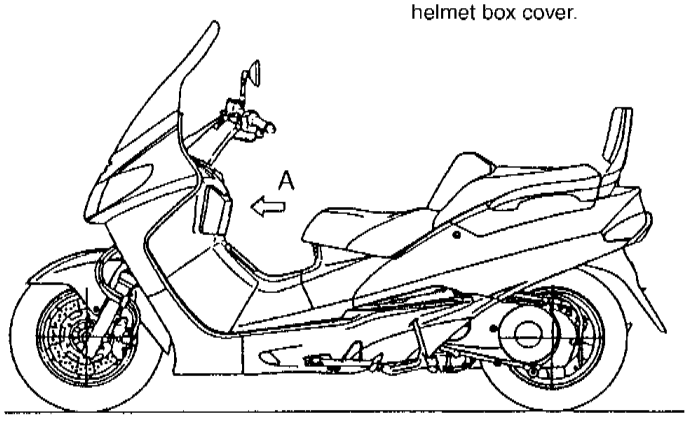

VIEW OF A

SPECIFICATIONS

DIMENSIONS AND DRY MASS

Overall length	2260 mm
Overall width	765 mm
Overall height	1360 mm
Wheelbase	1590 mm
Ground clearnce	125 mm
Dry mass	159 kg

ENGINE

Type	Four-stroke, OHC
Number of cylinders	1
Bore	73.0 mm
Stroke	59.6 mm
Displacement	249 cm^3
Corrected compression ratio	10.5 : 1
Carburetor	KEIHIN CVK30, single
Air cleaner	Plyurethane foam element
Starter system	Electric starter
Lubrication system	Wet sump

TRANSMISSION

Clutch	Dry shoe, automatic, centrifugal type
Reduction ratio	Variable change (2.047-0.805)
Final reduction ratio	8.066 (44/16 × 44/15)
Drive system	V-belt drive

CHASSIS

Front suspension	Telescopic, coil spring, oil damped
Rear suspension	Link type, gas/coil spring, gas/oil damped, spring pre-load 7-way adjustable
Caster	27°
Trail	106 mm
Steering angle	40° (left and right)
Turning radius	2.8 m
Front tire size	110/90-13M/C 55P
Rear tire size	130/70-13M/C 63P
Front brake	Disc brake
Combination brake	Disc brake

ELECTRICAL

Ignition type	Electronic ignition (Transistorized)
Ignition timing	10° B.T.D.C. at 1500 rpm
Spark plug	NGK CR8EK or DENSO U24ETR
Battery	12V 21.6 kC(6 Ah)/10HR
Generator	Three-phase A.C. Generator
Fuse	30/15/15/10/15/10A
Headlight	12V 60/55W (H4)
Position light	12V 5W
Turn signal light	12V 21W × 4
Brake light/taillight	12V 21/5W × 2
Speedometer light	12V 1.7W × 2
High beam indicator light	12V 1.7W
Turn signal indicator light	12V 1.7W × 2
Coolant temperature gauge light	12V 1.7W
Fuel level gauge light	12V 1.7W
Trunk light	12V 2W

CAPACITIES

Fuel tank	13.0 L
Engine oil, oil change	1900 ml
with filter change	2000 ml
Final gear oil	190 ml
Coolant	1500 ml

COUNTRY AND AREA CODES

The following codes stand for the applicable country (-ies) and area (-s).

CODE	COUNTRY or AREA
E-02	U.K.
E-04	France
E-18	Switzerland, Austria (E-39)
E-22	Germany
E-34	Italy, Belgium (E-21), Spain (E-53)

PERIODIC MAINTENANCE

2

CONTENTS

PERIODIC MAINTENANCE SCHEDULE

The chart below lists the recommended intervals for all the required periodic service work necessary to keep the motorcycle operating at peak performance and economy. Mileages are expressed in terms of kilometer, miles and time for your convenience.

NOTE:

More frequent servicing may be performed on motorcycles that are used under severe conditions.

PERIODIC MAINTENANCE CHART

Item \ Interval	km	1000	5000	10000	15000
	months	3	15	30	45
Valve clearance		I	I	I	I
Spark plug		—	I	R	I
Exhaust pipe bolt and muffler bolt		T	T	T	T
Air cleaner element		Clean every 3000 km			
Idle speed (Carburetor)		I	I	I	I
Throttle cable play (Carburetor)		I	I	I	I
Cooling fan filter		Clean every 3000 km			
Radiator hose (Cooling system)		I	—	I	—
		Replace every four years			
Engine coolant (Cooling system)		Replace every two years			
Fuel hose		I	I	I	I
		Replace every four years			
Engine oil		R	R	R	R
Engine oil filter		R	—	R	—
Brake (Brake system)		I	I	I	I
Brake hose (Brake system)		—	I	I	I
		Replace every four years			
Brake fluid (Brake system)		—	I	I	I
		Replace every two years			
Final gear oil		—	—	I	—
Steering		I	—	I	—
Front fork		—	—	I	—
Rear suspension		—	—	I	—
Tire		I	I	I	I
Chassis bolt and nut		T	T	T	T

I=Inspect and adjust, clean, lubricate or replace as necessary

C=Clean R=Replace T=Tighten

LUBRICATION POINTS

Proper lubrication is important for smooth operation and long life of each working part of the motorcycle.

Major lubrication points are indicated below.

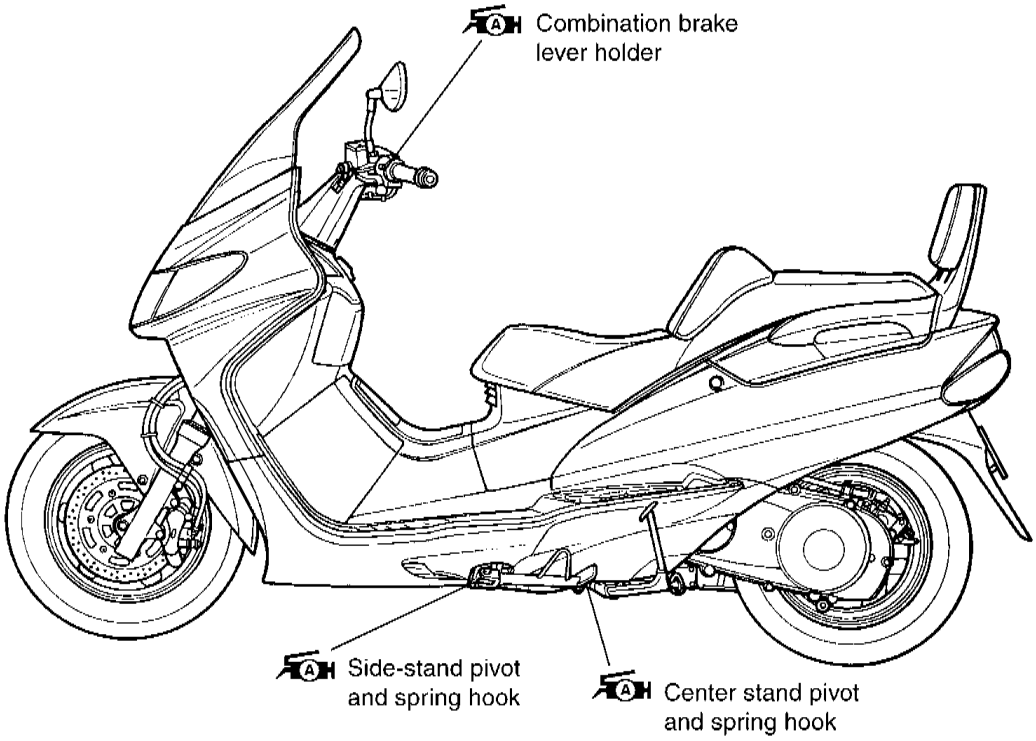

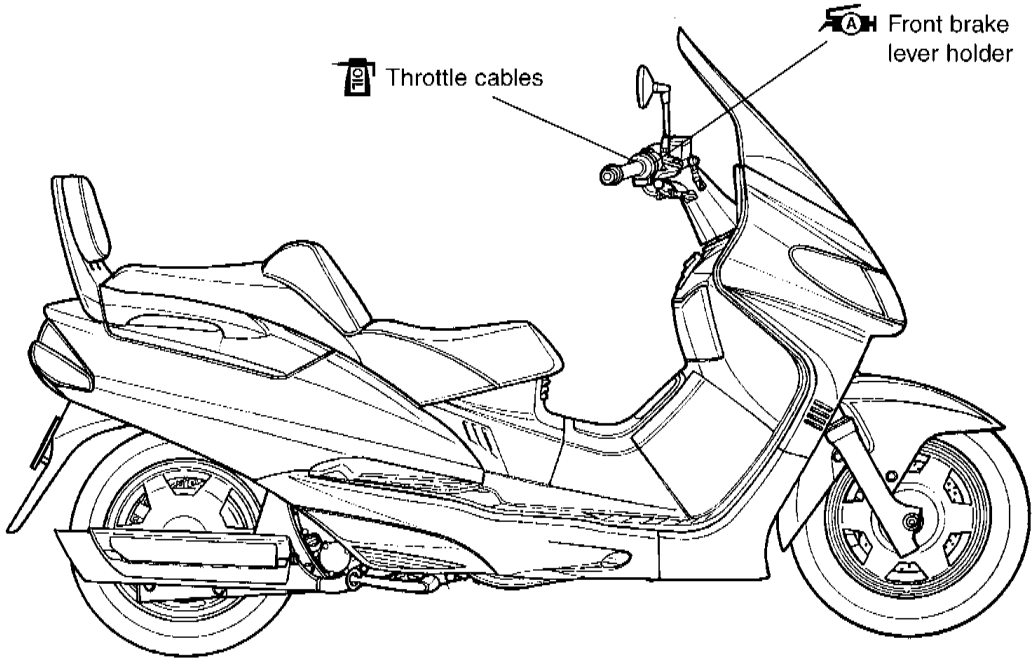

NOTE:

- *Before lubricating each part, clean off any rusty spots and wipe off any grease, oil, dirt or grime.*
- *Lubricate exposed parts which are subject to rust, with a rust preventative spray whenever the motorcycle has been operated under wet or rainy conditions.*

MAINTENANCE AND TUNE-UP PROCEDURES

This section describes the servicing procedures for each item of the Periodic Maintenance requirements.

VALVE CLEARANCE

Inspect Initially at 1000 km (3 months) and Every 5000 km (15 months) thereafter.

- Remove the front frame cover. (See page 6-1.)
- Remove the left side leg shield. (See page 6-1.)
- Remove the front helmet box cover. (See page 6-1.)
- Remove the air cleaner box and carburetor.(See page 3-2.)
- Remove the cooling fan cover. (See page 3-8.)
- Remove the timing inspection plug on the generator stator case.
- Remove the cylinder head cover. (See page 3-7.)

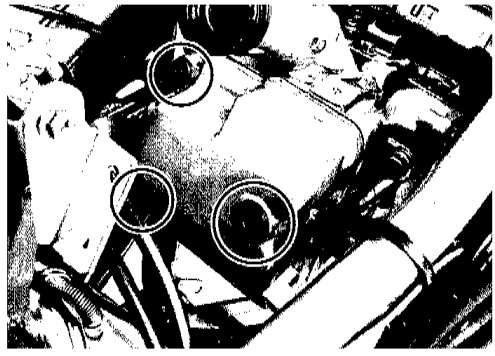

The valve clearance specification is different for intake and exhaust valves.Valve clearance adjustment must be checked and adjusted, 1) at the time of periodic inspection, 2) when the valve mechanism is serviced, and 3) when the camshaft is disturbed by removing it for servicing.

Valve clearance (when cold):

IN.: 0.08-0.13 mm

EX.: 0.17-0.22 mm

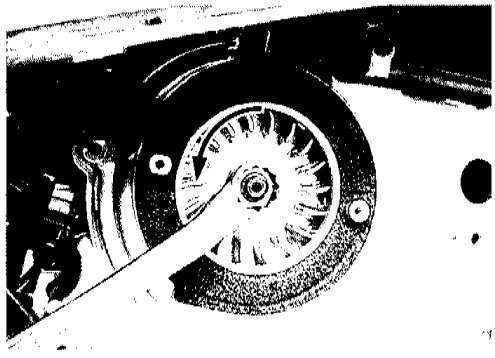

NOTE:

- *The piston must be at (TDC) on the compression stroke in order to check the valve clearance or to adjust valve clearance.*
- *The clearance specification is for COLD state.*
- *To turn the crankshaft for clearance checking, and rotate in the normal running direction. The spark plug should be removed.*

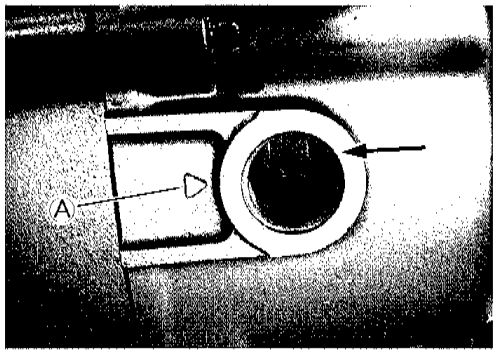

- Turn crankshaft to bring the "TDC" line on the rotor to the index mark Ⓐ on the generator stator case.
- Insert a thickness gauge between the valve stem end and the adjusting screw on the rocker arm.
  If the clearance is out of specification, bring it into the specified range.

TOOL **09900-20803: Thickness gauge**
09917-14910: Valve clearance adjusting driver

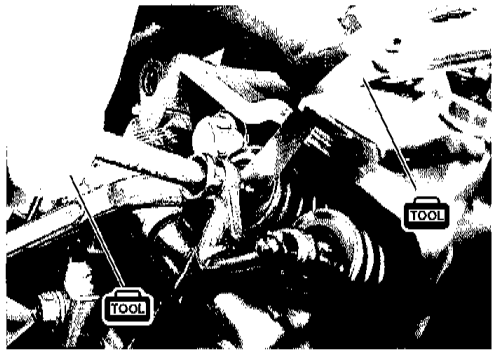

SPARK PLUG

Inspect at 5000 km (15 months) and Replace Every 10000 km (30 months) thereafter.

REMOVAL

- Remove the frame cover. (See page 6-1.)
- Disconnect the spark plug cap.
- Remove the spark plug.

TOOL 09930-10121: Spark plug socket wrench set
09930-14530: Universal joint

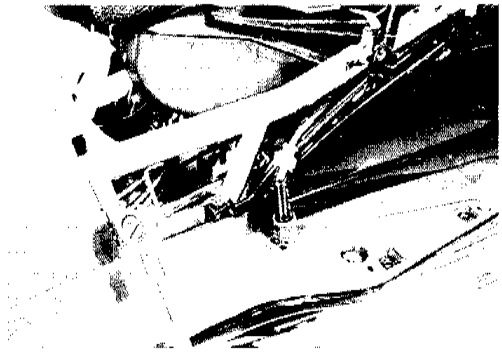

	Standard	Cold type	Hot type
NGK	CR8EK	CR9EK	CR7EK
ND	U24ETR	U27ETR	U22ETR

CARBON DEPOSIT

Check to see the carbon deposit on the plug.
If the carbon is deposited, remove it with a spark plug cleaner machine or carefully using a tool with a pointed end.

SPARK PLUG GAP

Measure the plug gap with a thickness gauge if it is correct. If not, adjust it to the following gap.

Standard

Spark plug gap: 0.6-0.7 mm

TOOL 09900-20803: Thickness gauge

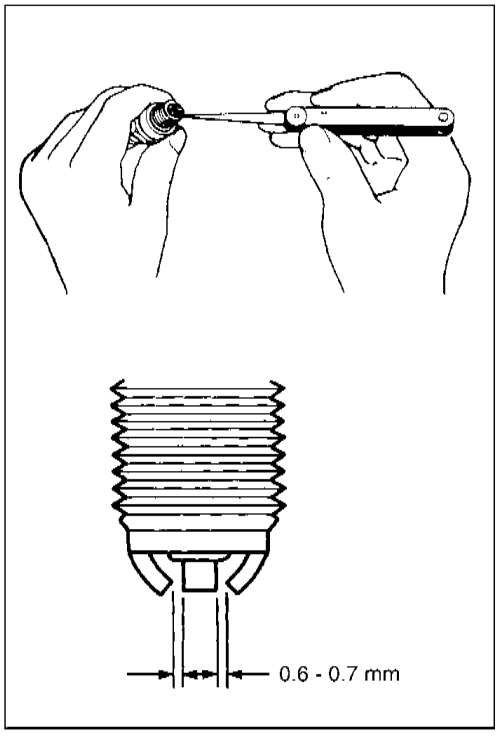

ELECTRODE'S CONDITION

Check to see the worn or burnt condition of the electrodes. If it is extremely worn or burnt, replace the plug. And also replace the plug if it has a broken insulator, damaged thread, etc.

⚠CAUTION

Confirm the thread size and reach when replacing the plug. If the reach is too short, carbon will be deposited on the screw portion of the plug hole and engine damage may result.

INSTALLATION

⚠CAUTION

Before using a spark plug wrench, carefeuuly turn the spark plug by finger into the threads of the cylinder head to prevent damage the aluminum threads.

- Install the spark plug to the cylinder head by finger tight, and then tighten it to the specified torque.

Spark plug: 11 N · m (1.1 kg-m)

EXHAUST PIPE BOLT AND MUFFLER BOLT

Tighten Initially at 1000 km (3 months) and Every 5000 km (15 months) thereafter.

- Remove the right side leg shield (see page 6-1.)
- Tighten the exhaust pipe bolts①, exhaust pipe joint bolts ② and muffler mounting bolts ③ to the specified torque with a torque wrench.

Exhaust pipe bolt, Exhaust pipe joint bolt & Muffler mounting bolt: 23 N · m (2.3 kg-m)

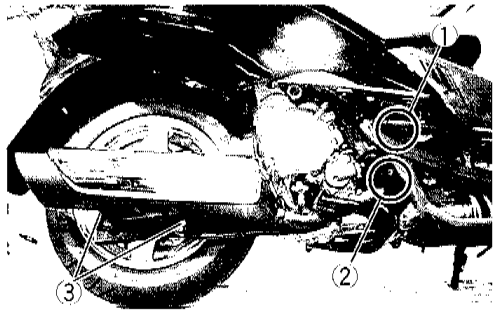

AIR CLEANER

Clean Every 3000 km.

- Remove the front helmet box cover (See page 6-1.)
- Remove the air cleaner cover ①.
- Remove the air cleaner element ② and its retainer ③.

NOTE:

- *When installing the air cleaner element, the letter mark on the element should be positioned outside.*
- *When installing the air cleaner element retainer ③, the long side Ⓐ of the retainer flange should be positioned forward.*

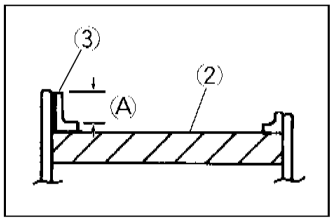

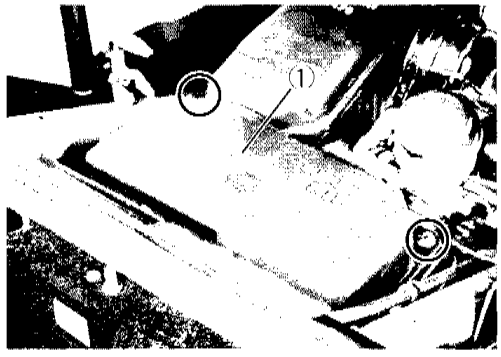

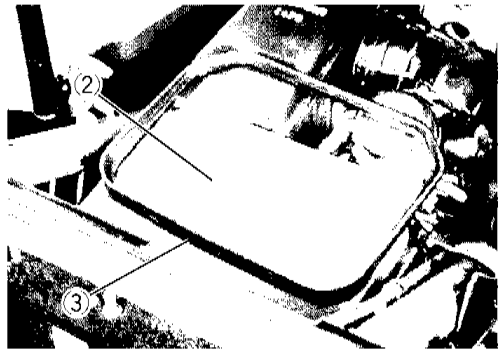

- Fill a washing pan of a proper size with a non-flammable cleaning solvent. Immerse the element in the cleaning solvent and wash it.
- Gently squeeze the element to remove the excess solvent: do not twist or wring the element or it will develop tears.
- Immerse the element in motor oil and squeeze out the excess oil. The element should be wet but not dripping.
- Reinstall the cleaned or new air cleaner element in the reverse order of removal.

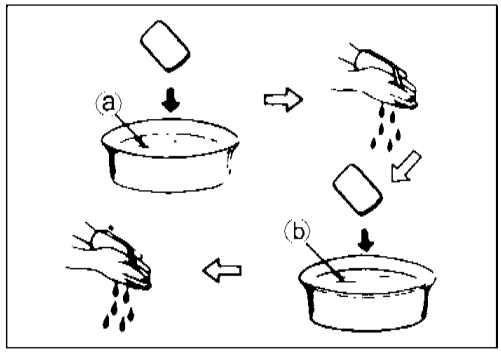

ⓐ Non-flammable cleaning solvent
ⓑ Motor oil SAE #30 or SAE 10W/40

⚠CAUTION

- **Inspect the air cleaner element for tears. A torn element must be replaced.**
- **If driving under dusty conditions, clean the air cleaner element more frequently. The surest way to accelerate engine wear is to use the engine without the element or to use a torn element. Make sure that the air cleaner is in good condition at all times. Life of the engine depends largely on this component!**

CARBURETOR

Inspect Initially at 1000 km (3 months) and Every 5000 km (15 months) thereafter.

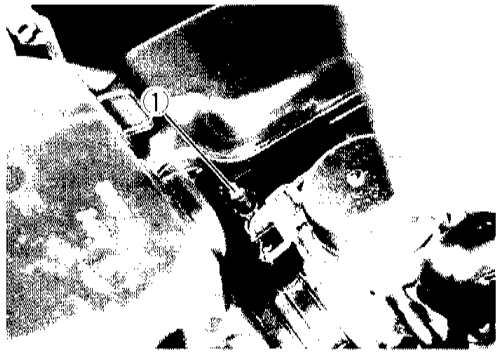

IDLE RPM (Idling adjustment)

NOTE:

Make this adjustment when the engine is hot.

- Remove the front helmet box cover. (See page 6-1.)
- Connect an electric tachometer.
- Start up the engine and set its speed at anywhere between 1400 and 1600 r/min by turning throttle stop screw ①.

Engine idle speed:

1500 ± 50 r/min ... For E-18

1500 ± 100 r/min ... For the others

TOOL 09900-26006: Tachometer

THROTTLE CABLE PLAY

Adjust the throttle cable play Ⓐ with the following three steps.

First step:

- Loosen the lock nut ③ of the throttle returning cable ① and turn in the adjuster ④ fully into the threads.

Second step:

- Loosen the lock nut ⑤ of the throttle pulling cable ②.
- Turn the adjuster ⑥ in or out until the throttle cable play Ⓐ should be 2.0 - 4.0 mm at the throttle grip.
- Tighten the lock nut ⑤ while holding the adjuster ⑥.

Third step:

- While holding the throttle grip at the fully closed position, slowly turn out the adjuster ④ of the throttle returning cable ① to feel resistance.
- Tighten the lock nut ③ while holding the adjuster ④.

Throttle cable play Ⓐ: 2.0 - 4.0 mm

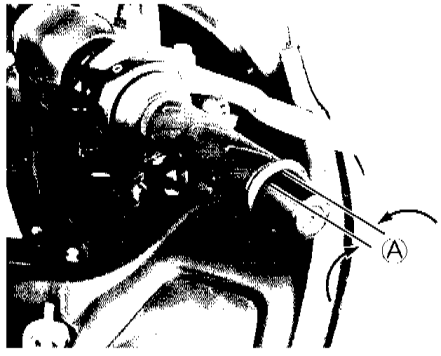

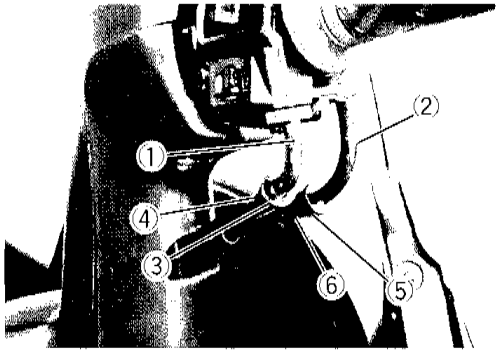

⚠ WARNING

After the adjustment is completed, check that handlebar movement does not raise the engine idle speed and that the throttle grip returns smoothly and automatically.

NOTE:

Major adjustment can be made by the carburetor side adjuster.

COOLING FAN FILTER

Clean Every 3000 km.

- Remove the front frame cover. (See page 6-1.)
- Remove the left side leg shield. (See page 6-1.)
- Remove the cooling fan cover. (See page 3-8.)
- Remove the cooling fan filter ①.
- Cleane the fan filter in the same manner of the air cleaner element. (See page 2-5.)
- Reirstall the cleaned or new filter in the reverse order of removal.

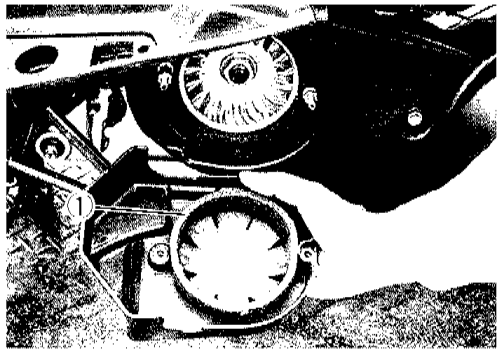

COOLING SYSTEM

(RADIATOR HOSE)
Inspect Initially at 1000 km (3 months) and Every 10000 km (30 months) thereafter.
Replace radiator hoses Every 4 years.

(ENGINE COOLANT)
Replace engine coolant Every 2 years.

RADIATOR HOSES

Check to see the radiator hoses for crack, damage or engine coolant leakage.
If any defects are found, replace the radiator hoses with new ones.

ENGINE COOLANT LEVEL CHECK

- Keep the motorcycle upright.
- Remove the service lid ①.
- Check the engine coolant level by observing the full and lower lines on the engine coolant reserve tank.
  Ⓕ Full line Ⓛ Lower line
- If the level is below the lower line, remove the filler cap② and add engine coolant to the full line from the engine coolant reserve tank filler.

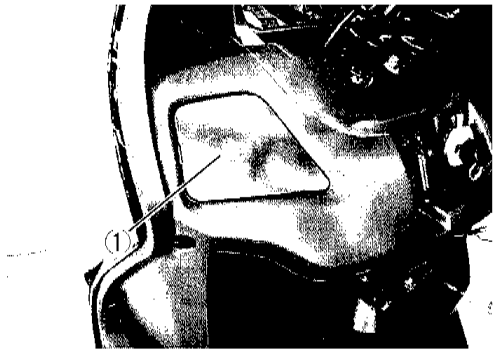

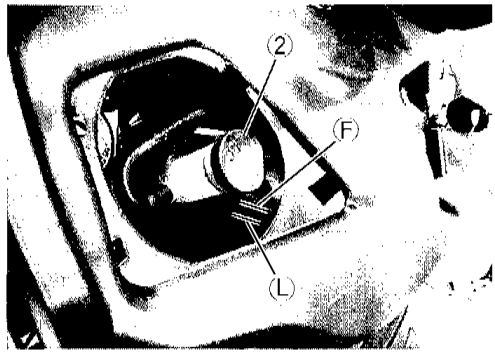

– Continued on next page –

ENGINE COOLANT CHANGE

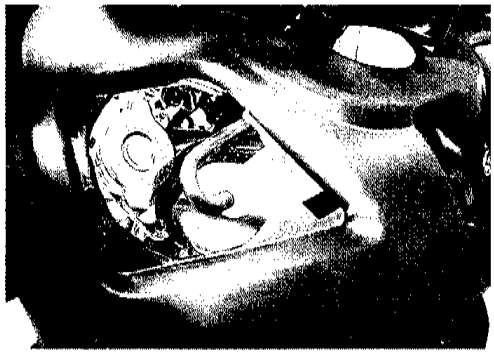

- Remove the rear leg shield and frame covers. (See page 6-1.)
- Remove the radiator cap.
- Drain engine coolant by disconnecting the water hoses ①, ② and ③.

⚠WARNING

> * **Do not open the radiator cap when the engine is hot, as you may be injured by escaping hot liquid or vapor.**
> * **Engine coolant may be harmful if swallowed or if it comes in contact with skin or eyes. If engine coolant gets into the eyes or in contact with the skin, flush thoroughly with plenty of water. If swallowed, induce vomiting and call physician immediately!**

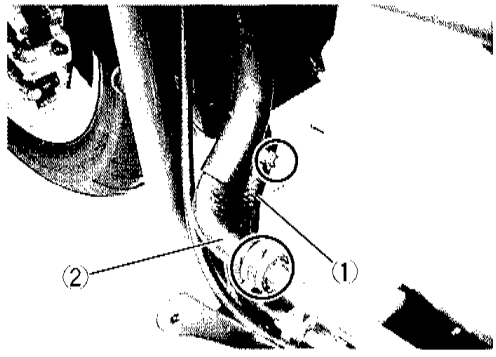

- Flush the radiator with fresh water if necessary.
- Pour the specified engine coolant up to the radiator inlet.
- Bleed the air from the engine coolant circuit as following procedure.

NOTE:

For engine coolant information, refer to page 5-1.

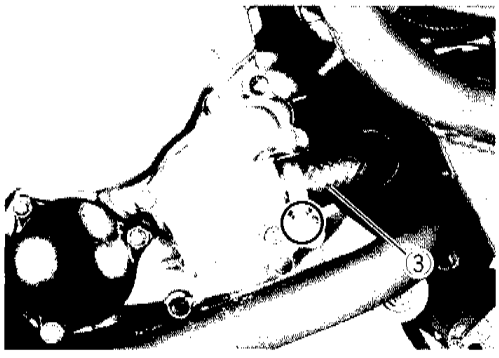

AIR BLEEDING THE ENGINE COOLANT CIRCUIT

- Bleed air from the air bleeder bolt ④.
- Tighten the air bleeder bolt ④ to the specified torque.

Air bleeder bolt: 10 N · m (1.0 kg-m)

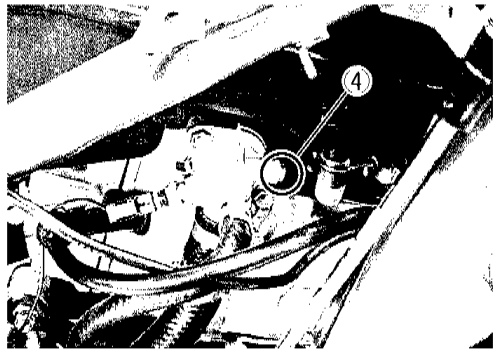

- Add engine coolant up to the radiator inlet.
- Slowly swing the motorcycle, right and left, to bleed the air trapped.
- Add engine coolant up to the radiator inlet.
- Start up the engine and bleed air from the radiator inlet completely.
- Add engine coolant up to the radiator inlet.
- Repeat the above procedure until bleed no air from the radiator inlet.
- Close the radiator cap securely.
- After warming up and cooling down the engine several times, add the engine coolant up to the full level of the reserve tank.

⚠CAUTION

> **Repeat the above procedure several times and make sure that the radiator is filled with engine coolant up to the reserve tank full level.**

LLC Engine coolant capacity: 1 500 ml

FUEL HOSE

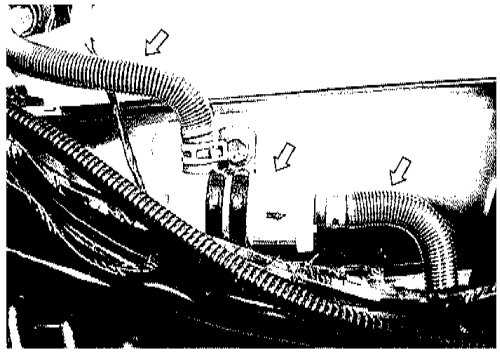

Inspect Initially at 1000 km (3 months) and Every 5000 km (15 months) thereafter.
Replace Every 4 years.

Inspect the fuel hoses for damage and fuel leakage. If any defects are found, the fuel hoses must be replaced.

FUEL FILTER

Visually check the fuel filter. If accumulation of sediment or clogging is found, replace the fuel filter with a new one.

ENGINE OIL AND OIL FILTER

(ENGINE OIL)
Replace Initially at 1000 km (3 months) and Every 5000 km (15 months) thereafter.

(OIL FILTER)
Replace Initially at 1000 km (3 months) and Every 10000 km (30 months) thereafter.

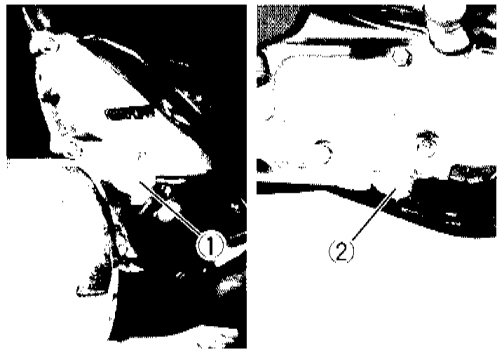

Oil should be changed while the engine is warm. Oil filter replacement at the above intervals, should be done together with the engine oil change.

- Keep the motorcycle upright.
- Place an oil pan below the engine, and drain the oil by removing the filler cap ① and drain plug ②.

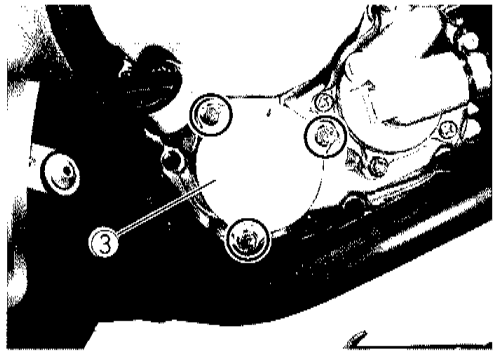

- Remove the oil filter cap ③.
- Remove the oil filter.

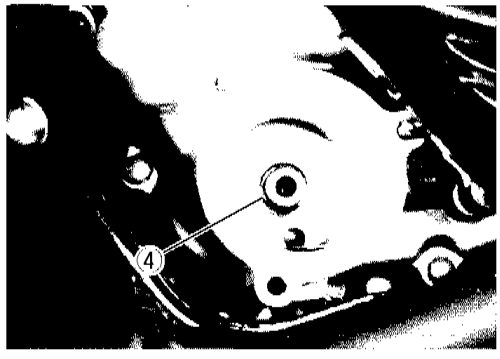

- Install the new O-ring ④ and new oil filter.

– *Continued on next page* –

- Install the new O-ring ⑤ and spring ⑥ to the oil filter cap.

NOTE:

- *Before installing the oilfilter cap, apply engine oil lightly to the new O-ring ⑤.*
- *The arrow mark on the oil filter cap should be positioned topward.*

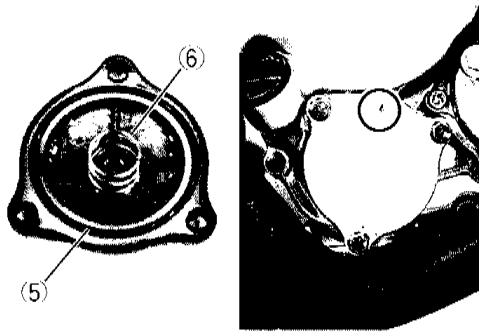

- Place the motorcycle on the side-stand.
- Fit the drain plug②securely, and pour fresh oil through the oil filler. The engine will hold about 2000 ml of oil. Use an API classification of SF or SG oil with SAE 10W/40 viscosity.

Drain plug: 23 N · m (2.3 kg-m)

- Install the filler cap ①.
- Place the motorcycle on the center stand.
- Start up the engine and allow it to run for several minutes at idling speed.
- Turn off the engine and wait about one minute, then check the oil level by removing the filler cap ①. If the level is below mark "L", add oil to "F" level.

If the level is above mark "F", drain oil to "F" level.

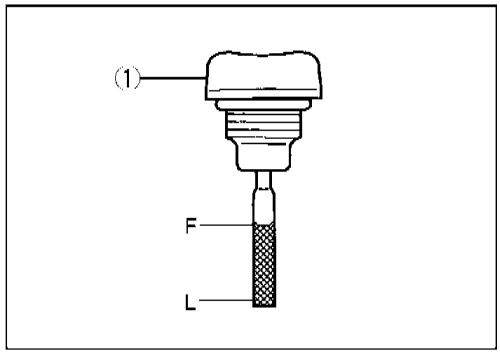

NECESSARY AMOUNT OF ENGINE OIL

Oil change	**: 1900 ml**
Filter change	**: 2000 ml**
Overhaul engine	**: 2300 ml**

BRAKE SYSTEM

(BRAKE)
Inspect Initially at 1000 km (3 months) and Every 5000 km (15 months) thereafter.

(BRAKE HOSE AND BRAKE FLUID)
Inspect Every 5000 km (15 months). Replace hoses Every 4 years. Replace fluid Every 2 years.

BRAKE FLUID LEVEL CHECK

- Keep the motorcycle upright and place the handlebars straight.
- Check the brake fluid level by observing the lower limit lines on the front and combination brake fluid reservoirs.
- When the level is below the lower limit line, replenish with brake fluid that meets the following specification.

Specification and Classification: DOT 4

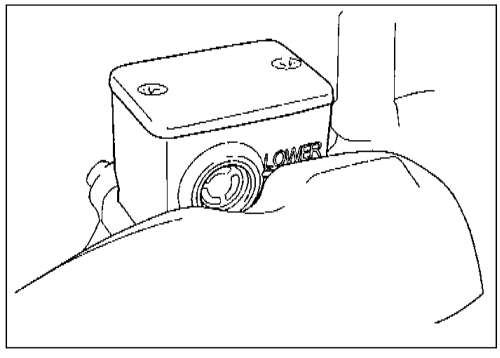

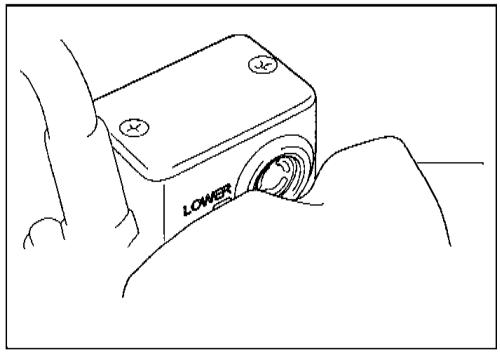

⚠WARNING

The brake system of this motorcycle is filled with a glycol-based brake fluid. Do not use or mix different types of fluid such as silicone-based or petroleum-based. Do not use any brake fluid taken from old, used or unsealed containers. Never reuse brake fluid left over from the last servicing or stored for a long period.

⚠WARNING

Brake fluid, if it leaks, will interfere with safe running and immediately discolor painted surfaces. Check the brake hoses and hose joints for cracks and oil leakage before riding.

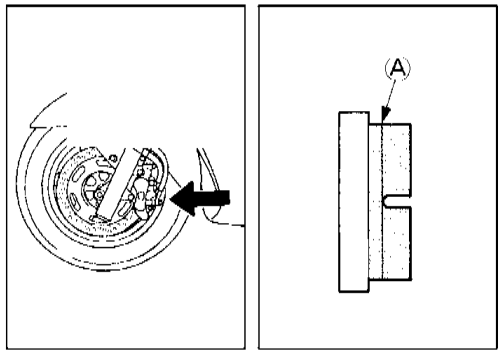

BRAKE PAD WEAR

The extent of brake pad wear can be checked by observing the grooved limit Ⓐ on the pad. When the wear exceeds the grooved limit, replace the pads with new ones.

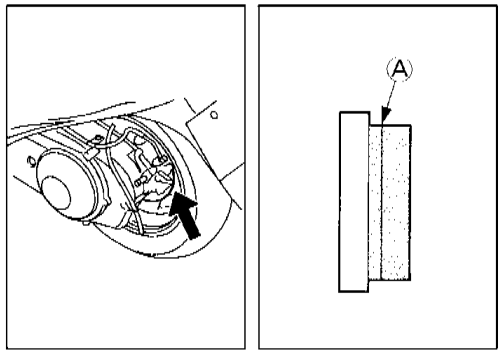

⚠CAUTION

Replace the brake pad as a set, otherwise braking performance will be adversely affected.

FRONT BRAKE PAD REPLACEMENT

- Remove the brake pad mounting pins ① and ②.
- Remove the brake pads.

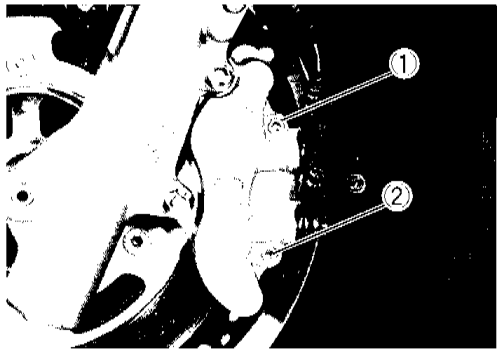

REAR BRAKE PAD REPLACEMENT

- Remove the rear wheel. (See page 6-43).
- Remove the brake pads. (See page 6-45.)

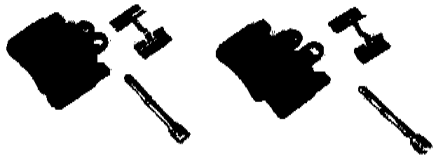

– Continued on next page –

FRONT BRAKE FLUID REPLACEMENT

- Place the motorcycle on a level surface and keep the handlebar straight.
- Remove the master cylinder reservoir cap and diaphragm.
- Suck up the old brake fluid as much as possible.
- Fill the reservoir with new brake fluid.

Specification and classification: DOT4

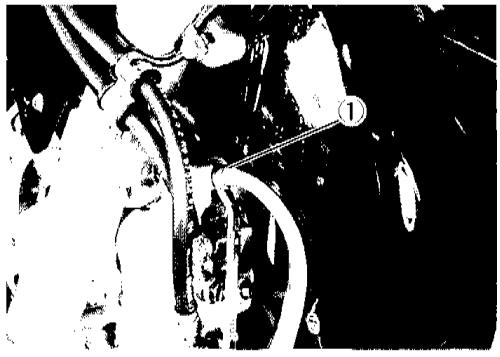

- Connect a clear hose①to the air bleeder velve and insert the other end of the hose into a receptacle.
- Loosen the air bleeder valve and pump the brake lever until the old brake fluid is completely out of the brake system.
- Close the air bleeder valve and disconnect the clear hose. Fill the reservoir with new brake fluid to the upper end of the inspection window.

Air bleeder valve: 7.5 N·m (0.75 kg-m)

COMBINATION BRAKE FLUID REPLACEMENT

- Place the motorcycle on a level surface and keep the handlebar straight.
- Remove the master cylinder reservoir cap and diaphragm.
- Suck up the old brake fluid as much as possible.
- Fill the reservoir with new brake fluid.

Specification and classification: DOT4

- Connect a clear hose①to the air bleeder valve and insert the other end of the hose into a receptacle.
- Loosen the air bleeder valve and pump the brake lever until the old brake fluid is completely out of the brake system.
- Close the air bleeder valve and disconnect the clear hose. Fill the reservoir with new brake fluid to the upper end of the inspection window.
- Next, connect a clear hose ② to the air bleeder valve on the rear brake caliper. The rear brake fluid replacement is the same way as that of the front one.

– *Continued on next page* –

AIR BLEEDING THE BRAKE FLUID CIRCUIT

Air trapped in the fluid circuit acts like a cushion to absorb a large proportion of the pressure developed by the master cylinder and thus interferes with the full braking performance of the brake caliper. The presence of air is indicated by "sponginess" of the brake lever and also by lack of braking force. Considering the danger to which such trapped air exposes the machine and rider, it is essential that, after remounting the brake and restoring the brake system to the normal condition, the brake fluid circuit be purged of air in the following manner:

- Fill up the master cylinder reservoir to the "UPPER" line. Place the reservoir cap to prevent entry of dirt.
- Connect a clear hose ① to the air bleeder valve, and insert the free end of the pipe into a receptacle.

Air bleeder valve: 7.5 N · m (0.75 kg-m, 5.5 lb-ft)

- Front brake: Bleed the air from the air bleeder valve.
- Squeeze and release the brake lever several times in rapid succession and squeeze the lever fully without releasing it. Loosen the bleeder valve by turning it a quarter of a turn so that the brake fluid runs into the receptacle; this will remove the tension of the brake lever causing it to touch the handlebar grip. Then, close the valve, pump and squeeze the lever, and open the valve. Repeat this process until the fluid flowing into the receptacle no longer contains air bubbles.

NOTE:

Replenish the brake fluid in the reservoir as necessary while bleeding the brake system. Make ure that there is always some fluid visible in the reservoir.

- Close the bleeder valve, and disconnect the clear hose. Fill the reservoir with brake fluid to the "UPPER" line.

▲CAUTION

Handle brake fluid with care: the fluid reacts chemically with paint, plastics, rubber materials and so on.

AIR BLEEDING FOR THE COMBINATION BRAKE

The combination brake system air bleeding is the same manner as that of the front brake one.

- Bleed the air from the rear side first and then the front side.

① Clear hose for rear brake

② Clear hose for front brake

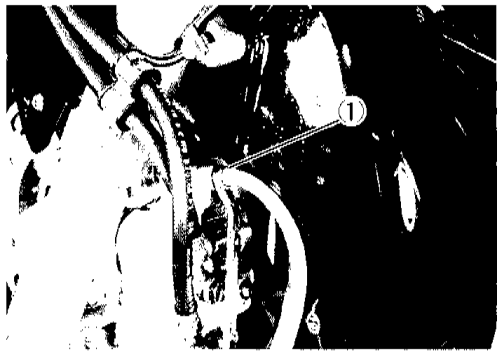

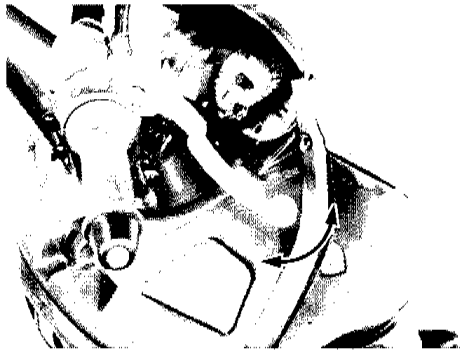

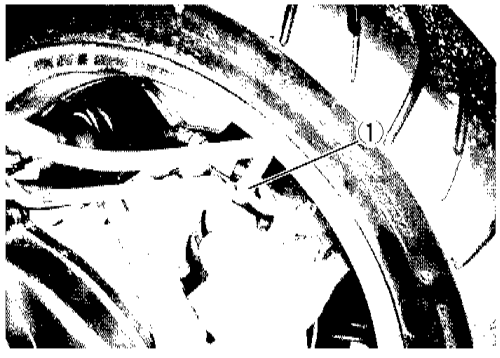

FINAL GEAR OIL

Inspect Every 10000 km (30 months) thereafter.

- Keep the motorcycle upright.
- Remove the left side leg shield. (See page 6-1.)
- Remove the clutch cover ①. (See page 3-13.)
- Place an oil pan below the mission case.
- Remove the oil level plug ② and inspect the oil level. If the level is below the level hole, add oil until oil flows from the level hole.

Oil viscosity and classification
: SAE 10W/40 with SF or SG

- Tighten the oil level plug ② to the specified torque.

Oil level plug: 12 N·m (1.2 kg-m)

NOTE:
If oil is dirty with sludge or used for a long period, drain the oil by removing the drain plug ③ and pour fresh oil through the oil level hole.

Drain plug: 12 N·m (1.2 kg-m)

NECESSARY AMOUNT OF FINAL GEAR OIL
Oil change: 190 ml
Overhaul : 200 ml

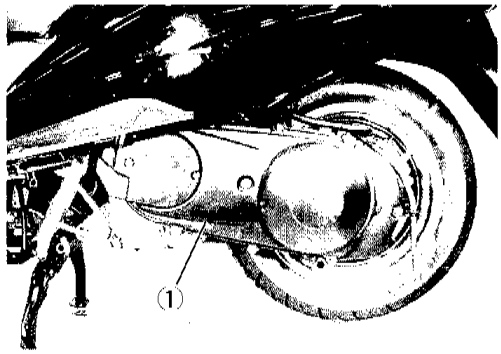

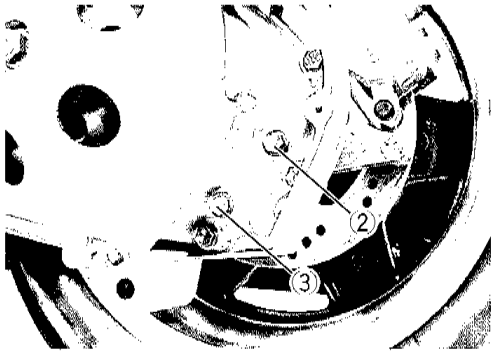

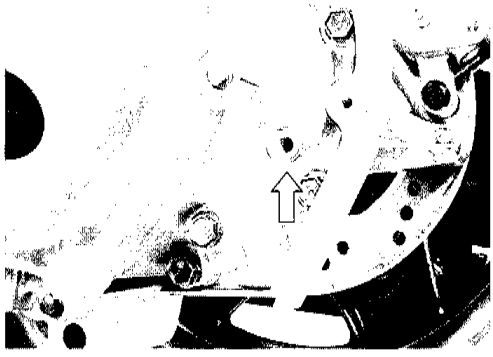

STEERING

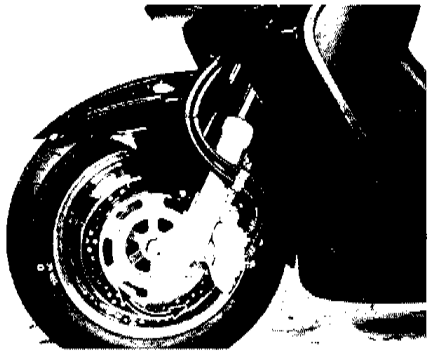

Inspect Initially at 1000 km (3 months) and Every 10000 km (30 months) thereafter.

Steering should be adjusted properly for smooth turning of handlebars and safe running. Overtight steering prevents smooth turning of the handlebars and too loose steering will cause poor stability. Check that there is no play in the steering stem while grasping the lower fork tubes by supporting the machine so that the front wheel is off the ground, with the wheel straight ahead, and pull forward. If play is found, perform steering bearing adjustment as described in page 6-42 of this manual.

FRONT FORK

Inspect Every 10000 km (30 months).

Inspect the front forks for oil leakage, scoring or scratches on the outer surface of the inner tubes. Replace any defective parts, if necessary. (Refer to pages 6-31 to -38.)

REAR SUSPENSION

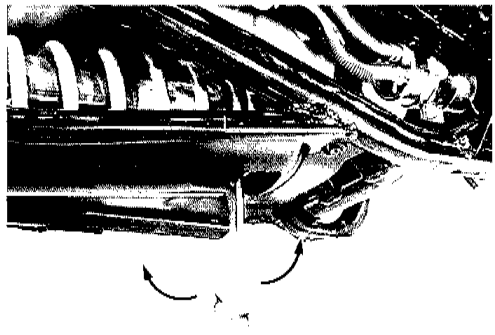

Inspect Every 10000 km (30 months).

Inspect the rear shock absorber for oil leakage and mounting rubbers including engine mounting for wear and damage. Replace any defective parts, if necessary.

REAR SHOCK ABSORBER ADJUSTMENT

- Keep the motorcycle upright.
- Remove the service lid.
- Adjust the spring pre-load with the tool.

STD: 3rd position

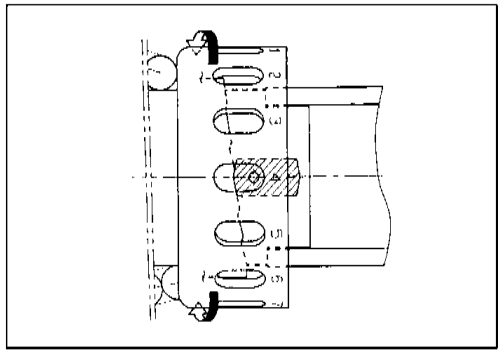

TIRE

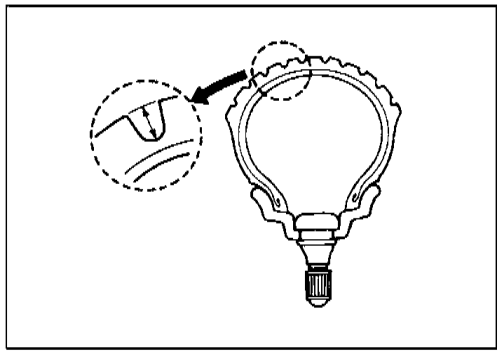

Inspect Initially at 1000 km (3 months) and Every 5000 km (15 months) thereafter.

TIRE TREAD CONDITION

Operating the motorcycle with excessively worn tires will decrease riding stability and consequently invite a dangerous situation. It is highly recommended to replace a tire when the remaining depth of tire tread reaches the following specification.

TOOL 09900-20805: Tire depth gauge

Service Limit

Tire tread depth (FRONT): 1.6 mm

(REAR) : 2.0 mm

TIRE PRESSURE

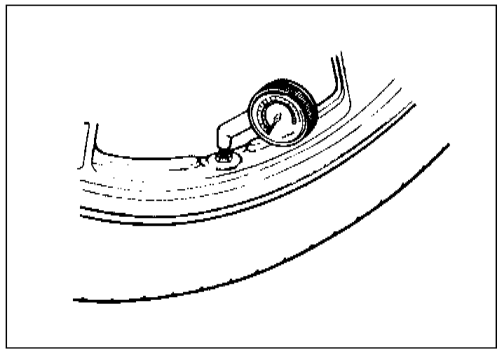

If the tire pressure is too higt or too low, steering will be adversely affected and tire wear increased. Therefore, maintain the correct tire pressure for good roadability or shorter tire life will result. Cold inflation tire pressure is as follows.

COLD INFLATION TIRE PRESSURE	SOLD RIDING		DUAL RIDING	
	kPa	kgf/cm²	kPa	kgf/cm²
FRONT	175	1.75	175	1.75
REAR	200	2.00	280	2.80

⚠CAUTION

The standard tire fitted on this motorcycle is 110/90-13M/C 55P for front and 130/70-13M/C 63P for rear. The use of tires other than those specified may cause instability. It is highly recommended to use a SUZUKI Genuine Tire.

TIRE TYPE

BRIDGESTONE (front ... HOOP B03, rear ... HOOP B02)

CHASSIS BOLT AND NUT

Tighten Initially at 1000 km (3 months) and Every 5000 km (15 months) thereafter.

Check that all chassis bolts and nuts are tightened to their specified torque. (Refer to pages 2-17 and 18 for the locations of the following nuts and bolts on the motorcycle.)

No.	Item	N · m	kg-m
①	Front axle	65	6.5
②	Axle pinch bolt	23	2.3
③	Steering stem lock nut	30	3.0
④	Handlebar holder clamp bolt	23	2.3
⑤	Handlebar set bolt	10	1.0
⑥	Handlebar clamp bolt	23	2.3
⑦	Front fork cap bolt	45	4.5
⑧	Front fork clamp bolt	23	2.3
⑨	Brake master cylinder bolt	10	1.0
⑩	Brake hose union bolt	23	2.3
⑪	Brake caliper mounting bolt	25	2.5
⑫	Brake air bleeder valve	7.5	0.75
⑬	Brake disc bolt	23	2.3
⑭	Rear axle nut	100	10.0
⑮	Rear shock absorber bolt	50	5.0
⑯	Cushion lever mounting nut	78	7.8
⑰	Cushion lever nut	50	5.0
⑱	Cushion rod nut	50	5.0

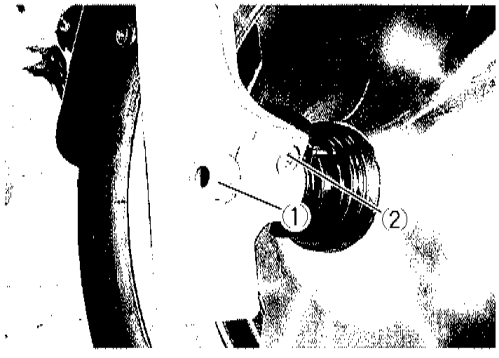

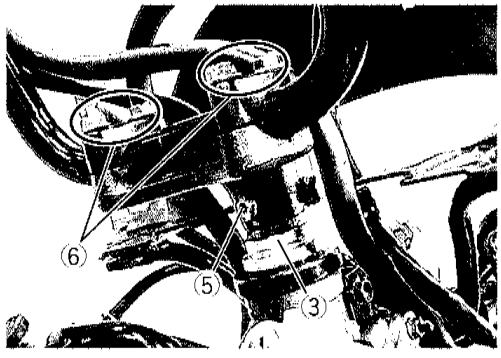

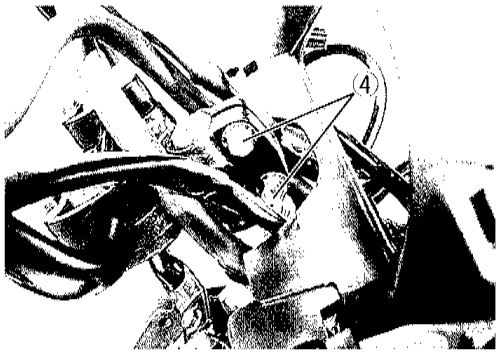
4

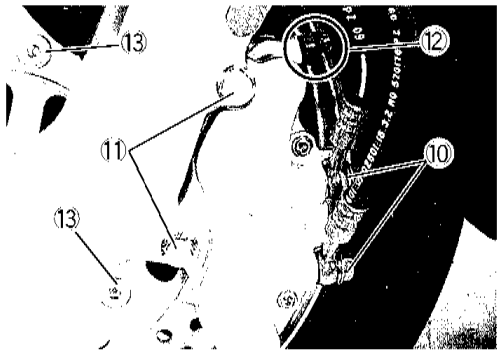
13
12
11
10
13

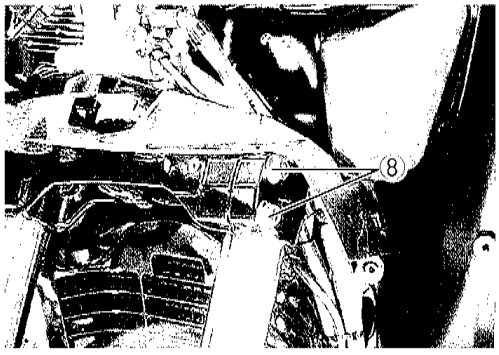
8

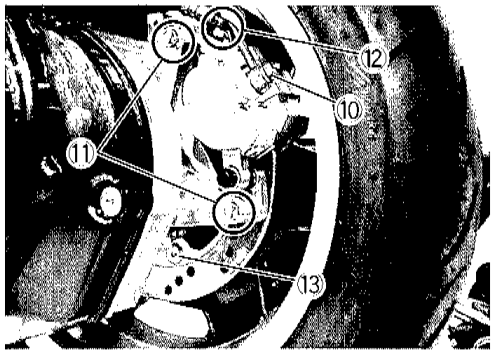
12
10
11
13

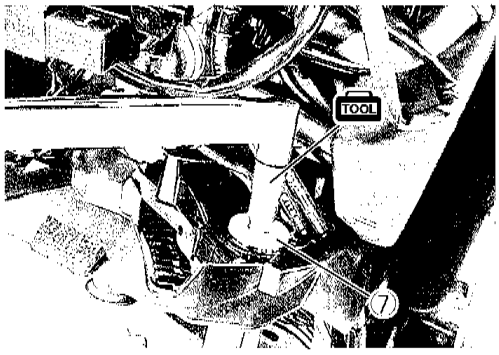
TOOL
7

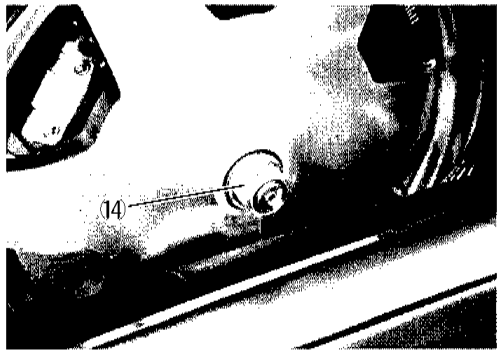
14

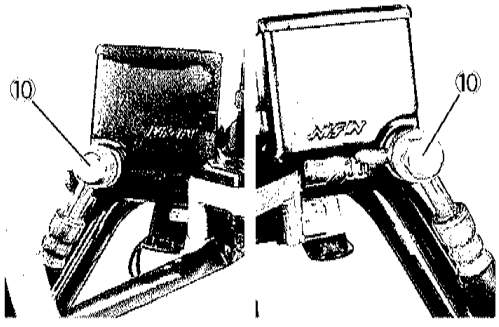
10
10

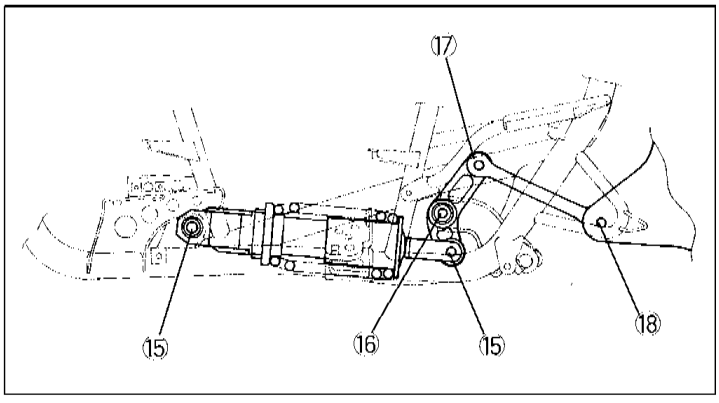
17
15
16
15
18

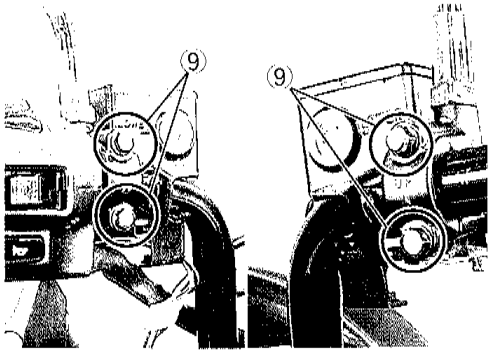
9
9

COMPRESSION PRESSURE CHECK

The compression of a cylinder is a good indicator of its internal condition.
The decision to overhaul the cylinder is often based on the results of a compression test. Periodic maintenance records kept at your dealership should include compression readings for each maintenance service.

COMPRESSION PRESSURE SPECIFICATION

Standard	Limit
1480 kPa (14.8 kg/cm²)	1030 kPa (10.3 kg/cm²)

Low compression pressure can indicate any of the following conditions:

* Excessively worn cylinder wall
* Worn-down piston or piston rings
* Piston rings stuck in grooves
* Poor seating of valves
* Ruptured or otherwise defective cylinder head gasket

COMPRESSION TEST PROCEDURE

NOTE:

* *Before testing the engine for compression pressure, make sure that the cylinder head bolts are tightened to the specified torque values and valves are properly adjusted.*
* *Have the engine warmed up by idling before testing.*
* *Be sure that the battery used is in fully-charged condition.*

Remove the parts concerned and test the compression pressure in the following manner.

- Support the motorcycle with the center stand.
- Remove the frame cover. (See page 6-1.)
- Remove the spark plug.
- Fit the compression gauge in the plug hole, while taking care that the connection tight.
- Keep the throttle grip in full-open position.
- While cranking the engine a few seconds with the starter, and record the maximum gauge reading as the compression of that cylinder.

TOOL **09915-64510: Compression gauge**
09915-63310: Adaptor

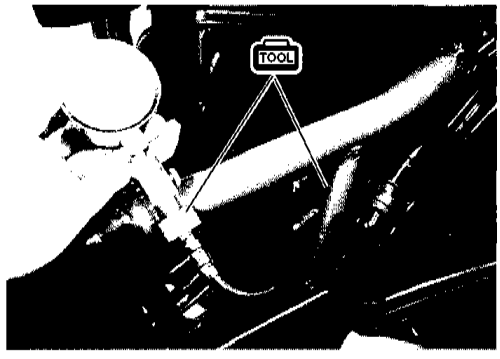

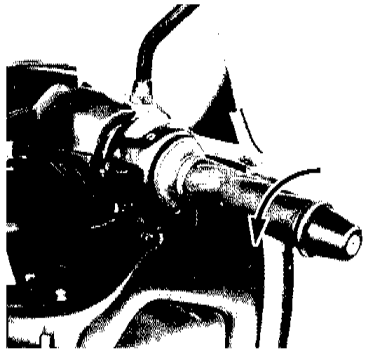

OIL PRESSURE CHECK

Check the oil pressure periodically. This will give a good indication of the condition of the moving parts.

OIL PRESSURE SPECIFICATION

Above 80 kPa (0.8 kg/cm²) **Below 160 kPa (1.6 kg/cm²)**	**at 3000 r/min., Oil temp. at 60℃ (140° F)**

If the oil pressure is lower or higher than the specification, the following causes may be considered.

LOW OIL PRESSURE

* Clogged oil filter
* Oil leakage from the oil passage
* Damaged O-ring
* Defective oil pump
* Combination of above items

HIGH OIL PRESSURE

* Engine oil viscosity is too high
* Clogged oil passage
* Combination of the above items

OIL PRESSURE TEST PROCEDURE

Check the oil pressure in the following manner.

- Support the motorcycle with the center stand.
- Remove the main gallery plug ①.
- Install the oil pressure gauge with adaptor in the position shown in the figure.
- Connect an electric tachometer.
- Warm up the engine as follows:
  Summer 10 min. at 2000 r/min.
  Winter 20 min. at 2000 r/min.
- After warming up, increase the engine speed to 3000 r/min. (with the electric tachometer), and read the oil pressure gauge.

TOOL **09915-74510: Oil pressure gauge**
09915-74540: Adaptor
09900-26006: Tachometer

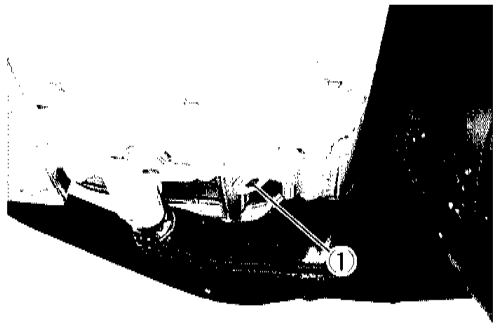

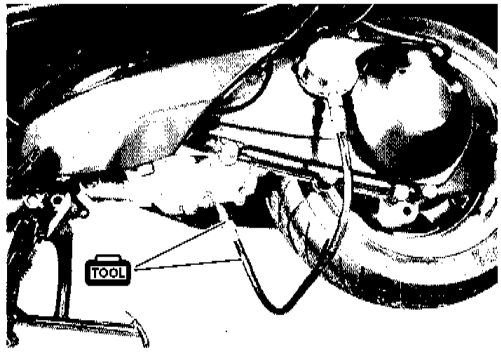

AUTOMATIC CLUTCH INSPECTION

This motorcycle is equipped with an automatic clutch and variable ratio belt drive transmission. The engagement of the clutch is governed by engine RPMs and centrifugal mechanism located in the clutch.

To insure proper performance and longer lifetime of the clutch assembly it is essential that the clutch engages smoothly and gradually. The following inspections must be performed:

1. INITIAL ENGAGEMENT INSPECTION

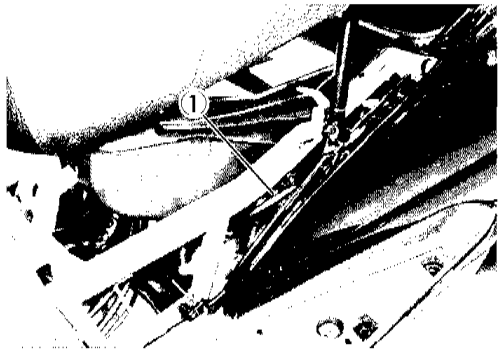

- Warm up the engine to normal operating temperature.
- Remove the frame cover. (See page 6-1.)
- Connect an electric tachometer to the high-tension cord ①.
- Seated on the motorcycle with the motorcycle on level ground, increase the engine RPMs slowly and note the RPM at which the motorcycle begins to move forward.

TOOL 09900-26006: Tachometer

Engagement r/min: 2600-3200 r/min

2. CLUTCH "LOCK-UP" INSPECTION

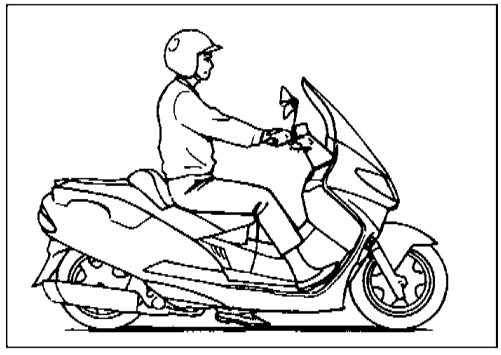

Perform this inspection to determine if the clutch is engaging fully and not slipping.

- Apply the front and rear brakes as firm as possible.
- Briefly open the throttle fully and note the maximum engine RPMs sustained during the test cycle.

⚠CAUTION

Do not apply full power for more than 3 seconds or damage to the clutch or engine may occur.

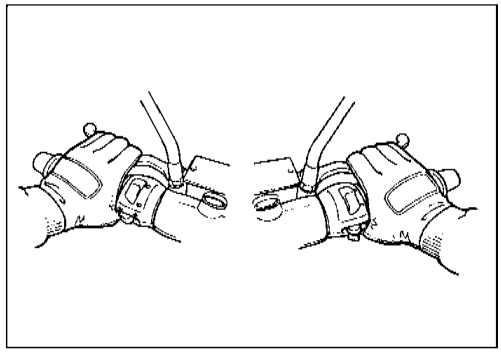

Lock-up r/min: 4200-5200 r/min

ENGINE

CONTENTS

⚠CAUTION

- **Mark an identification of assembly location on each removed part so that each will be restored to the original position during reassembly.**
- **Wash clean and dry the removed parts before inspecting and measuring.**
- **Oil the rotating or sliding parts before assembly.**
- **Make sure to use the correct type of lubricant where specified.**
- **Check that each rotating or sliding part moves or operates smoothly after assembly.**
- **Make sure to follow the bolt tightening order where specified.**
- **If the correct length of the bolt is confused when tightening the crankcase or cover, insert all the bolts and check that the tightening margin is equal in each bolt.**

ENGINE COMPONENTS REMOVABLE WITH ENGINE IN PLACE

The parts listed below can be removed and reinstalled without removing the engine from the frame. Refer to page listed in each section for removal and reinstallation instructions.

ENGINE REMOVAL AND REINSTALLATION

ENGINE REMOVAL

To remove the engine from the frame, follow the procedures below.

NOTE:
If the engine is dirtied, wash the machine with a steam cleaner before removing the engine.

- Disconnect the breather hose ①.

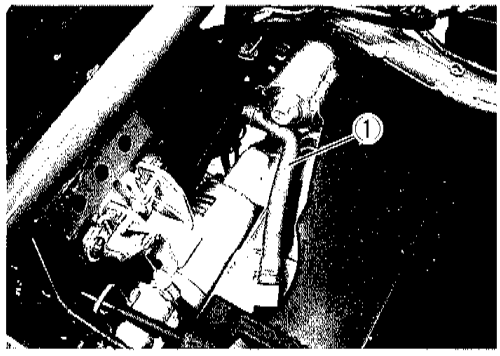

- Loosen the air cleaner box mounting bolt ②.
- Remove the air cleaner hose ③.
- Disengage the hooks on the bottom of the air cleaner box and remove the box.

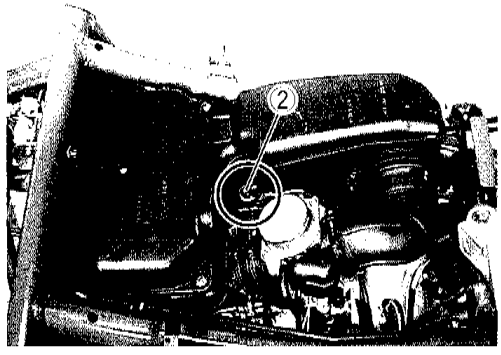

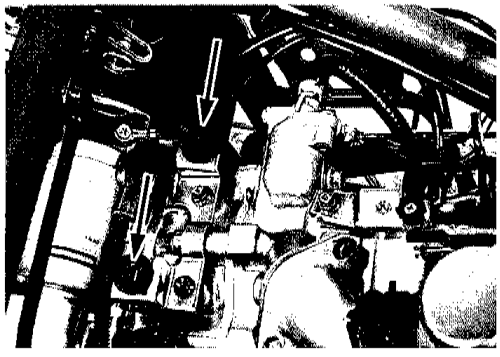

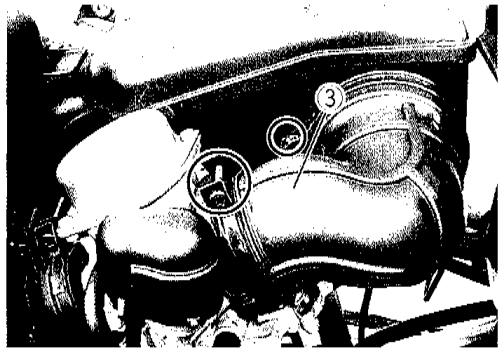

- Disconnect the battery terminals.

⚠CAUTION

To disconnect the battery terminal, negative ⊖ terminal must be removed first before ⊕ terminal.

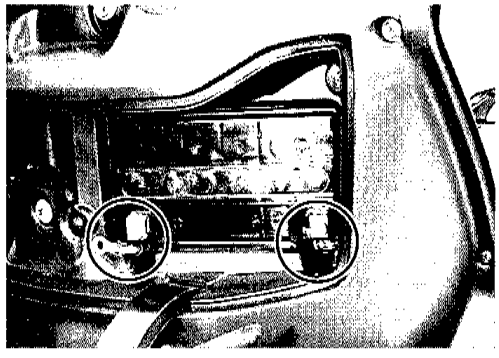

- Loosen the intake pipe clamp screws and remove the carburetor ①.

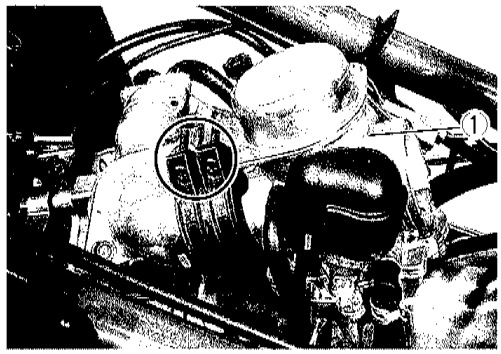

- Disconnect the starter motor lead wire ② and the engine ground lead wire ③.
- Disconnect the water temperature gauge lead wire coupler ④.

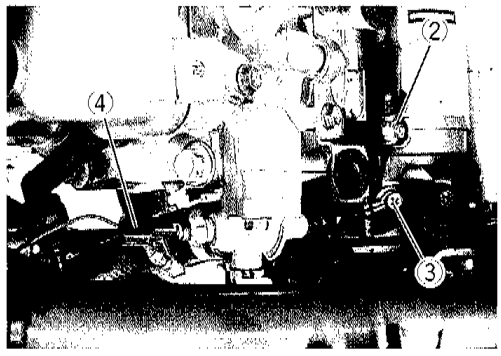

- Disconnect the ignition coil lead wire ⑤ and coupler ⑥.

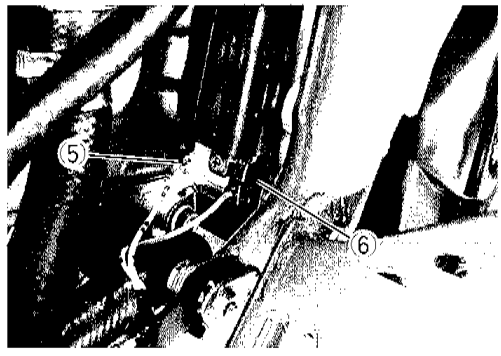

- Disconnect the starter lead wire coupler ⑦ and the pick up coil lead wire coupler ⑧.

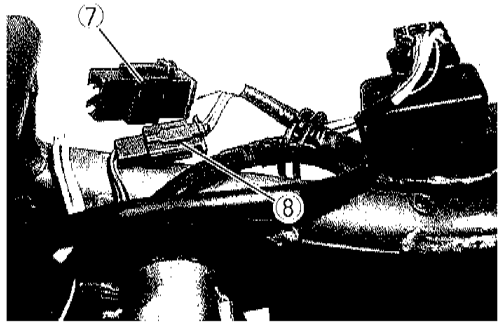

- Remove the water hoses ⑨, ⑩ and ⑪.

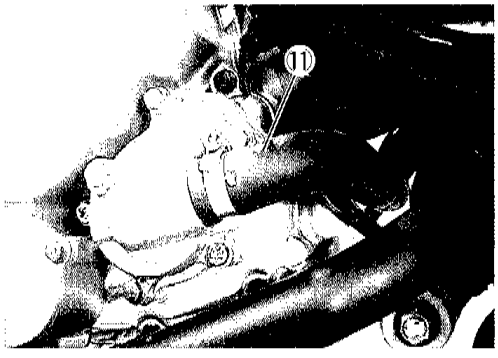

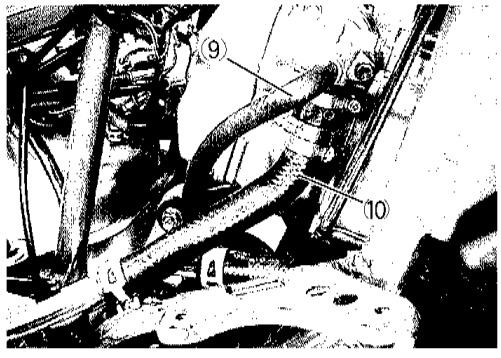

- Remove the exhaust pipe bolts.
- Remove the muffler mounting nuts and then remove the muffler ①.
- Remove the washers.
- Remove the muffler bracket ②.

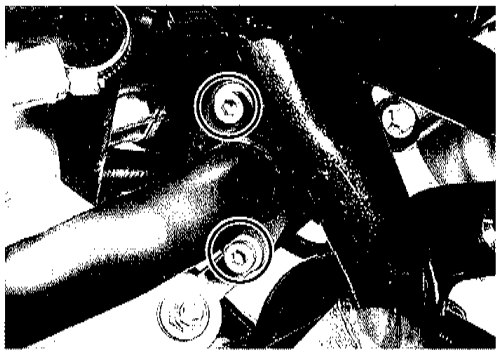

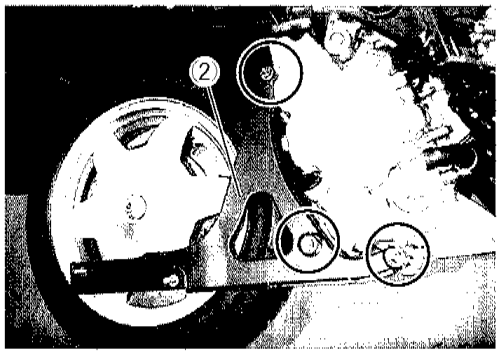

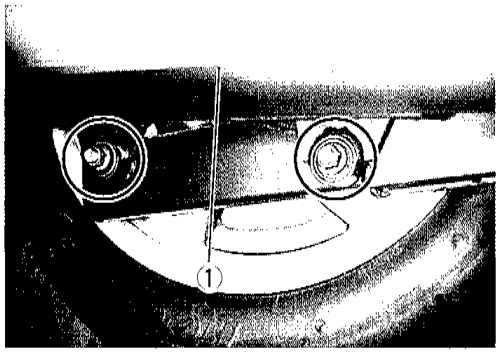

- Remove the rear wheel nut ③ and washer ④.
- Remove the rear wheel ⑤.

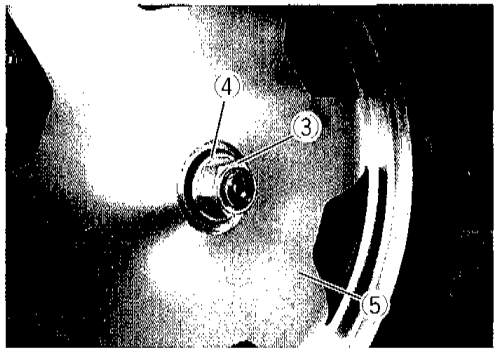

- Remove the rear brake caliper mounting bolts ⑥.
- Remove the rear brake hose clamp ⑦.
- Remove the rear brake caliper ⑧.

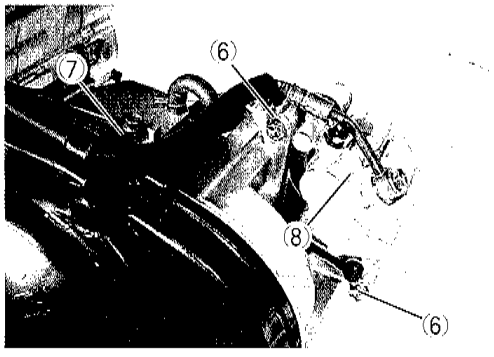

- Support the engine using an engine jack.

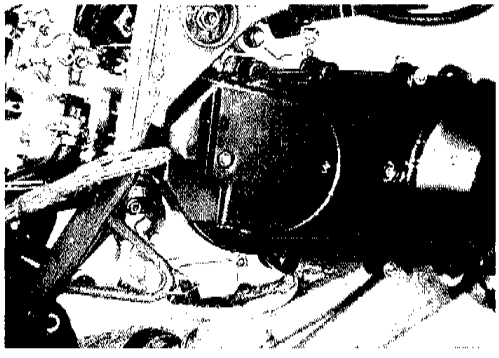

- Remove the cushion rod bolt and nut ① located on the front lower part of the engine.

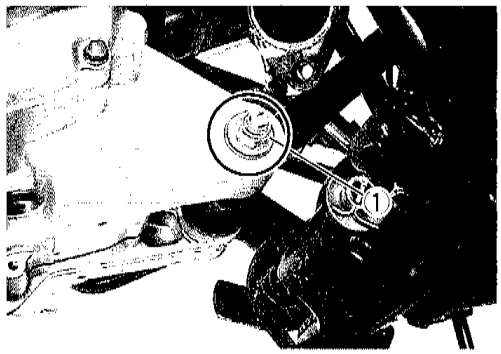

- Remove the engine mounting bolt and nut ②.
- Remove the engine from the frame.

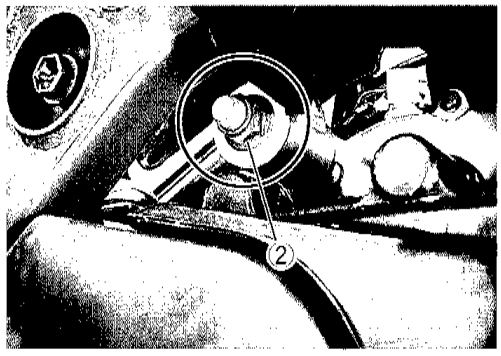

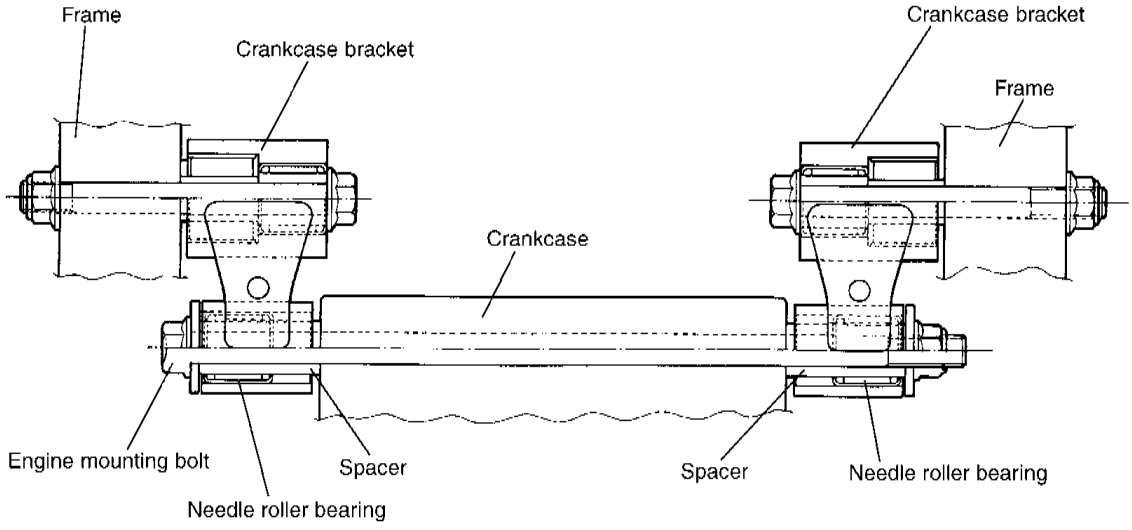

ENGINE REINSTALLATION

- To reinstall the engine, reverse the sequence of the removal procedures taking care of the following instructions.

- Install the spacers (① and ②) to the engine mounting brackets.

NOTE:

Apply grease to the spacers and needle roller bearings.

99000-25010 : SUZUKI SUPER GREASE "A"

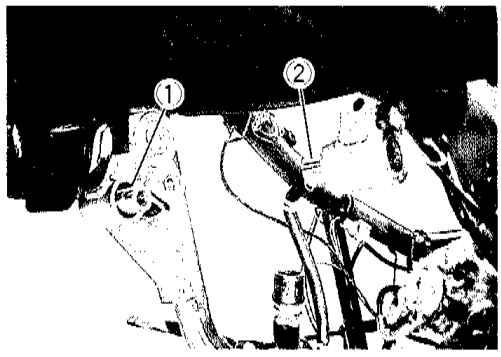

- Tighten the engine mounting bolts to the specified torque.

Lower engine mounting bolt: 50 N · m (5.0 kg-m)

Upper engine mounting bolt: 93 N · m (9.3 kg-m)

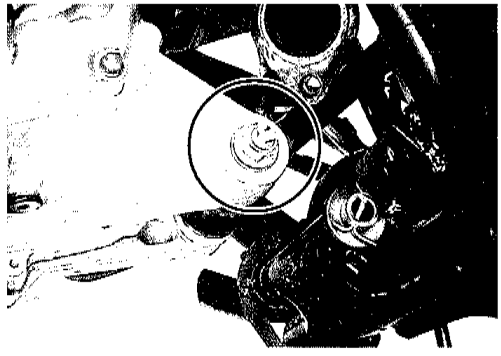

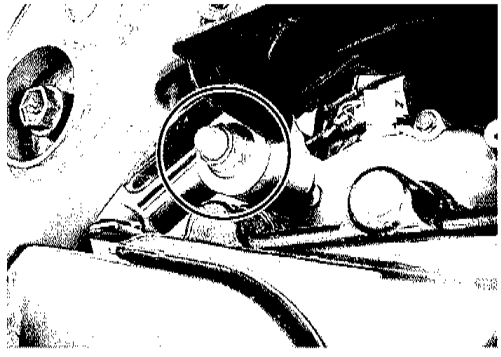

CAUTIONS AFTER REINSTALLATION

- After the engine has been mounted, install the lead wires, cables and hoses securely.(See PP. 8-9 to 8-11.)
- Pour the specified amount of engine oil.(See P. 2-9.)
- Pour the specified amount of engine coolant.(See P. 2-7.)
- Perform the following adjustments:
  - Throttle cable (See P. 2-6.)
  - Idle adjustment (See P. 2-6.)
- Check for leakage of the engine oil and engine coolant.

ENGINE DISASSEMBLY

- Disconnect the spark plug cap.
- Remove the ignition coil along with the bracket.

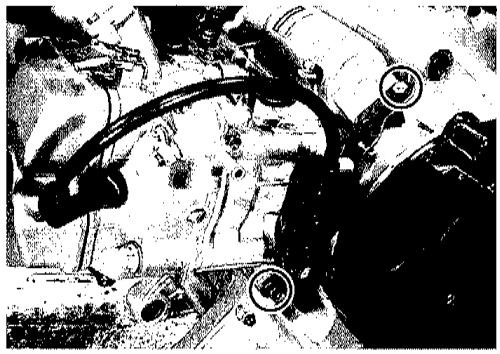

- Remove the starter motor ①.

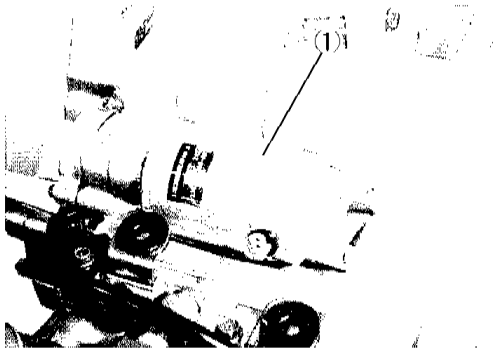

- Remove the exhaust pipe ②.

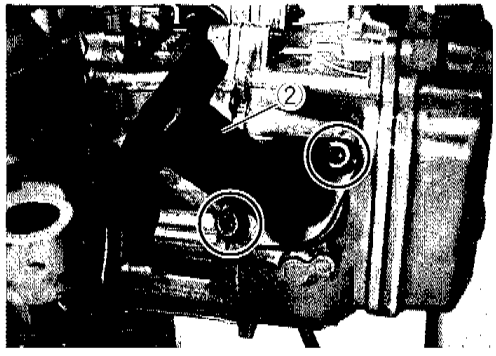

- Remove the air cleaner box brackets ③ and ④.
- Remove the intake pipe ⑤.
- Remove the O-ring ⑥.

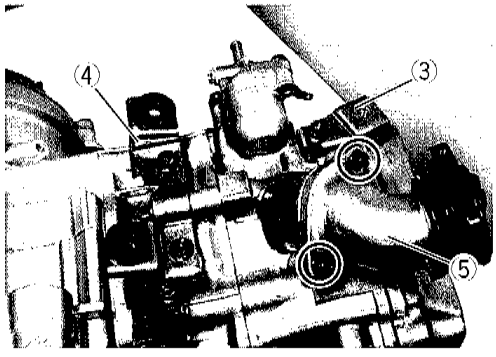

- Remove the cylinder head cover ⑦.

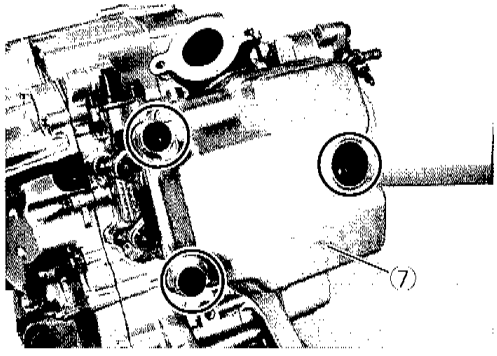

- Remove the cooling fan cover.
- Bring the piston to TDC on compression stroke by turning the crankshaft.

NOTE:

Check that all the valves have clearance in this position.

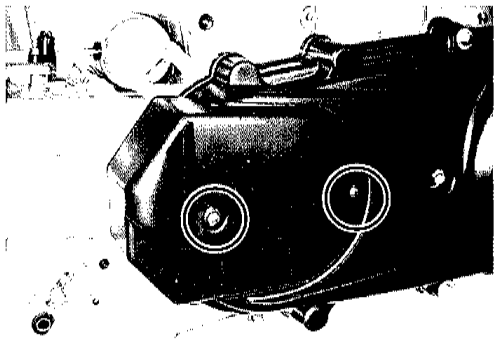

- Remove the spring holder bolt ① first and then remove the cam chain tensioner adjuster ②.

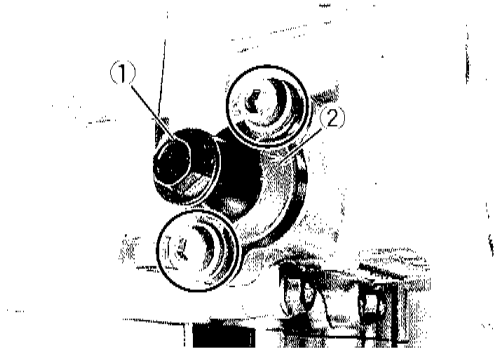

- Remove the camshaft journal holder ③.
- Remove the dowel pin ④.
- Bend down the lock portions of the washer and remove the sprocket bolts ⑤ and washer ⑥.
- Remove the cam sprocket ⑦ from the cam chain.

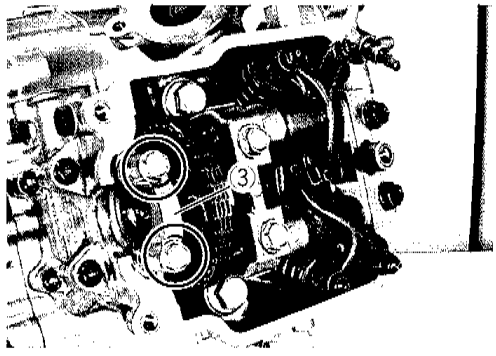

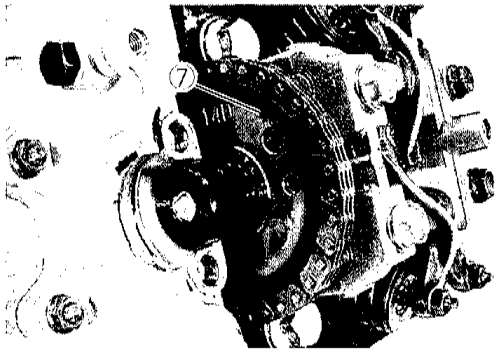

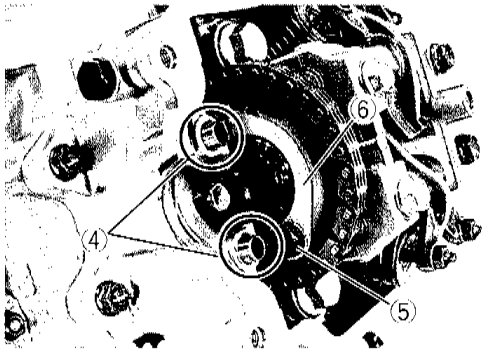

- Remove the camshaft journal holder ⑧.

NOTE:

For details of rocker arm disassembly and reassembly, refer to page 3-22.

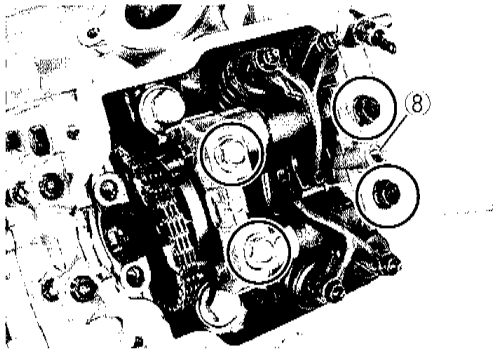

- Remove the camshaft ① and cam sprocket ②.

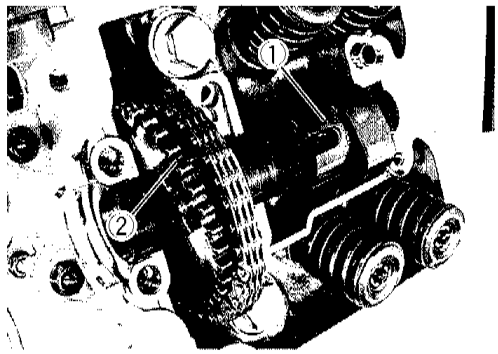

- Remove the dowel pins ③ and C-ring ④.

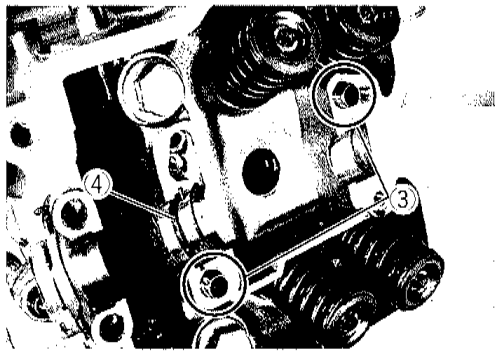

- Remove the 6-mm cylinder head nuts ⑤.
- Remove the 8-mm cylinder head nuts ⑥.
- Remove the 10-mm cylinder head bolts ⑦ along with the copper washers ⑧.

NOTE:

The cylinder head bolts must be loosened diagonally and evenly.

NOTE:

For details of valve disassembly and reassembly, refer to pages 3-23 and 30.

For details of thermostat disassembly and reassembly, refer to pages 3-24 and 5-8.

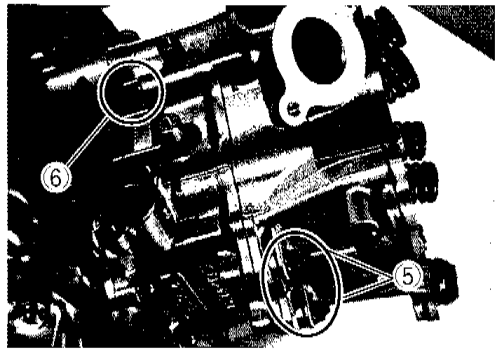

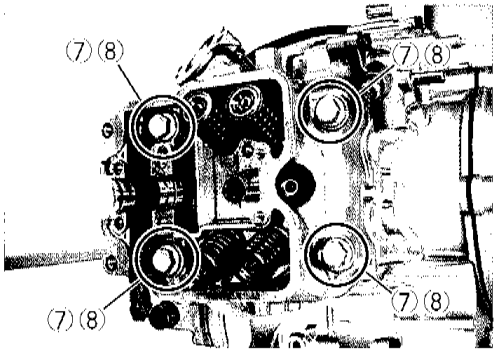

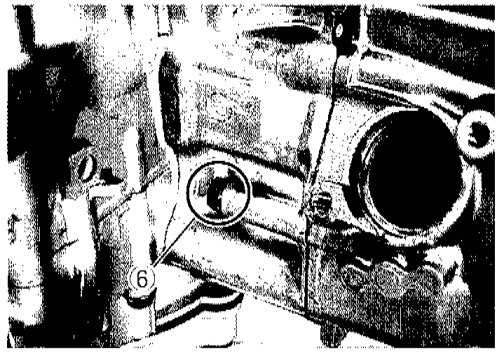

- Remove the cylinder head gasket ⑨ and dowel pins ⑩.

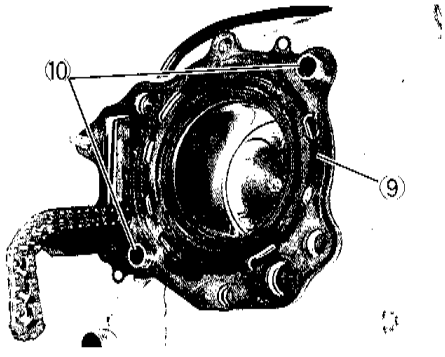

- Remove the cam chain guide ①.

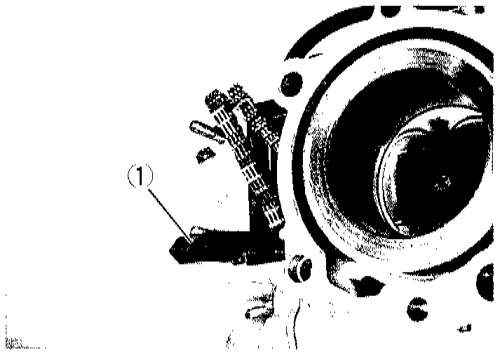

- Remove the cylinder nuts ②.
- Remove the cylinder ③.

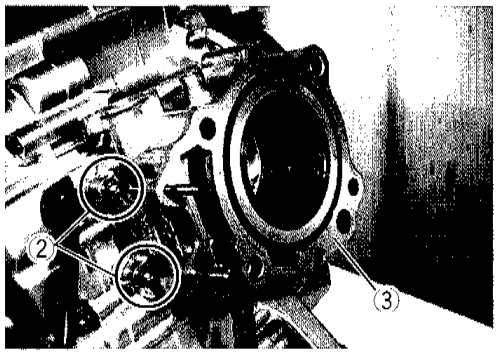

- Remove the cylinder gasket ④ and dowel pins ⑤.

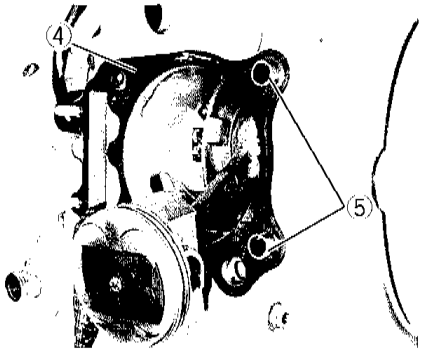

- Remove the piston pin circlip ⑥.
- Remove the piston pin ⑦.

⚠CAUTION

Use care not to drop the removed circlip into the crankcase.

- Remove the piston ⑧.

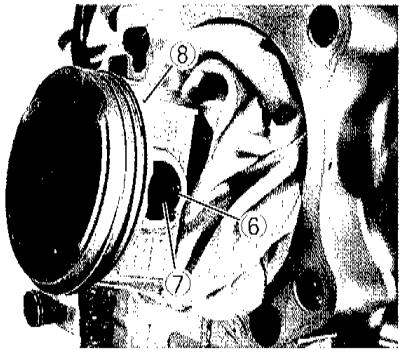

- Remove the oil filter cap ①.
- Remove the O-ring ②.
- Remove the oil filter ③.
- Remove the O-ring ④.

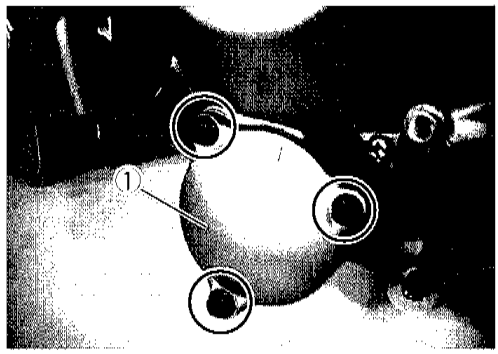

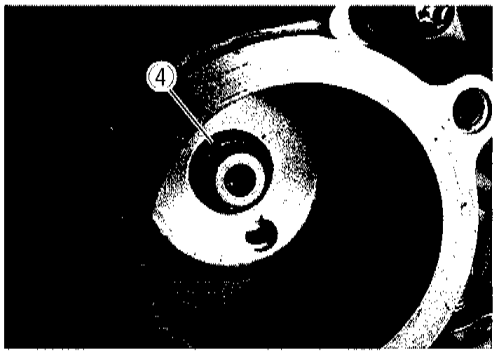

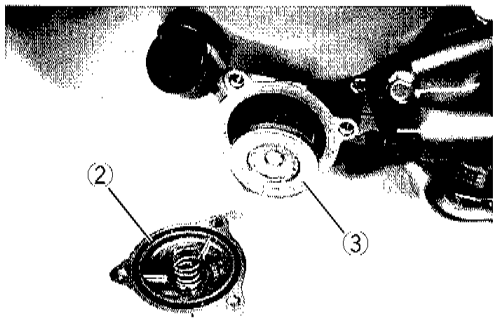

- Remove the water pump ⑤.

NOTE:

For details of water pump disassembly and reassembly, refer to pages 5-9 and 11.

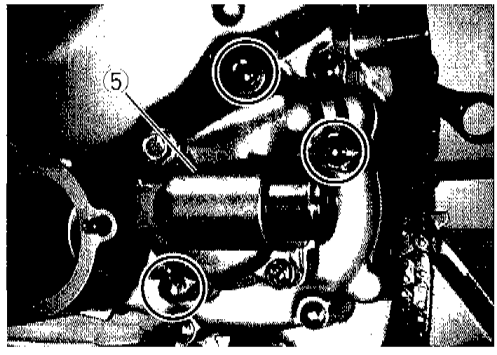

- Remove the O-ring ⑥.

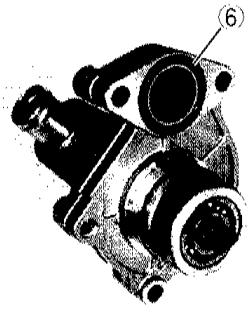

- Remove the generator cover ⑦.

NOTE:

For details of generator stator disassembly and reassembly, refer to pages 3-49 and 50.

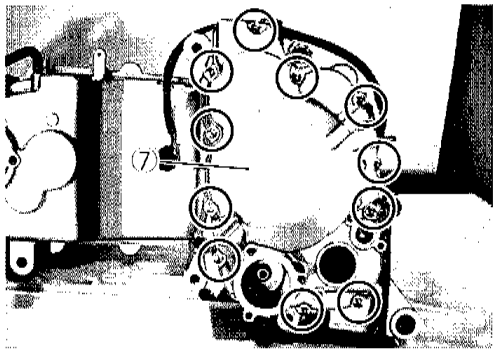

- Remove the gasket ① and dowel pins ②.

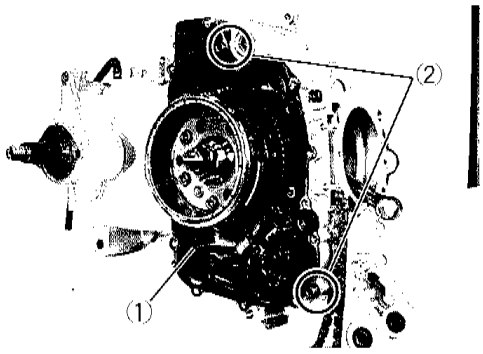

- Remove the clutch cover ③.

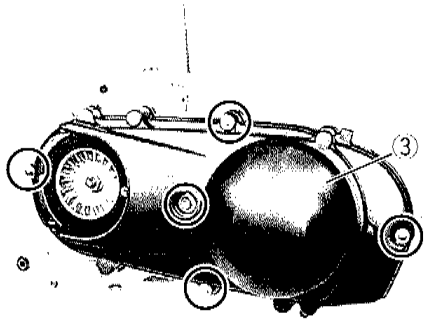

- Remove the clutch inner cover ④.

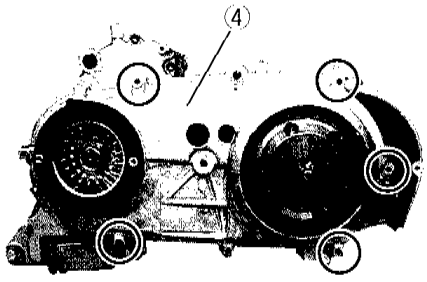

- With the crankshaft held immovable, loosen the fixed drive face nut ⑤.
- Remove the washer ⑥.
- Remove the fixed drive face ⑦.

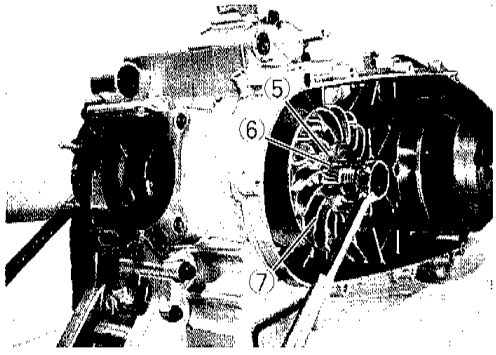

- Remove the drive belt ⑧.

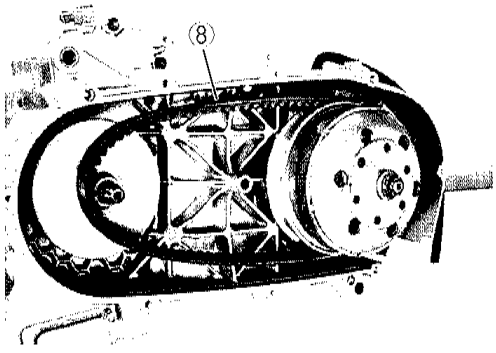

- Remove the movable drive face assembly ①.

NOTE:

For details of movable drive face disassembly and reassembly, refer to pages 3-36 and 37.

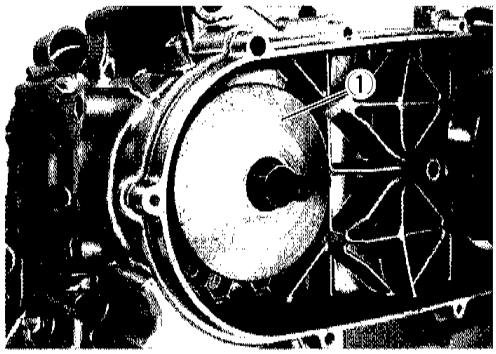

- With the clutch housing held immovable using the special tool, loosen the clutch housing nut ②.

09930-40113 : Rotor holder

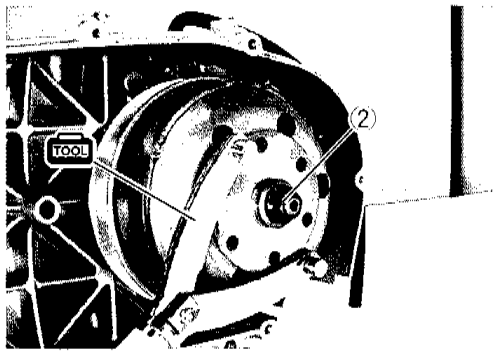

- Remove the clutch shoe / movable driven face assembly ③.

NOTE:

For details of clutch shoe / movable driven face disassembly and reassembly, refer to pages 3-37 and 41.

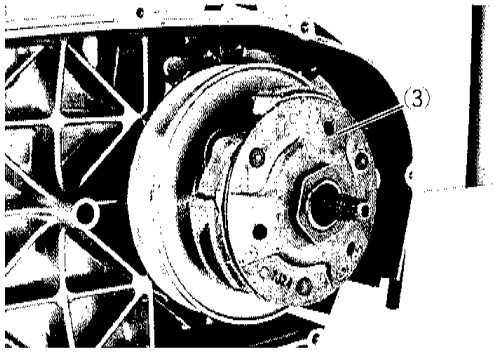

- Remove the transmission oil drain bolt ④ and drain transmission oil.
- Remove the driveshaft ⑤ together with the transmission cover ⑥.

NOTE:

For details of removal and reinstallation procedures for driveshaft and bearing , refer to pages 3-43 and 44.

- Remove the washer ⑦.
- Remove the O-ring ⑧.

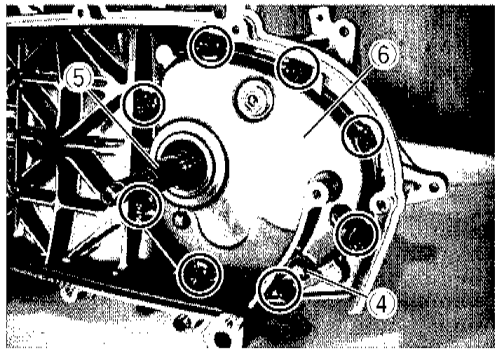

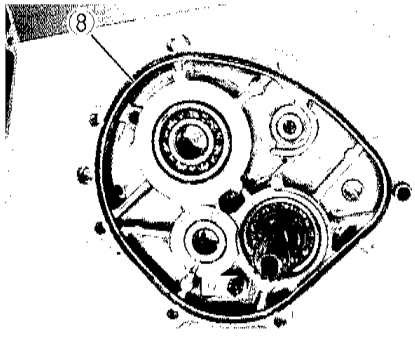

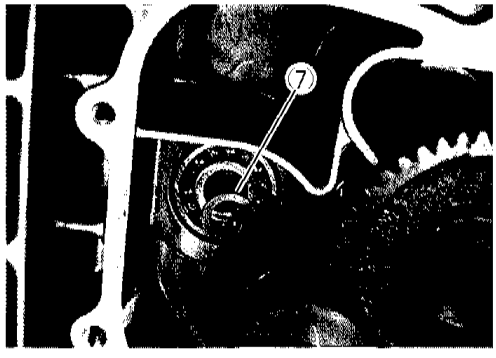

- Remove the washers ① and ②.

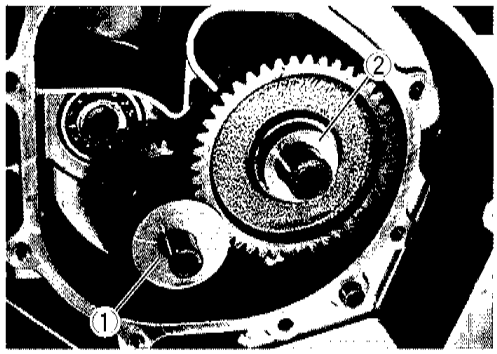

- Remove the final driven gear ③ together with the rear axle shaft.

NOTE:

For details of removal and reinstallation procedures for final driven gear, refer to pages 3-45 and 46.

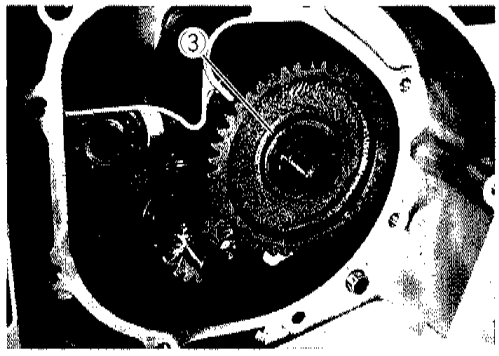

- Remove the idle shaft ④.

NOTE:

For details of removal and reinstallation procedures for idle gear, refer to page 3-45.

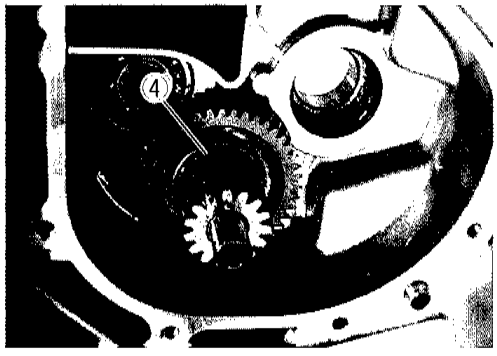

- Remove the washer ⑤.

NOTE:

For details of bearing removal and reinstallation procedures, refer to pages 3-43 and 44.

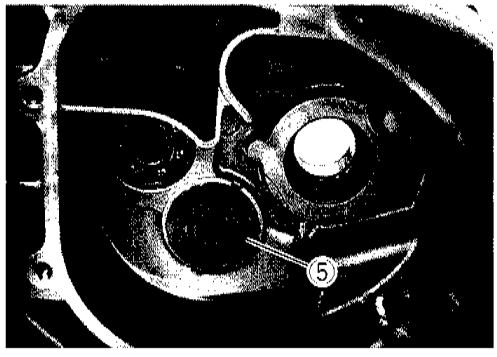

- Remove the oil sump filter cap ①.

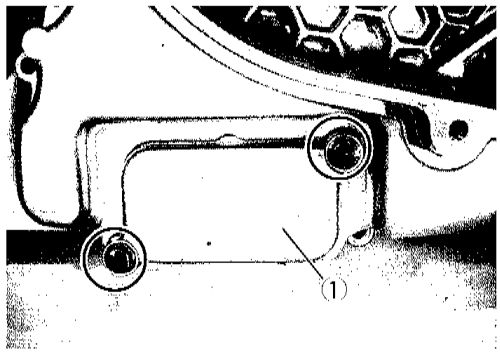

- Remove the O-ring ②.
- Pull out the oil sump filter ③.

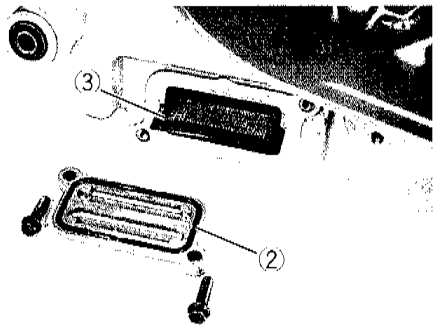

- With the generator rotor held immovable, loosen the generator rotor nut ④.

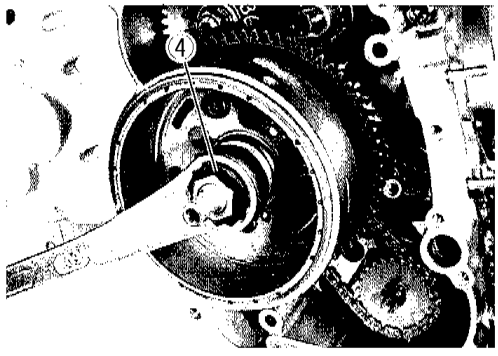

- Remove the generator rotor ⑤ using the special tools.

TOOL **09930-31920 : Rotor remover**
09930-30721 : Rotor remover

NOTE:
The "BOLT" of the rotor remover (09930-30721) is used in conjunction with the rotor remover (09930-31920).

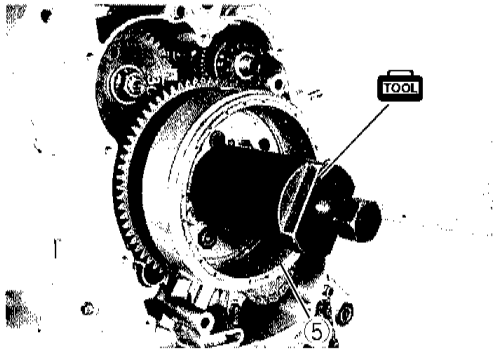

- Remove the key ⑥ and starter driven gear ⑦.

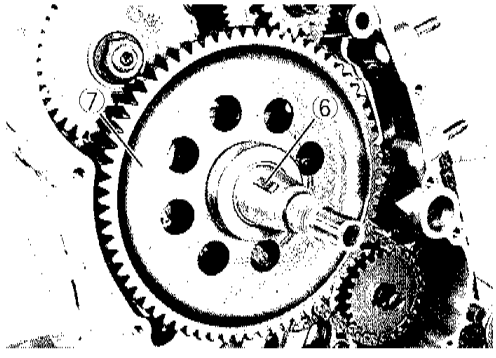

- Remove the oil pump ①.
- Remove the oil pump chain ②.

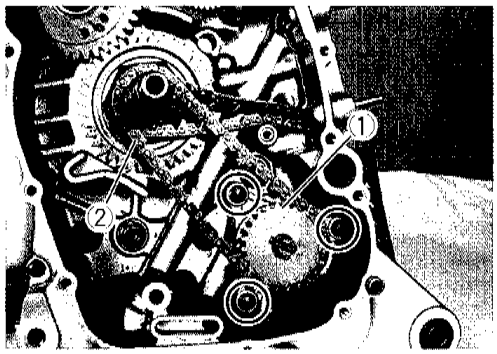

- Remove the circlip ③.
- Remove the oil pump gear ④.

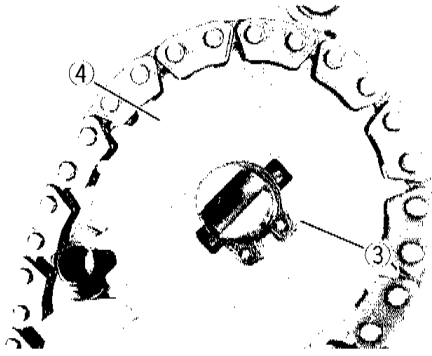

- Remove the pin ⑤ and washer ⑥.

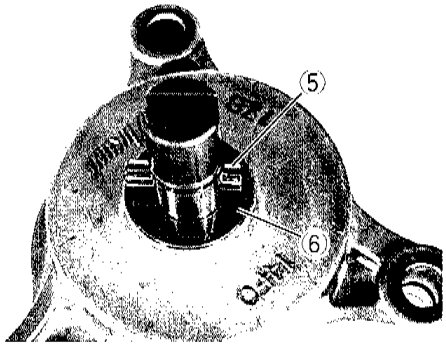

- Remove the cam chain ⑦, starter idle gear shaft ⑧ and starter idle gear ⑨.

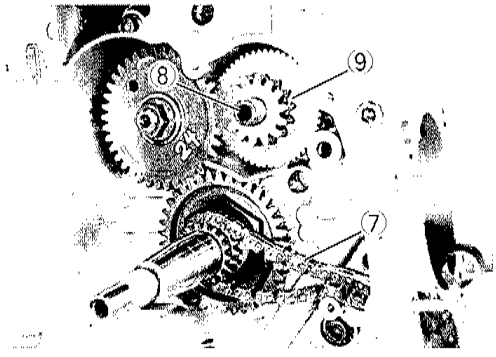

- Insert a proper steel rod into the crankcase hole Ⓐ and pass through the crankshaft web holes in order to prevent the crankshaft from turning.
- Remove the balancer driven gear nut ① and washer ②.
- Remove the balancer driven gear ③.

NOTE:

For details of scissors gear (balancer driven gear) disassembly and reassembly, refer to page 3-46.

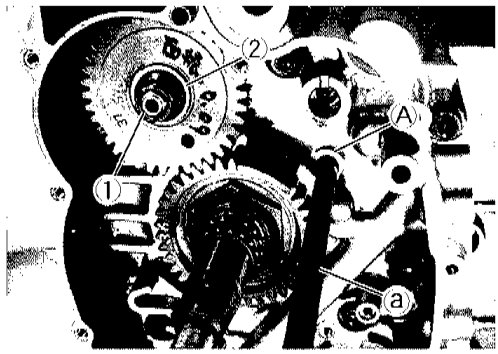

ⓐ Steel rod
ⓑ Crankshaft

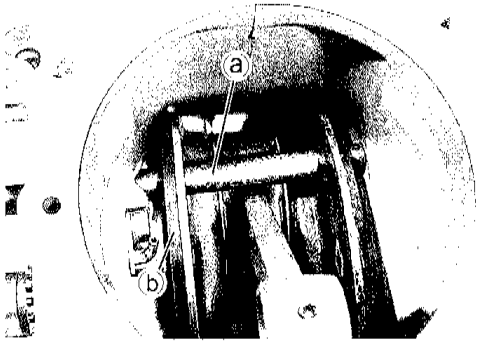

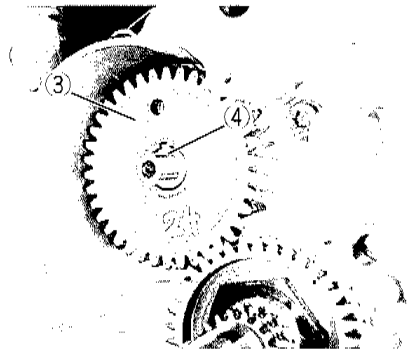

- Remove the balancer shaft key ④.
- With the crankshaft held immovable, loosen the balancer drive gear nut ⑤.

TOOL 09922-21410: Long socket (46mm)

- Remove the balancer drive gear ⑥.
- Remove the pin ⑦.

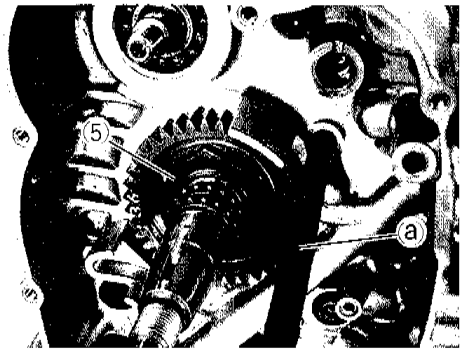

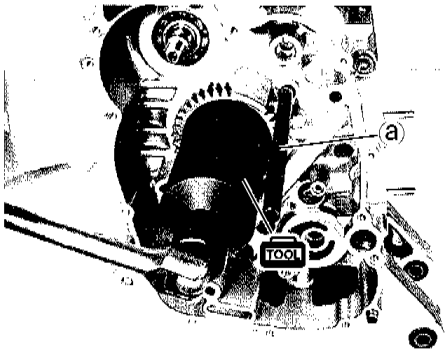

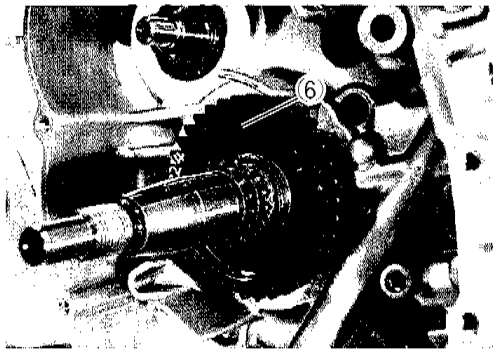

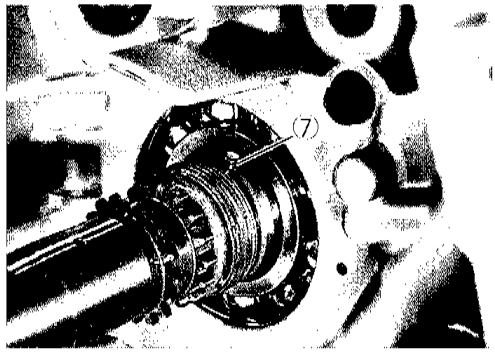

- Loosen and remove the 6-mm crankcase bolts ①.
- Loosen and remove the 8-mm crankcase bolts ②.

NOTE:

Loosen the smaller diameter crankcase bolts first and then thicker ones diagonally and evenly.

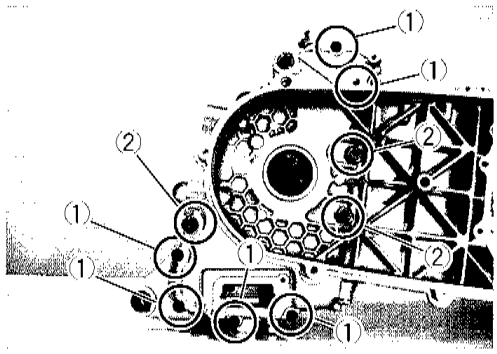

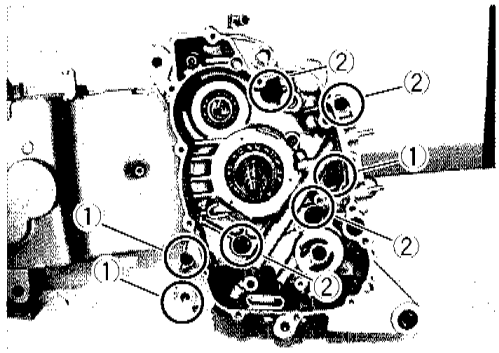

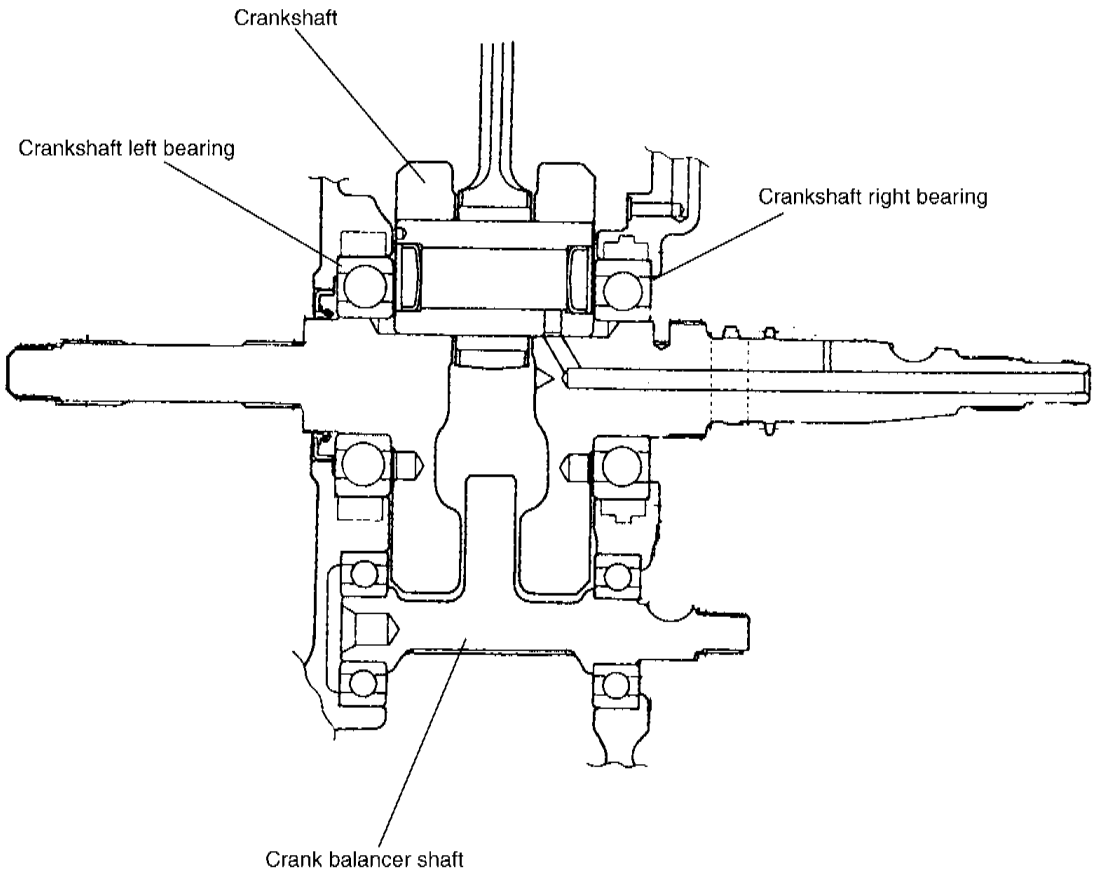

- Separate the crankcase into left and right halves using the special tool.

TOOL 09920-13120: Crankcase separator

NOTE:

The crankcase separator plate is parallel with the end face of the crankcase.

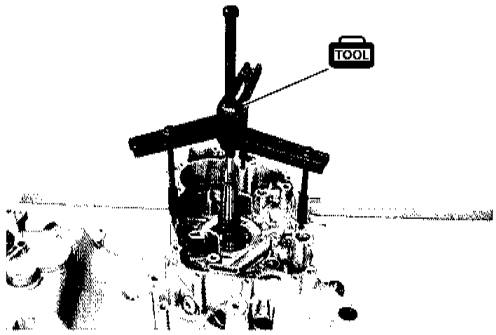

⚠CAUTION

The crankshaft must remain in the left crankcase half.

- Remove the O-ring ③.

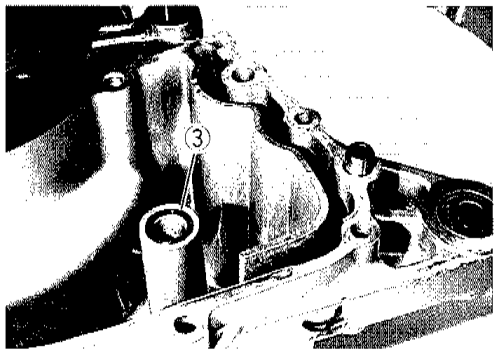

- Remove the balancer shaft ④.

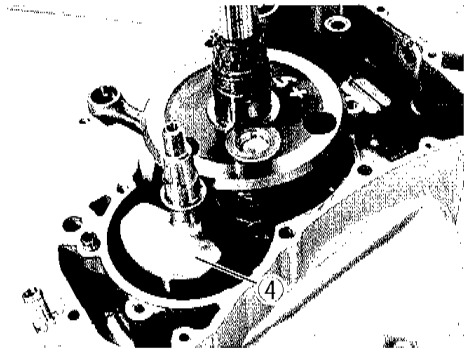

- Remove the crankshaft using the special tool.

TOOL 09920-13120: Crankcase / crankshaft separator

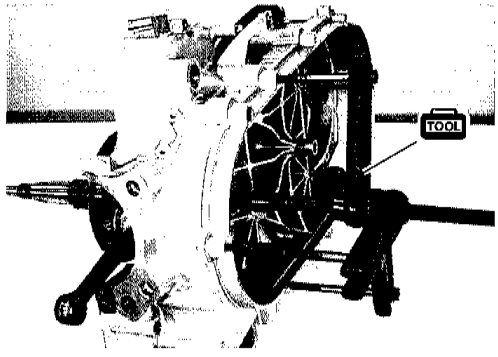

- Remove the oil nozzle ①.

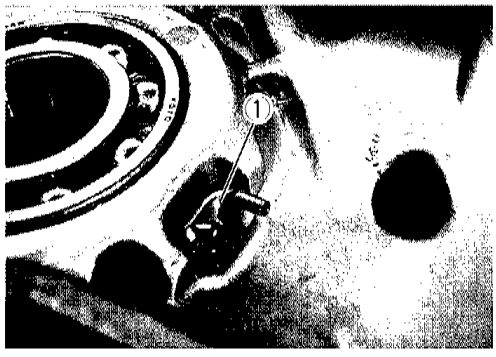

ENGINE COMPONENT INSPECTION AND SERVICE

CRANKCASE OIL SEAL, BEARING AND BUSHING

BEARING INSPECTION

Rotate the bearing inner race by finger to inspect for abnormal play, noise and smooth rotation while the bearings are in the crankcase.

Replace the bearing in the following procedure if there is anything unusual.

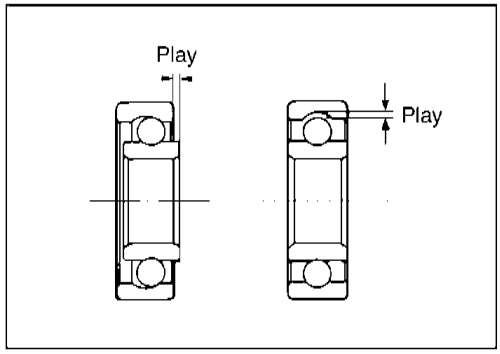

BEARING / OIL SEAL REMOVAL

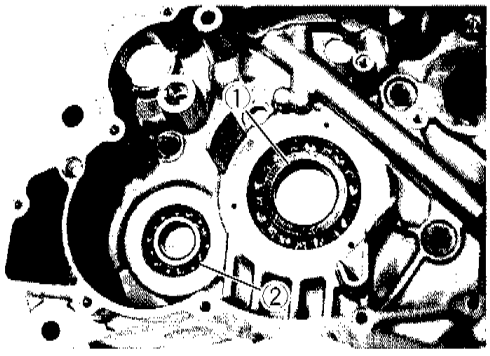

- Remove the bearing ①.

TOOL 09913-75520: Bearing remover / installer

- Remove the bearing ②.

TOOL 09913-75821: Bearing remover / installer

NOTE:

If abnormal noise does not occur, it is not necessary to remove the bearing.

⚠CAUTION

The removed bearing should be replaced with a new one.

- Remove the oil seal ①.

TOOL 09913-50121: Oil seal remover

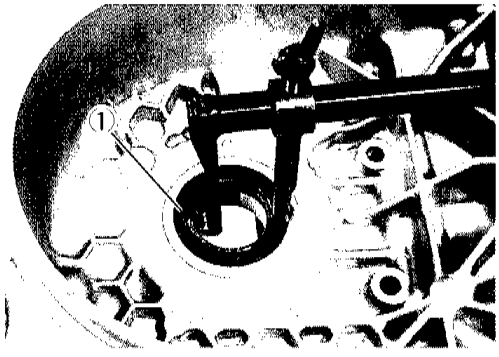

⚠CAUTION

The removed oil seal should be replaced with a new one.

- Remove the bearing ②.

TOOL 09913-76010: Bearing remover / installer

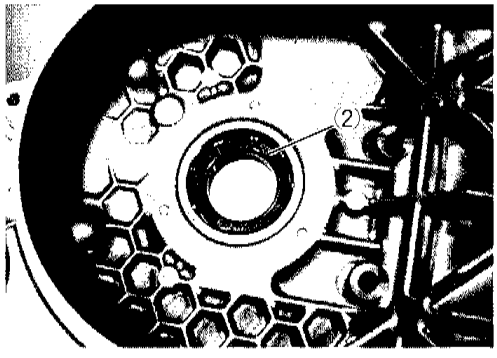

NOTE:

If abnormal noise does not occur, it is not necessary to remove the bearing.

⚠CAUTION

The removed bearing and oil seal should be replaced with new ones.

- Remove the bearing retainer ③.
- Remove the bearing ④.

TOOL 09913-75830: Bearing installer

- Remove the oil seal ⑤.

NOTE:

If abnormal noise does not occur, it is not necessary to remove the bearing.

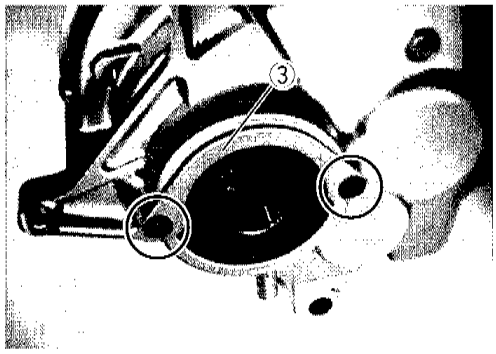

⚠CAUTION

The removed bearing and oil seal should be replaced with new ones.

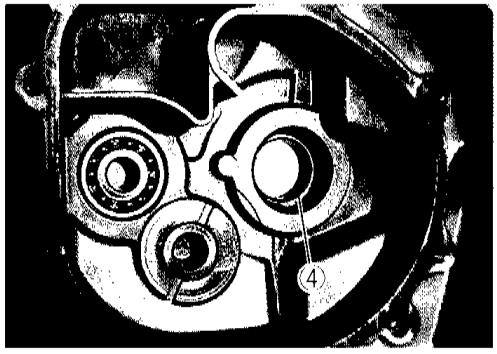

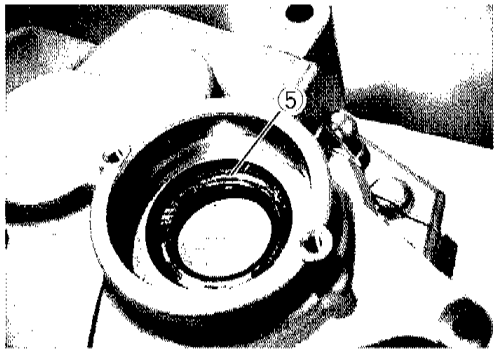

- Remove the bearings ⑥ and ⑦.

TOOL 09921-20210: Bearing remover
09930-30102: Sliding shaft

NOTE:

If abnormal noise does not occur, it is not necessary to remove the bearing.

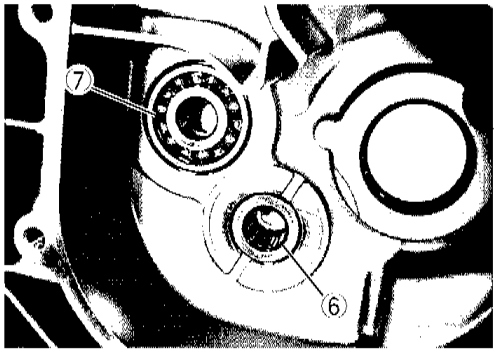

⚠CAUTION

The removed bearing and oil seal should be replaced with new ones.

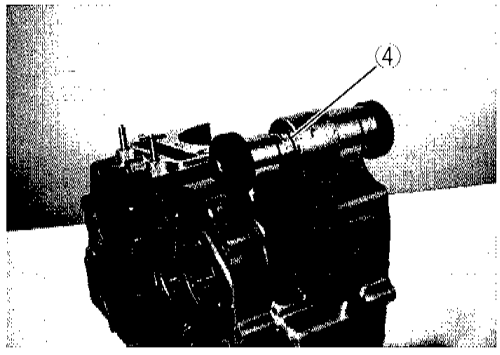

BUSHING INSPECTION

Inspect the bushing for wear or damage.

If any defects are found,replace the bushing with a new one.

- Remove the bushings ④ from left and right crankcase halves.

TOOL 09924-84521: Bearing remover / installer

NOTE:

To remove the bushing ④, use an appropriate size steel tube ⑤ such as a spacer.

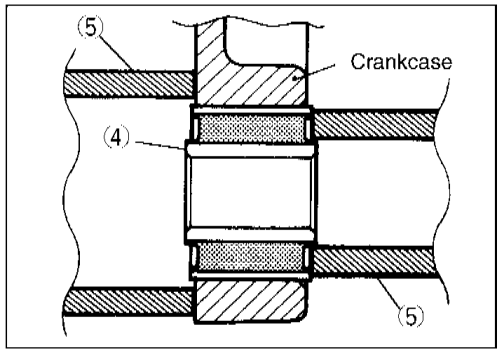

ROCKER ARM AND SHAFT

DISASSEMBLY

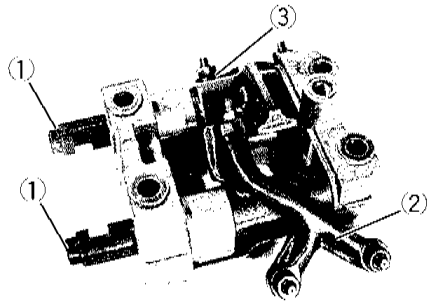

- Pull out the rocker arm shafts①and remove the exhaust and intake valve rocker arms(② and ③).

ROCKER ARM SHAFT OUTSIDE DIAMETER INSPECTION

On the sliding surface, take two measurements, at right angle to each other.

If the outside diameter measured is less than the standard value, replace the shaft.

Standard: 11.973-11.984mm

TOOL 09900-20205: Micrometer(0-25mm)

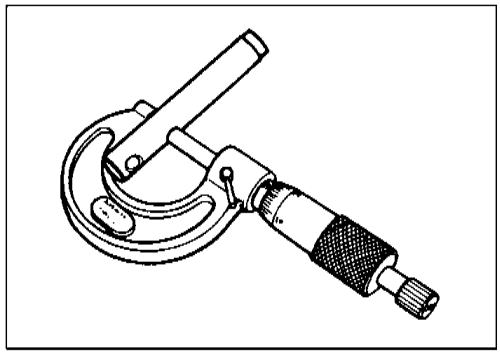

ROCKER ARM SHAFT INSIDE DIAMETER INSPECTION

Measure the rocker arm inside diameter in two directions at right angle to each other.

If the inside diameter measured exceeds the standard value, replace the shaft.

Standard: 12.000-12.018mm

TOOL 09900-20605: Dial calipers

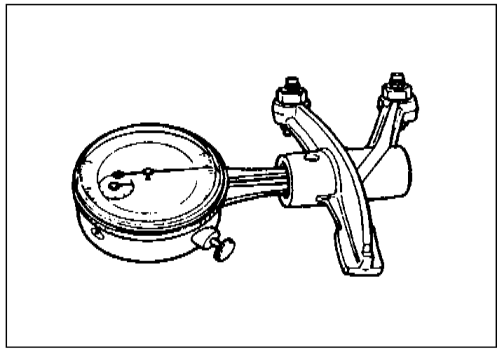

REASSEMBLY

- Apply engine oil to the rocker arm shafts sufficiently.

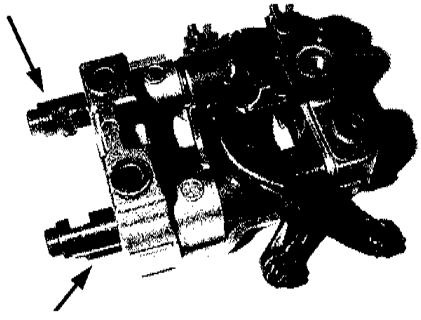

CYLINDER HEAD

DISASSEMBLY

- Compress the valve spring ① using the special tool.

TOOL 09916-14510: Valve lifter
09916-14910: Attachment:
09916-84511: Tweezers

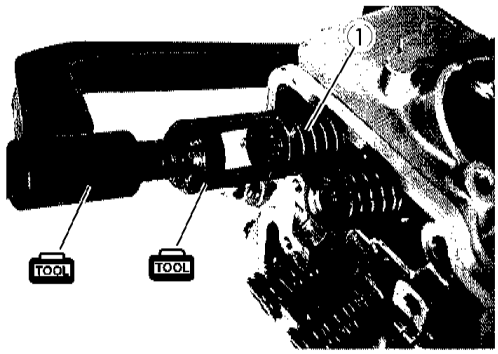

- Remove the valve cotter halves ②.

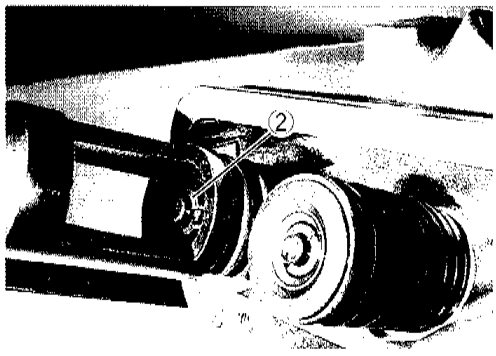

- Remove the valve spring retainer ③.
- Remove the outer spring ④ and inner spring ⑤.

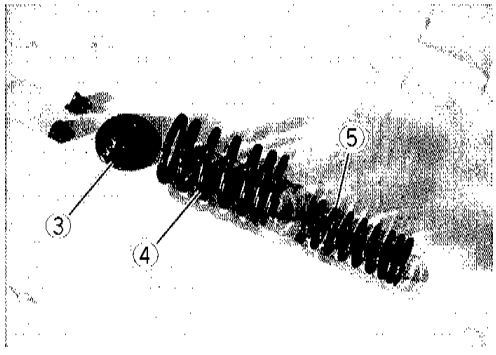

- Remove the valve ⑥ from the other side.
- Remove the valve stem seal ⑦.
- Remove the spring seat ⑧.

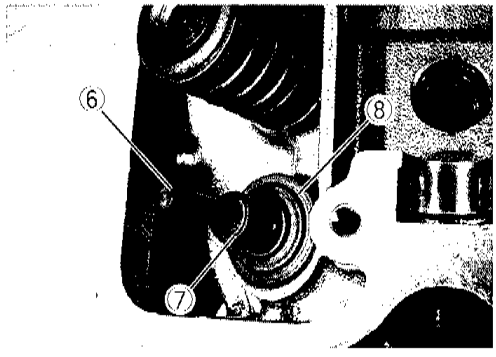

- Remove the cam chain tensioner bolt ① gasket washer ②.
- Remove the cam chain tensioner ③.

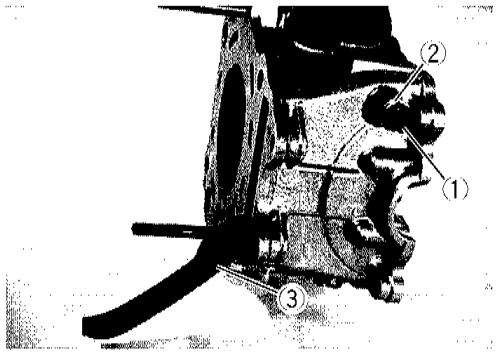

- Remove the thermostat cover ④.

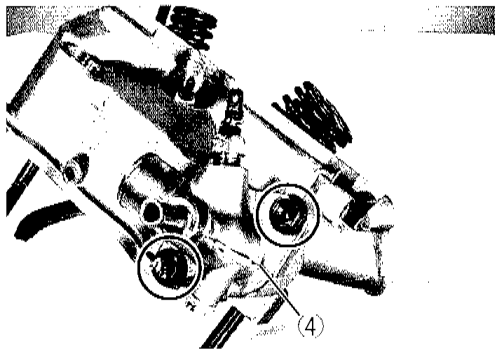

- Remove the thermostat ⑤.

NOTE:

For details of thermostat inspection and reassembly, refer to pages 5-7 and 8.

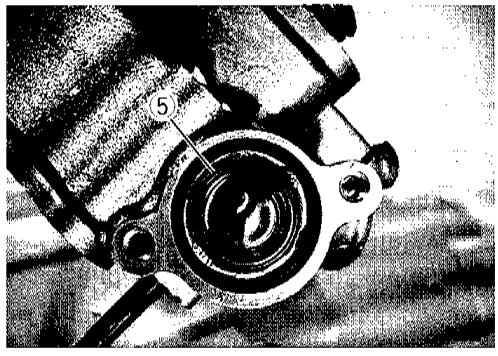

CYLINDER HEAD DISTORTION

Check for distortion of the mating surface diagonally with a straightedge and thickness gauge as shown.

If distortion exceeds the service limit, repair or replace the cylinder head.

Service Limit: 0.05mm

TOOL 09900-20803: Thickness gaugce

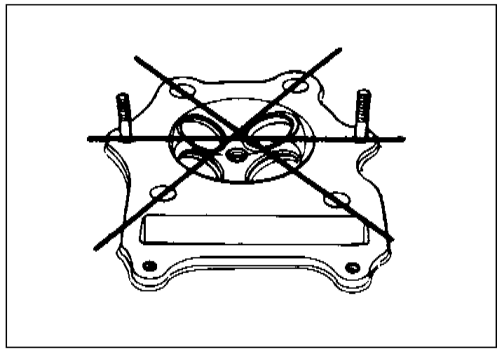

VALVE STEM RUNOUT

Check the valve stem for abnormal wear or bend.

Place the valve on V-blocks and measure runout.

If the service limit is exceeded or abnormal condition exists, replace the valve.

Service Limit: 0.05mm

TOOL 09900-20606: Dialgauge (1/100mm)
09900-20701: Magnetic stand
09900-21304: V-block (100mm)

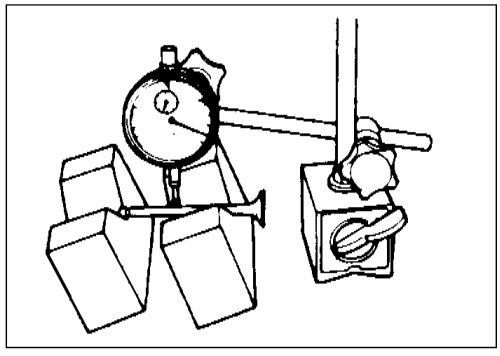

VALVE HEAD RADIAL RUNOUT

Place a dial gauge as shown and measure valve head radial runout.

If the service limit is exceeded, replace the valve.

Service Limit: 0.03mm

TOOL 09900-20606: Dial gauge (1/100mm)
09900-20701: Magnetic stand
09900-21304: V-block (100mm)

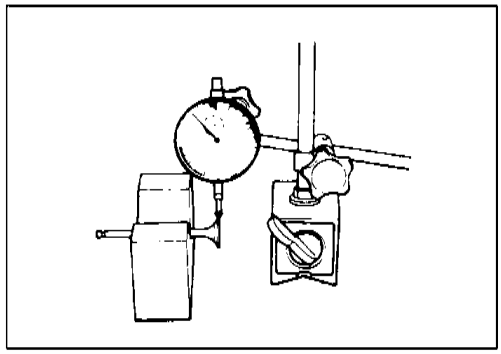

VALVE FACE WEAR

Visually inspect each valve face for wear. Replace any valve with an abnormally worn face. The thickness of the valve face decreases as the face wears. Measure the valve face Ⓣ. If it is out of specification replace the valve with a new one.

TOOL 09900-20102: Vernier calipers

Service Limit

Valve face thickness Ⓣ : 0.5mm

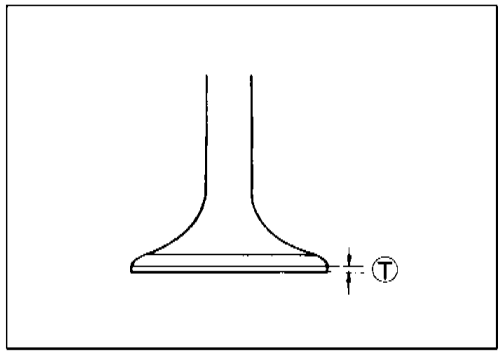

VALVE STEM DEFLECTION

With the valve inserted into the valve guide, lift the valve head 10mm from the valve seat and measure the deflection in X and Y directions.

TOOL 09900-20606: Dial gauge (1/100mm)
09900-20701: Magnetic stand

Service Limit

Valve stem deflection (IN & EX): 0.35mm

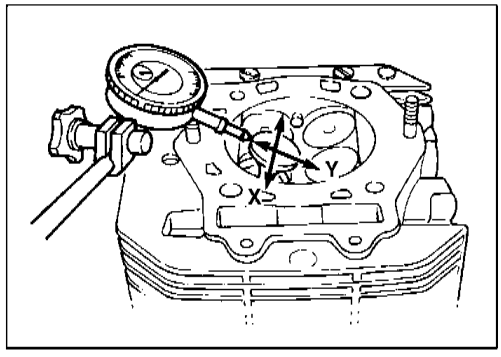

VALVE STEM DIAMETER

If the valve stem deflection exceeds the service limit, measure the valve stem outside diameter. If the diameter measured is within the standard range, replace the valve guide. For each of upper, middle and lower sections within the sliding range, two measurements, each in crosswise direction must be taken.

TOOL 09900-20205: Micrometer (0-25mm)

Standard

Valve stem O.D. (IN): 4.975-4.990mm
(EX): 4.955-4.970mm

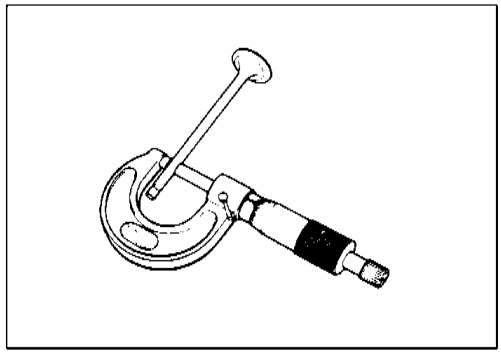

NOTE:

If valve guides have to be replaced, refer to the valve guide servicing.

VALVE GUIDE SERVICING

- Using the valve guide remover ①, drive the valve guide out toward the intake or exhaust camshaft side.

TOOL 09916-44310: Valve guide remover / installer

NOTE:

** Discard the remove valve guide subassemblies.*

** Only oversized valve guides are available as replacement parts. (Part No. 11115-14D71)*

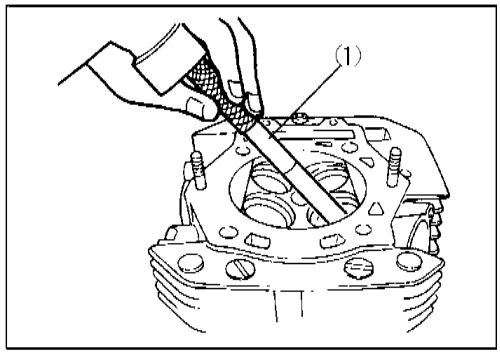

- Re-finish the valve guide holes in the cylinder head using the reamer ② and handle ③.

TOOL 09916-34580: Valve guide reamer
09916-34542: Valve guide reamer handle

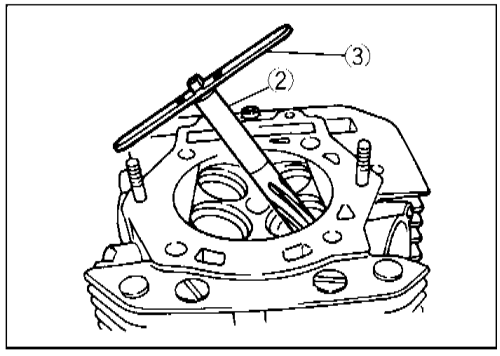

- Apply engine oil to the stem hole of each valve guide and drive the guide into the guide hole using the valve guide installer.

④ Valve guide
⑤ Cylinder head

TOOL 09916-44310: Valve guide remover / installer

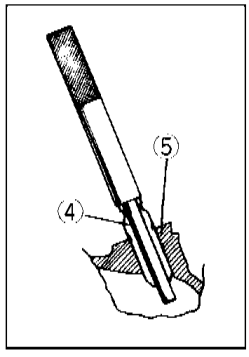

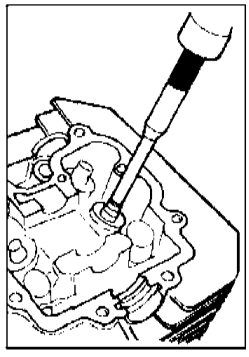

⚠CAUTION

Apply oil to the valve guide hole before driving the new guide into place may result in a damaged guide or head.

- After installing the valve guides, re-finish their guiding bores using the reamer. Be sure to clean and oil the guides after reaming.

TOOL 09916-34570: Valve guide reamer
09916-34542: Valve guide reamer handle

NOTE:

Insert the reamer from the combustion chamber and always turn the reamer handle clockwise.

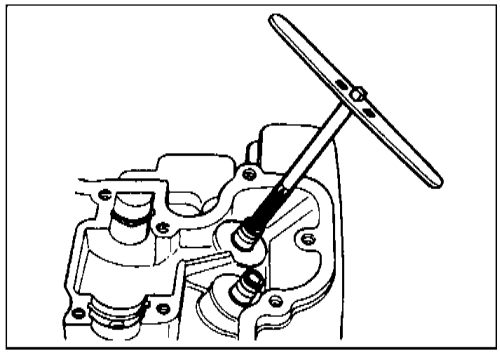

VALVE SEAT WIDTH INSPECTION

Visually check for valve seat width on each valve face.
If the valve face has worn abnomally, replace the valve.
Coat the valve seat with Prussian Blue and set the valve in place. Rotate the valve with light pressure. Check that the transferred blue on the valve face is uniform all around and in center of the valve face.
If the seat width Ⓦ measured exceeds the standard value, or seat width is not uniform reface the seat using the seat cutter.

Valve seat width Ⓦ
Standard: 0.9-1.1mm
Service Limit: Reface if measurement does not agree with standard value.

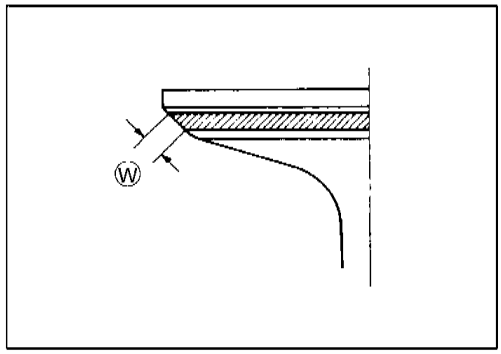

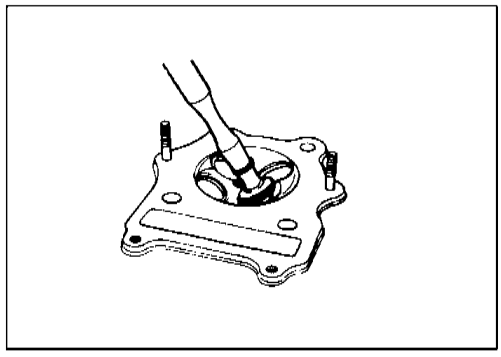

TOOL **09916-10911: Valve lapper set**

VALVE SEAT SERVICING

The valve seats ① for both the intake and exhaust valves are machined to three different angles. The seat contact surface is cut at 45°.

	INTAKE	EXHAUST
45°	N-122	N-122
75°	N-125	N-125
15°	N-121	N-121

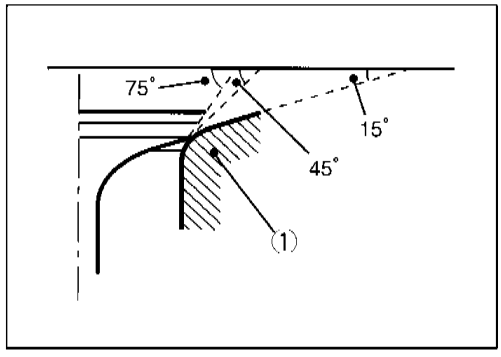

TOOL **09916-21111: Valve seat cutter set**
09916-24820: Valve seat cutter (N-125)
09916-24311: Solid pilot (N-100-5.0)

NOTE:
Use the solid pilot (N-100-5.0) along with the valve seat cutter (N-121, -122, and -125).

NOTE:
The valve seat contact area must be inspected after each cut.

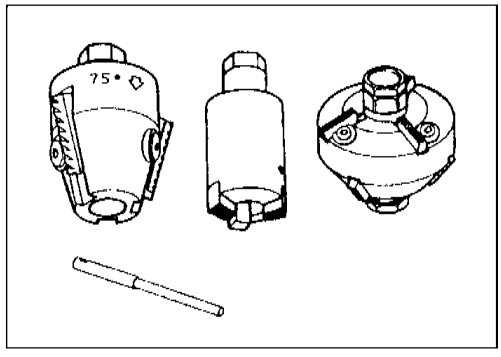

- When installing the solid pilot ①, rotate it slightly. Seat the pilot snugly. Install the 45° cutter, attachment and T-handle.
- Using the 45° cutter, descale and clean up the seat. Rotate the cutter one or two turns.
- Measure the valve seat width after every cut.
- If the valve seat is pitted or burned, use the 45° cutter to condition the seat some more.

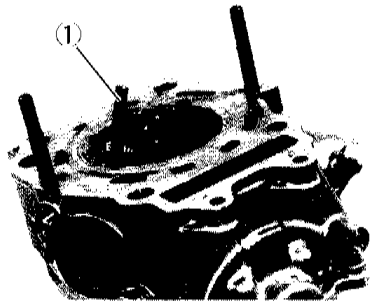

NOTE:

Cut only the minimum amount necessary from the seat to prevent the possibility of the valve stem becoming too close to the rocker arm for correct valve contact angle.

If the contact area is too high on the valve, or if it is too wide, use the 15° / 75° cutter to lower and narrow the contact area.

Contact area too high and too wide on face of valve

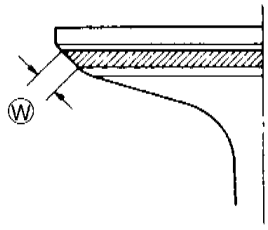

If the contact area is too low or too narrow, use the 45° cutter to raise and widen the contact area.

Contact area too low and too narrow on face of valve

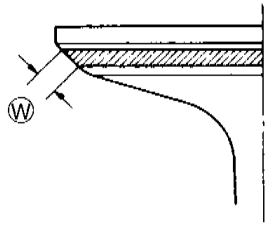

- After the desired seat position and width is achieved, use the 45° cutter very lightly to clean up any burrs caused by the previous cutting operations.

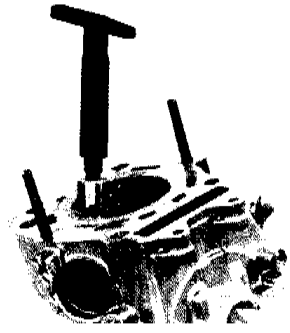

⚠CAUTION

Do not use lapping compound after the final cut is made. The finished valve seat should have a velvety smooth finish but not a highly polished or shiny finish. This will provide a soft surface for the final seating of the valve which will occur during the first few seconds of engine operation.

NOTE:

After servicing the valve seats, be sure to check the valve clearance after the cylinder head has been reinstalled. (See page 2-3.)

VALVE SEAT SEALING CONDITION INSPECTION

With the valve and valve spring assembled, pour a small quantity of gasoline into the intake or exhaust port.
Check that no gasoline leaks though the valve seat. If leakage is found, correct the sealing surface.

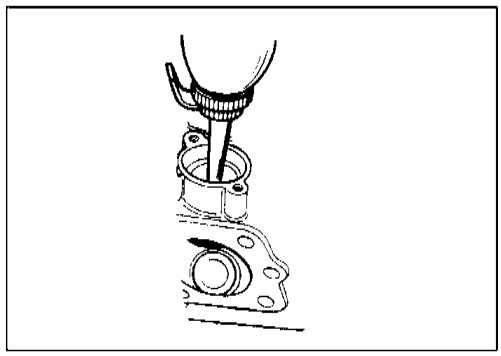

⚠WARNING

Always use extreme caution when handling gasoline.

VALVE STEM END CONDITION

Inspect the valve stem end face for pitting and wear. If pitting or wear is present, resurface the valve stem end. Make sure that the length① is not less than 1.8 mm. If this length becomes less than 1.8 mm, replace the valve.

Service Limit

Valve stem end length: 1.8 mm

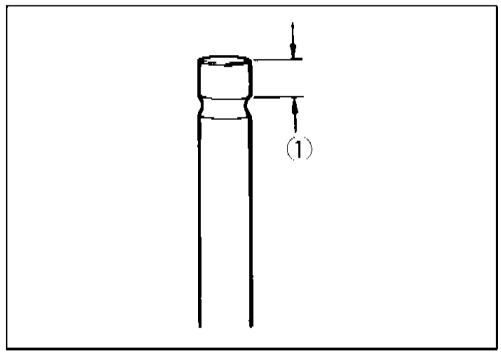

VALVE SPRING INSPECTION

The force of the coil spring keeps the valve seat tight. A weakened spring results in reduced engine power output and often accounts for the chattering noise coming from the valve mechanism.
Check the valve springs for proper strength by measuring their free length and also by the force required to compress them. If the spring length is less than the service limit or if the force required to compress the spring does not fall within the specified range, replace both the inner and outer springs as a set.

TOOL 09900-20102: Vernier calipers

Service Limit

Valve spring free length (IN & EX)

INNER : 34.9 mm

OUTER : 38.2 mm

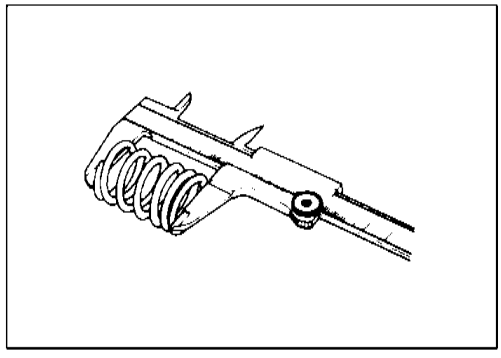

Standard

Valve spring tension (IN & EX)

INNER : 5.3-6.5 kg / 28 mm

OUTER : 13.1-15.1 kg / 31.5 mm

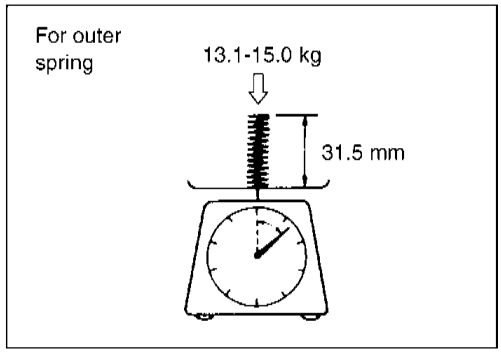

REASSEMBLY

- Apply mixed engine oil / moly paste on the stem seal ① and install it onto the valve guide by hand.

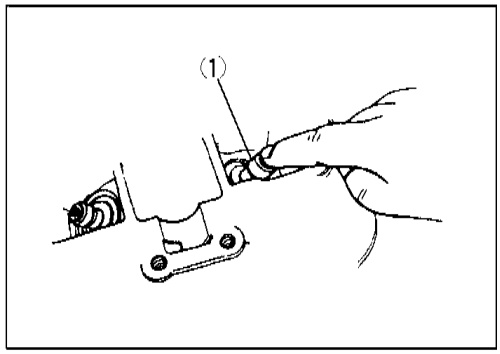

⚠CAUTION

Replace the stem seal with new one.

99000-25140: SUZUKI MOLY PASTE

- With the entire surface of the valve stem coated with mixed engine oil / moly paste, insert the valve ② into the valve guide.

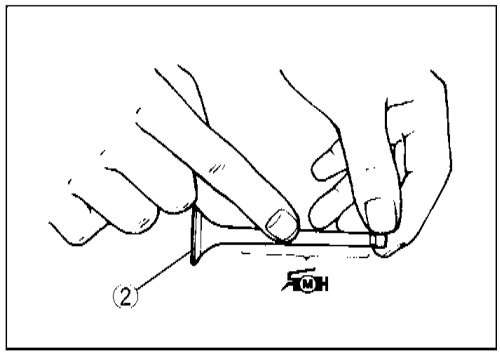

⚠CAUTION

When installing the valve, insert the stem slowly while rotating and taking care not to cause dam age to the oil seal lip.

- Install the spring seat ③, inner valve spring ④, outer valve spring ⑤ and spring retainer ⑥.

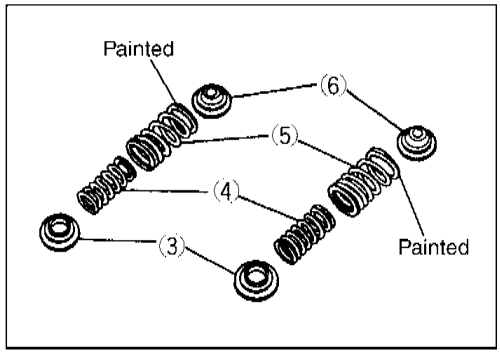

⚠CAUTION

Install the valve spring with the small-pitch side down (facing the cylinder head) and the large-pitch side (painted side) up.

- Compress the valve spring using the valve lifter and the attachment.

09916-14510: Valve lifter
09916-14910: Attachment (φ 22)
09916-84511: Twee zers

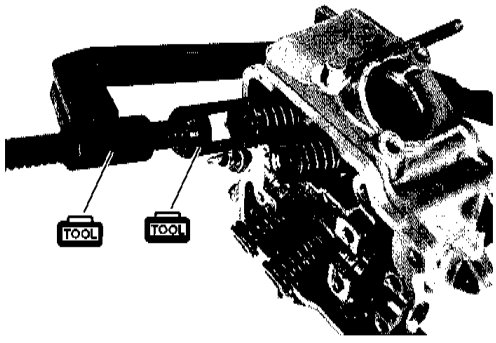

⚠CAUTION

Compressing of the valve spring must be limited to the extent only necessary to prevent the spring from fatigue.

- Install the valve cotter halves ①.

NOTE:

To facilitate assembly, apply a little grease to the valve cotter when fitting into the valve stem groove.

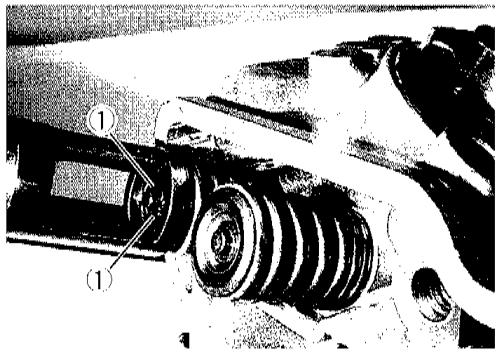

⚠CAUTION

Check that the rounded lip Ⓐ of the cotter is securely fitted in the groove Ⓑ in the valve stem end.

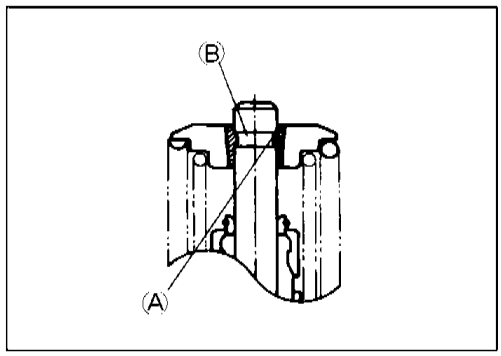

CAMSHAFT

CAM WEAR INSPECTION

Check for abnormal surface damage or wear on the cam face. Measure the cam height Ⓗ with a micrometer. Replace the camshaft if found worn down to the service limit.

Service Limit

Cam height Ⓗ: (IN) 33.13mm (EX) 33.20mm

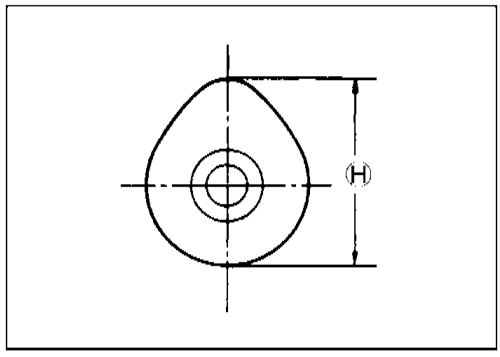

CAMSHAFT JOURNAL WEAR INSPECTION

Place the Plastigauge ① between the camshaft and camshaft holder and tighten the camshaft holder bolt to the speified torque.

Camshaft holder bolt: 10 N · m (1.0kg-m)

NOTE:

Do not rotate the camshaft after the camshaft holder has been tightened with the Plastigauge in place.

Remove the camshaft holder and take the measurement at the widest part of the crashed Plastigauge.

Service Limit

Camshaft jounnal oil clearance: 0.150mm

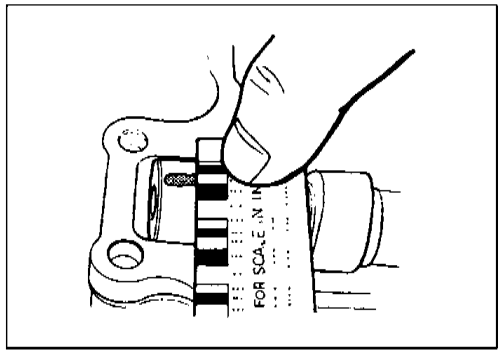

If the clearance exceeds the service limit, measure the inside diameter of camshaft journal holder using a cylinder gauge.

Standard

Camshaft journal holder I.D.:

(ϕ 22) 22.012-22.025mm (ϕ 17.5) 17.512-17.525mm

TOOL 09900-20602: Dial gange (1/1000mm)

09900-22403: Small bore gauge (18-35mm)

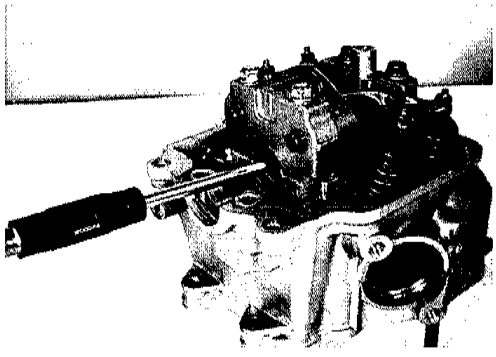

Measure the outside diameter of camshaft journal using a micrometer.

Standard

Camshaft journal O.D.:

(ϕ 22) 21.959-21.980mm (ϕ 17.5) 17.466-17.484mm

TOOL 09900-20205: Micrometer (0-25mm)

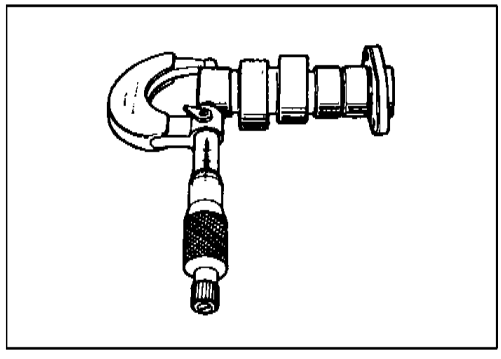

Calculate from the measurement to determine if the clearance falls within the standard range when the camshaft is replaced with new one.If the clearance does not come to the standard range, replace both the camshaft and cylinder head with new ones.

CAMSHAFT RUNOUT

With the camshaft held on the V-blocks, measure the runout with a dial gauge. If the runout exceeds the service limit, replace the camshaft.

Service Limit

Camshaft runout: 0.08mm

TOOL 09900-20606: Dial gauge (1/100mm)
09900-20701: Magnetic stand
09900-21304: V-block set (100mm)

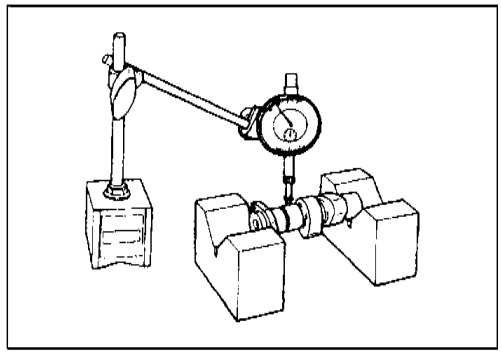

CAM CHAIN TENSIONER ADJUSTER

INSPECTION

Check that the push rod①can slide smoothly with the lock Ⓐ of the ratchet mechanism released. If it does not slide smoothly or the ratchet mechanism is worn or damaged, replace the camchain tensioner adiuster with a new one.

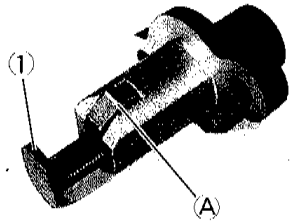

CAM CHAIN TENSIONER

INSPECTION / REASSEMBLY

Check the contacting surface of the cam chain tensioner. If it is worn or damaged, replace it with a new one.

- Install the cam chain tensioner ① on the cylinder head.
- Install the gasket washer ② to the bolt ③, and then tighten it to the specified torque.

Cam chain tensiouer set bolt: 10 N · m (1.0kg-m)

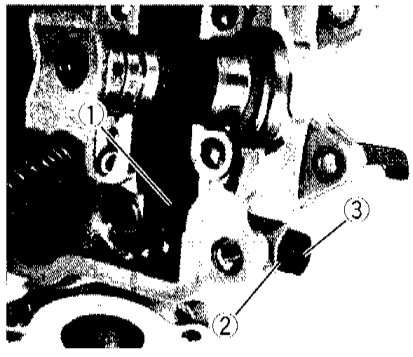

CYLINDER

CYLINDER DISTORTION

Measure the distortion in diagonal directions on the cylinder upper surface. If the distortion exceeds the service limit, replace the cylinder.

Service Limit

Cylinder distortion: 0.05mm

TOOL 09900-20803: Thickness gauge

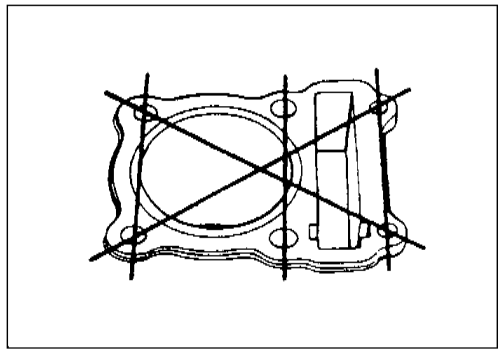

CYLINDER BORE DIAMETER INSPECTION

Check that there is not abnormal surface damage or wear on the cylinder wall.

At three positions, top, middle and bottom, measure the bore diameter. At each position, take two measurements, one parallel with and the other perpendicular to the crankshaft axis.

Cylinder bore

Standard: 73.000-73.015mm

Limit: 73.090mm

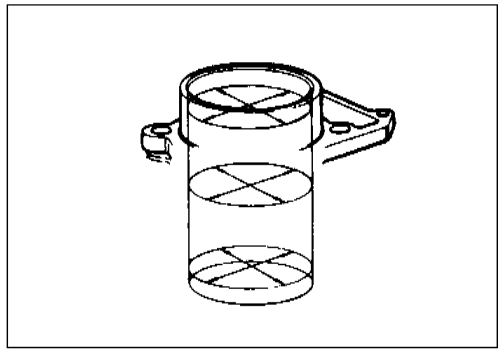

PISTON AND PISTON RING

PISTON DIAMETER INSPECTION

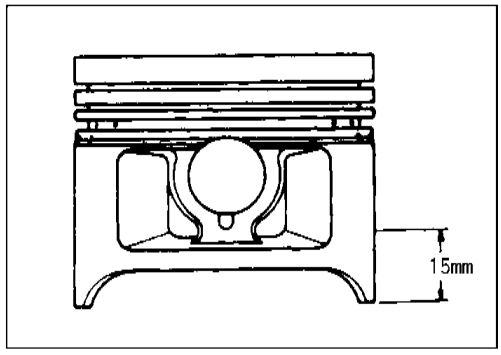

Measure the piston outside diameter in the direction perpendicular to the piston pin axis at the height from the skirt as shown in the illustration using a micrometer.
If the measurement is found less than the service limit, replace the piston.

Piston diameter
Standard: 72.955-72.970mm
Service Limit: 72.880mm
Piston oversize: 0.5, 1.0mm
TOOL 09900-20203: Micrometur (50-70mm)

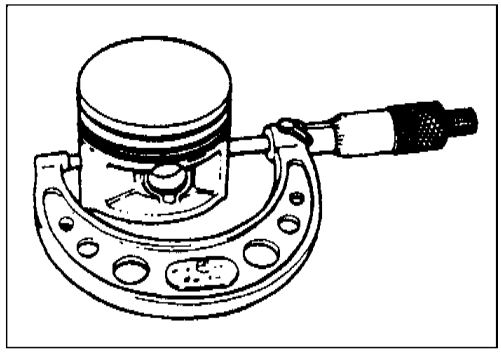

PISTON-TO-CYLINDER CLEARANCE

To determine the piston-to-cylinder clearance, calculate the difference between the cylinder bore and the piston outside diameter.

Piston-to-cylinder clearance
Standard: 0.04-0.05mm
Service Limit: 0.120mm

PISTON PIN BORE

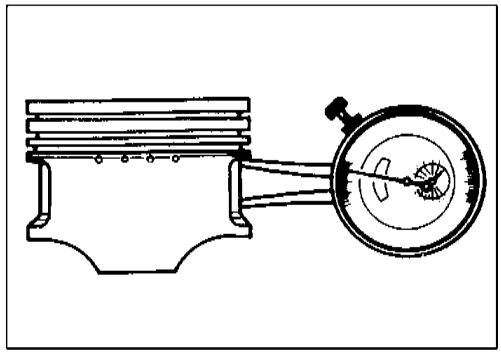

Using a small bore dial gauge, measure the piston pin bore both in the vertical and horizontal directions.
If the measurement exceeds the service limit, replace the piston.

Piston pin bore
Standard: 19.002-19.008mm
Service Limit: 19.030mm
TOOL 09900-20602: Dial gauge (1/1000m, 1mm)
09900-22403: Small bore gauge (18-35mm)

PISTON PIN DIAMETER INSPECTION

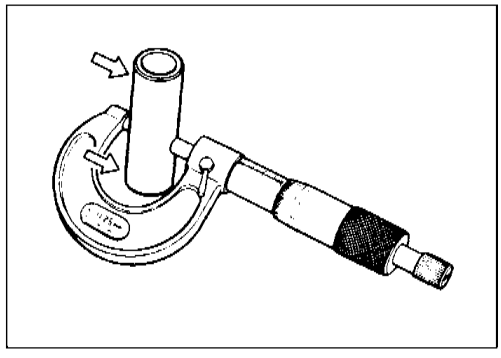

Using a micrometer, measure the piston pin outside diameter at three positions, both the ends and the center.
If any of the measurements is found less than the service limit, replace the pin.

Piston pin O.D.
Standard: 18.996-19.000mm
Service Limit: 18.980mm
TOOL 09900-20205: Micrometer (0-25mm)

PISTON RING FREE END GAP INSPECTION

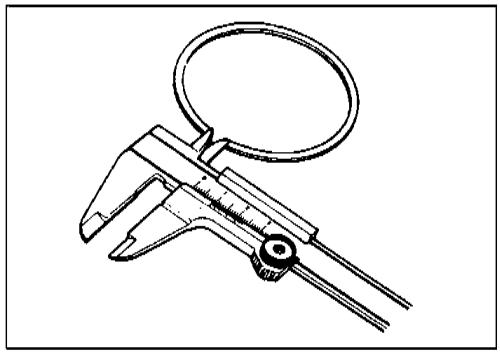

Before installing piston rings, measure the free end gap of each ring using vernier calipers. If the gap is less than the service limit, replace the ring.

Piston ring free end gap

Standard: (1st) Approx. 9.3mm
(2nd) Approx. 7.2mm

Service Limit: (1st) 7.4mm
(2nd) 5.7mm

TOOL 09900-20101: Vernier calipers

PISTON RING END GAP INSPECTION

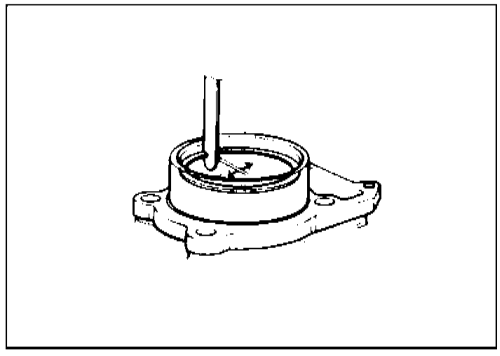

Insert the piston ring squarely into the cylinder using the piston head.

Measure the end gap with a thickness gauge.

If the gap exceeds the service limit, replace the piston ring.

Piston ring end gap

Standard: (1st) 0.10-0.30mm
(2nd) 0.35-0.50mm

Service Limit: (1st) 0.5mm
(2nd)1.0mm

TOOL 09900-20803: Thickness gauge

PISTON RING-TO-GROOVE CLEARANCE INSPECTION

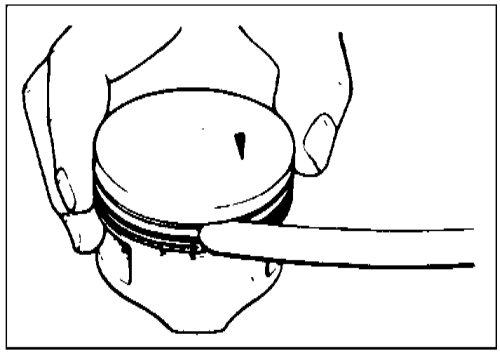

Remove carbon deposit both from the piston ring and its groove.

Fit the piston ring into the groove. With the ring compressed and lifted up, measure the clearance on the bottom side of the ring using a thickness gauge.

Piston ring-to-Groove clearance

Service Limit: (1st) 0.18mm
(2nd)0.15mm

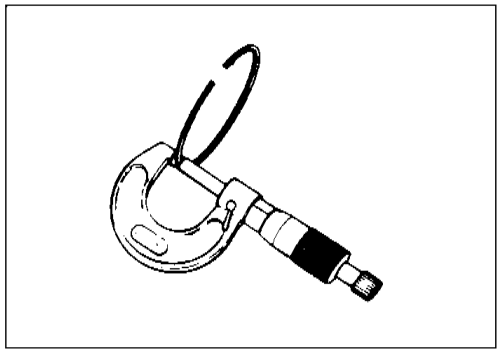

Piston ring groove width

Standard: (1st) 1.01-1.04mm
(2nd) 1.01-1.04mm
(Oil) 2.01-2.03mm

Piston ring thickness

Standard: (1st) 0.97-0.99mm
(2nd) 0.97-0.99mm

CONROD AND CRANKSHAFT

CONROD SMALL END INSIDE DIAMETER INSPECTION

Using a small bore dial gauge, measure the conrod small end inside diameter both in vertical and horizontal directions. If any of the measurements exceeds the service limit, replace the conrod.

Conrod small end I.D.

Standard: 19.006-19.014mm

Service Limit: 19.040mm

TOOL 09900-20602: Dial gauge (1/1000mm, 1mm)
09900-22403: Small bore gauge

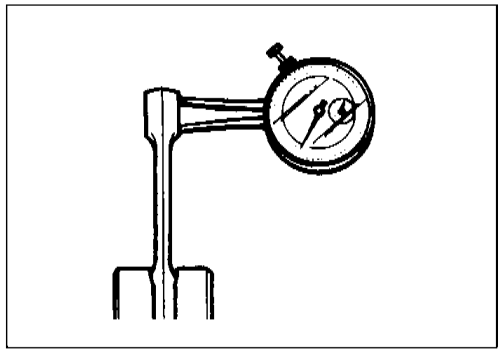

CONROD DEFLECTION INSPECTION

Move the small end sideways while holding the big end immovable in thrust direction.

Measure the amount of deflection.

Turn the conrod and see if it moves smoothly without play and noise.

This method can check the extent of wear on the parts of the conrod's big end.

Conrod deflecition

Service Limit: 3.0mm

TOOL 09900-20701: Magnetic stand
09900-20606: Dial gauge (1/100mm)
09900-21304: V-block

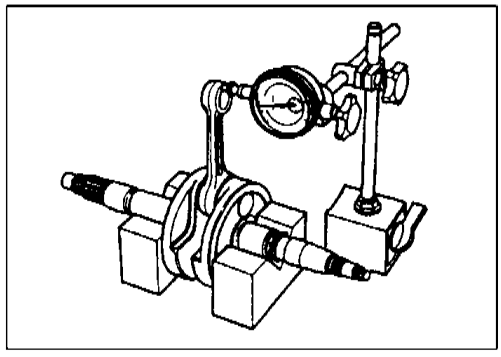

CONROD BIG END SIDE CLEARANCE INSPECTION

Using a thickness gauge, measure the side clearance at the conrod big end. If the measurement is out of standard value, measure the conrod big end and the crank pin widths individually to determine which one is to be replaced.

Conrod big end side clearance

Standard: 0.10-0.65mm

Service Limit: 1.00mm

TOOL 09900-20803: Thickness gauge

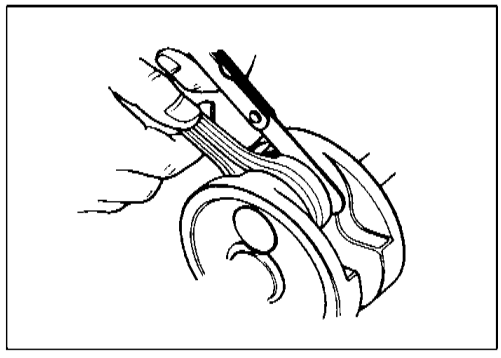

CRANKSHAFT RUNOUT INSPECTION

With the right and left crank journals supported with V-block, turn the crankshaft slowly. At this time, measure the crankshaft end runout using a dial gauge. If the runout exceeds the service limit, replace the crankshaft.

Crankshaft runout

Service Limit: 0.08mm

TOOL 09900-20701: Magnetic stand
09900-20606: Dial gauge (1/100mm)
09900-21304: V-block

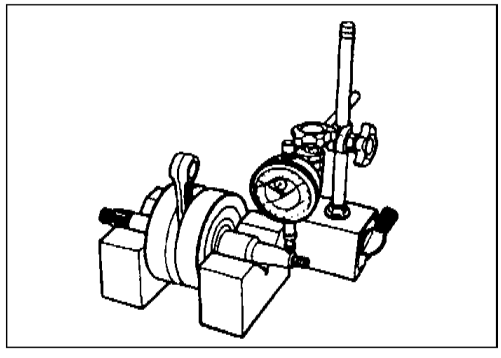

MOVABLE DRIVE FACE

OIL SEAL INSPECTION

- Remove the spacer.

Check if any damage exists on the lip of oil seal.
If any defects are found, replace the oil seal with a new one.

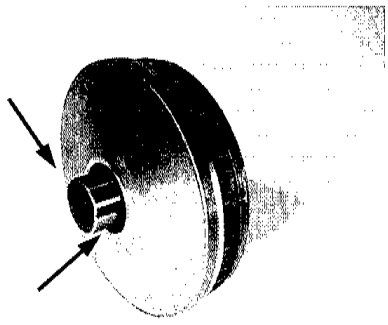

MOVABLE DRIVE FACE INSPECTION

Check the drive face for any abnormal condition such as stepped wear or discoloration caused by burning.
If any defeets are found, replace the movable drive face with a new one.

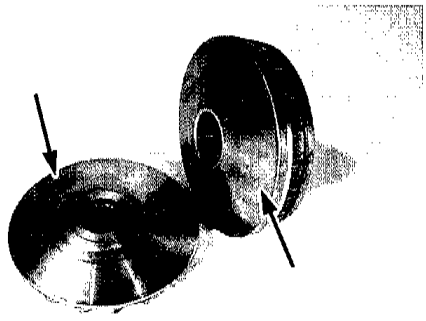

DISASSEMBLY

- Remove the movable drive face cover ①.

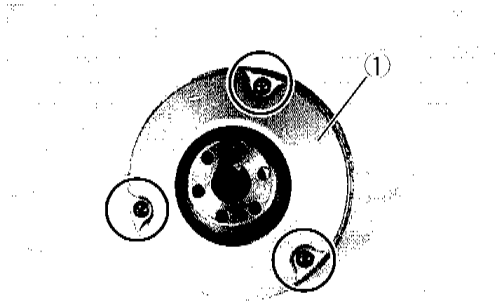

- Detach the movable drive face plate ②.
- Pull out the six rollers ③.
- Remove the oil seals ④ and ⑤.

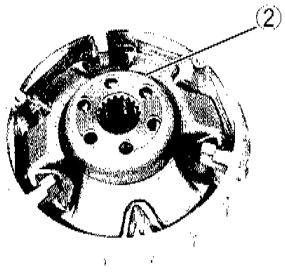

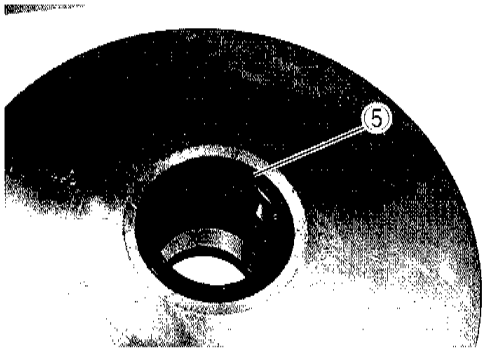

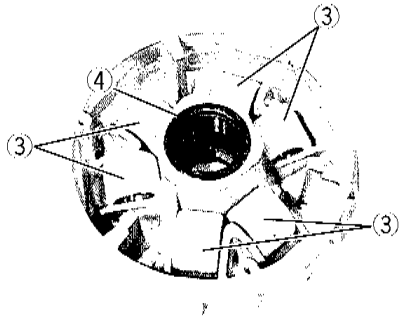

ROLLER INSPECTION

Check that there is no abnormal wear or damage on the roller. Measure the diameter of roller with a vernier calipers. If the outside diameter measured is less than the standard value, replace the rollers as a set.

Standard: 23.72-23.88mm

09900-20102: Vernier calipers

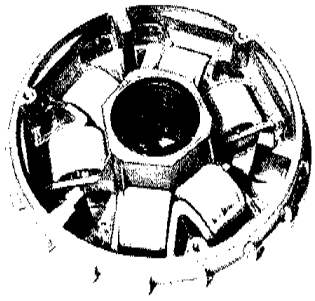

REASSEMBLY

NOTE:

Carry out the assembly procedure in the reverse order of disassembly while observing the following instructions.

- Apply a small amount of grease to the bore and oil seal lip.

99000-25010: SUZUKI SUPER GREASE "A"

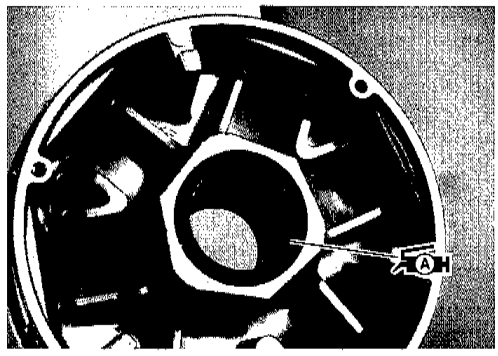

⚠CAUTION

Wipe off excess grease thoroughly.

- Position the six rollers ① on the movable drive face.
- Mount the damper ③ on the movable drive face plate ②.
- Position the movable drive plate on the movable drive face.

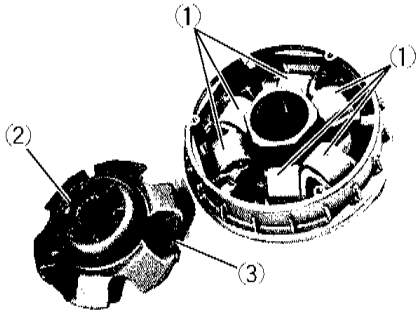

- Install the movable drive face cover ④.
- Install the spacer.

⚠CAUTION

Press down the movable drive face plate so as not to cause the roller to come out of the position when inserting the spacer..

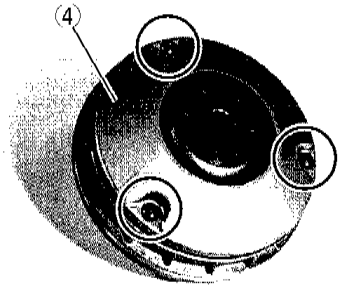

NOTE:

For installation onto the engine, refer to page 3-63.

CLUTCH SHOE / MOVABLE DRIVEN FACE

DISASSEMBLY / INSPECTION

- Lock the clutch shoe by engaging the dogs Ⓐ of the special tool with three holes in the clutch shoe and hold the clutch shoe assembly with the special tool handle turned in.
- Loosen and remove the clutch shoe nut ①.

09922-31410: Clutch spring compressor

09924-52410: Socket wrench

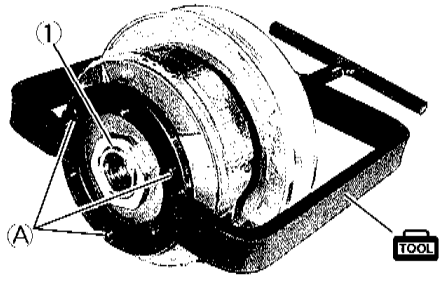

⚠CAUTION

Since a high spring force applies to the clutch shoe assembly, care must be used so as not to cause the clutch shoe assembly and movable driven face to come off abruptly.

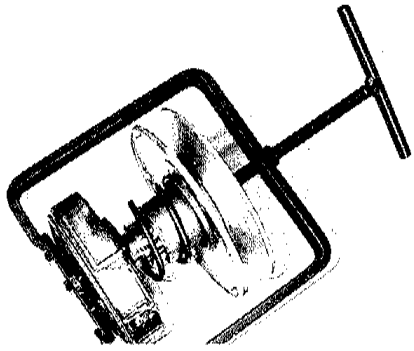

- Loosen the special tool handle slowly and remove the clutch shoe assembly.

⚠CAUTION

Do not attempt to disassemble the clutch shoe assembly.

- To remove the movable driven face seat ①, use a thin brade screwdriver.

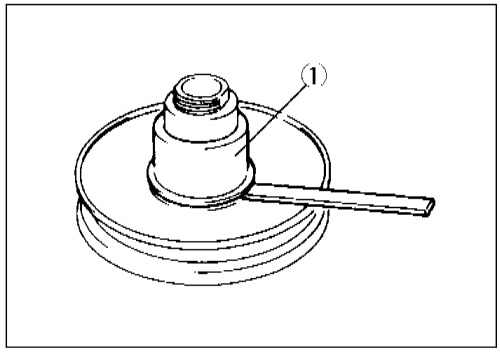

- Remove four pins ② together with rollers ③.
- Remove the movable driven face④ from the fixed driven face ⑤.

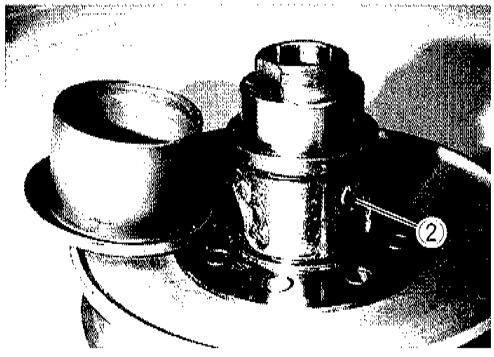

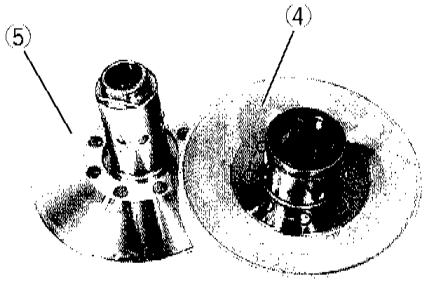

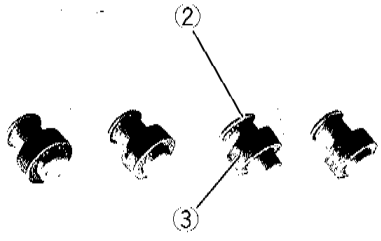

⚠CAUTION

Do not reuse the o-rings ① to prevent grease leakage.
The removed oil seals, ② and ③, should be replaced with new ones.

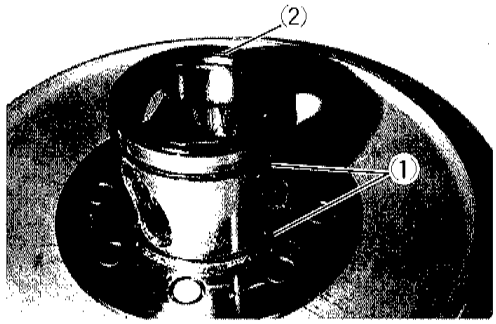

Check if any damage exists on the lip of oil seals ② and ③. If any defects are found, replace the oil seals with new ones.

- Remove the O-rings ① and oil seals ② and ③.

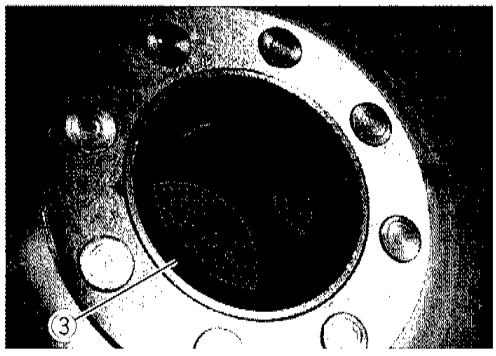

- Drive out the needle roller bearing ④ using a steel rod.

NOTE:
If abnormal noise does not occur, it is not necessary to remove the bearing.

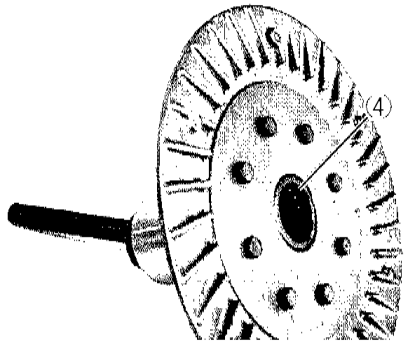

- Remove the circlip ⑤.
- Remove the bearing ⑥ using the special tool.

TOOL 09943-88211: Bearing installer

NOTE:
If abnormal noise does not occur, it is not necessary to remove the bearing.

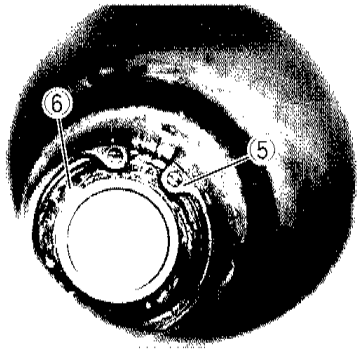

⚠CAUTION

The removed bearings, ④ and ⑥, should be replaced with new ones.

CLUTCH SHOE INSPECTION

Check the boss and centrifugal weight fulcrum sections for looseness, damage and operation.
Check the clutch shoe for damage and fouling with oil on the surface.

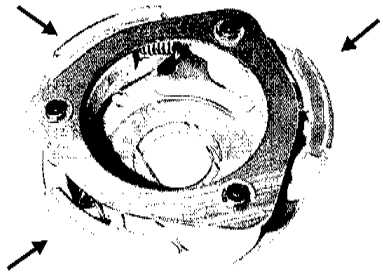

Measure the thickness of clutch shoe at the center position. If the thickness is smaller than the service limit, replace the shoe assembly with a new one.
Service Limit: 2.0mm
TOOL 09900-20102: Vernier caliper

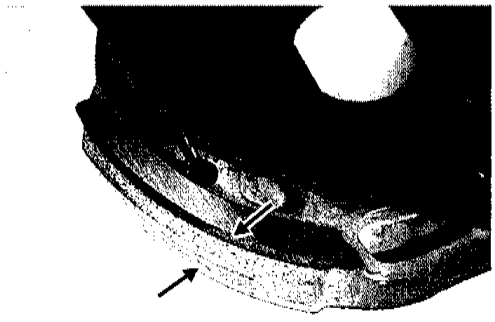

CLUTCH HOUSING INSPECTION

Check for any abnormal surface damage.
Measure the inside diameter of the clutch housing.
If the measurement exceeds the service limit, replace the housing with a new one.
Service Limit: 135.5mm

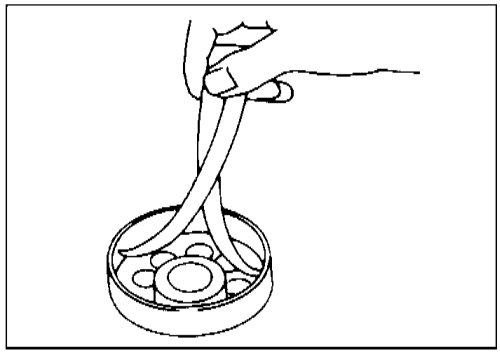

MOVABLE DRIVEN FACE SPRING INSPECTION

Measure the spring free length using the vernier calipers.
If the length is shorter than the service limit, replace the spring with a new one.
Service Limit: 99.9mm
TOOL 09900-20102: Vernier calipers

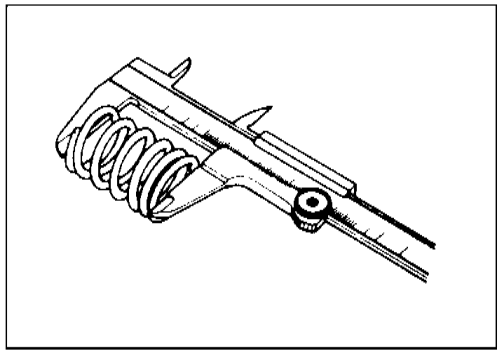

DRIVE V-BELT INSPECTION

Check that the V-belt is free from any greasy substance.
Check the contact surface for crack or other damage.
Measure the width of the belt using the vernier calipers.
If the measurement exceeds the service limit or crack or other damage exists, replace the belt with a new one.
Service Limit: 21.7mm
TOOL 09900-20102: Vernier Calipers

⚠CAUTION

If grease or oil is present on the surface, degrease the belt thoroughly.

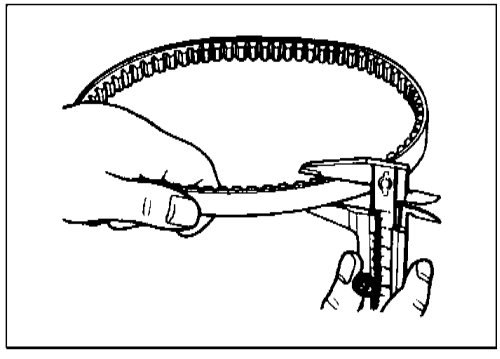

REASSEMBLY

NOTE :

To assemble the clutch shoe assembly, reverse the sequence of the disassembly procedures taking care of the following instructions.

- Install the bearing ② to the fixed driven face ①.
- Install the circlip ③.

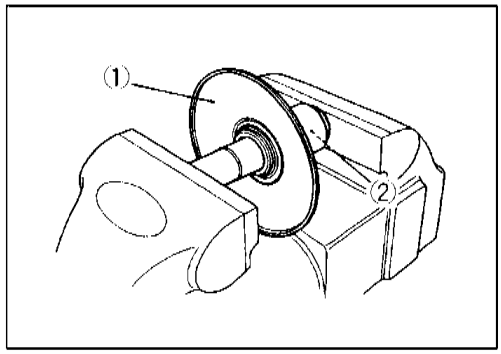

⚠CAUTION

Position the sealed side of the bearing toward out side.

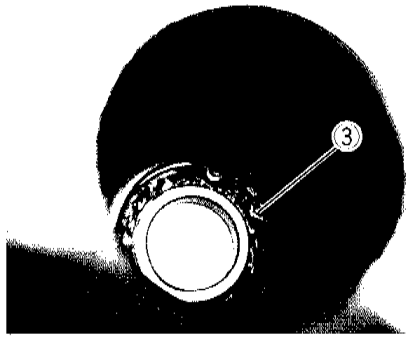

- Fit the needle bearing ①.

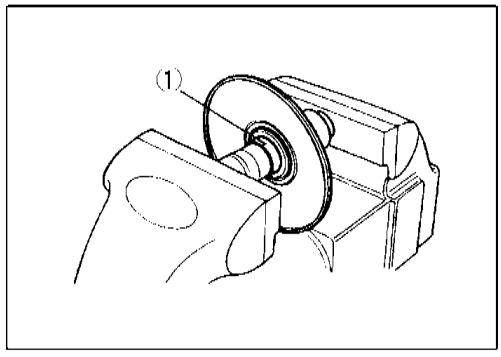

⚠CAUTION

Position the needle bearing with its punch mark outside.
Apply sufficient grease both to the grease groove and needle bearing inside the fixed driven face.

99000-25010: SUZUKI SUPER GRESE"A"

- Install the new oil seals ③ and ④ to both sides of the movable driven face ②.

09913-76010: Bearing installer

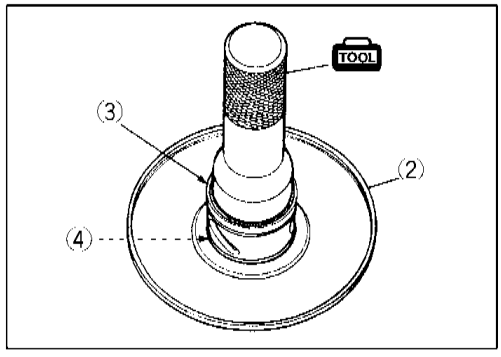

⚠CAUTION

- **Position the stamped code side outside.**
- **Apply sufficient grease to both the oil seal lips all around and the grease groove inside the movable driven face.**

99000-25010: SUZUKI SUPER GRESE"A"

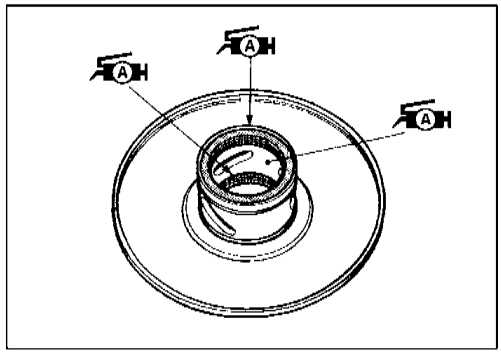

- Install the movable driven face ① onto the fixed driven face ②.

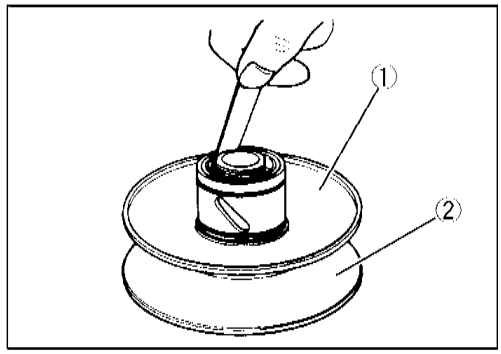

⚠CAUTION

To prevent the oil seal lip from damaged during installation, slide the lip using a piece of 0.1mm-thick steel sheet as a guide.

- Install the new O-rings ③ and ④.
- Install the pin ⑤ to the pin hole with the roller ⑥ fitted.
- Apply a small amount of grease to the O-ring and the pin hole.

Ⓐ 99000-25010: SUZUKI SUPER GREASE "A"

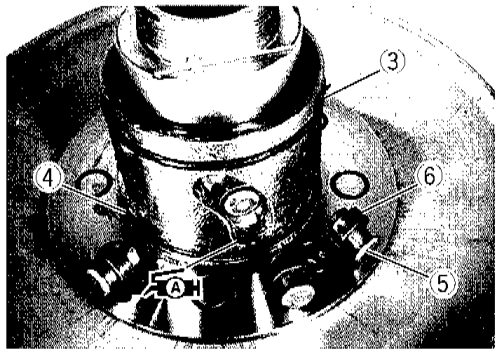

- Install the movable driven face seat ① securely.

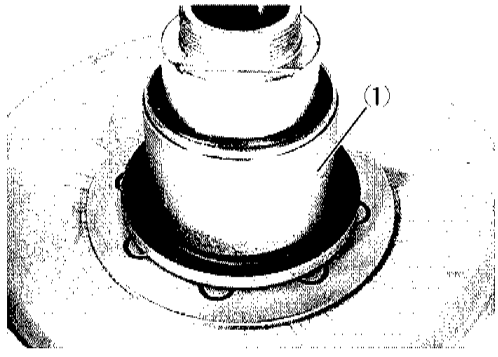

- Install the spring ③ and clutch shoe assembly ④ onto the movable driven face ② and attach the special tool.

TOOL 09922-31410: Clutch spring compressor

NOTE:

Lock the three holes in the clutch shoe plat Ⓐ by engaging the dogs Ⓑ of the special tool.

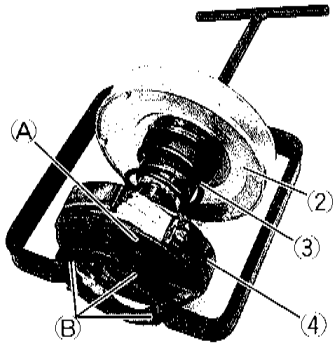

- Slowly turn the special tool handle to tighten and align the flats Ⓒ at the movable driven face end with clutch shoe plate hole Ⓓ.

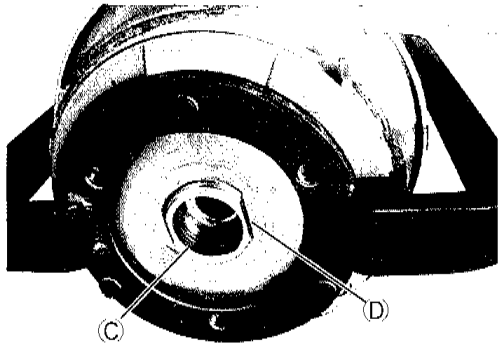

- Check that the special tool dogs are engaged with the clutch shoe plate holes and screw the clutch shoe nut ⑤.
- Tighten the nut ⑤ to the specified torque.

TOOL 09924-52410: Socket wrench

Clutch shoe nut: 78 N · m (7.8kg-m)

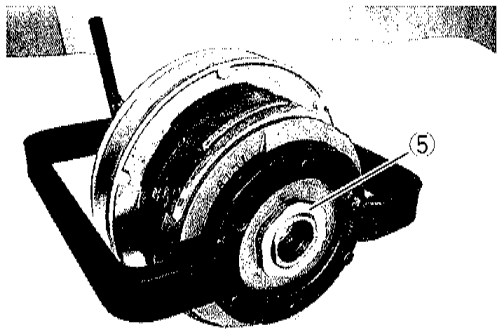

TRANSMISSION COVER BEARING AND OIL SEAL

DISASSEMBLY / INSPECTION

- Remove the driveshaft ② from the transmission cover ① by tapping with a plastic mallet.
- Remove the O-ring ③.

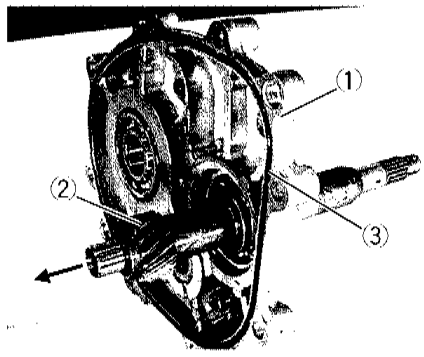

- Remove the oil seal ④ using the special tool.

TOOL 09913-50121: Oil seal remover

⚠CAUTION

Replace the removed oil seal with a new one.

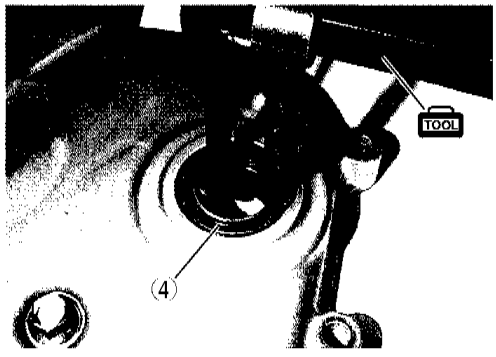

- Using the special tools, remove the bearings ⑤ and ⑥.

TOOL 09913-75821: ⑤ Bearing installer
09923-74510: ⑥ Bearing remover
09930-30102: Sliding shaft

NOTE:
If abnormal noise does not occur, it is not necessary to remove the bearing.

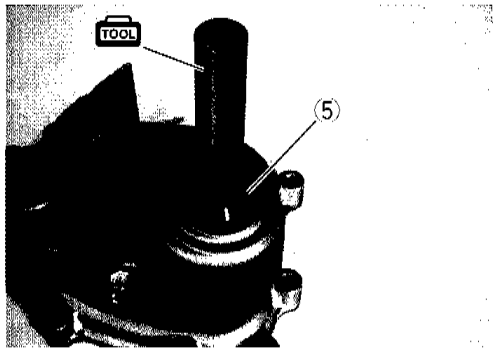

⚠CAUTION

The removed bearings, ⑤ and ⑥, should be replaced with new ones.

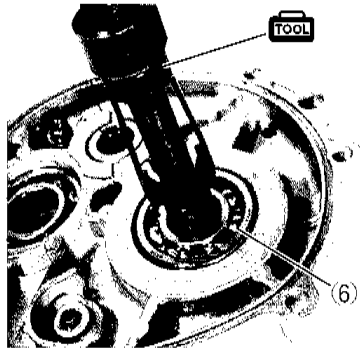

- Remove the magnet ⑦.
- Clean the magnet with a cleaning solvent.

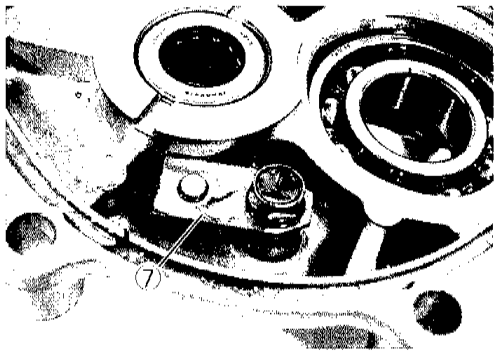

- Remove the drain plug ①, oil level plug ② and oil filler plug ③.

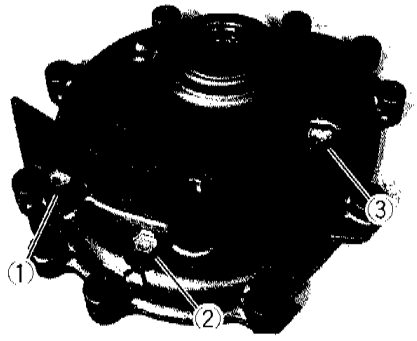

REASSEMBLY

NOTE:

Carry out the assembly procedure in the reverse order of disassembly while observing the following instructions.

- Using the special tools, install the bearings ④, ⑤ and ⑥.

TOOL 09913-75520: ④ Bearing installer
09951-16080: ⑤ Bearing installer
09913-75821: ⑥ Bearing installer

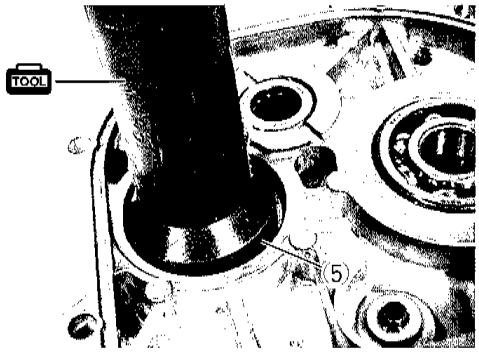

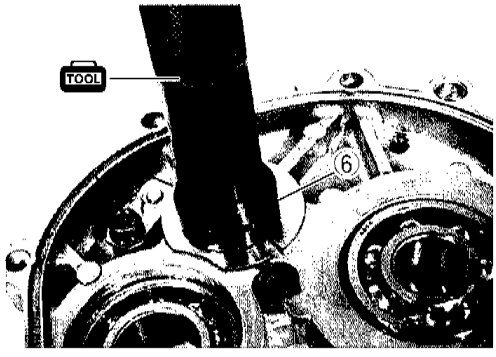

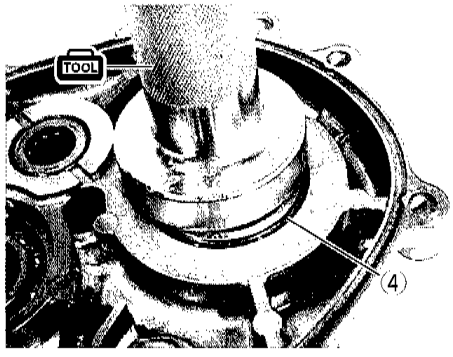

- Install the oil seal ⑦.

TOOL 09913-75830: Bearing installer

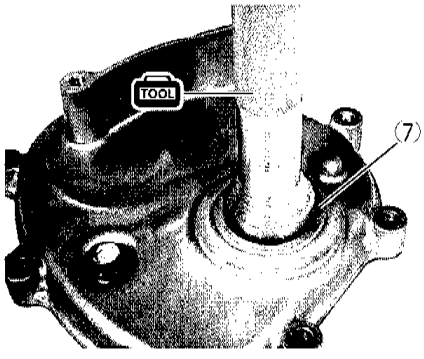

- Tighten the oil drain plug with gasket washer⑧, oil level plug with washer⑨, and oil filler plug with gasket washer ⑩.

Oil drain bolt: 12 N · m(1.2 kg-m)
Oil level bolt: 12 N · m(1.2 kg-m)
Oil filler bolt: 23 N · m (2.3 kg-m)

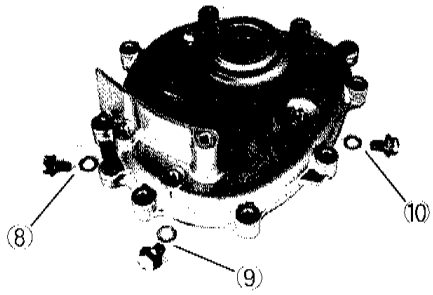

IDLE GEAR

DISASSEMBLY

- Remove the circlip ①.
- Remove the idle gear ②.

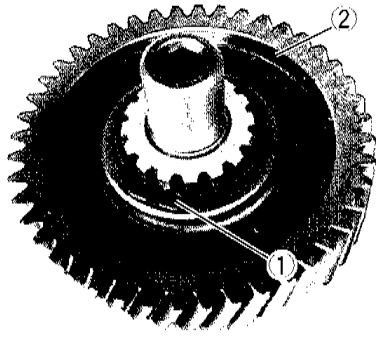

- Remove the circlip ③.
- Remove the idle shaft ④.

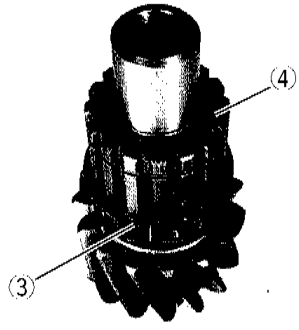

REASSEMBLY

NOTE:

Carry out the assembly in the reverse order of disassembly procedures.

FINAL DRIVEN GEAR

DISASSEMBLY

- Remove the circlip ①.
- Slide out the final driven gear ②.

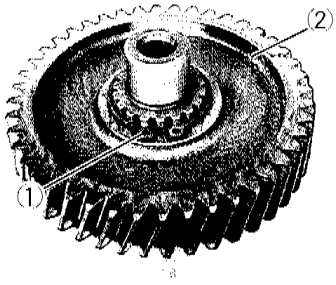

- Remove the circlip ③.
- Remove the rear axle shaft ④.

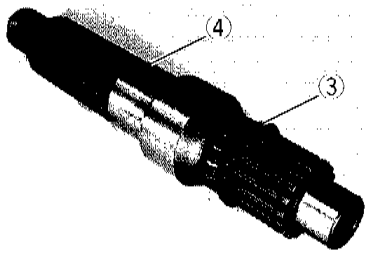

REASSEMBLY

NOTE:

Carry out the assembly procedure in the reverse order of disassembly while observing the following instructions.

- Assemble the final driven gear with the thicker flange side Ⓐ facing inside.

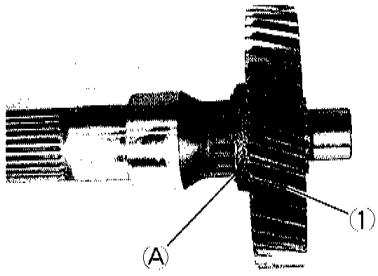

BALANCER DRIVEN GEAR

DISASSEMBLY

- Remove the circlip ①.
- Remove the spring washer ②.
- Remove the washer ③.

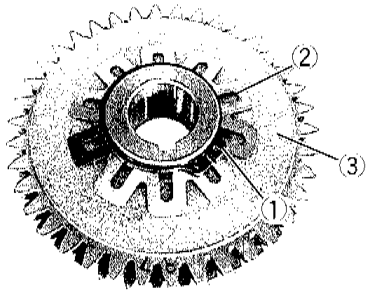

- Take out the springs ④.
- Remove the scissors gear ⑤.

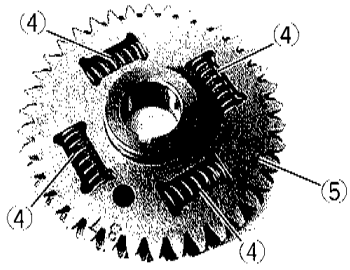

REASSEMBLY

NOTE:

Carry out the assembly procedure in the reverse order of disassembly while observing the following instructions.

- Assemble the scissors gear with its stamp mark side ⓐ facing inside.
- When assembling, align the balancer driven gear hole Ⓐ with the scissors gear hole Ⓑ.

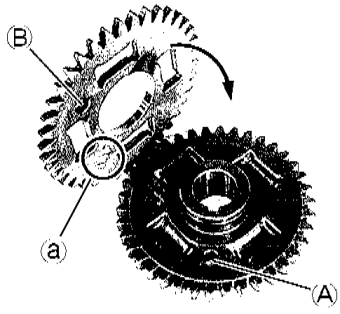

- Insert the springs ①.

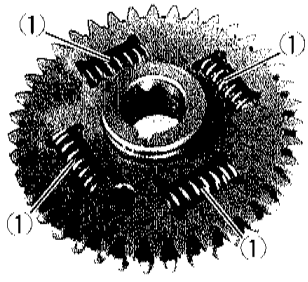

- Install the washer②and spring washer③, then fix them with the circlip④.

⚠CAUTION

Install the spring washer③with the convex side facing outside.

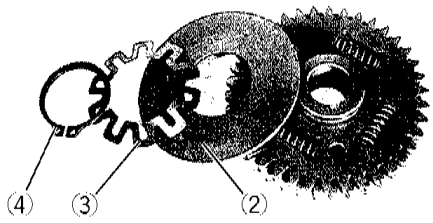

STARTER CLUTCH

INSPECTION OF STARTER CLUTCH OPERATION

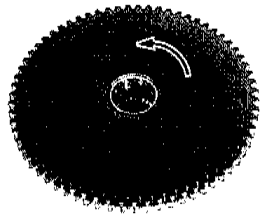

Turn the starter driven gear by hand in the direction of arrow as shown and check that rotation is smooth. Also check that the gear is locked when attempted to turn in the other direction.

If a large resistance is felt or noise occurs when turning the gear, check the starter driven gear sliding surface for wear or damage.

If any abnormal condition is found, replace the starter clutch with a new one.

DISASSEMBLY

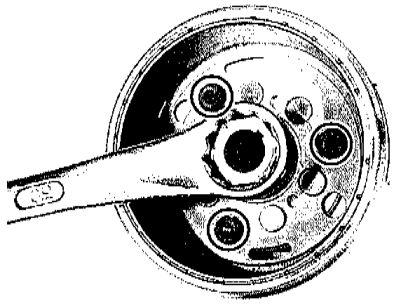

- With the rotor held with a wrench, loosen the starter clutch bolt.

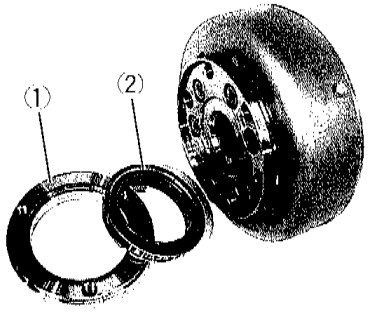

- Remove the one-way clutch guide①and one-way clutch ② from the rotor.

REASSEMBLY

NOTE:

Carry out the assembly procedure in the reverse order of disassembly while observing the following instructions.

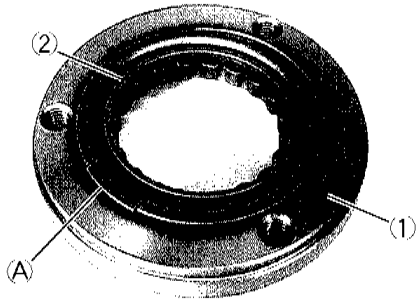

- When inserting the one-way clutch ② into the one-way clutch guide①, the flange side Ⓐ must be positioned on the rotor side.

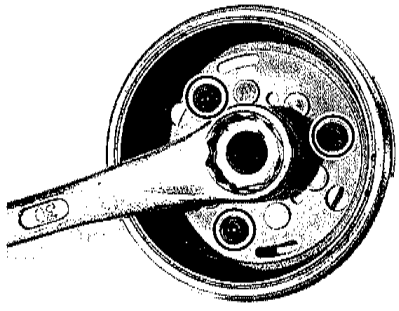

- Apply THREAD LOCK"1322" on the starter clutch bolts and tighten them to the specified torgne.

Starter clutch bolt: 25 N · m (2.5kg-m)

99000-32110: THREAD LOCK SUPER "1322"

GENERATOR / BEARING / OIL SEAL

DISASSEMBLY / INSPECTION

- Remove the generator stator ①, signal generator ② and lead wire guide ③.

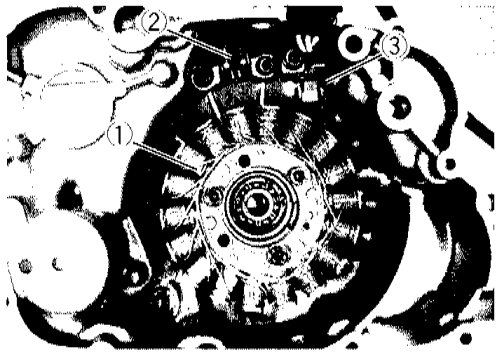

- Remove the circlip ④.
- Remove the bearing ⑤.

TOOL 09921-20210: Bearing remover
09930-30102: Sliding shaft

NOTE:
If abnormal noise does not occur, it is not necessary to remove the bearing.

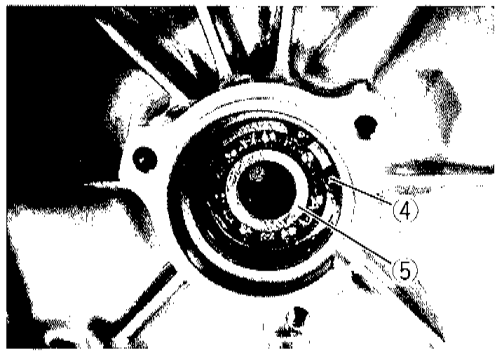

⚠CAUTION

The removed bearing ⑤ should be replaced with a new one.

- Remove the oil seal ⑥.

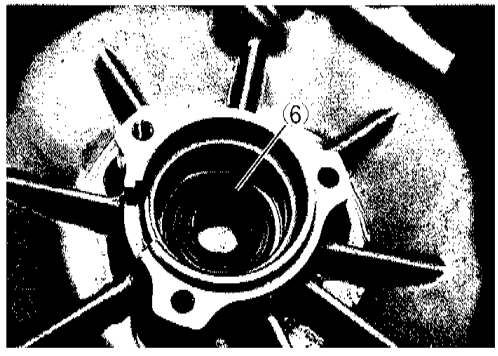

⚠CAUTION

Replace the removed oil seal with a new one.

REASSEMBLY

NOTE:

Carry out the assembly procedure in the reverse order of disassembly while observing the following instructions.

- Install the oil seal ①.

TOOL 09913-75821: Bearing installer

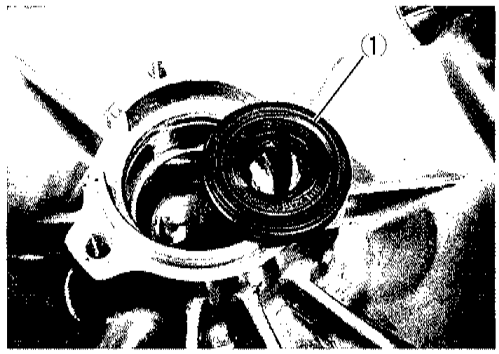

▲CAUTION

Install the oil seal with the marked code toward outside.

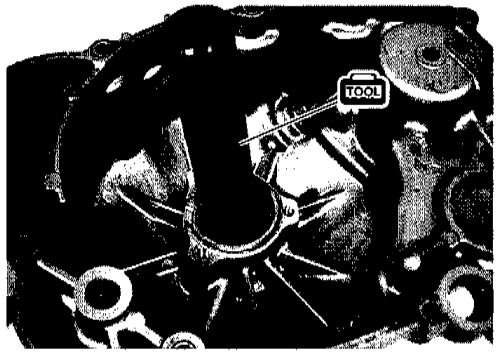

- Using the special tool, install the bearing ②.

TOOL 09913-75821: Bearing installer

- Install the circlip.

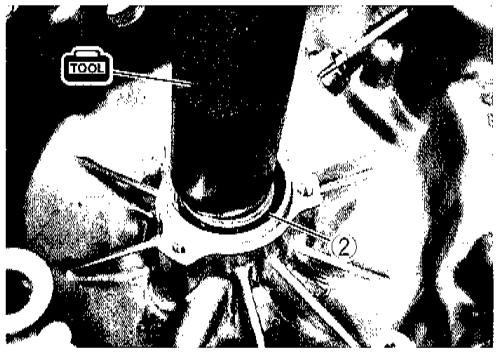

- Tighten the generator stator bolts ③ to the specified torque.

Generator coil bolt: 10 N · m (1.0kg-m)

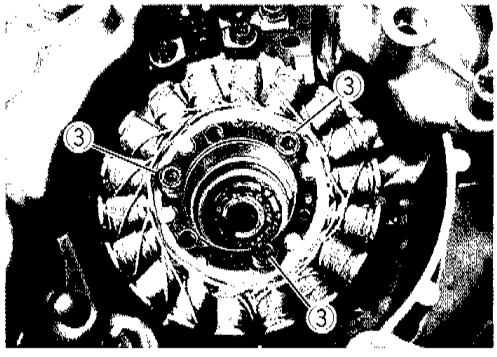

- Tighten the signal generator bolts ④ to the specified torque.

Signal generator bolt: 5 N · m (0.5kg-m)

- Tighten the lead wire guide bolt ⑤ to the specified torque.

Lead wire guide bolt: 10 N · m (1.0kg-m)

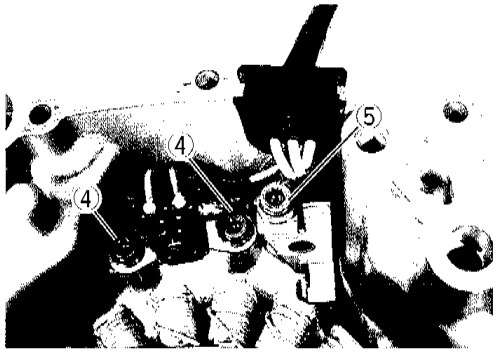

ENGINE REASSEMBLY

The engine reassembly can be performed in the reverse order of disassembly procedures. However, the following points must be observed in the reassembly operation.

⚠CAUTION

- **Make sure to coat the rotating and sliding sections with engine oil.**
- **Care must be taken so that the drive belt, drive face and driven face are completely free from oil and grease.**

CRANKCASE / CRANKSHAFT

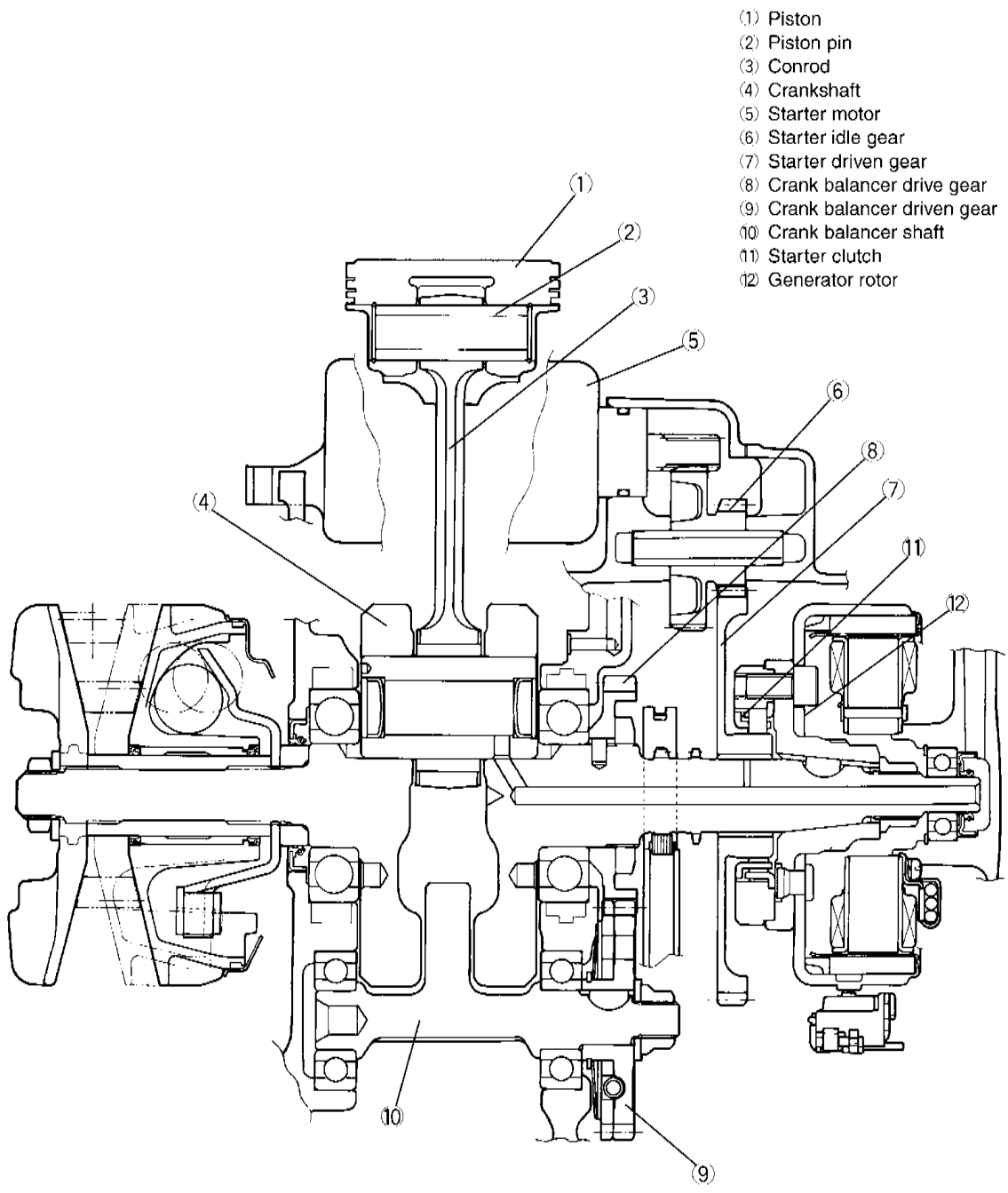

LEFT CRANKCASE

- Drive in the bearings ① and ②.

TOOL 09913-75510: Bearing installer (For ①)
09913-75810: Bearing installer (For ②)

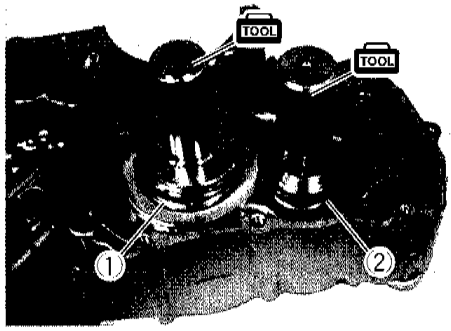

RIGHT CRANKCASE

- Drive in the bearings ① and ②.

TOOL 09913-75510: Bearing installer (For ①)
09913-75810: Bearing installer (For ②)

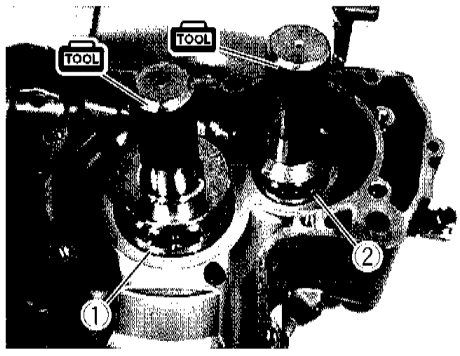

- Drive in the oil seal ③.

TOOL 09913-75810: Bearing installer

- Apply grease on the lip of oil seal.

99000-25010: SUZUKI SUPER GREASE"A"

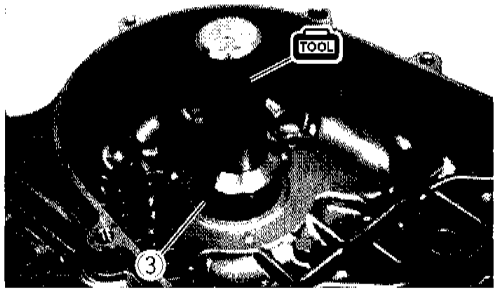

- Drive in the bearings ④ and ⑤.

TOOL 09913-84510: Bearing installer (For ④)
09925-98221: Bearing installer (For ⑤)

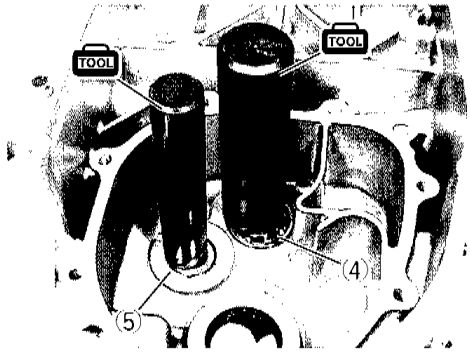

- Drive in the oil seal ⑥.

TOOL 09913-75810: Bearing installer

- Apply grease on the lip of oil seal.

99000-25010: SUZUKI SUPER GREASE"A"

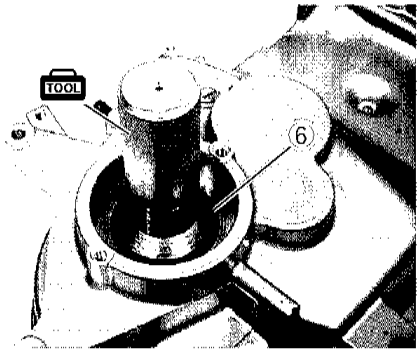

- Drive in the bearing ①.

TOOL 09913-75510: Bearing installer

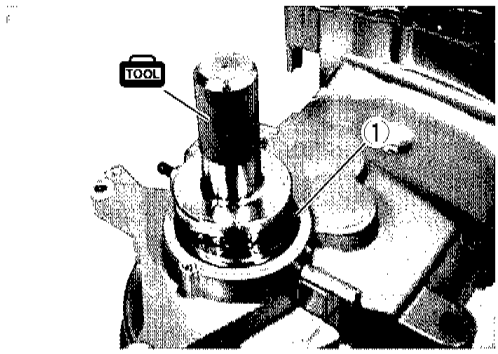

- Install the bearing retainer ②.

NOTE:

Install the bearing retainer toward the upper side of the bearing.

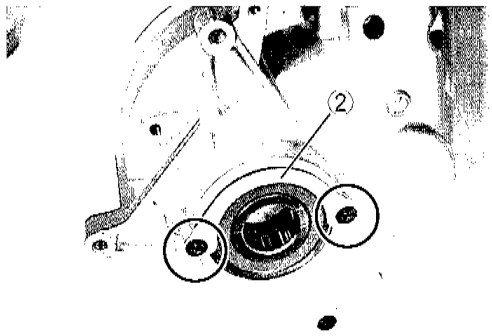

- Using a vice and a tube of appropriate size for outside diameter of the mounting bushing ③, press in the bushing.

⚠CAUTION

Press in the mounting bushing so that the end of outside shell becomes flush with the inside face of crankcase.

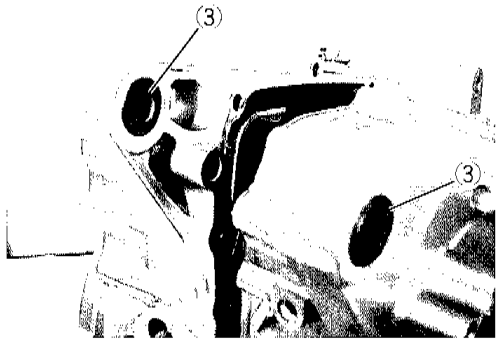

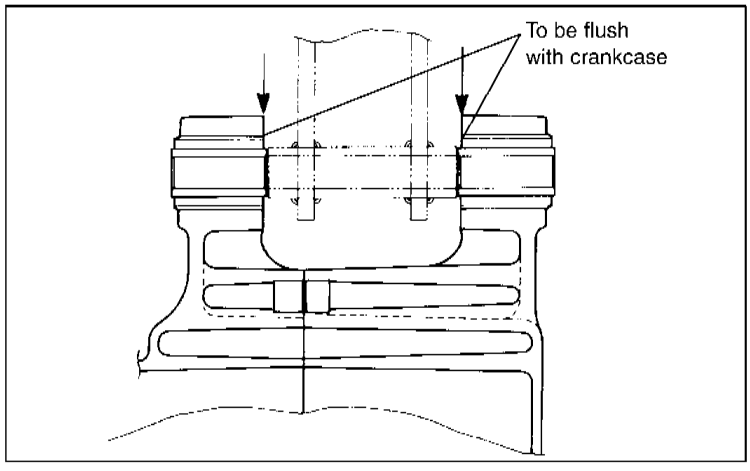

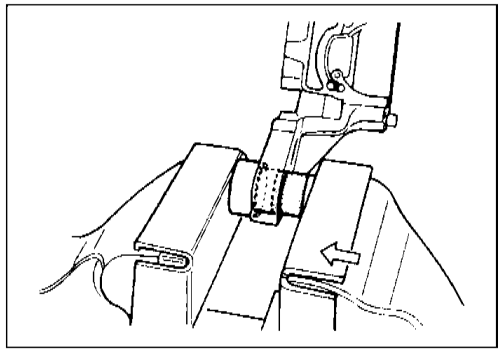

- Fit the O-ring ⑤ to the oil nozzle ④.
- Install the oil nozzle ④.

NOTE:

Before installing the oil nozzle, check or clean its oil passage.

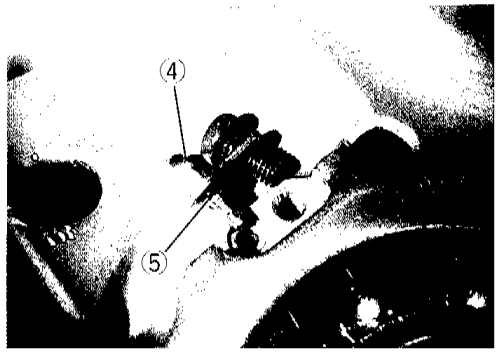

- Decide the width between the webs referring to the figure below when rebuilding the crankshaht.

STD width between webs: 60.0 ± 0.1mm

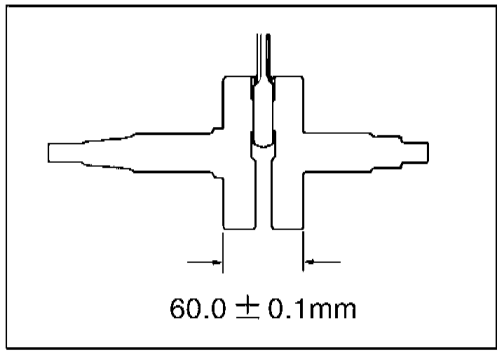

CRANKSHAFT

- Using the special tool, press in the crankshaft into the left crankcase.

NOTE:

Fit steel plates between the crankcase and the special tool when installing the crankshaft with the special tool.

TOOL 09910-32812: Crankshaft installer
09910-32840: Attachment

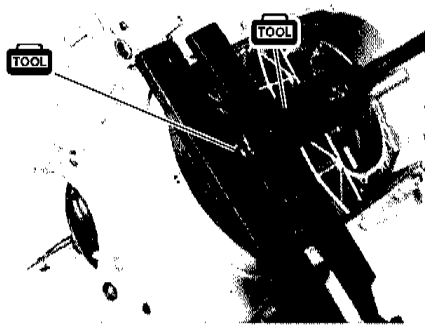

⚠CAUTION

- **Do not hit the crankshaft with a plastic hammer or the like to install it into the crankcase.**
- **Be careful not to cause damage to the oil seal lip when pressing the crankshaft into the crankcase.**

BALANCER SHAFT

- Install the balancer shaft ①.

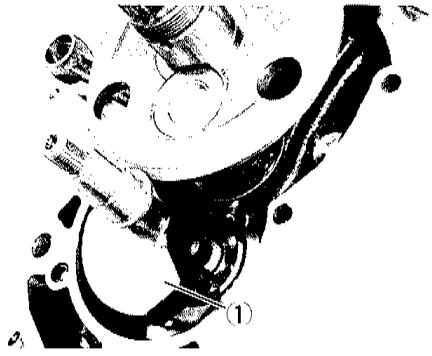

O-RING

- Fit the O-ring ①.

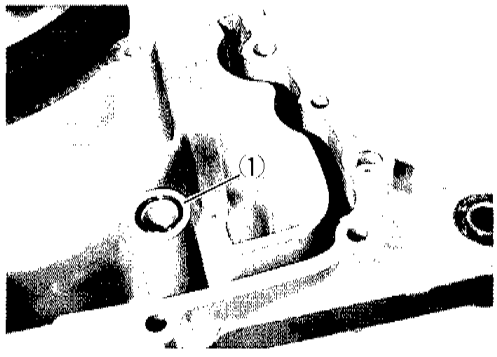

CRANKCASE

- Clean and degrease the crankcase mating surfaces (both surfaces) with a cleaning solvent.
- Fit the dowel pins ① into the left crankcase.

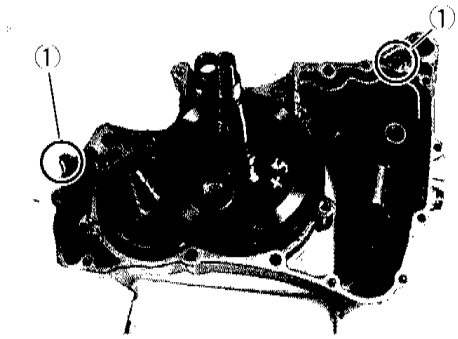

- Apply sealant to the right crankcase.

99000-31110: SUZUKI BOND "1215"

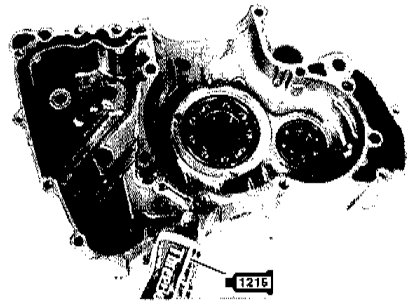

⚠CAUTION

- **Coat the sealant evenly without break.**
- **Application of sealant must be performed within a short period of time.**
- **Take extreme care not to let sealant enter into the oil hole or bearing.**

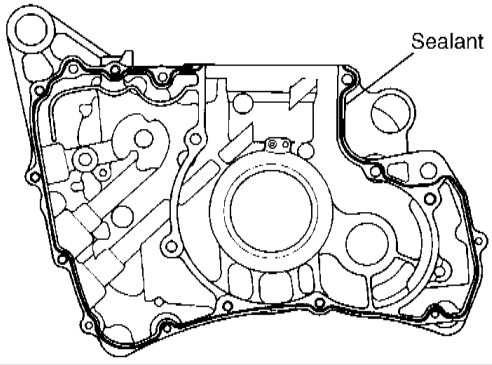

- Assemble the crankcases with in few minutes.
- Fit the gasket washer to the left crankcase bolts Ⓐ.
- Fit the gasket washer to the right crankcase bolt Ⓑ.
- Tighten the crankcase bolts(8mm) diagonally and evenly in two stages; initial tightening and final tightening.

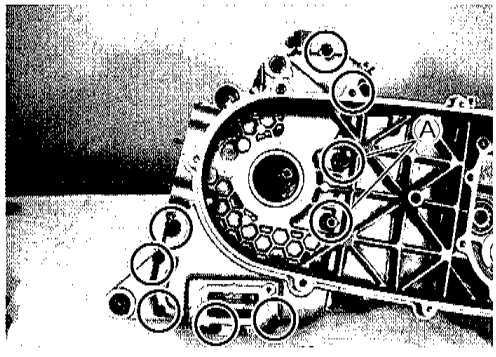

Crankcase bolt

Initial tightening: 8mm 13 N · m (1.3kg-m)
Final tightening: 8mm 22 N · m (2.2kg-m)
6mm 11 N · m (1.1kg-m)

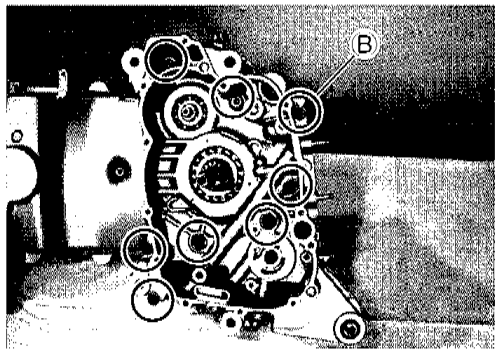

NOTE:

After crankcse bolts have been tightened, check it crankshaft rotate smoothly.

BALANCER GEAR

- Insert the pin ①.
- Install the balancer drive gear ②.

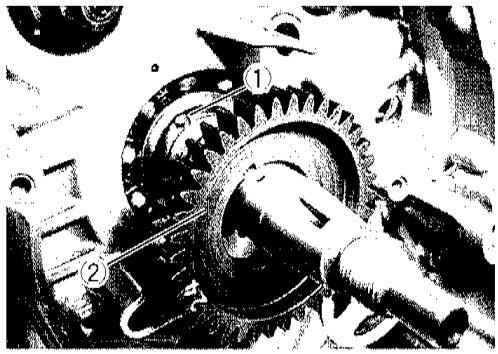

⚠CAUTION

Make sure to align the slot of the balancer drive gear with the pin.

- Lock the crankshaft by inserting a steel rod into the crank web holes through the crankcase hole Ⓐ.
- Using the special tool, tighten the balancer drive gear nut ③ to the specified torque.

TOOL 09922-21410: Long socket (46mm)

Balancer drive gear nut: 150 N · m (15kg-m)

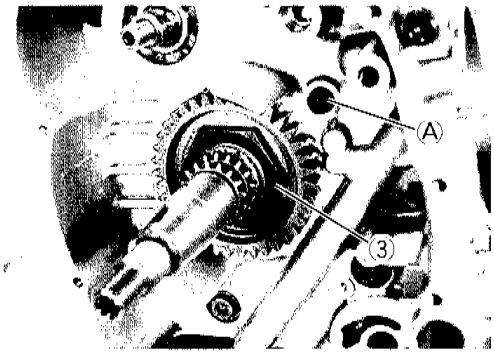

ⓐ Steel rod
ⓑ Crankshaft

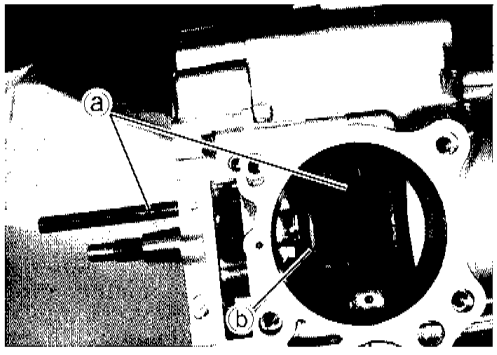

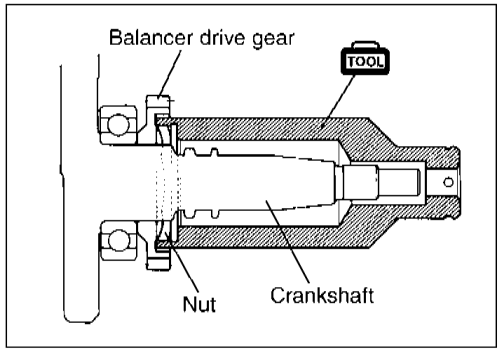

- Fit the balancer shaft key ④ into the key way.

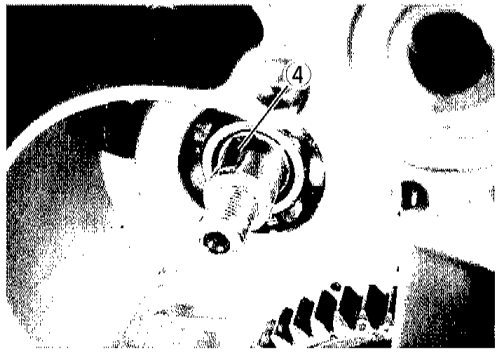

- When installing the balancer driven gear ⑤, align the punch mark Ⓐ on the balancer drive gear with the punch mark Ⓑ on the balancer driven gear.

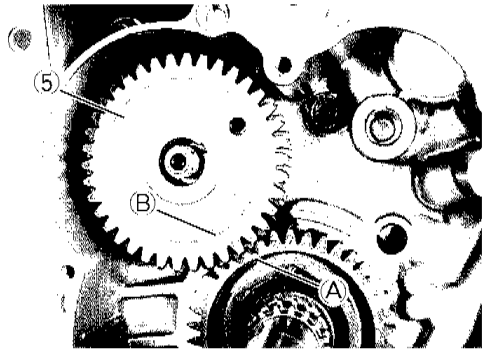

- Position the scissors gear ① with its teeth meshed with the balancer drive gear.
- Insert a steel rod ⓐ into the scissors gear through the balancer driven gear and let the balancer driven gear teeth mesh with the balancer drive gear teeth.

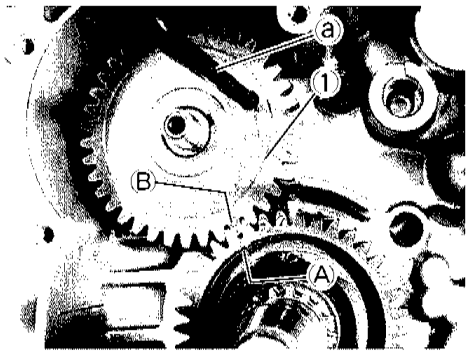

⚠CAUTION

Make sure that the punch mark Ⓐ on the balancer drive gear is aligned with the punch mark Ⓑ on the balancer driven gear.

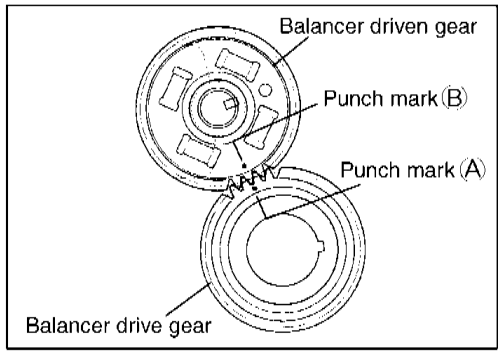

- Install the washer ② and balancer driven gear nut ③.
- Lock the crankshaft by inserting a steel rod and tighten the balancer driven gear nut to the specified torque.

Balancer driven gear nut: 50 N · m (5.0kg-m)

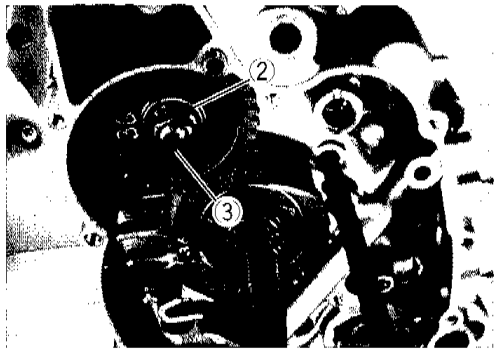

STARTER IDLE GEAR

- Install the starter idle gear ① onto the starter idle gear shaft ②.

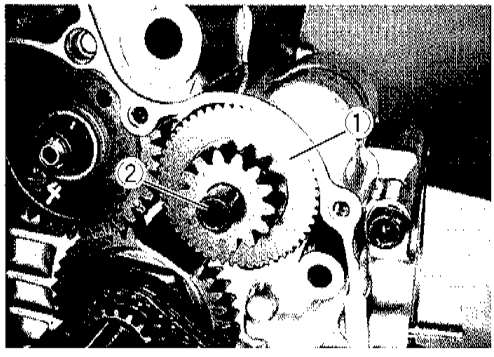

CAM CHAIN

- Fit the cam chain ①.

⚠CAUTION

Pass the cam chain above the boss Ⓐ on the crankcase.

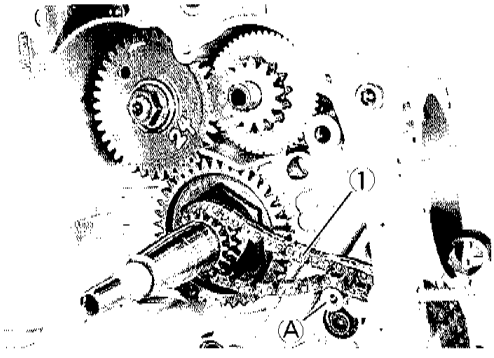

OIL PUMP

- Install the washer ① and pin ② on the oil pump.

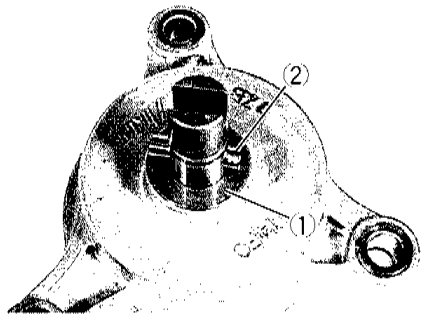

- Install the oil pump gear ③.
- Install the circlip ④.

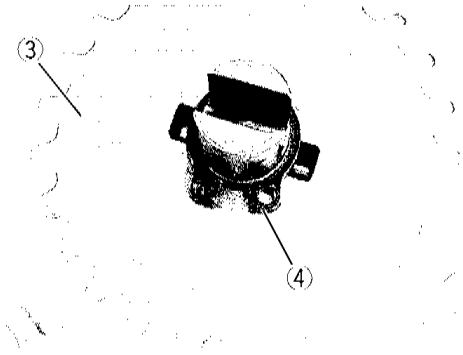

- Engage the chain ⑤ with the oil pump gear.

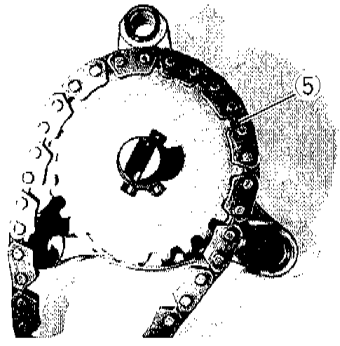

- With the other side of the chain engaged with the crankshaft gear, install the oil pump on the crankcace.
- Tighten the oil pump bolts.

Oil pump bolt: 10 N · m (1.0kg-m)

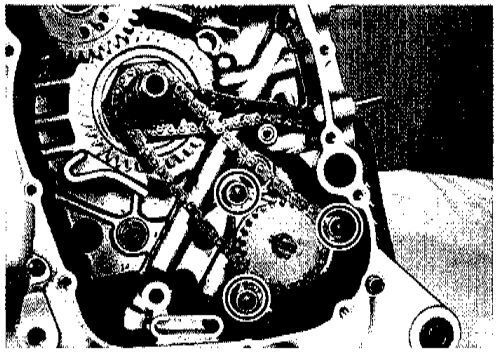

STARTER / GENERATOR

- Position the starter driven gear①and the key②in place.

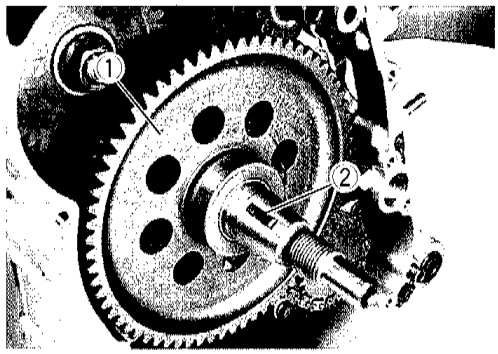

GENERATOR ROTOR

- Install the generator rotor ①.

NOTE:

Make sure to engage the starter clutch with the starter driven gear.

- Screw the generator rotor nut ②.
- With the generator rotor locked, tighten the generator rotor nut ② to the specified torque.

Generator rotor nut: 160 N · m (16.0kg-m)

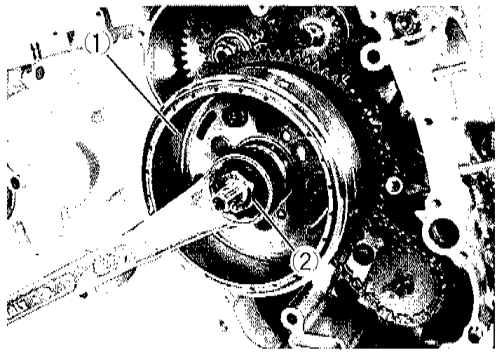

OIL SUMP FILTER

- Fit a new O-ring ①.
- Insert the oil sump filter ②.

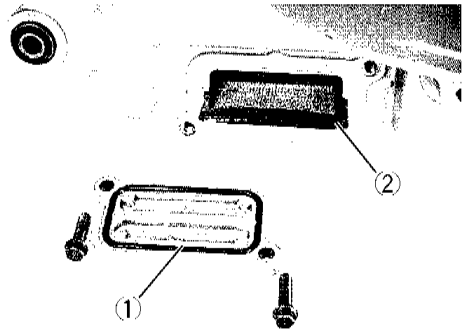

CAUTION

- **The lip Ⓐ of the oil sump filter should be positioned downward.**
- **The thinner side Ⓑ of the oil sump filter should be positioned inside.**

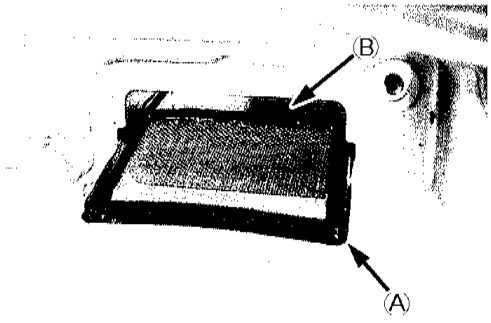

- Install the oil sump filter cap ③.

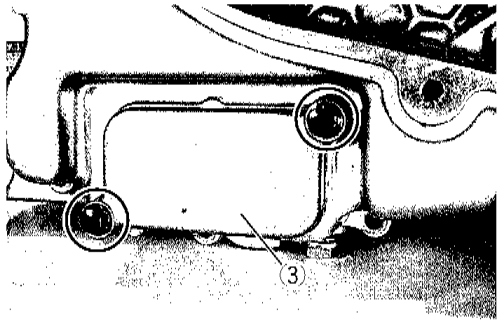

TRANSMISSION / CLUTCH

(1) Fixed drive face
(2) Movable drive face
(3) Movable drive roller
(4) V-belt
(5) Clutch housing
(6) Clutch shoe
(7) Spring
(8) Movable driven face sheet
(9) Movable driven face
(10) Fixed driven face
(11) Drive shaft
(12) Idle shaft
(13) Final driven gear
(14) Rear axle shaft

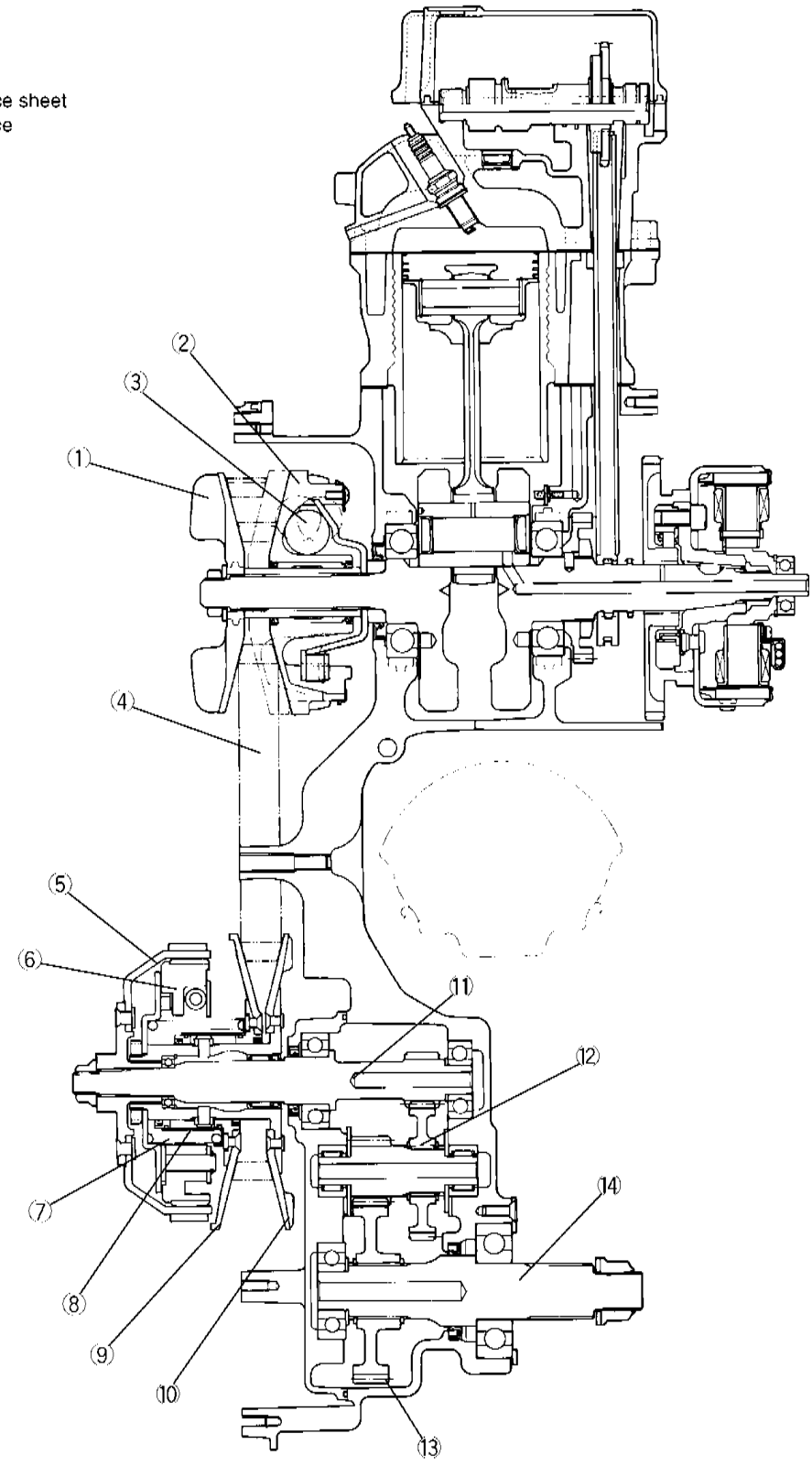

IDLE SHAFT

- Fit the washer ①.

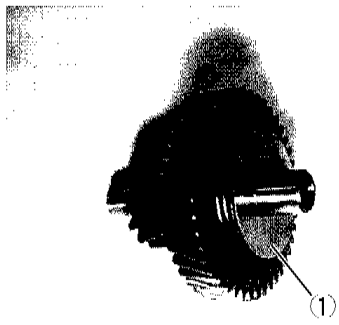

- Install the idle shaft ②.

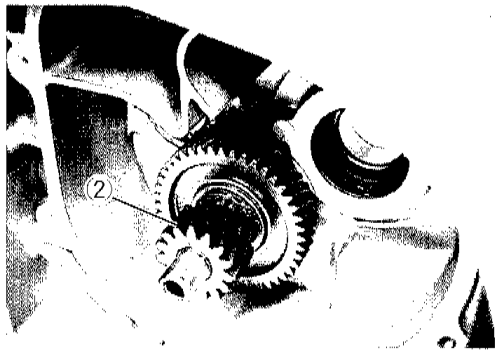

REAR AXLE SHAFT

- Install the final driven gear and rear axle shaft ①.

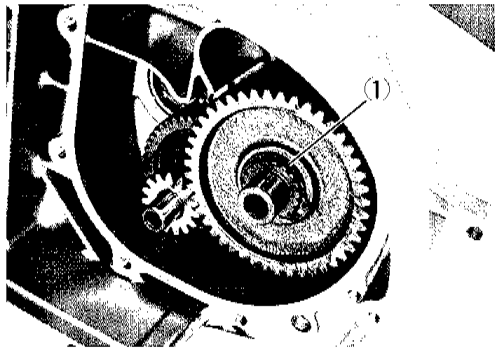

- Fit the washers ② and ③.

⚠CAUTION

Apply engine oil to each gear and shaft.

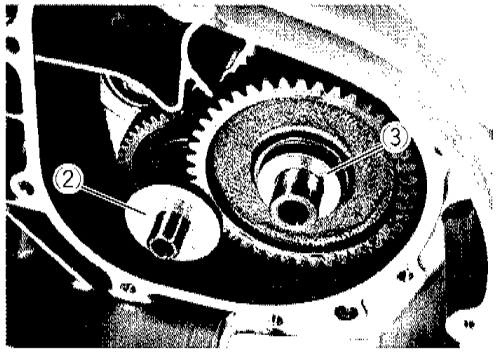

TRANSMISSION / TRANSMISSION COVER

- Install the driveshaft to the transmission cover.
- Fit a new O-ring ①.
- Fit the washer ②.

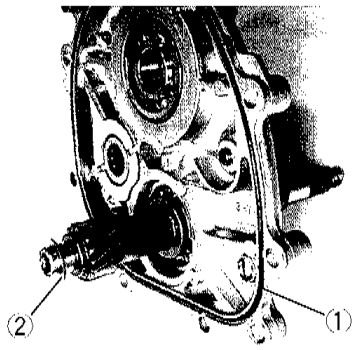

- Install the dowel pins ③.

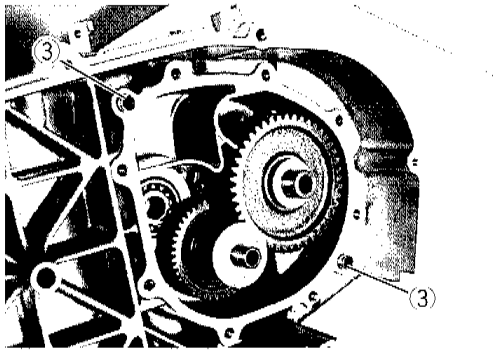

- Install the transmission cover ⑤ together with the drive-shaft ④.

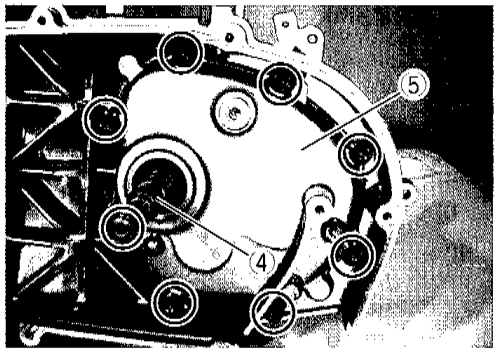

▲CAUTION

- **Be careful not to drop the driveshaft washer ② inside during assembly.**
- **Also take care not to allow the O-ring ① to be pinched.**

Transmission cover bolt: 22 N · m (2.2kg-m)

- Tighten the transmission drain bolt ⑥ and fill specified amount of transmission oil.

Overhaul : 190 ml
Change : 200 ml

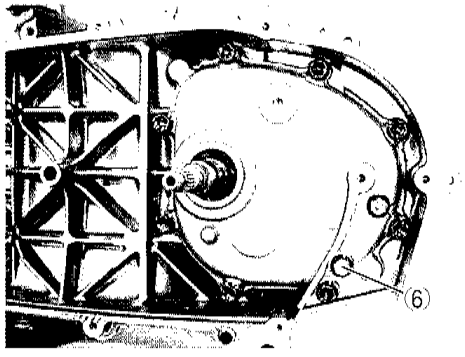

MOVABLE DRIVEN FACE

- With the clutch shoe spring compressed by pulling the movable driven face toward the clutch using the bearing remover, install the drive belt ② to the movable driven face ①.

▲CAUTION

- **Position the drive belt so that the arrow Ⓐ points the engine rotating direction.**
- **Degrease the drive belt contact surface (pulley face).**

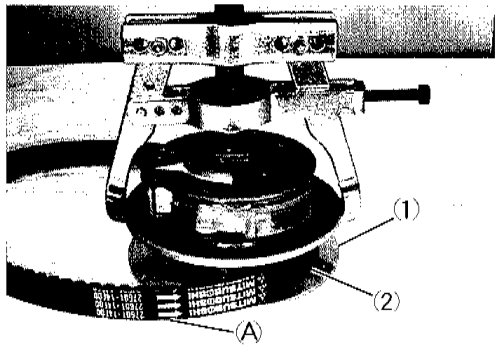

- Mount the movable driven face assembly ①.

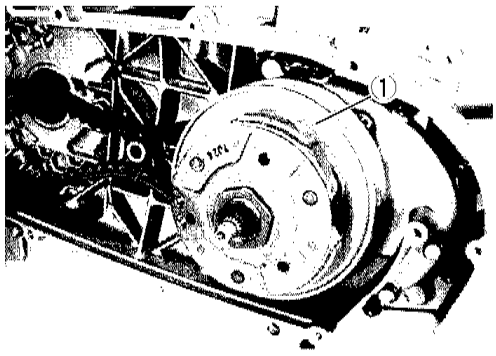

⚠CAUTION

Pull the center area of upper and lower belt lines to be close to each other to prevent the belt from expanding.

- Lock the clutch housing using the special tool and tighten the clutch housing nut ② to the specified torque.

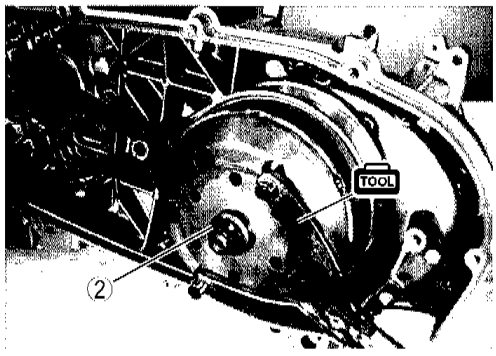

⚠CAUTION

Degrease the inner surface of the clutch housing.

TOOL 09930-40113: Rotor holder

Clutch housing nut: 75 N · m (7.5 kg-m)

MOVABLE DRIVE FACE

- Check that no roller inside the movable drive face is out of position from the slot.
- Install the movable drive face ① in position.

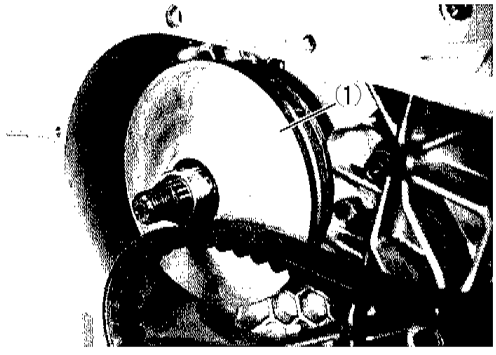

⚠CAUTION

- **The assembly work should be carefully performed so as not to allow the roller to dislocate.**
- **Degrease the drive belt contact surface (pulley face).**

- Install the fixed drive face ②.
- Fit the washer ③ and nut ④.

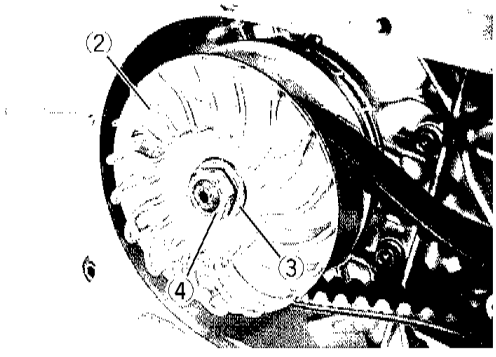

⚠CAUTION

Check that the fixed drive face is not fouled with grease or other substance and if found, clean and degrease completely.
Check that the parts are properly engaged with the spline.

- With the crankshaft locked, tighten the fixed drive face nut ④ to the specified torque.

Fixed drive face nut: 95 N · m (9.5 kg-m)

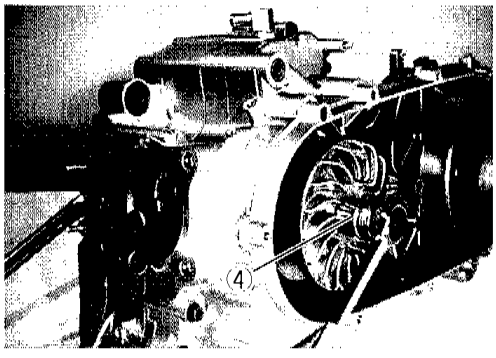

- To obtain proper contact of the drive belt, turn the fixed drive face①until the fixed drive face and the fixed driven face
  ② can rotate synchronously.

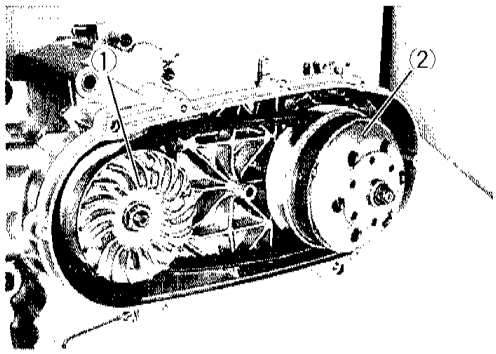

CLUTCH INNER COVER

- Install the dowel pins ①.
- Fit the gasket.

⚠CAUTION

Make sure to replace the gasket with a new one.

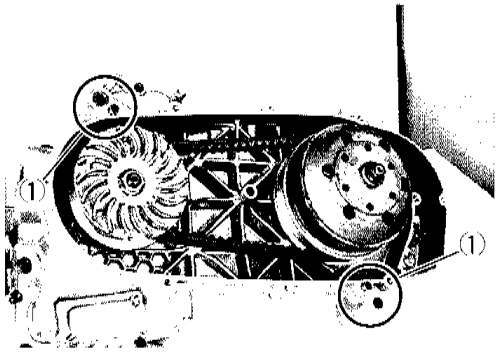

- Install the clutch inner cover ②.

⚠CAUTION

Bolts must be tightened diagonally and evenly.

- Tighten the clutch inner cover bolts to the specified torque.

Clutch inner cover bolt: 11 N · m (1.1 kg-m)

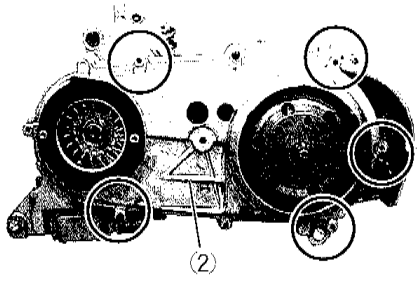

GENERATOR COVER

- Fit the dowel pins ① and gasket ②.

⚠CAUTION

Make sure to replace the gasket with a new one.

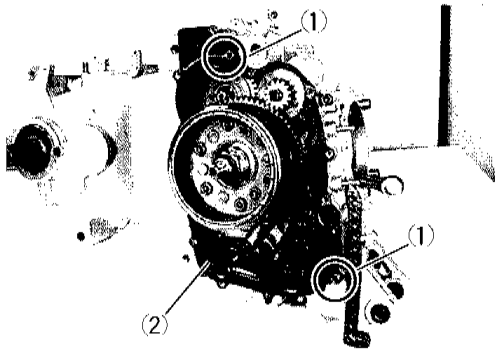

- Install the generator cover ③.
- Tighten the generator cover bolts to the specified torque.

⚠CAUTION

Fit the gasket washer to the bolts, ④ and ⑤.

Generator cover bolt: 11 N · m (1.1 kg-m)

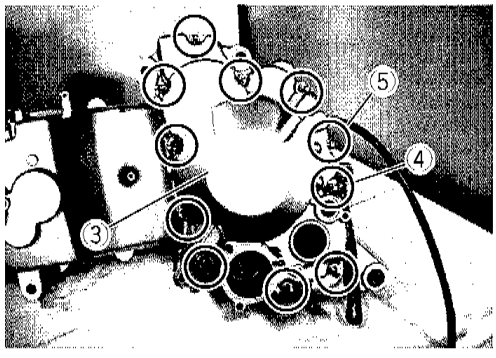

WATER PUMP

- Fit the O-rings ① and ② on the water pump.

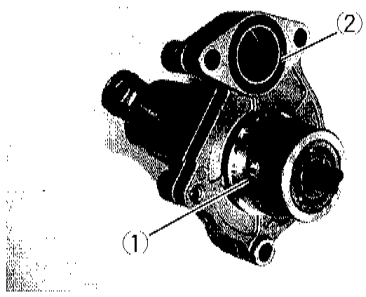

⚠CAUTION

Make sure to replace the O-rings with new ones.

- Apply a small amount of engine oil to the O-rings.
- Install the water pump ③.

⚠CAUTION

Align the flats Ⓐ of the water pump shaft end with the slot Ⓑ of the oil pump shaft.

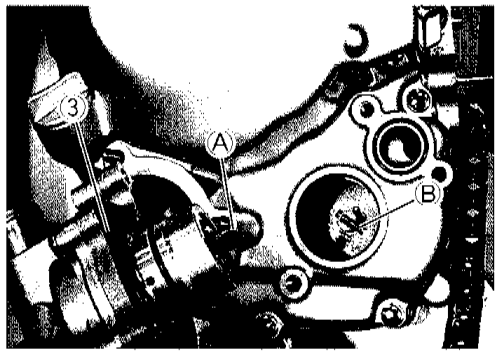

- Tighten the water pump bolts to the specified torque.

Water pump bol: 10 N · m (1.0 kg-m)

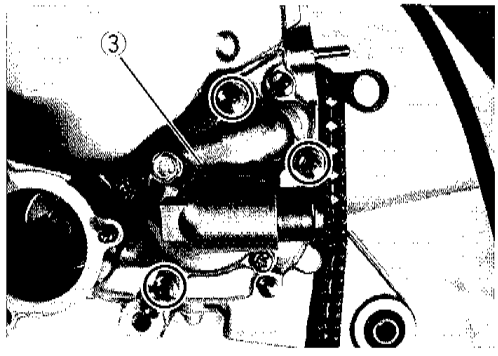

OIL FILTER

- Fit the O-ring ①.
- Position the oil filter ②.
- Fit the O-ring ③.

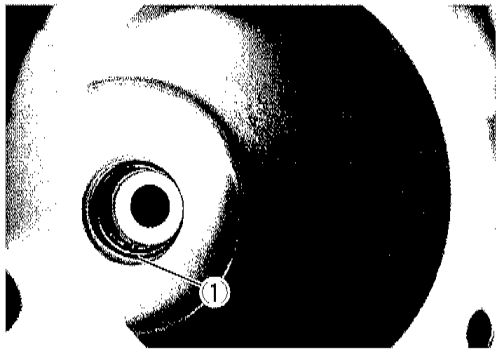

⚠CAUTION

Make sure to replace the O-ring with a new one.

⚠CAUTION

Position the oil filter so that the valve Ⓐ comes outside.

- Install the oil filter cap ④.

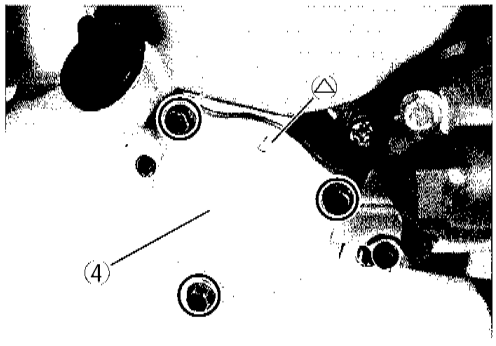

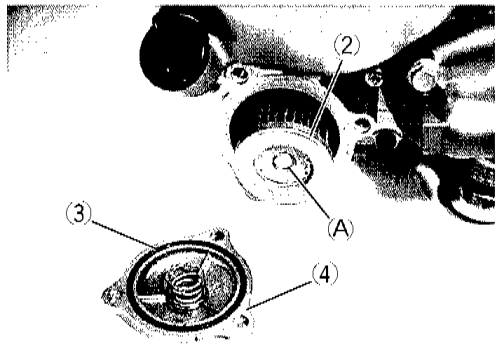

PISTON RING

- Install the piston rings in the order of oil ring, 2nd ring and top ring.
- To install the oil ring, fit the spacer ① first and then the side rails ②.

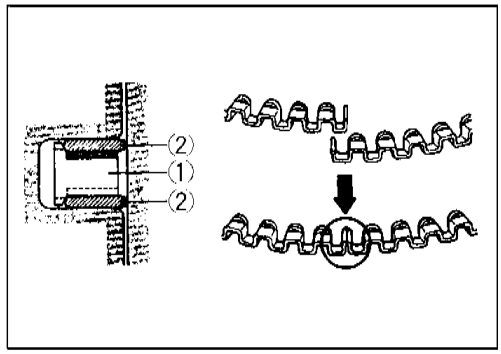

⚠CAUTION

- **When inserting the spacer, take care not to have the ends overlapped.**
- **The top and 2nd rings have a stamped mark on the side. Be sure to bring the stamped mark side to the top when assembling to the piston.**
- **Be careful not to cause scratch on the piston when inserting the piston ring to the piston. Also, do not expand the piston ring more than necessary as the ring can break.**

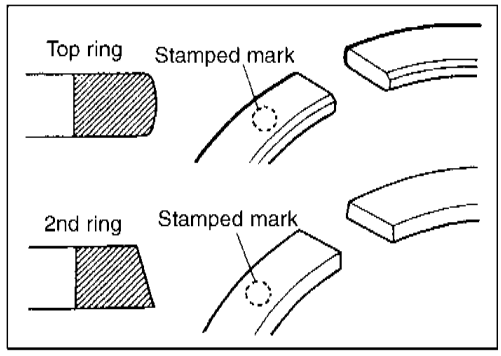

- When all the piston rings have been assembled, check that each can turn smoothly.
- To minimize compression and oil leaks, locate each piston ring end gap in the position as shown in the right illustration.
  - ① 2nd ring / side rail (lower side)
  - ② Side rail (upper side)
  - ③ Top ring / spacer

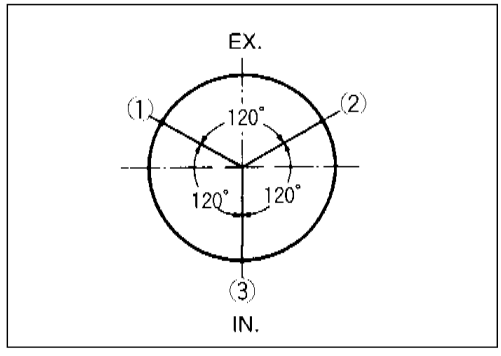

PISTON

- When installing the piston, turn the arrow mark Ⓐ on the piston head to exhaust side.
- Lightly coat the piston pin with SUZUKI MOLY PASTE when inserting.

99000-25140: SUZUKI MOLY PASTE

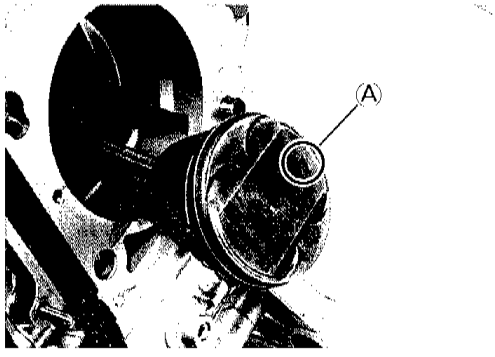

- After the piston pin ① has been inserted through the conrod, install the circlip ②.

⚠CAUTION

- **Replace the circlip with a new one.**
- **Place a piece of rag under the piston when installing the circlip to prevent it from falling into the crankcase.**
- **The circlip end gap must be positioned so as not to coincide with the piston pin bore cutaway.**

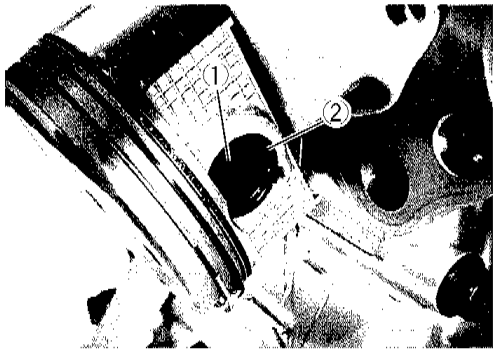

CYLINDER

- Place the dowel pins ① and a new gasket ② on the crankcase.

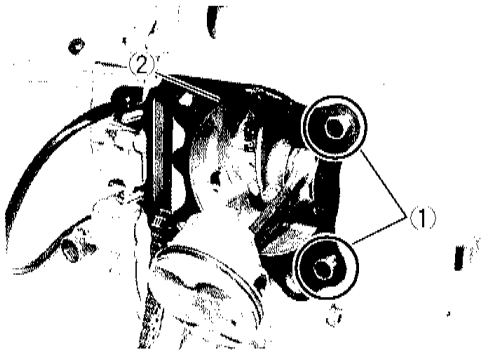

⚠CAUTION

Make sure to replace the gasket with a new one.

- Coat the cylinder wall and piston surface with oil.
- Install the cylinder ③.

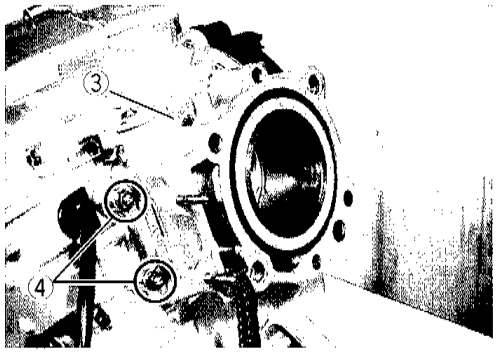

⚠CAUTION

When inserting the piston into the cylinder, use care not to break the piston ring.

- Temporary tighten the cylinder nuts ④.

CAM CHAIN GUIDE

- Install the cam chain guide ①.

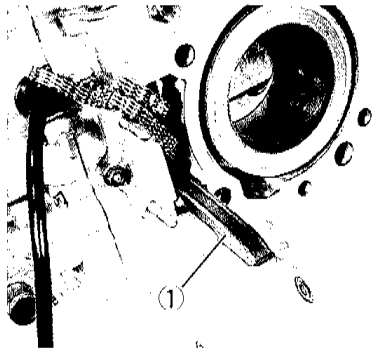

⚠CAUTION

When installing the cam chain guide, check that the chain is properly engaged with the crankshaft sprocket.

CYLINDER HEAD

- Place the dowel pins ① and a new cylinder gasket ② on the crankcase.

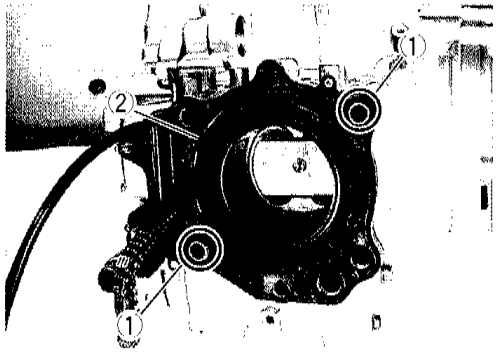

⚠CAUTION

Make sure to replace the gasket with a new one.

- Install the cylinder head.
- Fit the copper washers ③ and bolts ④.

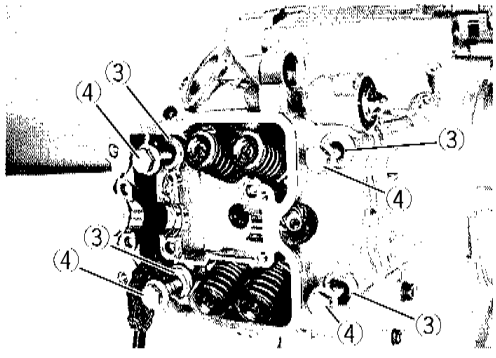

- Tighten the cylinder head bolts and nuts diagonally and evenly.
- The head bolt tightening must be performed in two stages; initial and final tightening.

Cylinder head bolt (M10)
Initial tightening: 20 N · m (2.0 kg-m)
Final tightening: 42 N · m (4.2 kg-m)

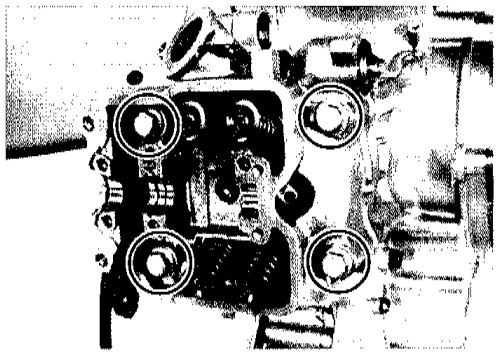

Cylinder head nut (M8): 25 N · m (2.5 kg-m)
Cylinder head nut (M6): 10 N · m (1.0 kg-m)

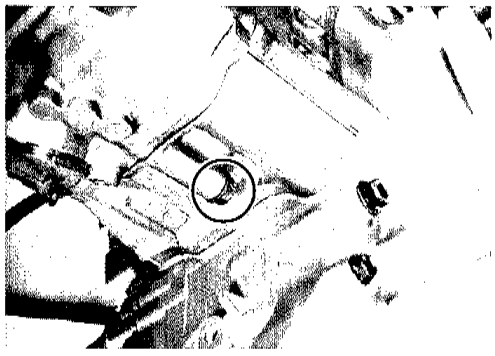

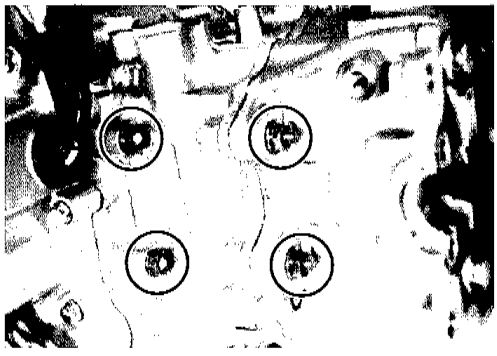

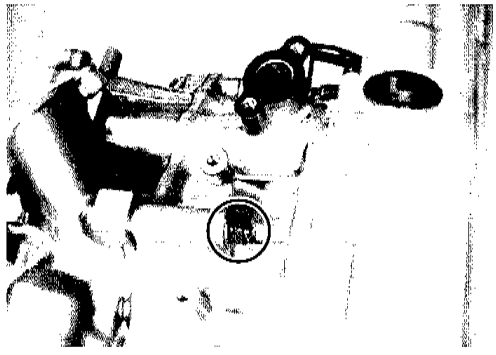

CAMSHAFT

- With the cam chain held by hand, turn the crankshaft in normal direction and align "T" mark on the generator rotor with the arrow mark Ⓐ on the generator cover.

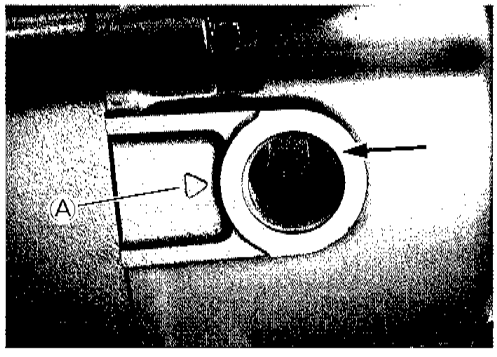

- Position the camshaft①, cam chain②and cam sprocket ③.

⚠CAUTION

Position the cam sprocket so that the stamped mark side faces outside.

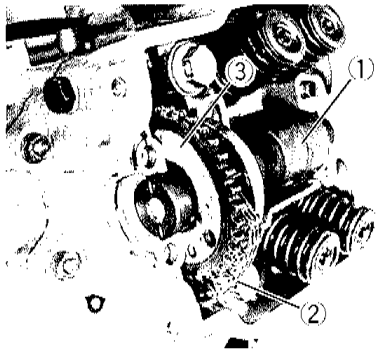

- Align the engraved line Ⓐ with the cylinder head top surface.
- Engage the cam chain with the cam sprocket.

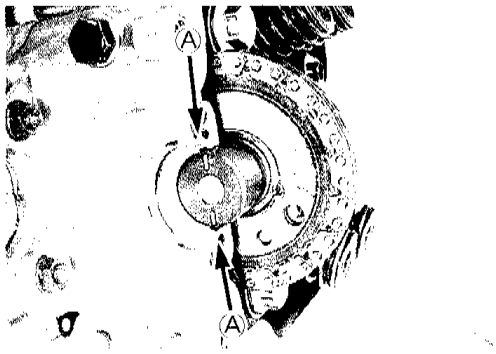

- Align the locating pin hole Ⓑ with the locating pin on the camshaft.

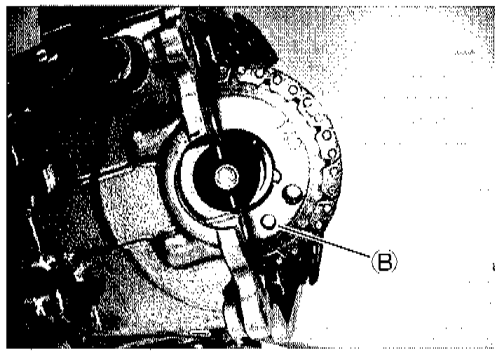

- Apply THREAD LOCK to the cam sprocket bolts.

99000-32030: THREAD LOCK"1303"

- Position the lock washer ① so that the locating pin on the camshaft is covered and tighten the cam sprocket bolts to the specified torque.

Cam sprocket bolt: 15 N · m (1.5 kg-m)

- Bend up the lock washer to lock the bolts.

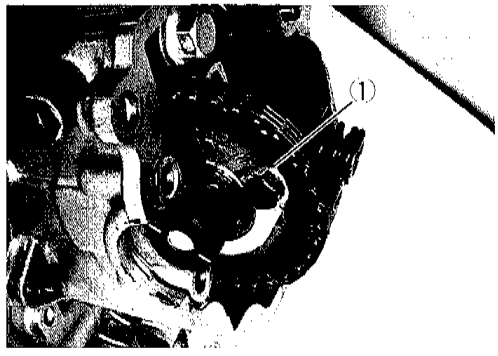

- Fit the C-ring ② and dowel pins ③.
- Coat the cam faces with SUZUKI MOLY PASTE.

99000-25140: SUZUKI MOLY PASTE

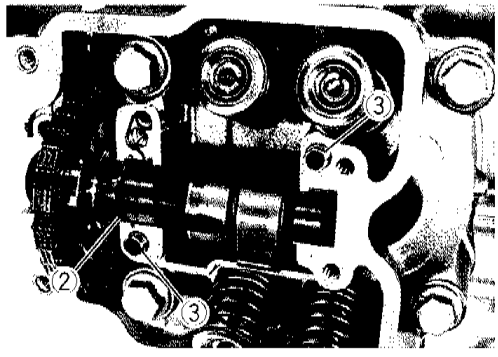

- Position the camshaft journal holders ① and ②, then tighten their bolts to the specified torque.

Camshaft journal holder bolt: 10 N · m (1.0 kg-m)

- To install the camshaft journal holder ②, the protruded side Ⓐ must be positioned outside.

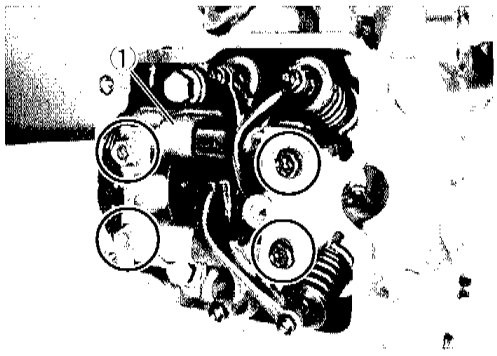

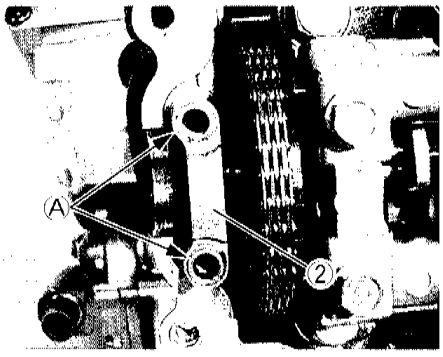

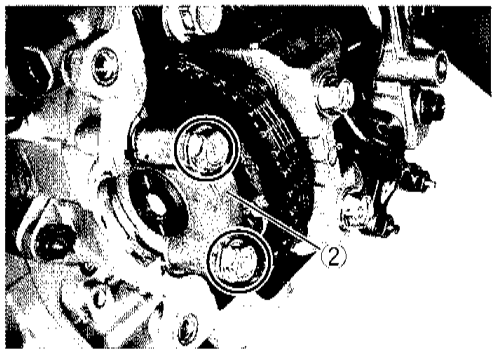

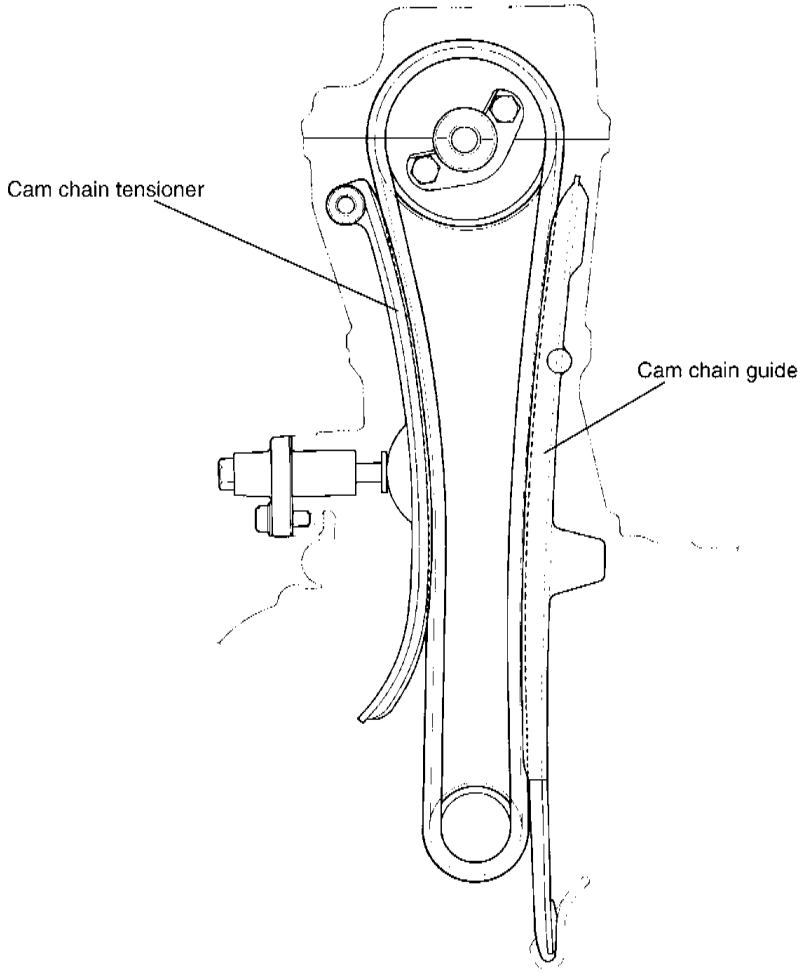

CAM CHAIN TENSIONER ADJUSTER

- With the spring holder bolt and spring removed from the cam chain tensioner adjuster, release locking of the ratchet mechanism ① and push the push rod ② all the way in.

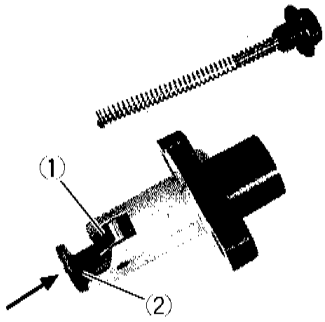

- Position the cam chain tensioner adjuster ③ on the cylinder together with a new gasket and tighten the bolts to the specified torque.

Cam chain tensioner adjuster bolt
: 10 N · m (1.0 kg-m)

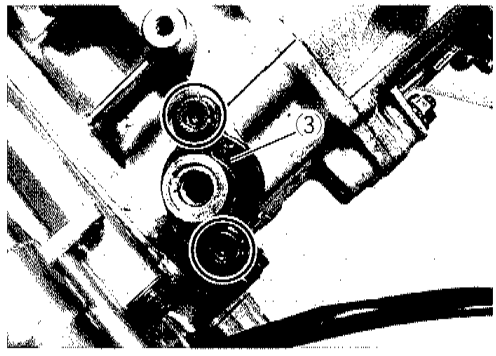

⚠CAUTION

Make sure to replace the gasket with a new one.

- Fit the O-ring ④.
- Insert the spring into the cam chain tensioner adjuster body and tighten the spring holder bolt ⑤ to the specified torque.

Spring holder bolt: 8 N · m (0.8 kg-m)

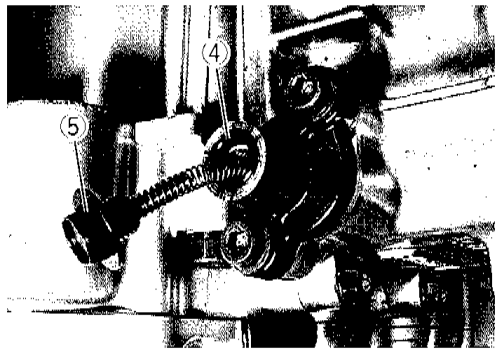

⚠CAUTION

- **When the cam chain tensioner adjuster has been installed, check for cam chain tension to determine if the tensioner adjuster is functioning properly.**
- **Turn the crankshaft and check that all the moving parts (e.g., camshaft and the rocker arm) work properly.**

CYLINDER HEAD COVER

- Fit a new gasket to the cylinder head cover.
- Apply sealant to cam end cap.

1215 99000-31110: SUZUKI BOND"1215"

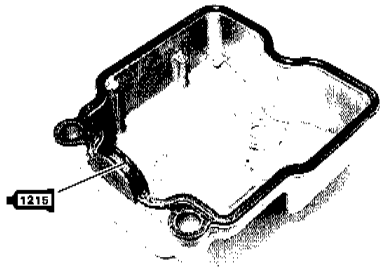

⚠CAUTION

Make sure to replace the gasket with a new one.

- Install the cylinder head cover.
- Install the seal gasket to the cylinder head cover bolt ①.

Cylinder head cover bolt: 14 N · m (1.4 kg-m)

⚠CAUTION

Make sure to replace the gasket with a new one.

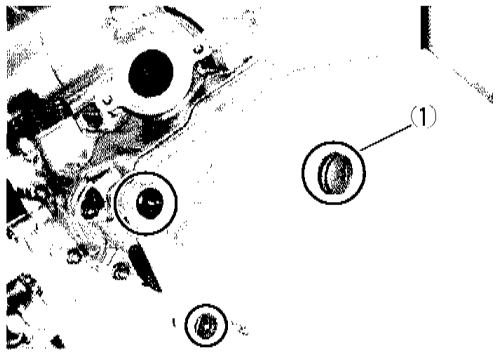

INTAKE PIPE

- Fit a new O-ring ① on the intake pipe.

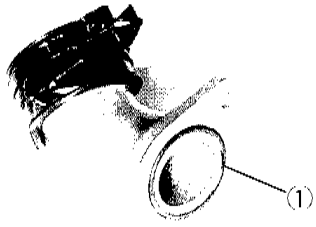

- Position the intake pipe ② on the cylinder head.
- With thread lock applied, tighten the intake pipe bolts.

99000-32110: THREAD LOCK "1322"

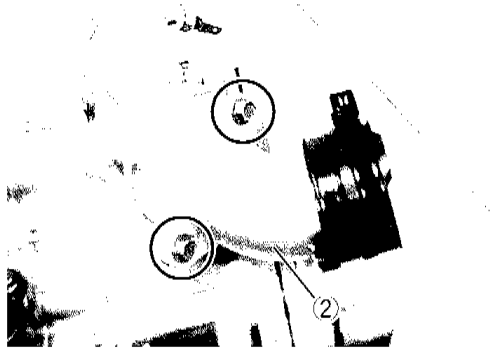

AIR CLEANER BRACKET

- Install the air cleaner brackets and ②.

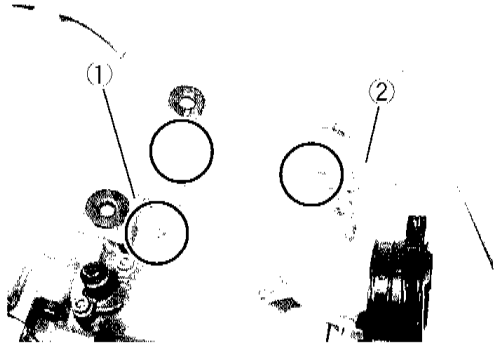

EXHAUST PIPE

- Fit a new exhaust pipe gasket.
- Install the exhaust pipe ①.

⚠CAUTION

Use a new gasket to prevent gas leakage.

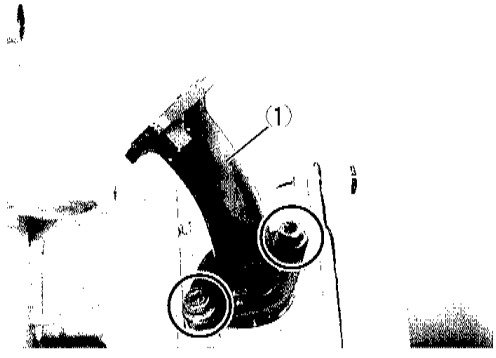

STARTER MOTOR

- Fit the O-ring ① to the starter motor.

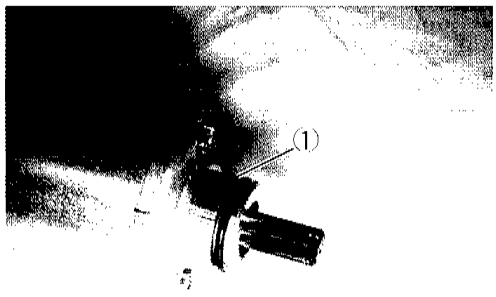

- Mount the starter motor ② on the engine.

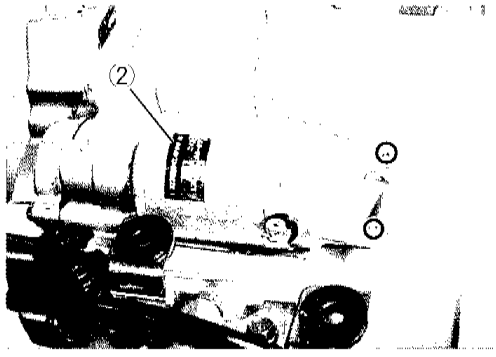

REAR BRAKE DISC

- Install the rear brake disc ① .

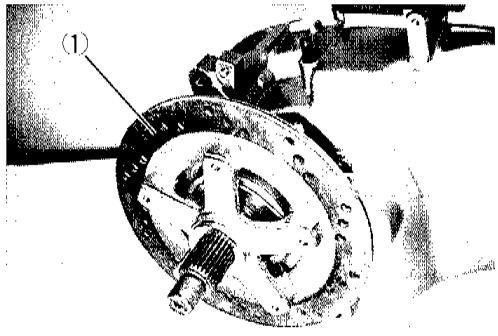

- Install the ignition coil ② on the engine.
- Connect the spark plug cap.

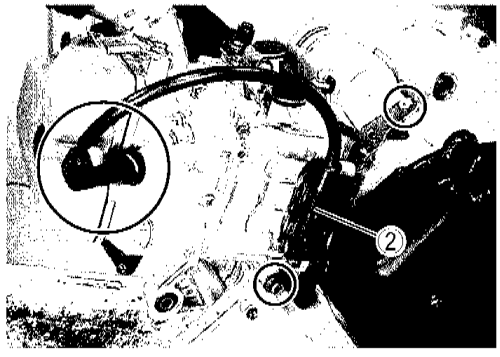

FUEL AND LUBRICATION SYSTEM

CONTENTS

⚠ WARNING

Gasoline must be handled carefully in an area well ventilated and away from fire or sparks.

FUEL SYSTEM

The fuel pump is operated by an electro-magnetic force and its electrical energy is supplied from the battery, The fuel sent under pressure by the fuel pump flows into the float chamber when the float of the carburetor has dropped and the needle valve is open. When the needle valve closes, the pressure of the fuel in the hose connecting the carburetor and the fuel pump increases, and when the set pressure is reached, the operation of the fuel pump is stopped by the fule pressure to prevent excessive supply.

FUEL FLOW CIRCUIT

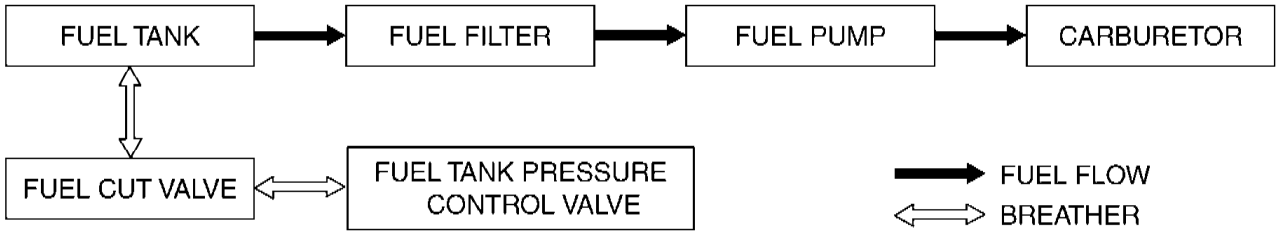

FUEL PUMP

When voltage is applied between the fuel pump terminals, current flows into the solenoid coil which then pulls up the plunger together with the diaphragm allowing fuel to be drawn into the pump. At this time, the contact which is linked with the plunger opens and interrupts current causing the coil to be de-energized. This allows the diaphragm to go down by the spring force, thereby pressurizing and delivering fuel to the outlet. When the fuel pressure builds up and overcomes the spring force, the plunger stops at pulled up position with the contact in open position.

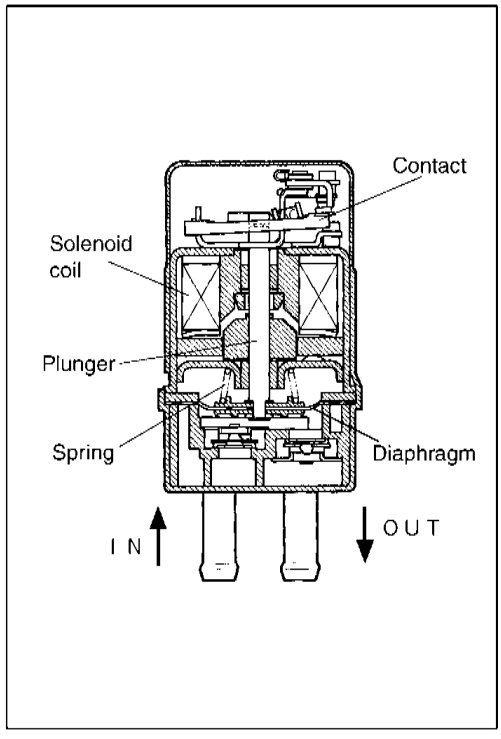

FUEL CUT VALVE AND FUEL TANK RESSURE CONTROL VALVE

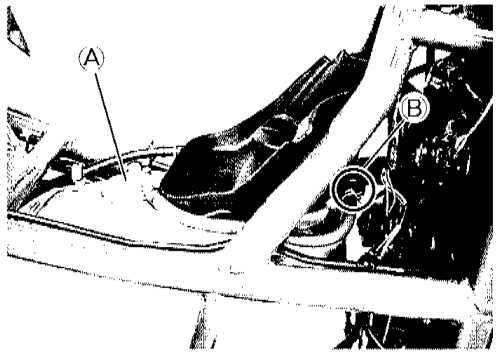

The fuel cut valve Ⓐ and fuel tank pressure control valve Ⓑ are installed on the upper part of the fuel tank.
This system provides necessary air space inside the fuel tank and adjusts the internal pressure.

Fuel tank pressure control valve is designed to provide a resistance of air flow in the direction from fuel tank, white in the opposite direction, air can pass freely. Therefore, fuel evaporation is bled throught TPC gradually.

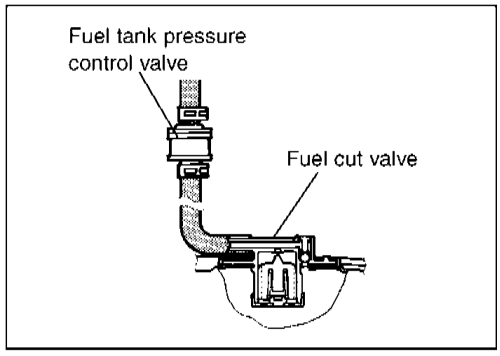

At the time of fuel filling:

Because air can not flow easily in the direction from fuel tank to fuel tank pressure control valve, space above the fuel level inside the tank is secured even though fuel is topped up. Due to this provision, the fuel level in time goes down gradually.

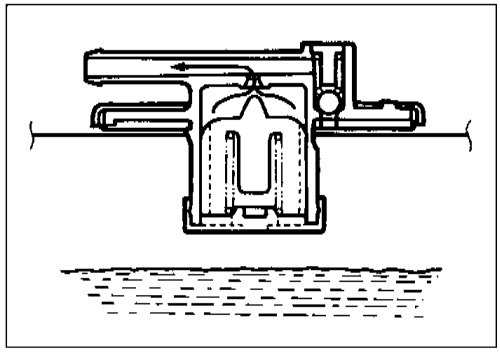

At the time of raised level:

In the event of raised level due to overturning of motor cycle, the valve Ⓐ ascends by flotation and shuts off the air passage to prevent fuel from leaking.
If, under this condition, the tank pressure builds up, the valve Ⓑ opens to relieve the intednal pressure.

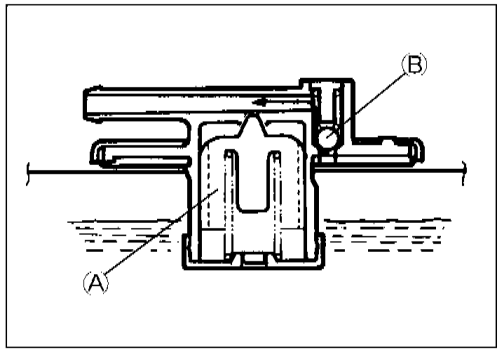

FUEL TANK

REMOVAL

The fuel tank is located in front of the engine (under floor).

- Remove the front box. (See page 6-1.)
- Remove the front wheel and front fender. (See pages 6-19 and 31.)
- Remove the radiator. (See page 5-2.)

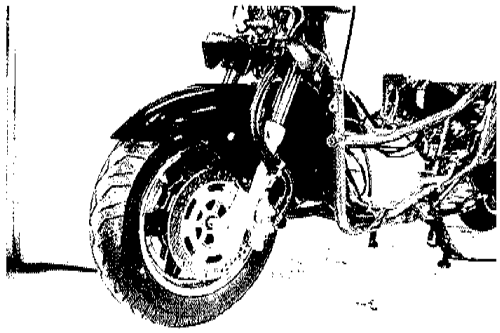

- Disconnect the fuel level gauge coupler ①.
- Disconnect the fuel hose ② from the fuel filter ③.
- Remove the bolt and detach the fuel filter ③.

NOTE:

After disconnecting the fuel hose ②, insert a blind plug into the end to stop fuel leakage.

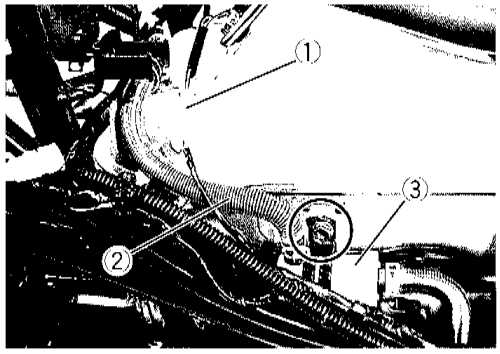

- Remove the fuel tank bolts (3 pcs).
- Remove the fuel tank forward.

⚠WARNING

As gasoline leakage may occur in this operation, keep away from fire and sparks.

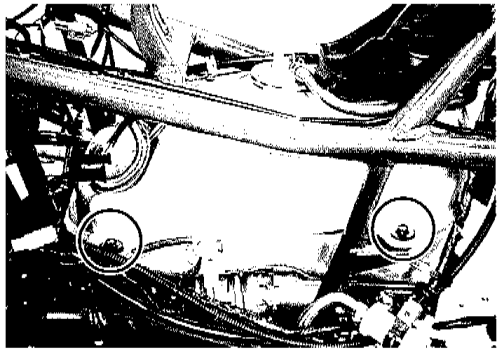

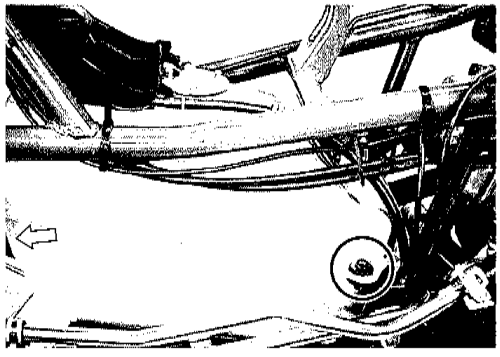

DISASSEMBLY

- Remove the fuel level gauge ①.

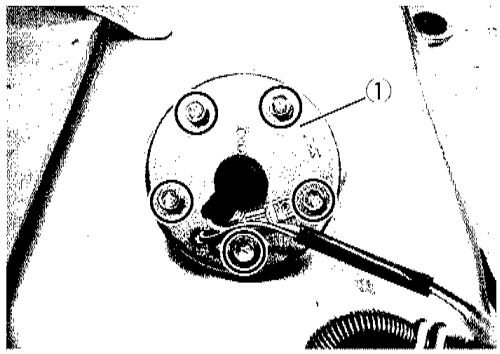

- Remove the fuel tank pressure control valve ② and fuel cut valve ③.

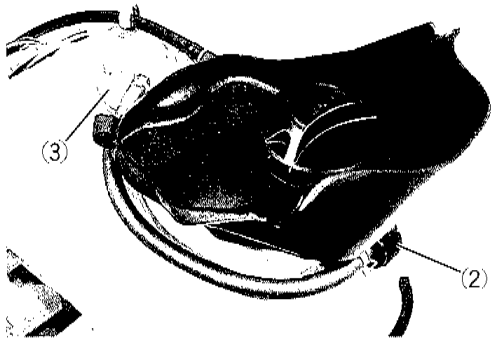

INSPECTION

FUEL FILTER

Visually check the fuel filter. If accumulation of sediment or clogging is found, replace the fuel filter with a new one.

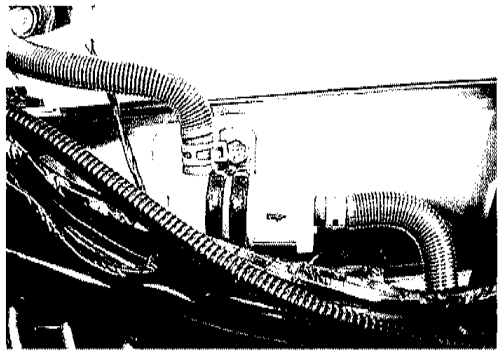

FUEL CUT VALVE

Immerse the fuel cut valve into kerosene as shown in the right illustration and check that the valve ① operates smoothly and contacts the valve seat.

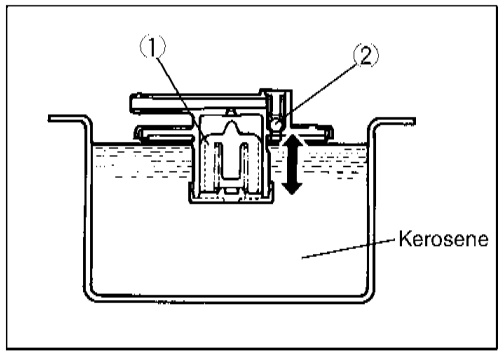

Check that the ball ② moves smoothly when pushed with a thin rod.
Should any defect be found, replace the fuel cut valve with a new one.

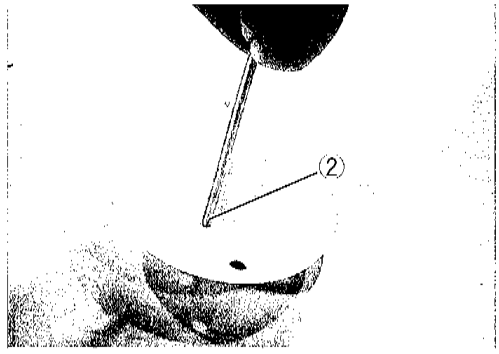

FUEL TANK PRESSURE CONTROL (TPC) VALVE

Check TPC valve if air can pass through smoothly when blown from the orange painted side and not from the other side.
Should any abnormal condition be found, replace the valve with a new one.

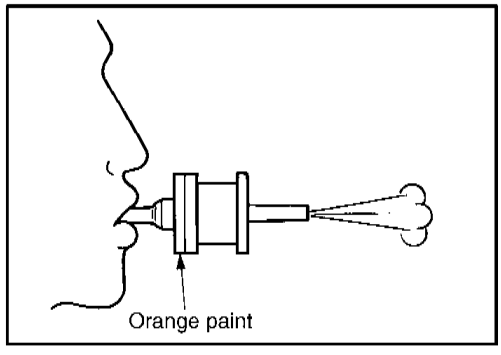

FUEL LEVEL GAUGE INSPECTION

Measure resistance between the terminals when the float is at the position listed below.

TOOL 09900-25008: Multi-circuit tester

Fuel level position	Resistance between terminals
118 mm	1-5 Ω
171 mm	103-117 Ω

If the resistance measured is out of the specification, replace the gauge with a new one.

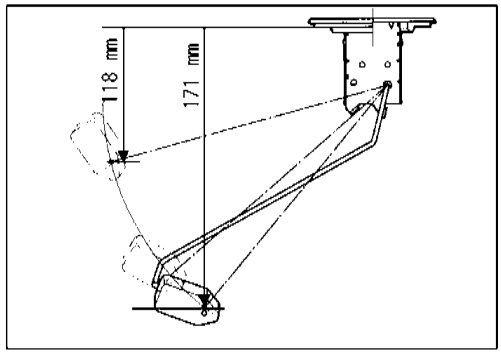

REASSEMBLY

Carry out the assembly procedure in the reverse order of disassembly while observing the following instructions.

- Fit the gasket with its cutout ② engaged with a boss ① on the fuel cut valve.

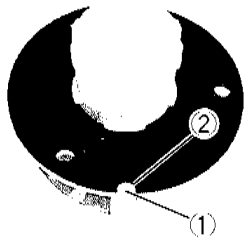

⚠CAUTION

Always use a new gasket when reinstalling.

- Tighten the fuel cut valve bolts evenly.

Fuel cut valve bolt: 3.5 N · m (0.35 kg-m)

NOTE:

Align the boss ③ on the fuel cut valve with the hole of the cover.

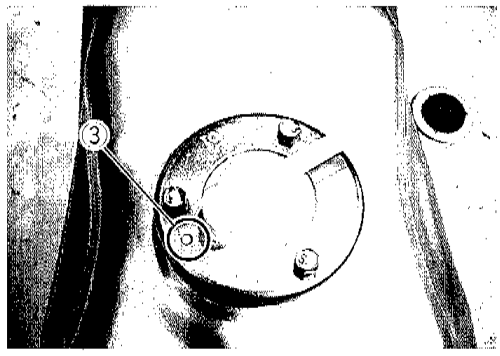

- Fit the fuel level gauge gasket with its flanged side facing down and the hole ④ turned to rear left direction.

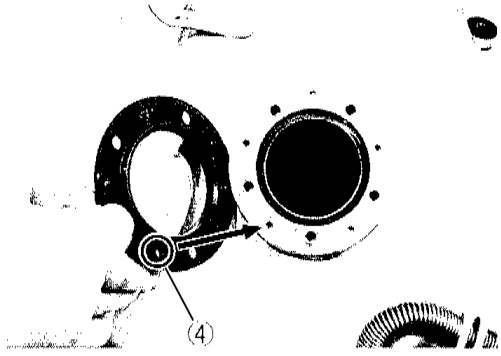

- Tighten the fuel level gauge bolts diagonally and evenly.

Fuel level gauge bolt: 3.5 N · m (0.35kg-m)

NOTE:

Align the mark ⑤ on the fuel level gauge with the gasket hole ④ when reinstalling.

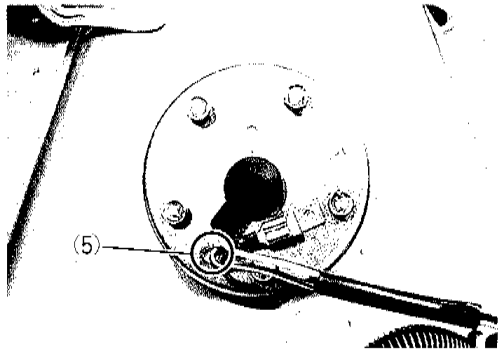

- Install the fuel filter so that the arrow⑥ points the direction of fuel flow.

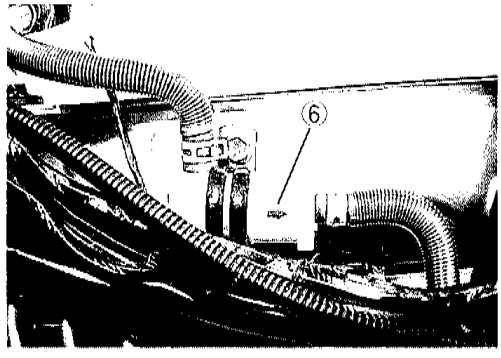

- Tighten the fuel tank bolts.

Fuel tank bolt: 10 N · m (1.0 kg-m)

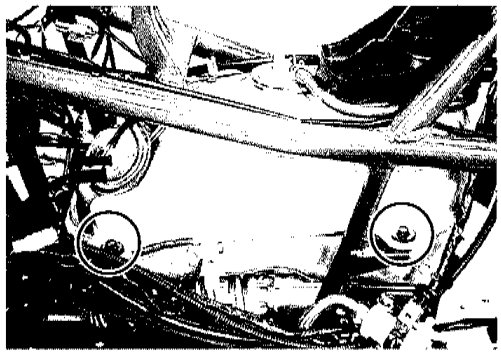

- Install the fuel tank pressure control valve.

NOTE:

Orange painted side of the fuel tank pressure control valve faces the fuel cut valve side.

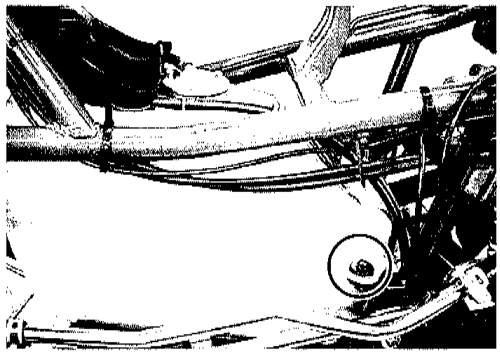

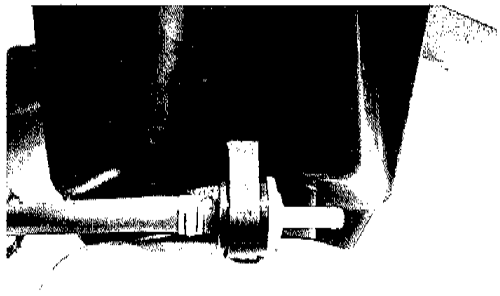

FUEL PUMP

REMOVAL

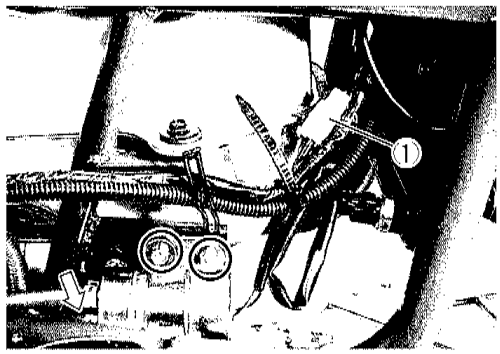

- Remove the rear leg shield. (See page 6-1.)
- Disconnect the fuel hose.
- Disconnect the fuel pump lead wire coupler ①.
- Remove the bolts and remove the fuel pump.

INSPECTION

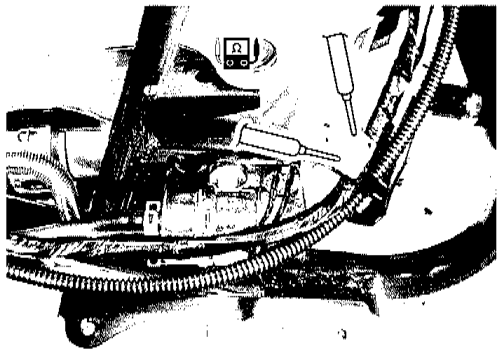

Measure resistance between the terminals of fuel pump lead wire coupler.
If the measurement is out of specification, replace the fuel pump.

Fuel pump resistance: 1-2.5 Ω

TOOL 09900-25008: Multi-circuit tester

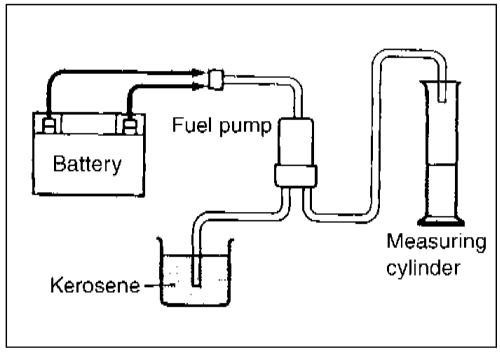

As shown in the right illustration, connect the battery to the fuel pump and measure the pump discharge amount per minute using kerosene.

Battery ⊕ to Orange/white
Battery ⊖ to Black/white
Discharge amount per minute: More than 600 ml

If the measurement is less than the standard value, replace the fuel pump with a new one.

⚠ WARNING

Do not use gasoline in this test as its is highly combustible.

REASSEMBLY

- Carry out the assembly procedure in the reverse order of disassembly.

CARBURETOR

SPECIFICATIONS

ITEM		SPECIFICATION		
		E-02, 04, 34	E-22	E-18
Carburetor type		KEIHIN CVK30	←	←
Bore size		30 mm	←	←
I.D. No.		14F0	14F2	14F3
Idle r/min.		1500±100 r/min.	←	1500±50 r/min.
Float height		23.0±1.0 mm	←	←
Main jet	(M.J.)	#105	#108	←
Main air jet	(M.A.J.)	Press-fitted	←	←
Jet needle	(J.N.)	N7AD	←	←
Needle jet	(N.J.)	ϕ 2.1	←	←
Throttle valve	(Th.V.)	θ =10°	←	←
Pilot jet	(P.J.)	# 38	←	# 40
Pilot screw	(P.S.)	PRE-SET (2-3/4 turs out)	←	←
Throttle cable play		2-4mm	←	←

LOCATION OF CARBURETOR I.D.NO.

The carburetor I.D. is stamped on the location ① on the carburetor as shown in the right photo.

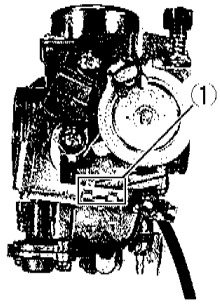

DIAPHRAGM AND PISTON OPERATION

The carburetor is a variable-venturi type, whose venturi cross sectional area is increased or decreased automatically by the piston valve ①. The piston valve moves according to the negative pressure present on the downstream side of the venturi Ⓐ. Negative pressure is admitted into the diaphragm chamber ② through an orifice ③ provided in the piston valve ①.

Rising negative pressure overcomes the spring ④ force, causing the piston valve ① to rise into the diaphragm chamber and prevent the air velocity from increasing. Thus, air velocity in the venturi passage is kept relatively constant for improved fuel atomization and the precise air/fuel mixture.

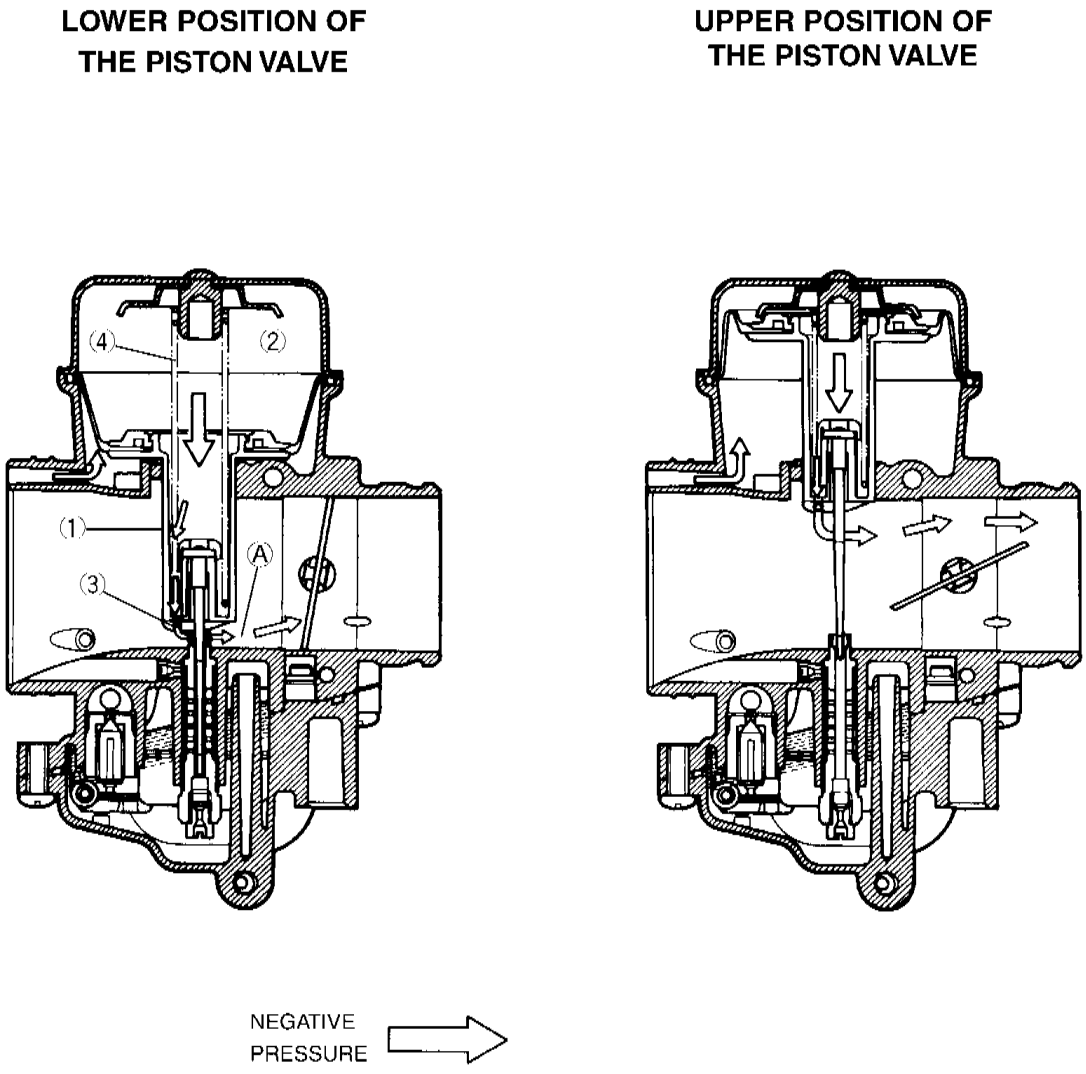

SLOW SYSTEM

This system supplies fuel during engine operation when the throttle valve ① is closed or slightly opened. The fuel from the float chamber ② is metered by the pilot jet ③ where it mixes with air coming in through the pilot air jet ④. This mixture, rich with fuel, then goes up through the pilot passage to the pilot screw ⑤. Part of the mixture is discharged into the main bore through bypass ports ⑥. The mixture is metered by the pilot screw ⑤ and sprayed into the main bore through the pilot outlet port ⑦.

COASTING ENRICHMENT SYSTEM

This coasting enrichment system is included in the slow system. At the normal running operation, joining of the air from upper part of the carburetor inlet side to pilot air passage ⑧ which obtains proper fuel/air mixture ratio. But if the throttle valve is closed suddenly, a large negative pressure generated in the cylinder which is applied to the diaphragm ⑨. The valve ⑩ which interlocks with the diaphragm ⑨ closes an air passage ⑧, thus, the fuel/air mixture becomes rich with fuel. This system is to keep the combustion condition constant by varying the fuel/air mixture ratio by controlling air flow in the pilot circuit.

(NORMAL CONDITION)

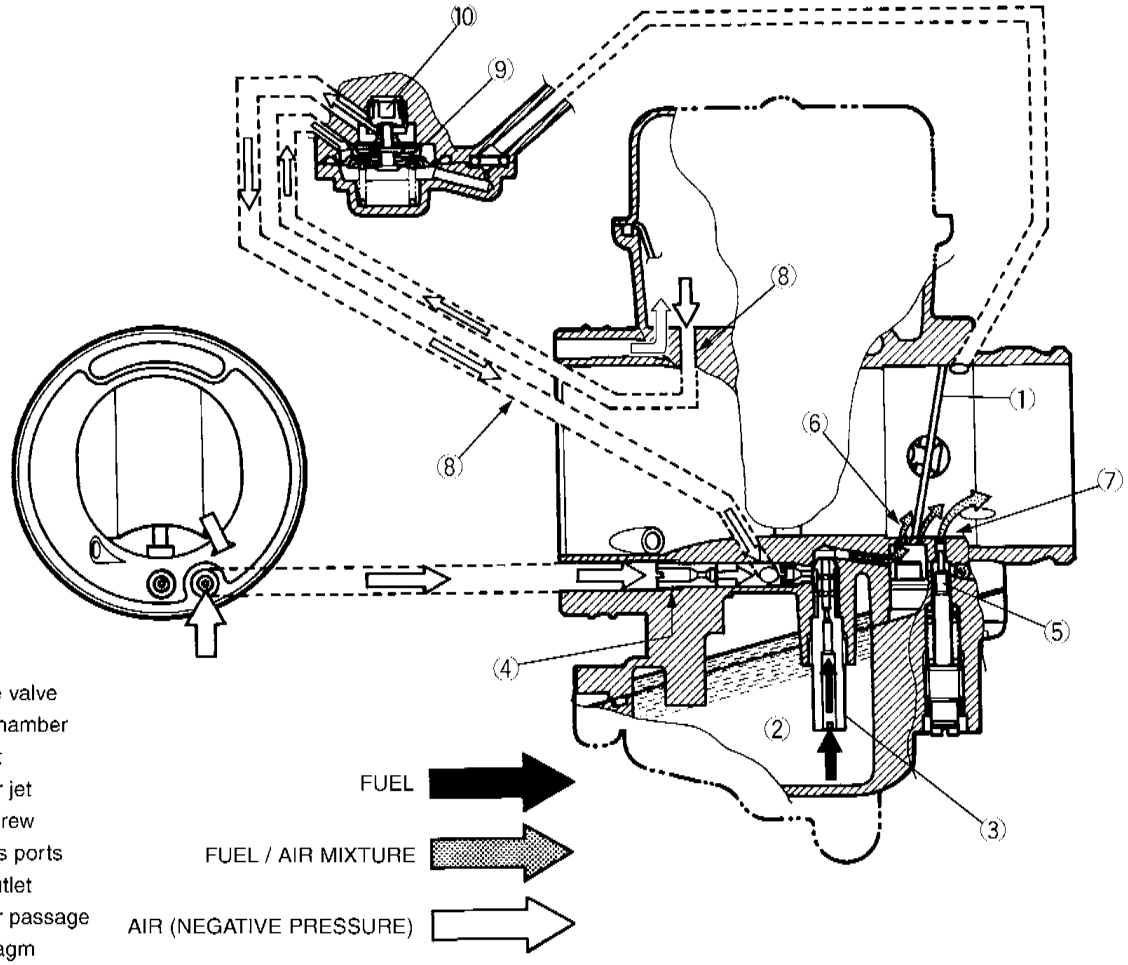

① Throtlle valve
② Float chamber
③ Pilot jet
④ Pilot air jet
⑤ Pilot screw
⑥ By pass ports
⑦ Pilot outlet
⑧ Pilot air passage
⑨ Diaphragm
⑩ Valve

(LARGE NEGATIVE PRESSURE GENERATED CONDITION)

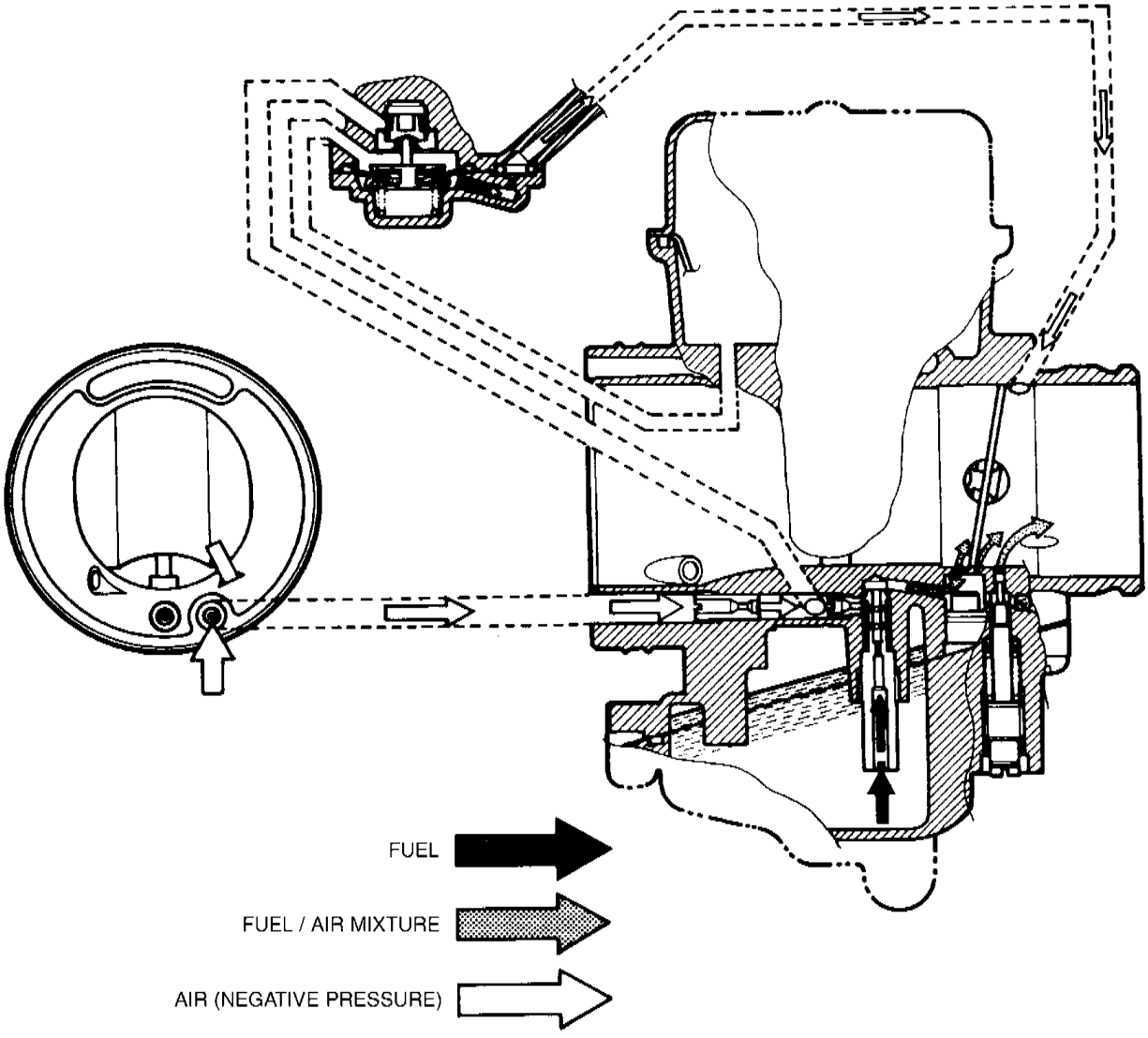

MAIN SYSTEM

As the throttle valve ① is opened, engine speed rises and negative pressure in the venturi Ⓐ increases. This causes the piston valve ② to move upward.

The fuel in the float chamber ③ is metered by the main jet ④. The metered fuel enters the needle jet ⑤, mixes with the air admitted through the main air jet ⑥ and forms an emulsion.

The emulsified fuel then passes through the clearance between the needle jet ⑤ and jet needle ⑦ and is discharged into the venturi Ⓐ, where it meets the main air stream being drawn by the engine. Mixture proportioning is accomplished in the needle jet ⑤. The clearance through which the emulsified fuel must flow ultimately depends on throttle position.

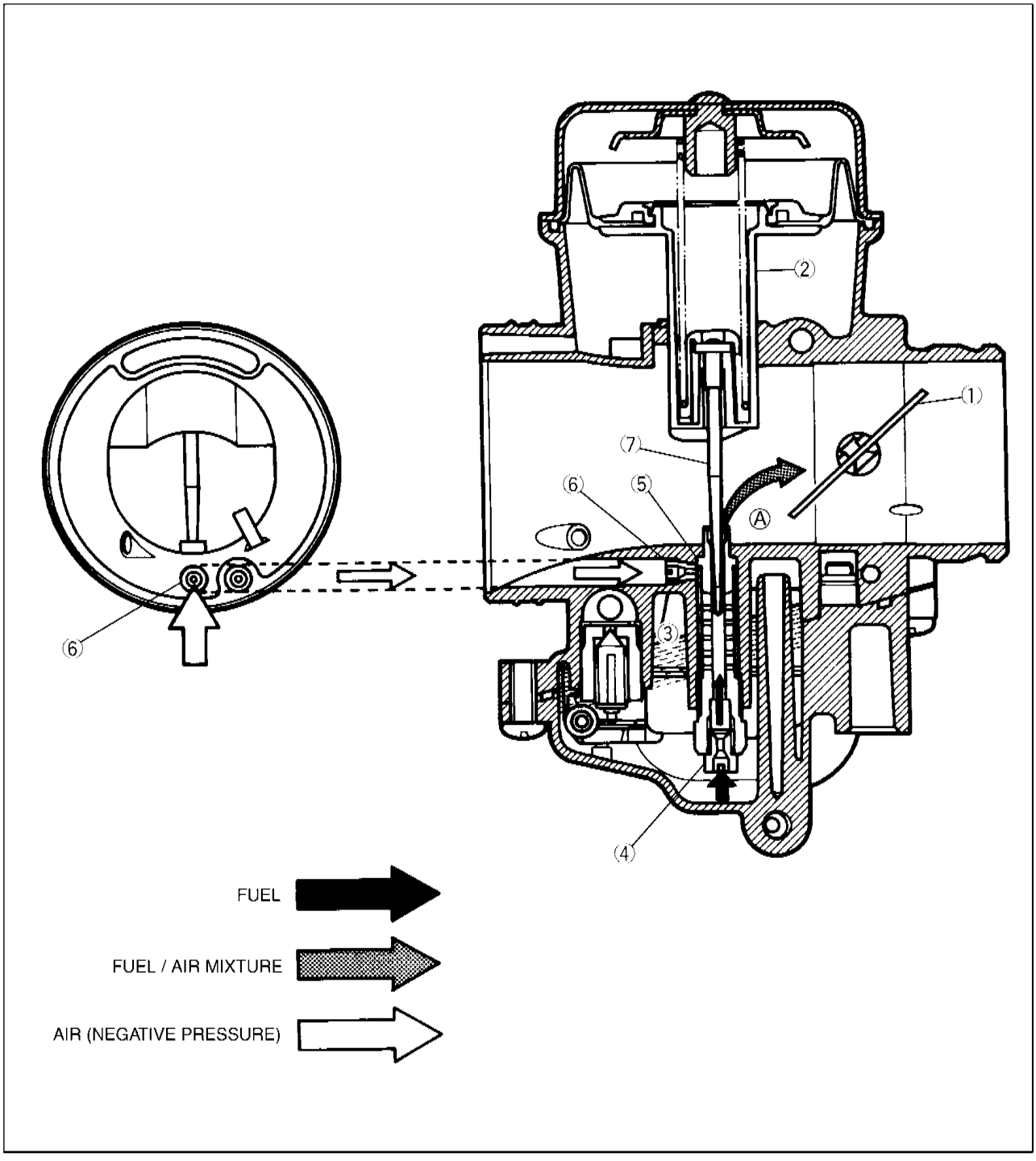

AUTO-ENRICHENER (AUTO-CHOKE) SYSTEM

The automatic enrichener (automatic choke) device consists of the PTC heater Ⓐ, the thermo-wax Ⓑ and the plunger/needle ①. When the thermo-wax Ⓑ is cold, the plunger/needle ① moves upward, fuel is drawn into the enrichener circuit from the float chamber ②.
Enrichener jet ③ meters this fuel, which then flows into fuel pipe ④ and mixes with the air coming from the upper part of the float chamber ⑤. The mixture, rich in fuel content, reaches upper part of the fuel pipe and mixes again with the air coming through a passage extending from main bore ⑥. The two successive mixings of fuel with air are such that proper fuel/air mixture for starting is produced when the mixture is sprayed out through outlet port ⑦ into the main bore.

NOTE:
An enrichener is operated almost the same way as a choke.

When the engine is cold:
The automatic enrichener passage is always open as the thermo-wax remains atomospheric temperautre.

When the engine is started:
According to the PTC heater temperature, the thermo-wax gradually expands and closes enrichener passage by the needle of the plunger.

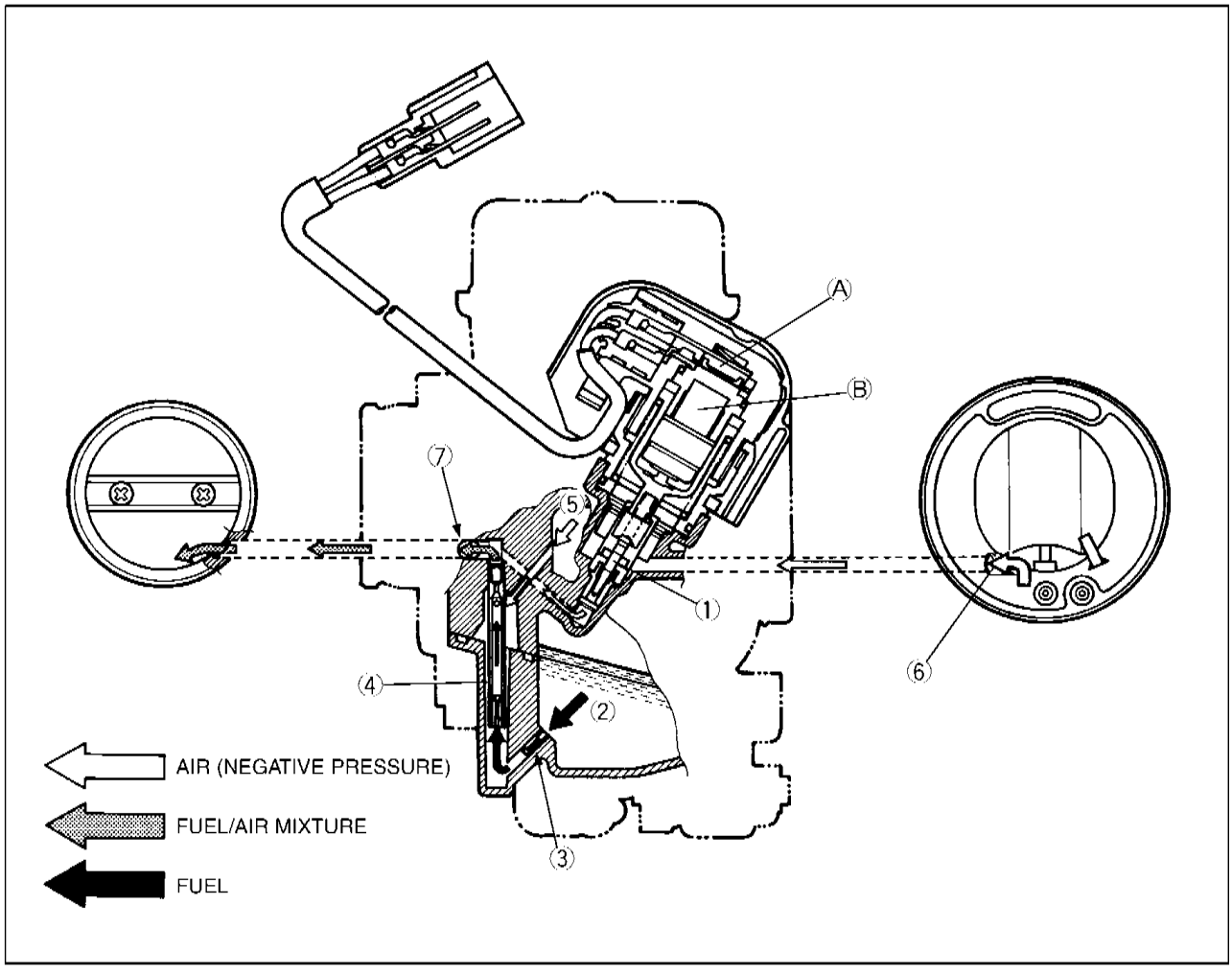

CARBURETOR HEATING SYSTEM

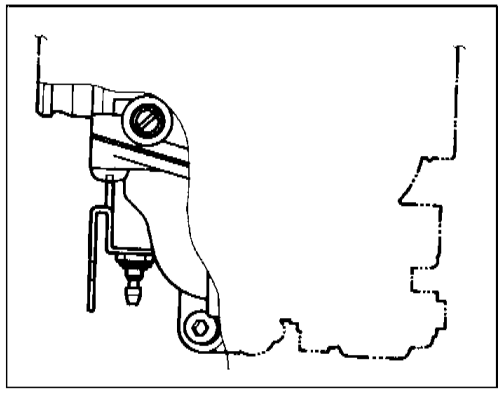

Electric carburetor heater is equipped on the float chamber body. This device consists of the carburetor heater, the thermo-switch and the battery. The carburetor heater provides better fuel atomization when the atomospheric temperature is lower than the specified operating temperature.
Thermo-switch operating temperature: Below 3-9℃ (Except for E-18 and 22)

FLOAT SYSTEM

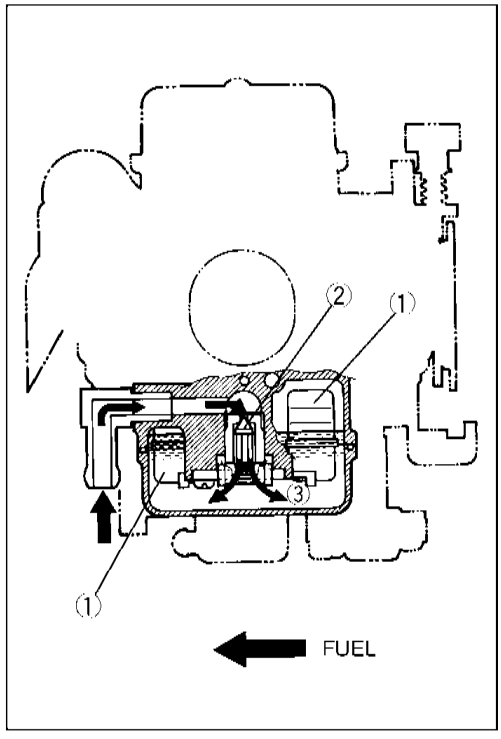

The float ① and needle valve ② work in conjunction with one another. As the float ① moves up and down, so does the needle valve ②.
When there is a high fuel level in the float chamber ③, the float ① rises and the needle velve ② pushes up against the valve seat. When this occurs, no fuel enters the float chamber ③.
As the fuel level falls, the float ① lowers and the needle velve ② unseats itself; admitting fuel into the float chamber ③.
In this manner, the needle valve ② admits and shuts off fuel to maintain the appropriate fuel level inside the float chamber ③.

ACCELERATOR PUMP SYSTEM

This system works only when the rider opens throttle grip quickly as pump send the necessary amount of fuel to the carburetor bore for correcting fuel/air mixture ratio. When the rider open the throttle grip quickly, the intaken air volume becomes large and air velocity at the bottom of the throttle valve (piston valve) is slow and sucking volume of fuel is less.

The throttle valve lever ① pulls lever ② with the cable, and lever ③ turns and pushes rod ④. The rod ④ pushes plunger ⑤. This plunger pushes out the fuel through outlet pipe ⑥, spraying fuel into the main bore.

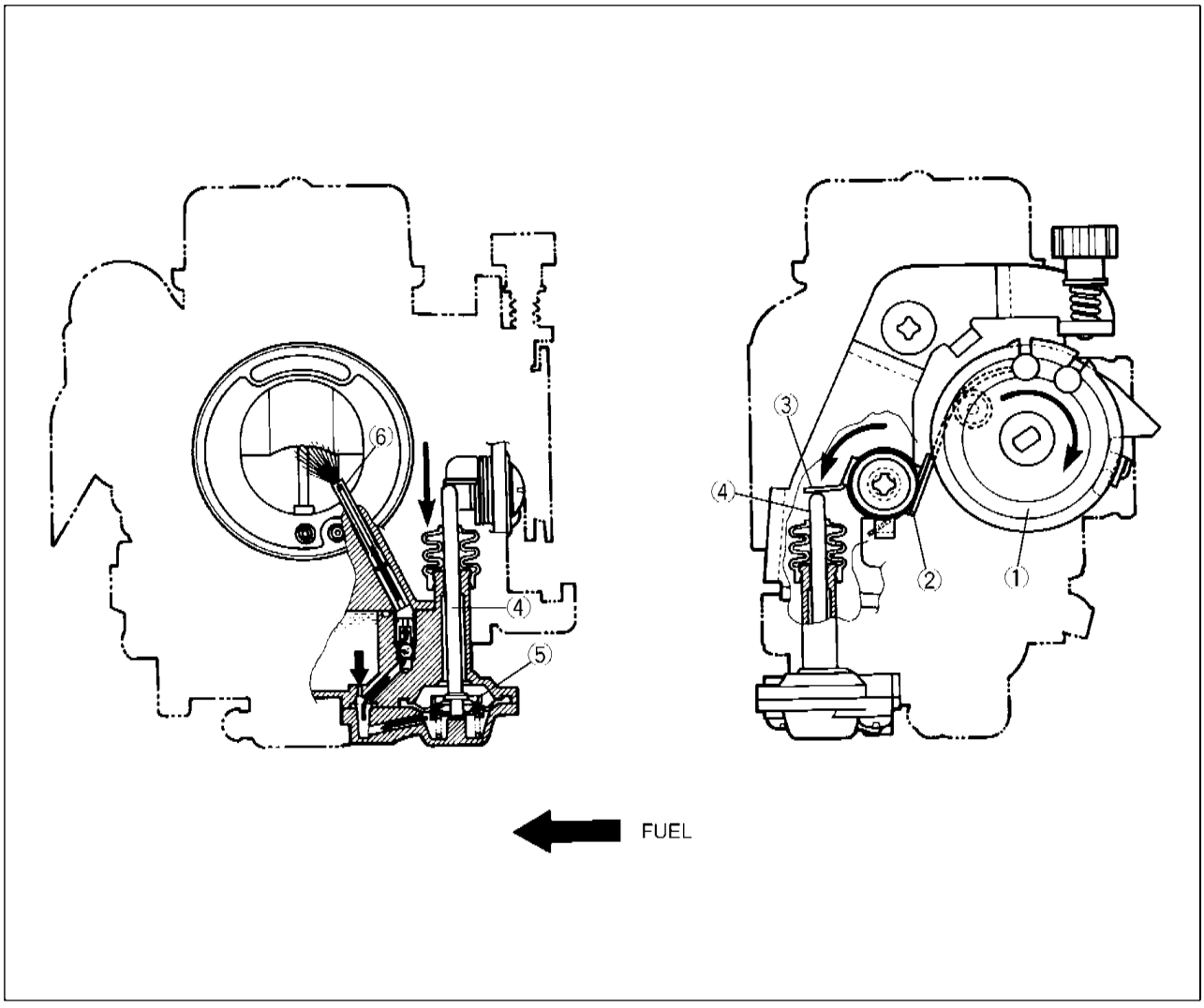

REMOVAL

- Remove the front frame cover and seat. (See page 6-1.)
- Remove the front helmet box cover and helmet box. (See page 6-1.)
- Remove the air cleaner box mounting bolt.

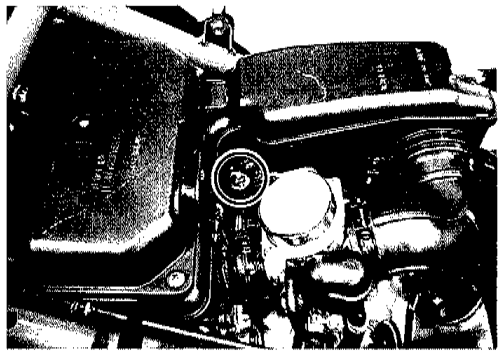

- Loosen the air cleaner clamp screw.
- Loosen the carburetor clamp screw.

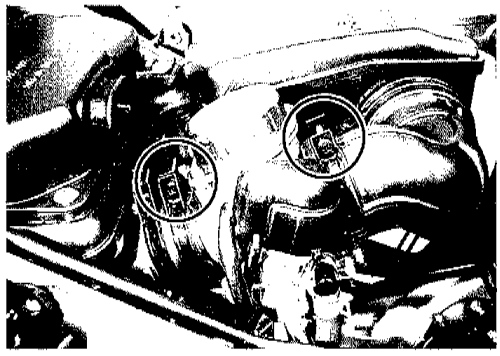

- Remove the breather hose ① and the air cleaner box.

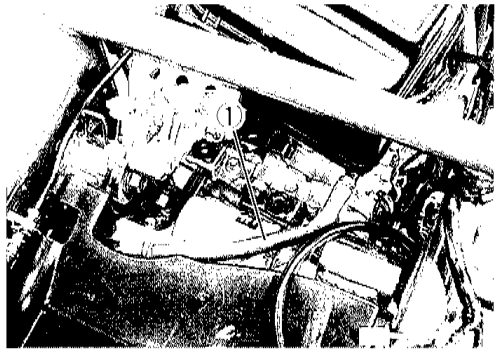

- Disconnect the fuel hose ② and the carburetor heater terminal ③.

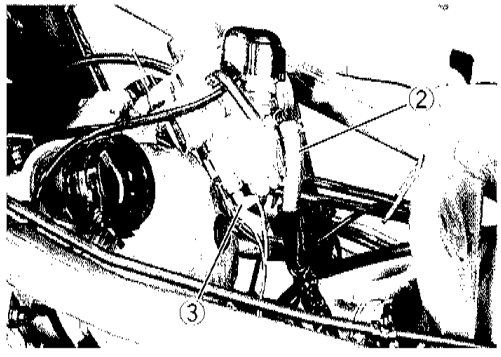

- Disconnect the throttle cables.
- With the auto-enrichener lead wire coupler ④ removed, remove the carburetor.

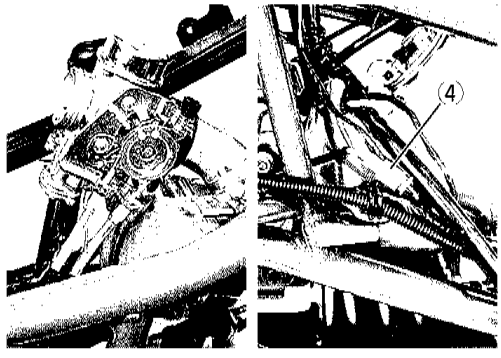

DISASSEMBLY

- With the auto-enrichener cover ① removed, remove the auto-enrichener assembly ②.

NOTE:

The auto-enrichener assembly is a non-disassemblable type.

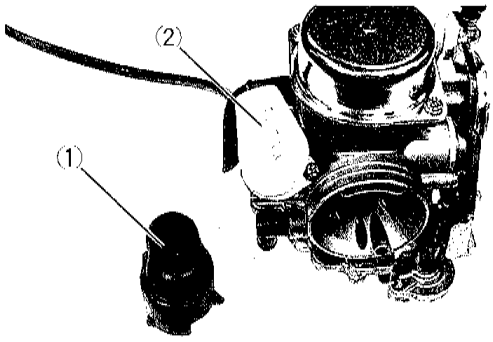

- Remove the carburetor heater ③.
  (Except for E-18 and -22)

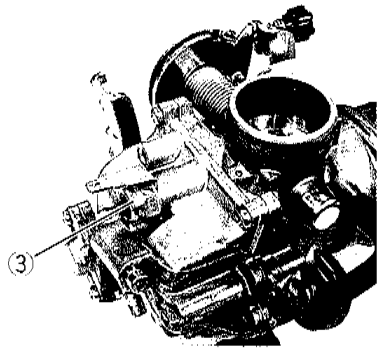

- Remove the throttle cable bracket.

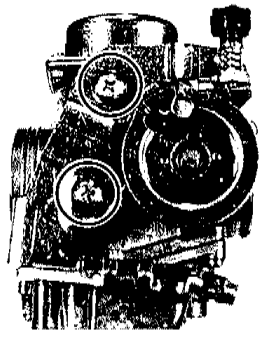

- Remove the top cap.

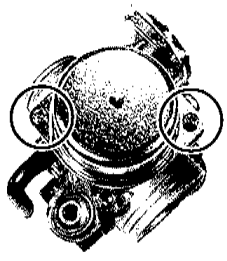

- Remove the spring ④, spring retainer ⑤, jet needle ⑥ and throttle valve ⑦.

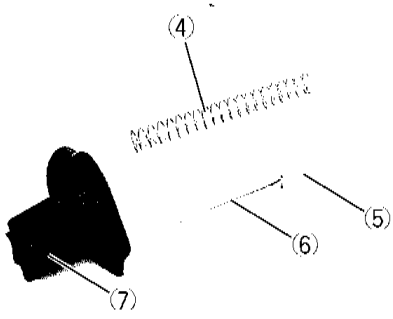

- Remove the coasting enrichment valve cover①and then take out the spring.

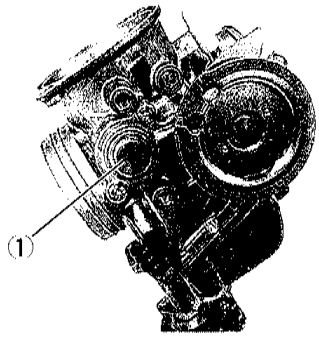

- Remove the coasting enrichment valve ② and O-ring ③.

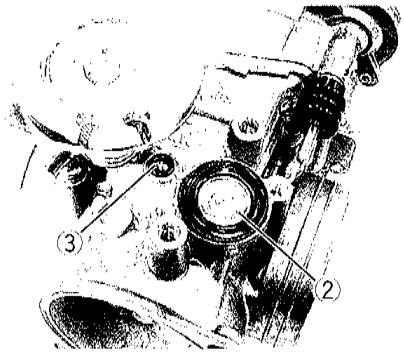

- Remove the accelerating pump cover④and rubber boot ⑤.

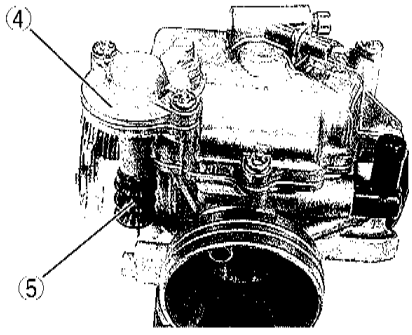

- Remove the accelerating plunger ⑥ and O-ring ⑦.

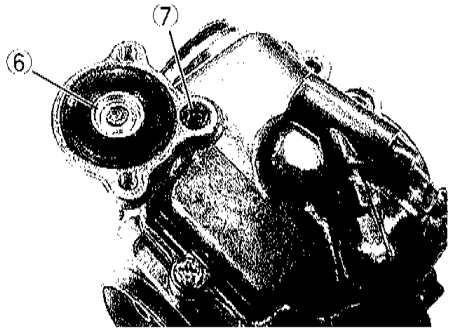

- Remove the float chamber.

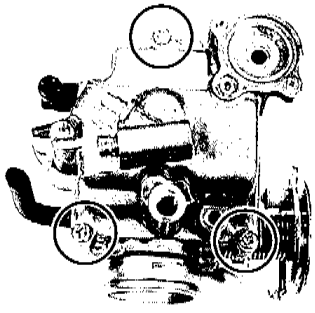

- Remove the accelerating pump jet ①, spring ② and ball ③.

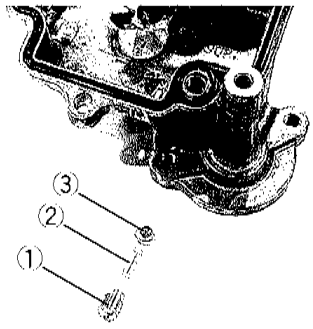

- Loosen the screw ④ and remove the float chamber ⑤ and needle valve ⑥.

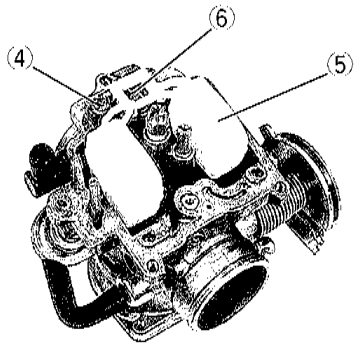

- Remove the pilot jet ⑦, main jet ⑧ and needle jet holder ⑨.

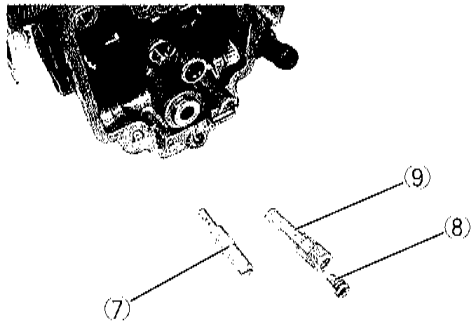

- Remove the pilot air jets No.1 ① and No.2 ②.

⚠CAUTION

> * **Do not remove the main air jet ③.**
> * **It is press-fitted at the factory and attempting to remove it will cause damage.**

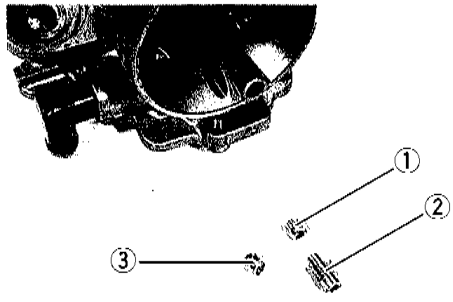

- Remove the pilot screw ④. (Excep for E-18)

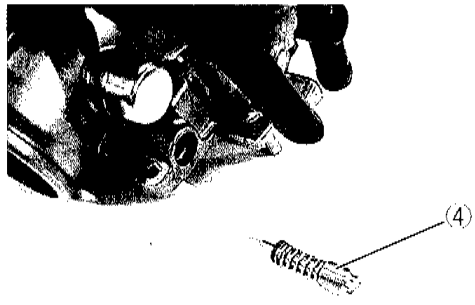

PILOT SCREW REMOVAL (For E-18)

Because harsh cleaning solvents can damage the O-ring seals in the pilot system, the pilot system components should be removed before cleaning.

- Use a 1/8" size drill bit with a drill-stop to remove the pilot screw plug. Set the drill-stop 6 mm from the end of the bit to prevent drilling into the pilot screw. Carefully drill through the plug.
- Thread a self-tapping sheet metal screw into the plug. Pull on the screw head with pliers to remove the plug. Carefully clean any metal shavings from the area.
- Slowly turn the pilot screw clockwise and count the number of turns until the screw is lightly seated. Make a note of how many turns were made so the screw can be reset correctly after cleaning.
- Remove the pilot screw along with the spring, washer, and O-ring.
- After cleaning, reinstall the pilot screw to the original setting by turning the screw in until it lightly seats, and then backing it out the same number of turns counted during disassembly.
- Install a new plug by tapping it into place with a punch.

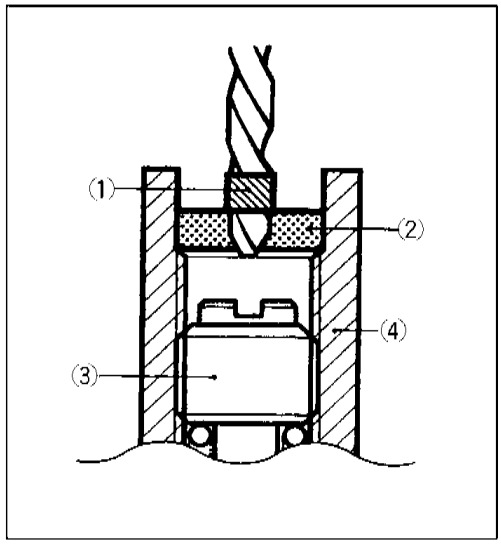

① Drill-stop
② Plug
③ Pilot screw
④ Carburetor body

INSPECTION

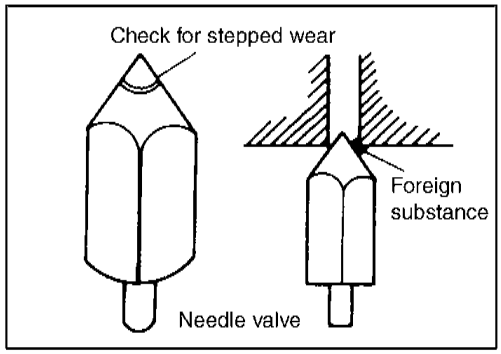

Check the following parts for damage and clogging.

* Pilot jet
* Main jet
* Main air jet
* Pilot air jet No.1 & No.2
* Needle jet holder
* Float
* Jet needle
* Piston valve
* Starter jet
* Gaskets and O-rings
* Pilot outlet and bypass
* Coasting enrichement valve
* Needle valve
* Valve seat

If any abnormal condition is found, wash the part clean. If damage or clogging is found, replace the part with a new one.

CARBURETOR CLEANING

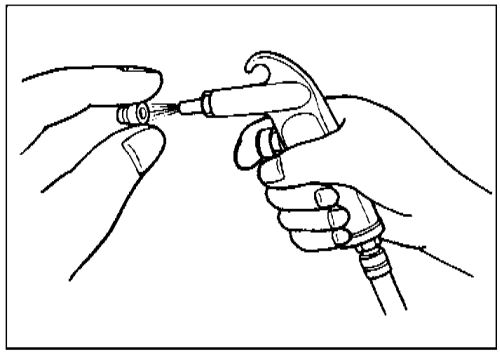

⚠WARNING

Some carburetor cleaning chemicals, especially diptype soaking solutions, are very corrosive and must be handled carefully. Always follow the chemical manufacturer's instructions on proper use, handling and storage.

- Clean all jets with a spray-type carburetor cleaner and dry them using compressed air.
- Clean all circuits of the carburetor thoroughly-not just the perceived problem area. Clean the circuits in the carburetor body with a spray-type cleaner and allow each circuit to soak, if necessary, to loosen dirt and varnish. Blow the body dry using compressed air.

⚠CAUTION

Do not use a wire to clean the jets or passageways. A wire can damage the jets and passageways. If the components cannot be cleaned with a spray cleaner it may be necessary to use a dip-type cleaning solution and allow them to soak. Always follow the chemical manufacturer's instructions for proper use and cleaning of the carburetor components.

- After cleaning, reassemble the carburetor with new seals and gaskets.

AUTO-ENRICHENER INSPECTION

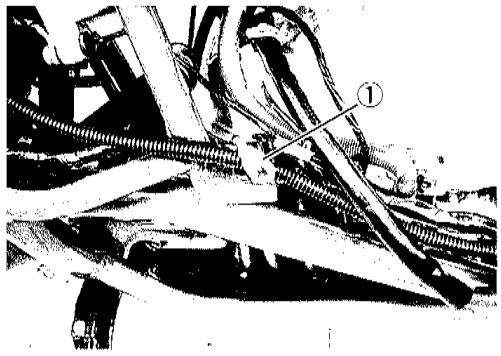

- Disconnect the lead wire coupler ①. (See page 4-17.)
- Remove the cover ②.
- Connect the positive ⊕ terminal of a 12V battery to Yellow/white lead and the negative ⊖ terminal to Black/white.
- Check that the auto-enrichener section ③ (PTC heater built-in area) is heated in 5 minutes after the battery has been connected.

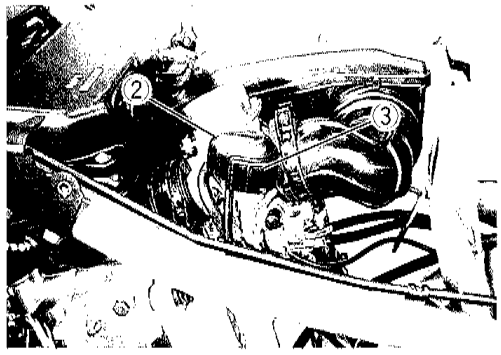

NOTE:

To inspect the function, check for change of temperature from the cold condition.

⚠CAUTION

Do not attempt to disassemble the auto-enrichener for the purpose of checking temperature.

CARBURETOR HEATER INSPECTION

(Except for E-18 and -22)

- Disconnect the carburetor heater terminal lead wires.
- Connect the positive ⊕ terminal of a 12V battery to the terminal ① of the carburetor heater and the battery negative ⊖ terminal to the terminal ②.
- Check that the heater section Ⓐ is heated in 5 minutes after the battery has been connected.

THERMO-SWITCH INSPECTION

(Except for E-18 and -22)

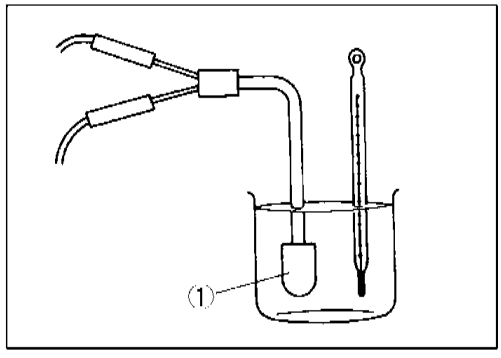

- Cool the thermo-switch ① with ice water and check for continuity.

TOOL 09900-25008: Multi-circuit tester

Thermo-switch continuity	Below 3-9℃	Yes
	Above 10-16℃	No

FLOAT HEIGHT ADJUSTMENT

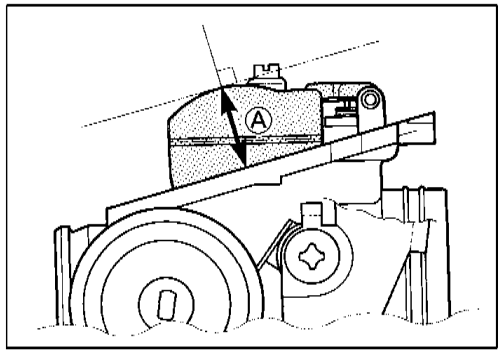

To check the float height, turn the carburetor upside down. Measure the float height Ⓐ while the float arm is just contacting the needle valve using vernier calipers.

Bend the tongue as necessary to bring the float height Ⓐ to the specified level.

TOOL 09900-20102: Vernier calipers

Float height Ⓐ : 23.0 ± 1.0 mm

FUEL LEVEL ADJUSTMENT

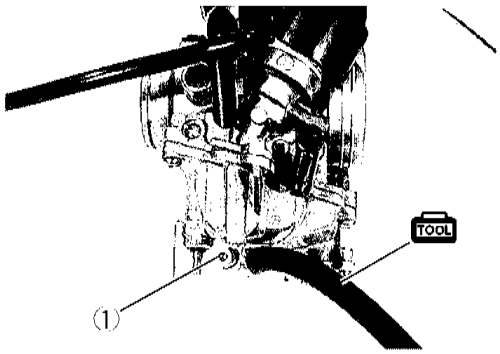

- Install the special tool to the carburetor drain outlet.
- Loosen the drain bolt ①.

TOOL 09913-10760: Fuel level gauge

- Adjust the carburetor to the proper angle holding the body with a vice or the like.

Carburetor set position	Lateral direction: Horizontal
	Longitudinal direction: Horizontal

- Fill gasoline in the carburetor.
- Remove air completely from the fuel level gauge.
- With the level gauge held vertical, lower the gauge slowly and align the datum plane ② with the gauge graduation. (See illustration below.)
- Wait until the fuel level stabilizes.
- Determine the zero point on the gauge graduation and after waiting again for level stabilization, measure the height from the datum plane.

WARNING

This inspection must be performed in an area well ventilated, away from fire or sparks since gasoline, an explosive fluid, is used in this operation.

Fuel level: 6.5±1mm from datum plane

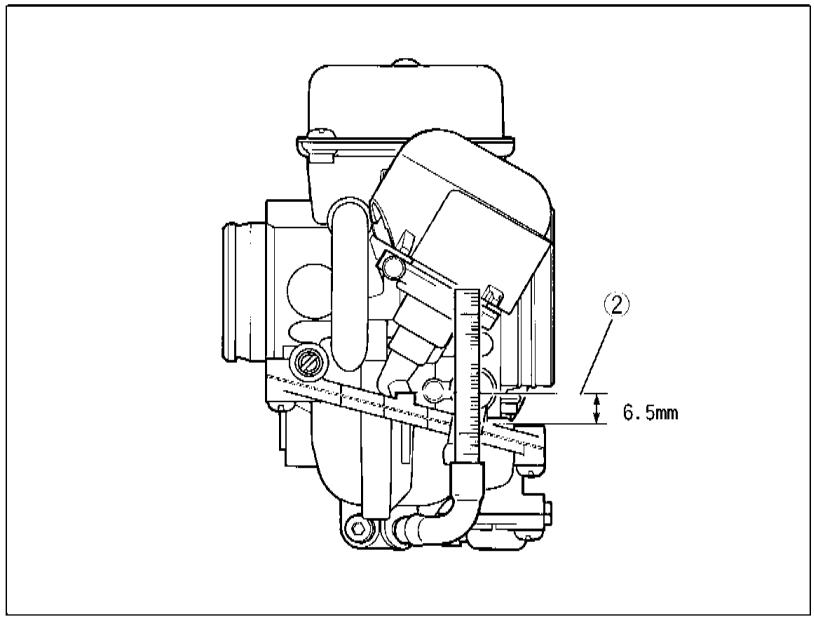

NOTE:

The apparent fuel level measured in the level gauge is higher than the actual level in the float chamber because of meniscus effect. (Meniscus is approximately 1mm.)

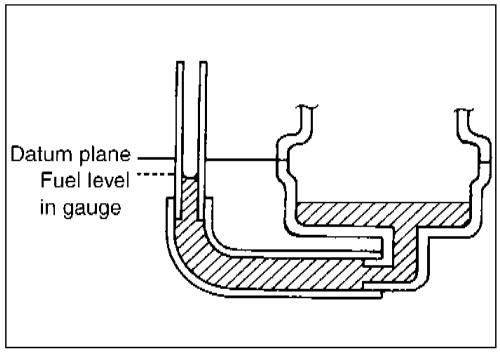

REASSEMBLY AND REINSTALLATION

Carburetor reassembly can be performed in the reverse order of disassembly. When reassembling, carefully observe the following instructions.

⚠CAUTION

- **Assemble the parts taking consideration of their function.**
- **Replace O-rings and seals with new ones.**

- Fit the gasket ① securely to the float chamber.

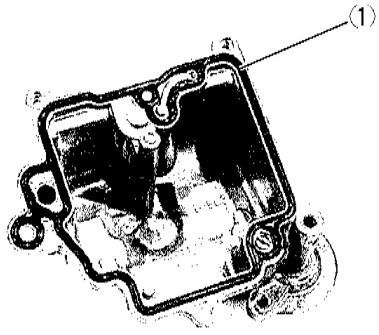

- Assemble the accelerating pump plunger② / diaphragm and O-ring ③.

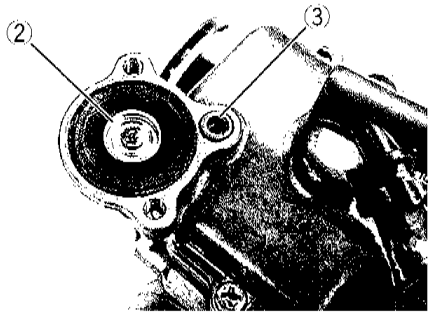

- Assemble the coasting enrichment valve ④ and O-ring ⑤.

NOTE:
Position the rounded side of O-ring ⑤ facing inside.

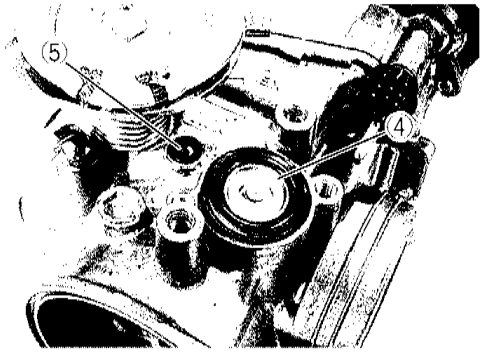

- Assemble the jet needle ⑥, spring retainer ⑦ and spring ⑧.

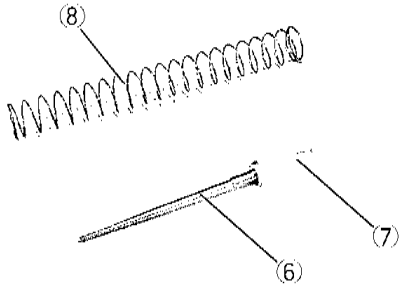

- Apply thermo-grease to the threads ① and tighten the carburetor heater. (Except for E-18 and -22)

99000-59029: THERMO-GREASE

Carburetor heater: 3 N · m (0.3 kg-m)

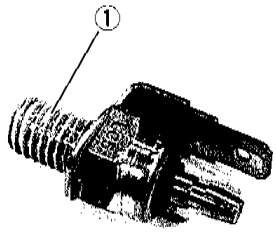

- Apply thread lock to the screw and tighten the throttle cable bracket.

99000-32110: THREAD LOCK "1322"

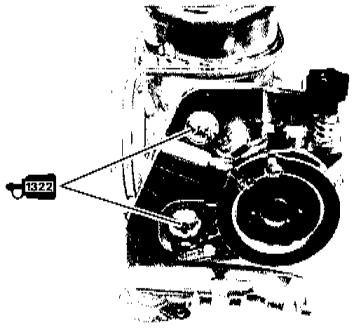

NOTE:

Check that the accelerating pump plunger operates smoothly and together with the throttle pulley when turned.

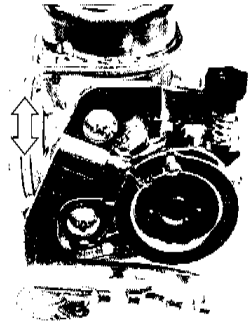

- After cleaning, reinstall the pilot screw to the original setting by turning the screw in until it lightly seats, and then backing it out the same number of turns counted during disassembly.

⚠CAUTION

Replace the O-ring with a new one.

- After the assembly and installation on the engine have been completed, perform the following adjustment.
  - Throttle cable adjustment (See page 2-6.)
  - Idle speed adjustment (See page 2-6.)

LUBRICATION SYSTEM

OIL PRESSURE

See page 2-18.

OIL FILTER

See pages 2-9 and -10.

OIL SUMP FILTER

See pages 3-15 and -59.

OIL PUMP

See pages 3-16 and -58.

OIL NOZZLE

See pages 3-19 and -53.

LUBRICATION SYSTEM CHART

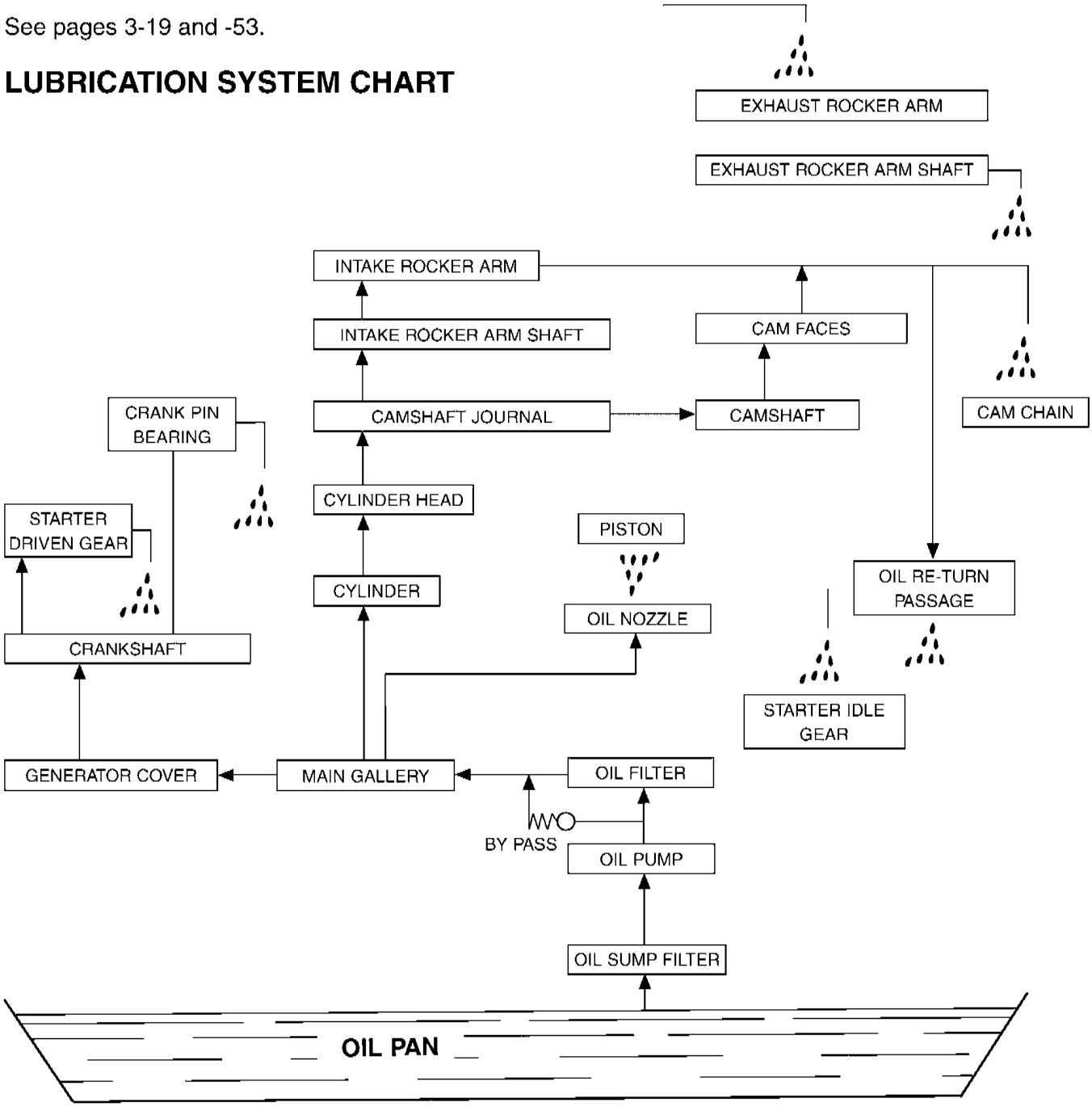

COOLING SYSTEM

CONTENTS

⚠ WARNING

- **Do not remove the radiator cap while the engine is hot. If the cap is opened quickly, scalding fluid and steam can blow out under pressure, possibly causing danger of burning your hand. If the cap is to be opened, cover the cap with thick cloth, slowly turn the cap until the first stop is felt, let the radiator pressure to escape and thereafter open the cap by further turning.**
- **The cooling system service must be performed when the engine is sufficiently cooled.**
- **Coolant is a harmful material and therefore use caution for the following.**
  - **If coolant comes in contact with skin or gets in eyes, immediately flush with water.**
  - **If swallowed, induce vomiting and call physician immediately.**
  - **Keep coolant in a safe place, away from children.**

ENGINE COOLANT

At the time of manufacture, the cooling system is filled with a 50:50 of pure water and coolant. This 50:50 mixture will provide excellent heat protection, and will protect cooling system from freezing at temperature above -30℃.
If the motorcycle is to be exposed to temperature below -30℃, this mixture ratio should be increased up to 55% or 60%.

⚠CAUTION

- **Coolant used should be of a high quality ethylene-glycol base mixed with distilled water.**
- **Do not use an alcohol base coolant.**
- **The mixture ratio should not be higher than 60% and lower than 50%.**
- **Do not use sealing additives in cooling solution.**

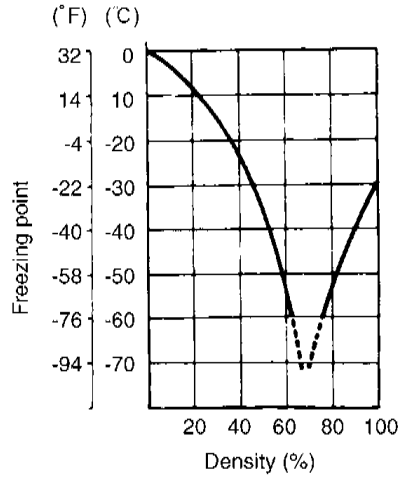

Fig. 1 Engine coolant density-freezing point curve.

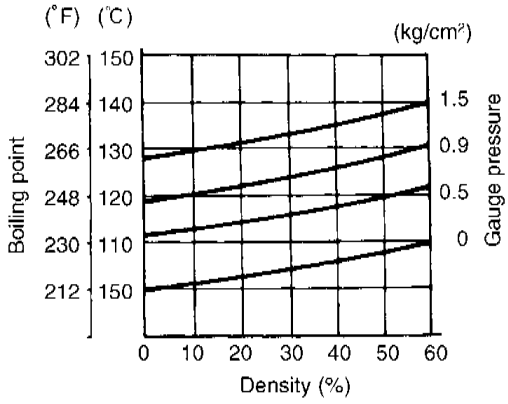

Fig. 2 Engine coolant density-boiling point curve.

RADIATOR AND WATER HOSES

REMOVAL

- For the replacing procedure of coolant, refer to page 2-7.
- Remove the leg shield. (See page 6-1.)
- Place under the water hose a container large enough for receiving coolant.
- Remove the radiator cap.
- Disconnect the radiator hoses ① and ② to let coolant drain off.

⚠WARNING

Do not remove the radiator cap when the radiator is hot.

- Remove the hose ③ and drain coolant remaining inside the engine.

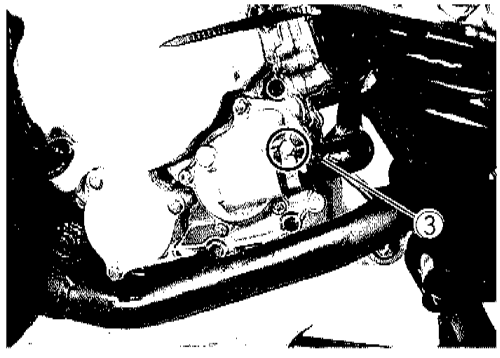

- Remove the radiator hose ① and the radiator cap hose ②.

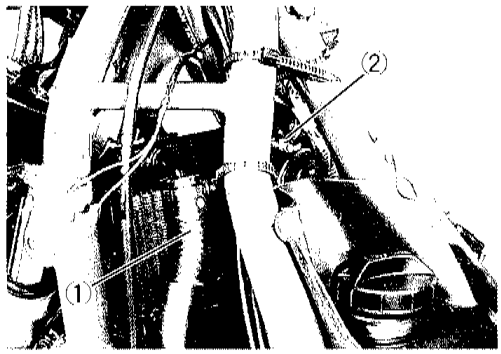

- Remove the cooling fan lead wire coupler ③ and the cooling fan thermo-switch coupler ④.
- Remove the radiator.
- Remove the cooling fan.

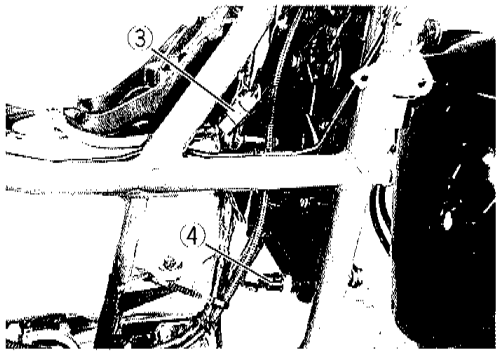

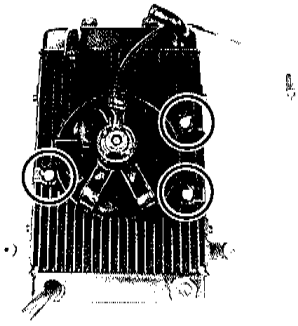

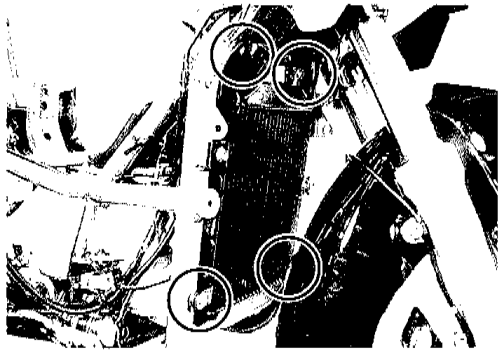

INSPECTION

Before removing the radiator and draining the engine coolant, inspect the cooling system for tightness.

- Remove the leg shield. (See page 6-1.)
- Remove the radiator cap and connect the tester ① to the filler.
- Give a pressure of about 120 kPa (1.2 kg/cm^2, 17 psi) and see if the system holds this pressure for 10 seconds. If the pressure should fall during this 10-second interval, it means that there is a leaking point in the system. In such a case, inspect the entire system and replace the leaking component or part.

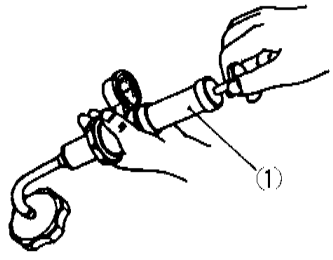

① Radiator cap tester

⚠ WARNING

- **Do not remove the radiator cap when the engine is hot.**
- **When removing the radiator cap tester, put a rag on the filler to prevent spouting of engine coolant.**

⚠CAUTION

Do not allow the pressure to exceed the radiator cap release pressure, or the radiator can be damaged.

RADIATOR CAP INSPECTION

Test the radiator cap for release pressure by using the radiator cap tester in the following manner.

- Fit the cap to the tester, as shown, and build up pressure slowly by operating the tester. Make sure that the pressure build-up stops at 110 ± 15 kPa (1.1 ± 0.15 kg/cm²) and that, with the tester held standstill, the cap is capable of holding that pressure for at leats 10 seconds. Replace the cap if it is found not to satisfy either of these two requirements.

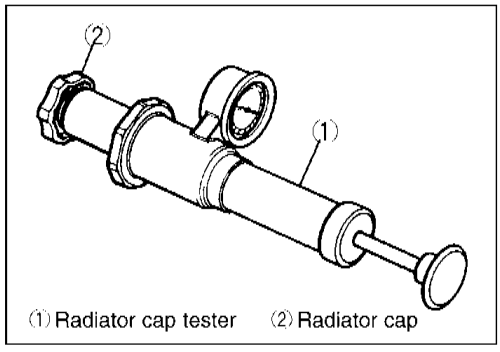

(1) Radiator cap tester (2) Radiator cap

Radiator cap valve
release pressure: 110 ± 15 kPa (1.1 ± 0.15 kg/cm²)

RADIATOR INSPECTION AND CLEANING

- Check the radiator for dirt or small bug stuck between the fins.
- Use compressed air for cleaning. If dirt is excessive, wash with water.
- Fins bent or dented can be straightened using a small plane screwdriver.

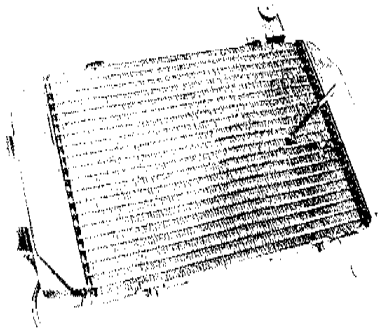

WATER HOSE INSPECTION

- If a crack or deformation is found with the water hose, replace it with a new one. Check for leaks from the joint and if found, retighten the clamp.

REMOUNTING

The remounting can be performed by reversing the removal procedures while observing the following points.

- Tighten the radiator mounting bolts to the specified torque.

Radiator mounting bolt: 10 N · m (1.0 kg-m)

- Install water hoses. (See page 8-11.)
- After the radiator has been installed, fill coolant and perform air bleeding. (See page 2-8.)
- Check that no coolant is leaking.

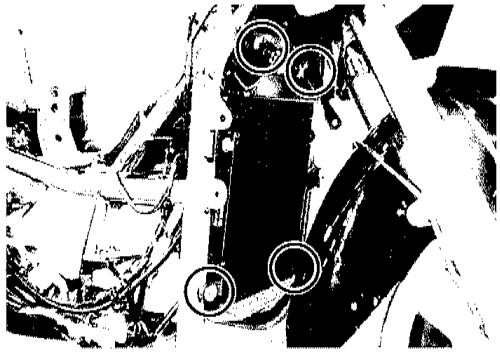

COOLING FAN

REMOVAL

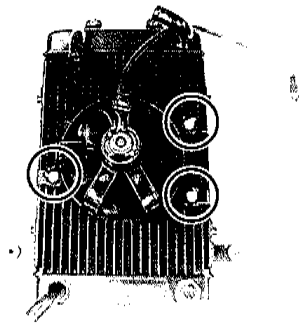

- Remove the radiator. (See page 5-2.)
- Remove the cooling fan.(See page 5-2.)

INSPECTION

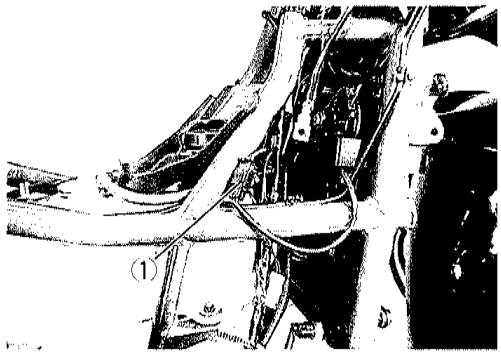

- Remove the front box. (See page 6-1.)
- Disconnect the cooling fan lead wire coupler ①.
- Connect an ammeter as shown in the right diagram and measure load current.

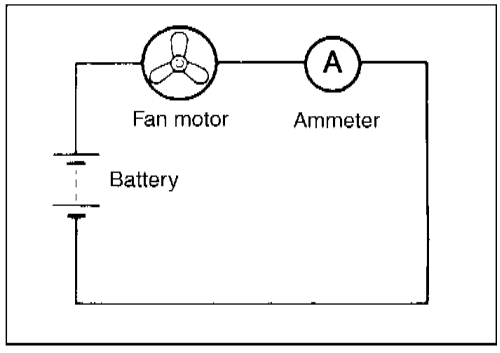

NOTE:
Removing the cooling fan from the motorcycle is not necessary in the above test.

TOOL 09900-25008: Multi-circuit tester

Load current: 5A maximum

If current is out of specification or the fan does not turn, replace the fan with a new one.

REMOUNTING

Remount the radiator and cooling fan in the reverse order of the removal procedure while observing the following instructions.

- Tighten the cooling fan mounting bolt to the specified torque.

Cooling fan mounting bolt: 10 N·m (1.0 kg-m)
Radiator mounting bolt: 10 N·m (1.0 kg-m)

- After the radiator has been installed, fill cooant and perform air bleeding. (See page 2-8.)

COOLING FAN THERMO-SWITCH

REMOVAL

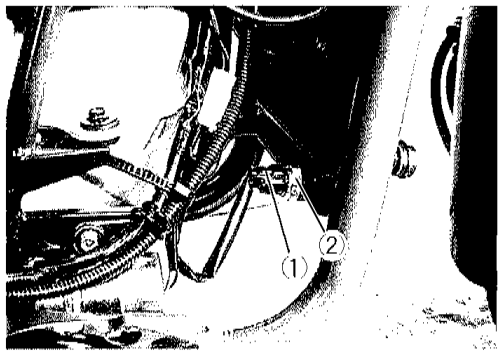

- Remove the front box. (See page 6-1.)
- Disconnect the cooling fan thermo-switch coupler ①.
- Remove the cooling fan thermo-switch ②.

INSPECTION

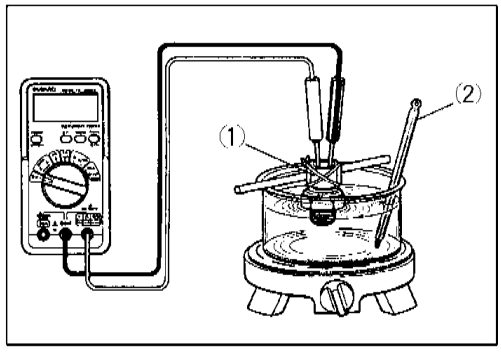

- Place the cooling fan thermo-switch in oil contained in a pan as shown and raise the oil temperature gradually to check for the temperature at which the switch starts to operate.

If the switch operating temperature is not within the specified range, replace the switch with a new one.

TOOL 09900-25008: Multi-circuit tester

OFF → ON	100 - 110℃
ON → OFF	95 - 105 ℃

⚠CAUTION

- **Handle the cooling fan thermo-switch carefully as it is vulnerable to impact.**
- **Do not allow the cooling fan switch ① and the thermometer ② to come in contact with the bottom of the pan.**

INSTALLATION

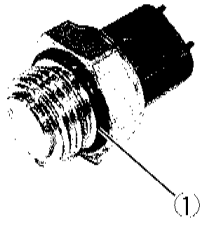

- Fit the O-ring ①.
- Tighten the cooling fan thermo-switch to the specified torque.

Cooling fan thermo-switch: 18 N · m (1.8 kg-m)

⚠CAUTION

- **Replace the O-ring with a new one.**
- **Do not coat grease to the O-ring.**

- After the cooling fan thermo-switch has been installed, fill coolant and perform air bleeding. (See page 2-8.)

WATER TEMPERATURE SENSOR

REMOVAL

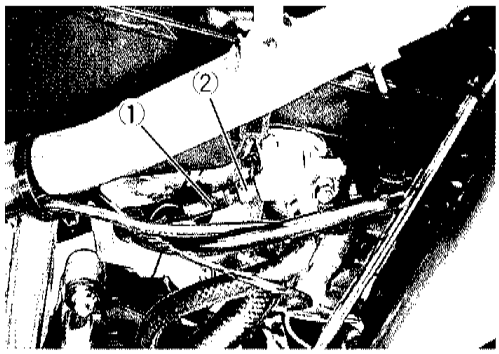

- Remove the frame cover. (See page 6-1.)
- Disconnect the lead wire connector ①.
- Remove the water temperature sensor ②.

INSPECTION

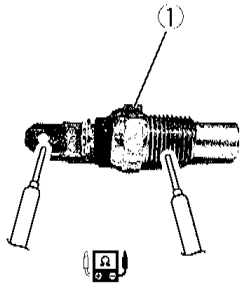

- Connect the water temperature sensor ① to the ohmmeter and dip it in oil contained in a pan which is placed on an electric heater.
- Gradually raise oil temperature while reading the thermometer in the pan and the ohmmeter connected. If the resistance measured is out of specification, replace the temperature gauge with a new one.

TOOL 09900-25008: Multi-circuit tester

TEMPERATURE SENSOR

Temperature	Standard resistance
50 ℃	140 - 310 Ω
115℃	24.1 - 28.2 Ω

⚠CAUTION

- **Handle the water temperature sensor carefully as it is vulnerable to impact.**
- **Do not allow the water temperature sensor and the thermometer to come in contact with the bottom of the pan.**

- After the water temp. Sensor has been installed, fill coolant and perform air bleeding, (See page 2-8.)

INSTALLATION

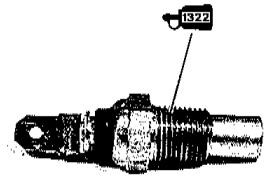

- With thread lock applied to the threaded part, tighten the water temperature sensor.

1322 99000-32110: THREAD LOCK "1322"

Water temperature sensor: 8 N · m (0.8kg-m)

THERMOSTAT

REMOVAL

- Remove the frame cover. (See page 6-1)
- Remove the thermostat case bolts ①.
- Remove the thermostat ②.

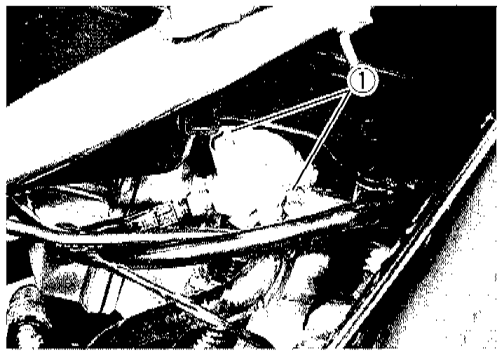

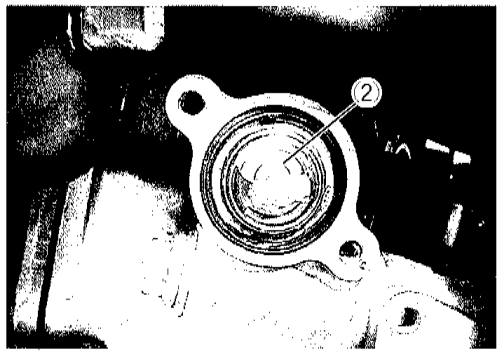

INSPECTION

- Check for crack or break on the thermostat.
- Immerse the thermostat in water contained in a pan as shown and measure the valve start-to-open temperature when water is heated gradually.

If the thermostat valve opening temperature is not within the specified range, replace the thermostat with a new one.

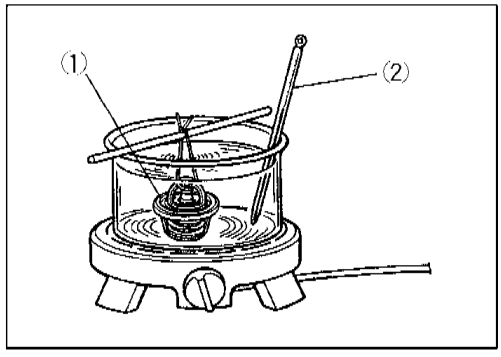

Thermostat valve start-to-open temperature: 70-80℃

⚠CAUTION

- **Do not allow the thermostat ① and thermometer ②to come in contact with the bottom of the pan.**
- **As the thermostat operating response to water temperature change is gradual, do not raise water temperature too quickly.**
- **The thermostat with its valve open even slightly under normal temperature must be replaced.**

- Continue to heat water until 90℃ is exceeded and check for the thermostat valve lift when temperature is at 90℃.

If the valve lift is out of specification or less then the specification, replace the thermostat with a new one.

Thermostat valve lift: 3.0mm

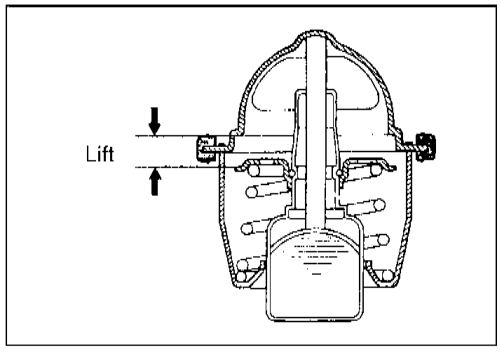

INSTALLATION

- Position the thermostat with the air bleeder hole Ⓐ upside.

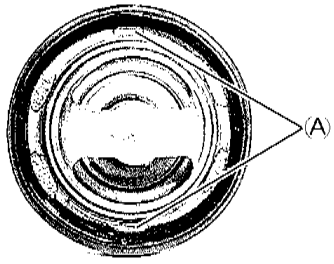

- Install the thermostat case.

Thermostat case bolt: 10 N · m (1.0kg-m)

NOTE:

Tighten the bolt ① together with the clamp and secure the high-tension cord with the clamp.

- After the thermostat has been installed, fill coolant and perform air bleeding. (See page 2-8.)

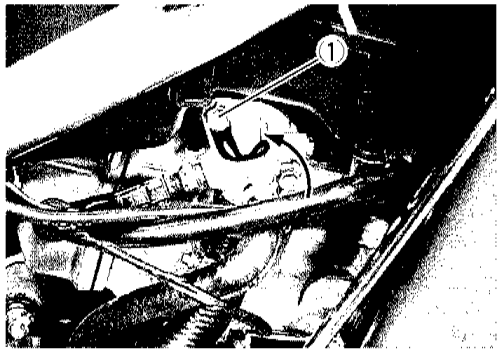

WATER PUMP

REMOVAL

- Drain engine coolant. (See page 2-8.)
- Drain engine oil. (See page 2-9.)
- Disconnect the water hose.
- Remove the water pump case ①.

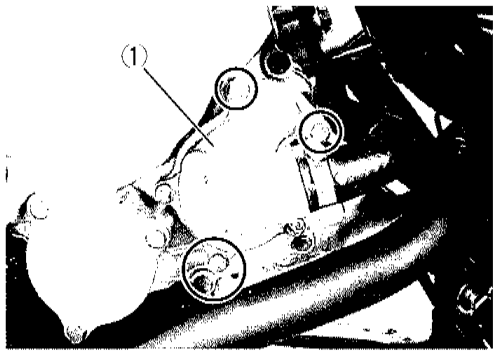

DISASSEMBLY AND INSPECTION

- With the bolt loosened, remove the impeller ②.

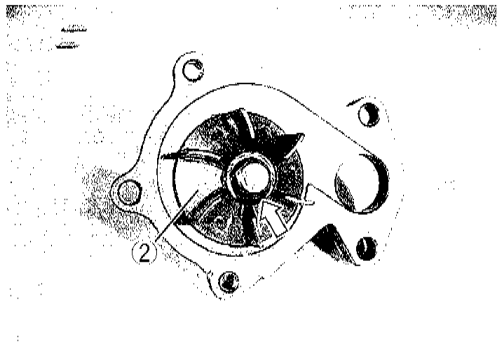

- Draw out the water pump shaft ③.

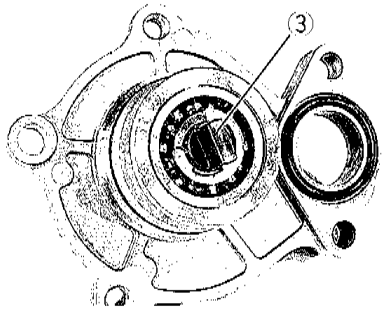

Visually check the mechanical seal surface for damage carefully.
If any sign of leakage is noted, replace the mechanical seal and as necessary together with the oil seal and bearing.

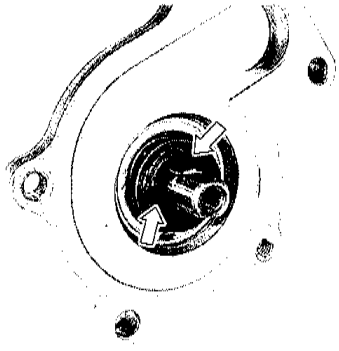

- Remove the mechanical seal ①.

TOOL 09921-20210: Bearing remover
09930-30102: Sliding shaft

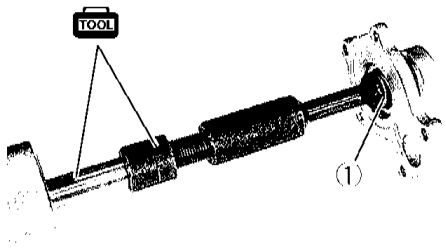

- Remove the oil seal ②.

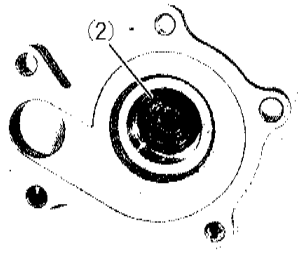

- Remove the bearing.

TOOL 09941-50111: Wheel bearing remover

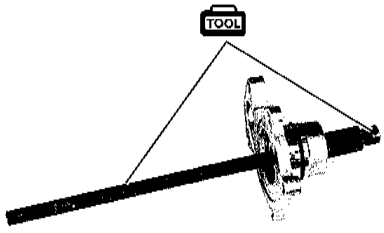

REASSEMBLY

- Press-fit the bearing.

TOOL 09925-98221: Bearing installer

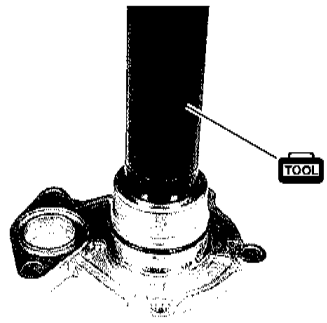

- Prior to installing the oil seal, apply grease to the lip.
- Press-fit the oil seal ① with the stamped mark side to face the mechanical seal side.

99000-25010: SUZUKI SUPER GREACE "A"

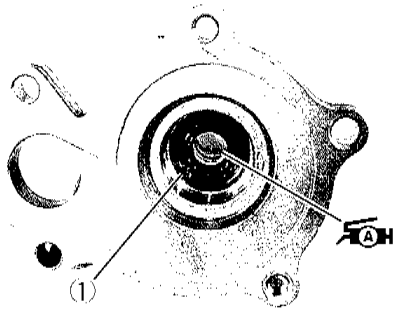

- To press-fit the mechanical seal into the water pump, use a pipe shape material of an appropriate size.

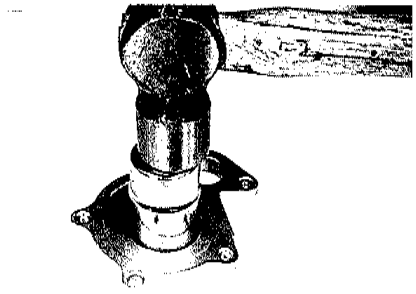

⚠CAUTION

Replace the mechanical seal with a new one.

NOTE:

The new mechanical seal is applied with a sealing agent at the factory.

- Install the water pump shaft ①.

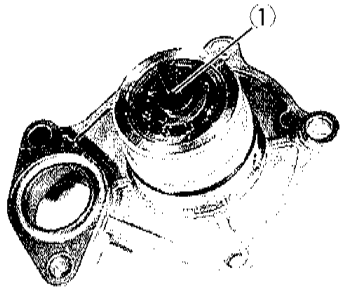

- Fit the seal ② and seal ring ③ on the impeller ①.
- Before fitting to the impeller, apply a little coolant on the sliding surface of the seal ring ③.

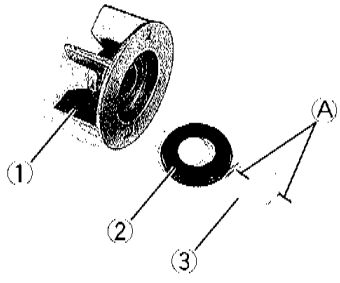

⚠CAUTION

Install the seal ring ③ with the marked side shown as Ⓐ facing the impeller.

- Fit the gasket washer ④ and washer ⑤ and tighten the bolt.

Impeller tightening bolt: 10N · m (1.0kg-m)

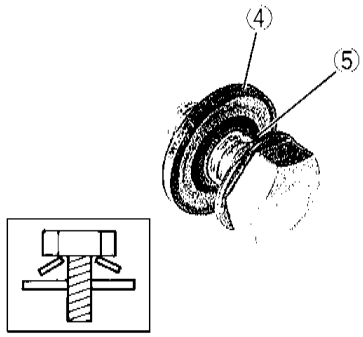

⚠CAUTION

- **The gasket washer ④ of sealing side (rubber) faces the impeller.**
- **Replace the gasket washer ④ with a new one.**

- Install the water pump cover to the water pump with the O-ring ① fitted and grease coated.

99000-25010: SUZUKI SUPER GREASE "A"

- Apply grease to the O-rings ② and ③, and install the water pump case on the engine.

99000-25010: SUZUKI SUPER GREASE "A"

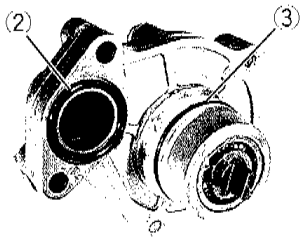

- Install the water pump with the flats on the pump shaft end securely engaged with the slot on the oil pump shaft.

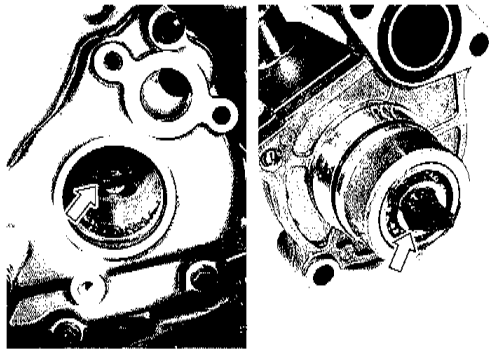

- Tighten the water pump case bolts and install the water hose. (See page 8-11.)

Water pump case bolt: 10N · m (1.0kg-m)

- Pour coolant into the cooling system. (See page 2-8.)
- Start the engine and check for leakage of coolant and oil.

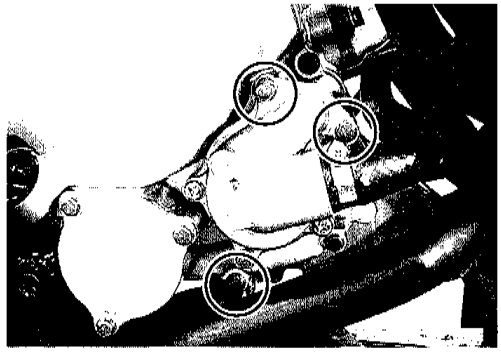

CHASSIS

CONTENTS

⚠CAUTION

The self-lock nut used in many chassis parts requires higher tightening torque than the conventional nut because of higher sliding resistance on the thread. On account of this resistance as a torque value, the tightening torque specification for self-lock nut is made higher than that for the conventional nut. For this reason, using a conventional nut in place of self-lock nut should be avoided.

EXTERIOR PARTS REMOVAL/REMOUNTING

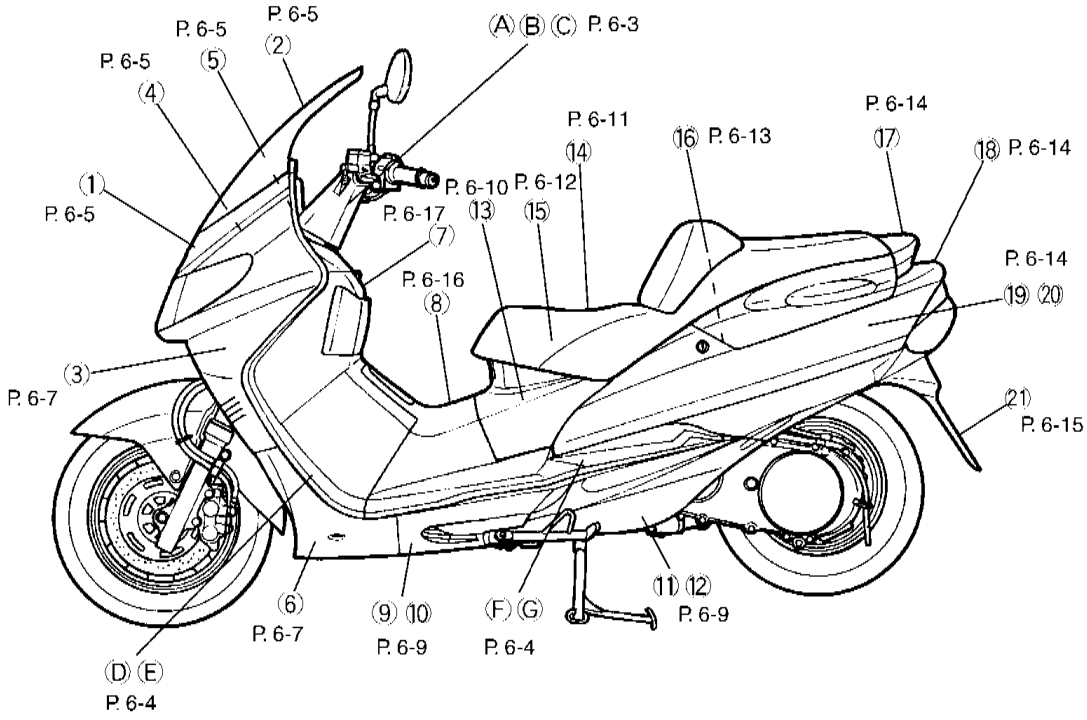

REMOVAL PROCEDURE FLOW CHART

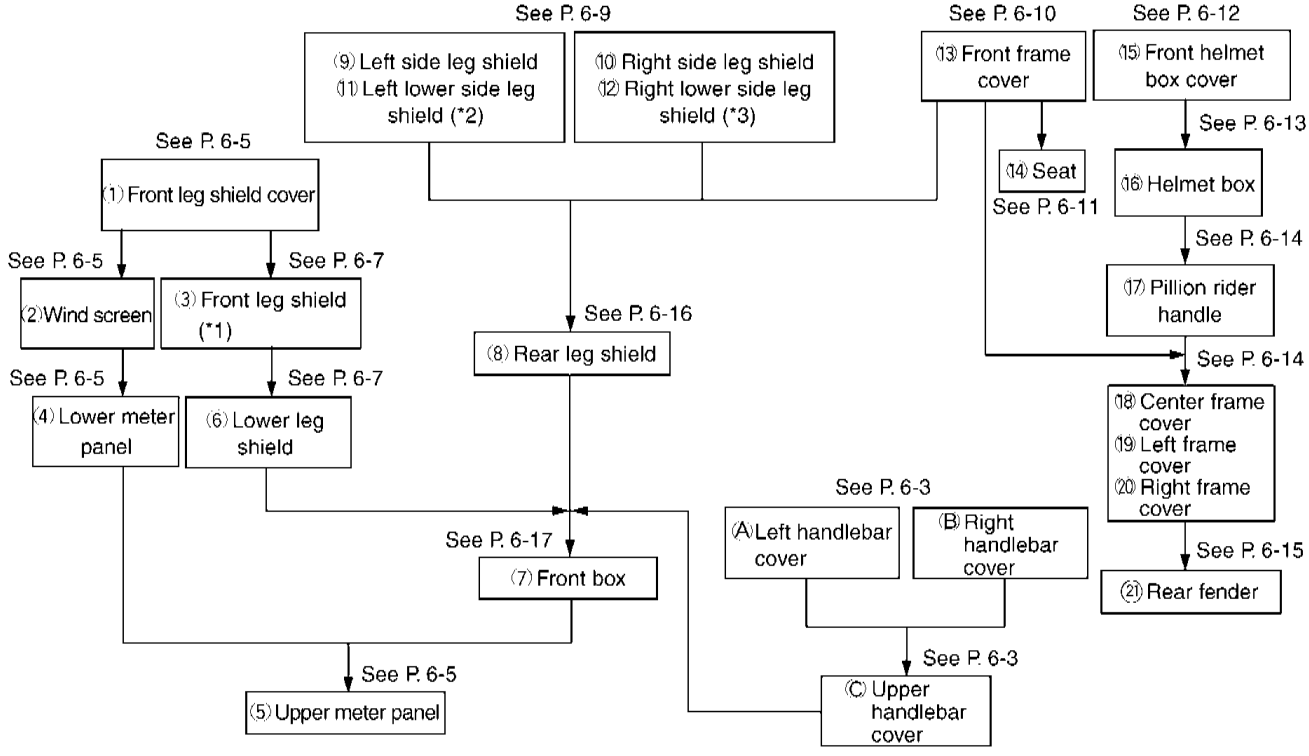

*1: Also remove front floor mats (D) and (E).

*2: Also remove left floor mats (front and rear) (E) and (G).

*3: Also remove right floor mats (front and rear) (D) and (F).

FASTENER REMOVAL AND REINSTALLATION

REMOVAL

- Depress the head of fastener center piece ①.
- Pull out the fastener.

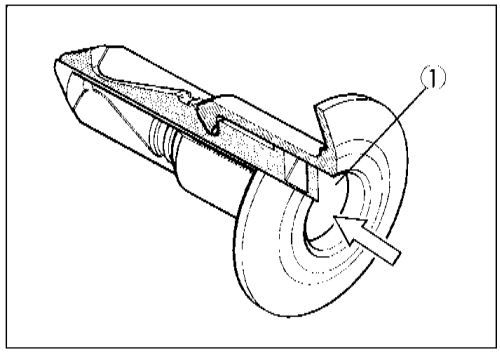

INSTALLATION

- Let the center piece stick out toward the head so that the pawls ② close.
- Insert the fastener into the installation hole.

NOTE:

To prevent the pawl ② from damage, insert the fastener all the way into the installation hole.

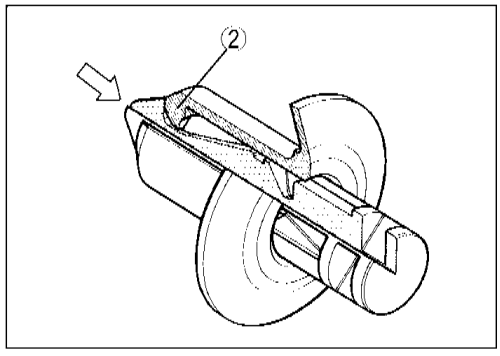

- Push in the head of center piece until it becomes flush with the fastener outside face.

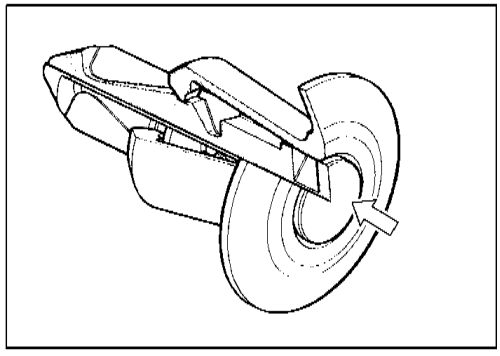

HANDLEBAR COVER

- Remove the left handlebar cover Ⓐ.
- Remove the right handlebar switch case and disconnect the throttle cables.
- Remove the right handlebar cover Ⓑ and upper handlebar cover Ⓒ.

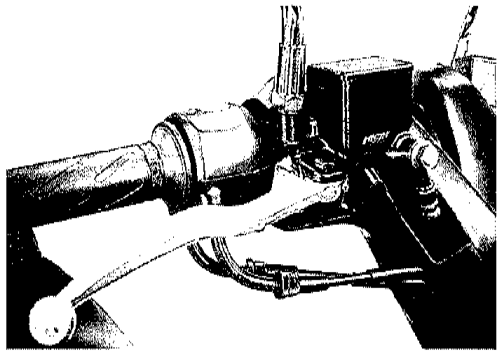

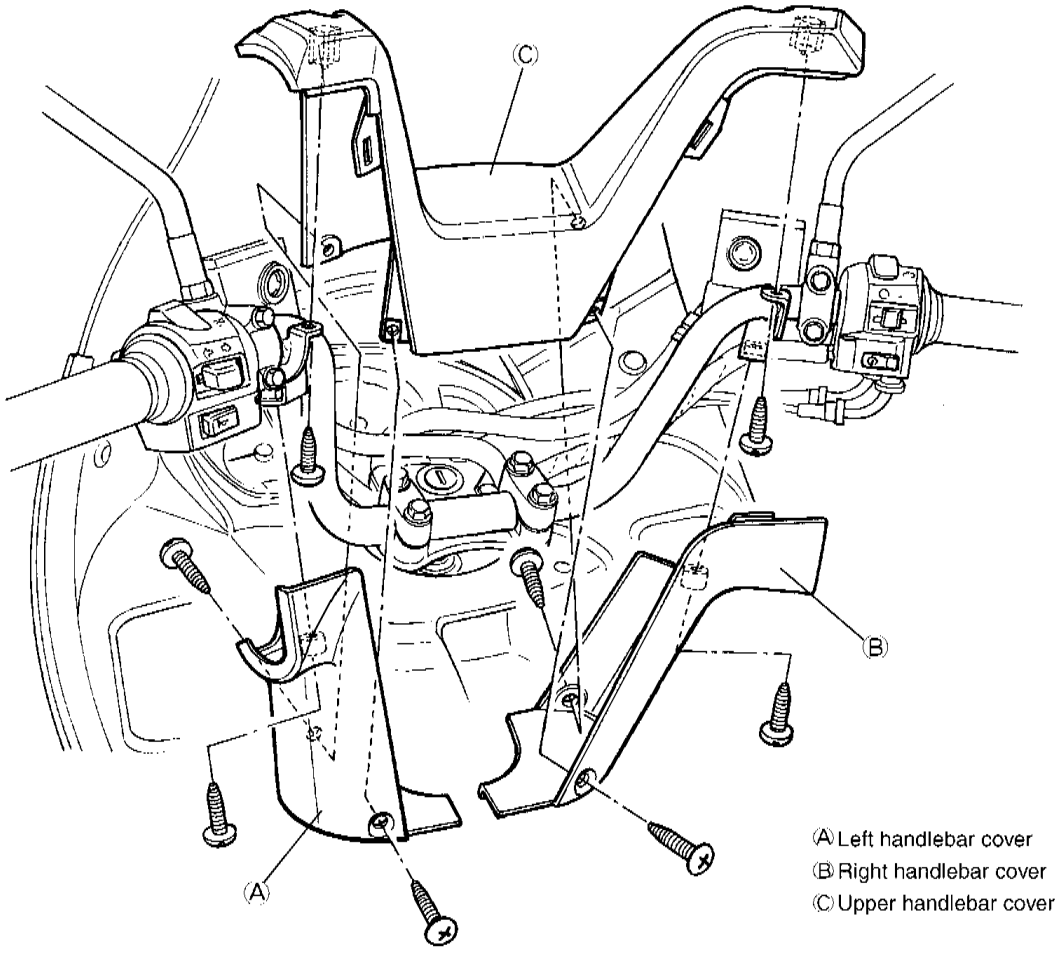

NOTE:

- *When installing the upper handlebar cover Ⓒ, engage the cutout ① with the handlebar and route the cables, hoses and wires in the front area of the cutout ①.*
- *Apply grease to the throttle cables and assemble it to the pulley.*

99000-25010: SUZUKI SUPER GREASE "A"

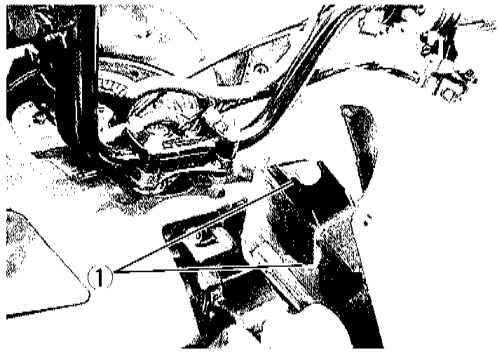

FLOOR MAT

- When installing the floor mat, make sure to insert the hook securely into the cover hole.

NOTE:

If the hook does not engage smoothly, apply soap suds.

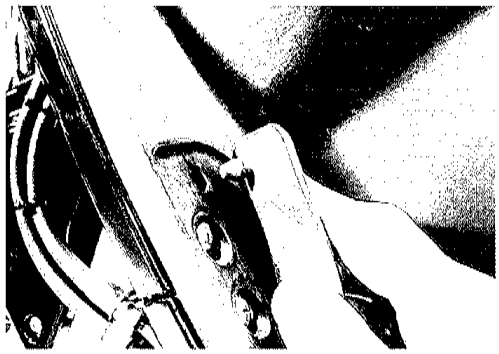

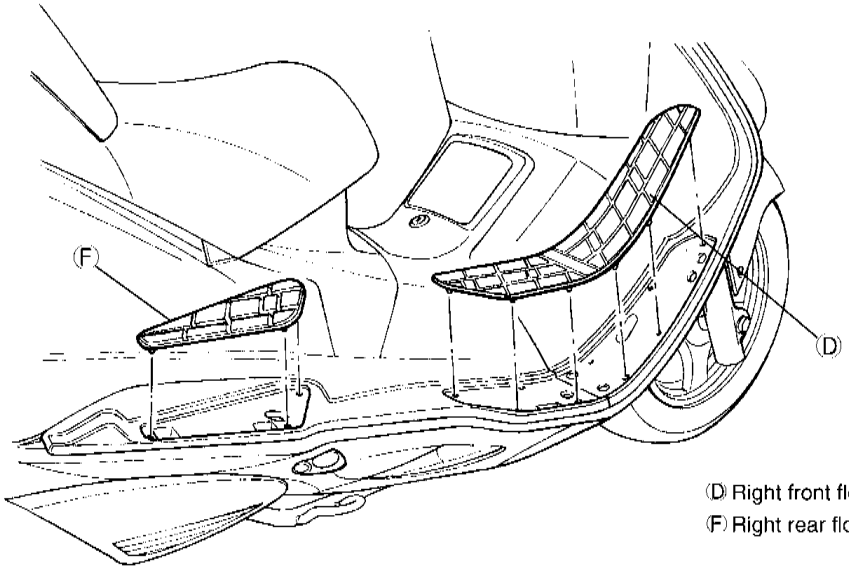

(D) Right front floor mat
(F) Right rear floor mat

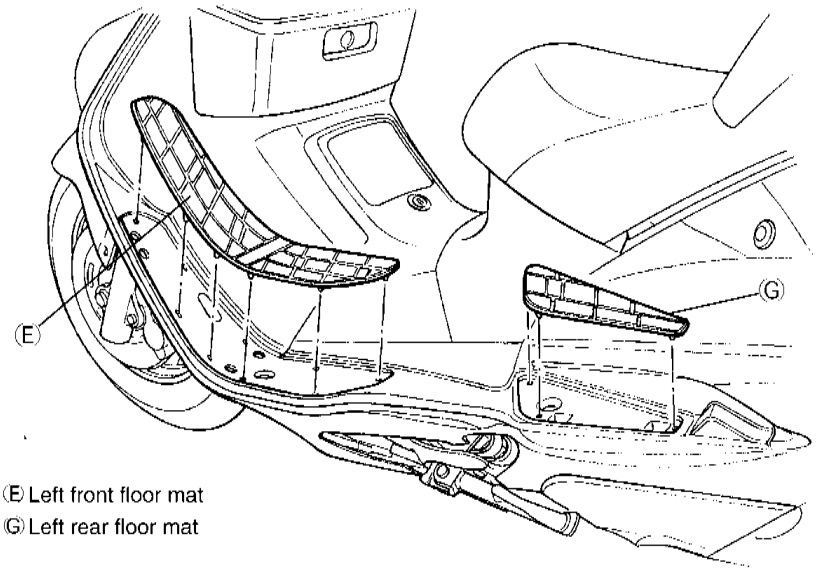

(E) Left front floor mat
(G) Left rear floor mat

FRONT LEG SHIELD COVER

- Loosen the screws (4 pcs) and remove the front leg shield cover ①.

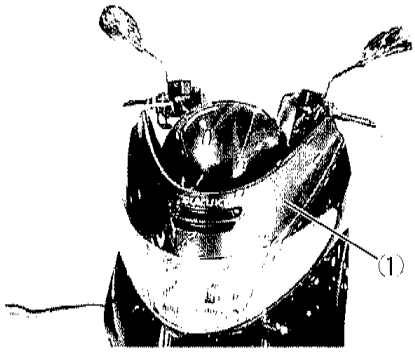

WIND SCREEN

- Remove the front leg shield cover.
- Remove the screws ⓐ (6 pcs).
- Detach the wind screen ②.

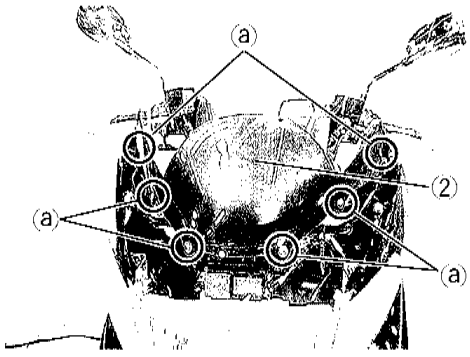

LOWER METER PANEL

- Remove the front leg shield cover and the front wind screen.
- Remove the rubber boot and disconnect the speedometer coupler ⓑ.
- Loosen all the attaching screws and remove the lower meter panel ④ together with the speedometer.

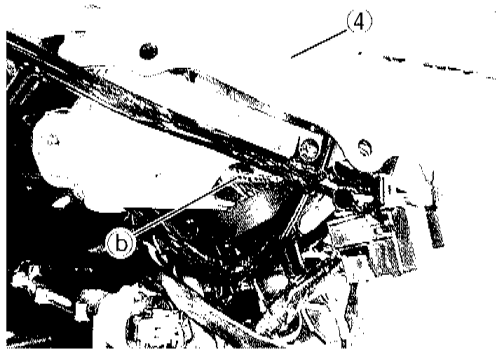

UPPER METER PANEL

- Remove the front box and the lower meter panel.
- Loosen the screws (2 pcs) and remove the upper meter panel ⑤.

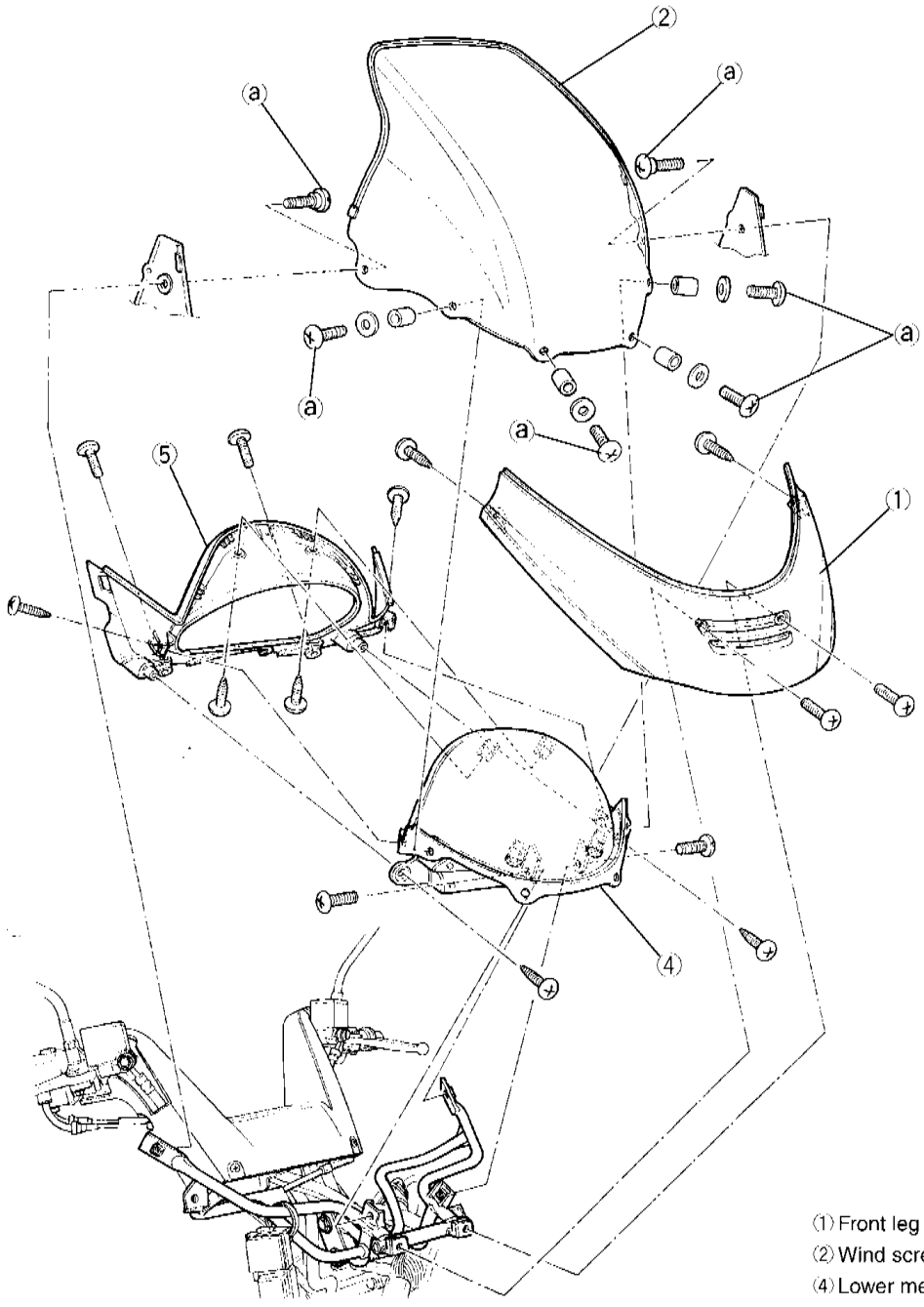

(1) Front leg shield cover
(2) Wind screen
(4) Lower meter panel
(5) Upper meter panel

FRONT LEG SHIELD

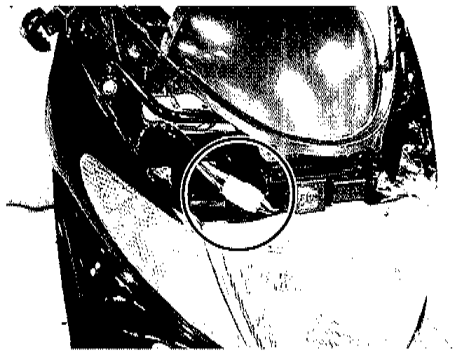

- Remove the front leg shield cover and the wind screen.
- Disconnect the front combination light lead wire coupler.
- Remove the front floor mats.
- With all the attaching screws and fasteners removed, detach the front leg shield.

LOWER LEG SHIELD

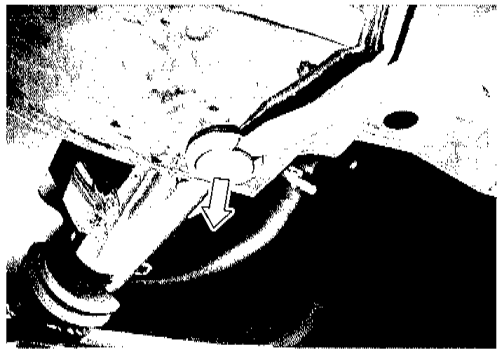

- Remove the front leg shield cover and the front leg shield.
- With all the attaching screws and fasteners removed, detach the lower leg shield.

NOTE:

To remove the fasteners securing the lower leg shield and the right / left side leg shields, pry up the fastener head to loosen and pull out.

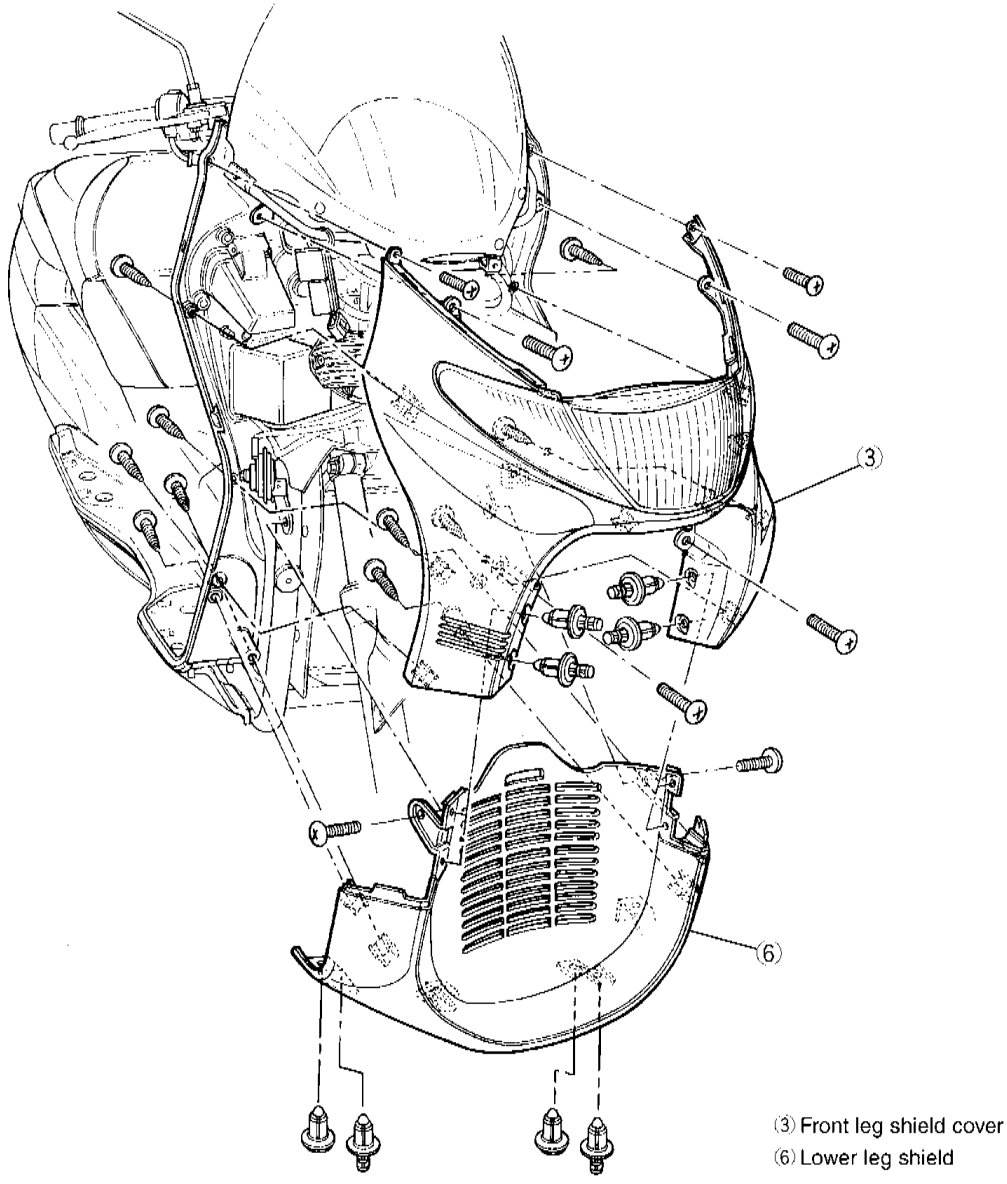
(3)
(6)
(3) Front leg shield cover
(6) Lower leg shield

LEFT / RIGHT SIDE LEG SHIELDS AND LEFT / RIGHT LOWER SIDE LEG SHIELDS

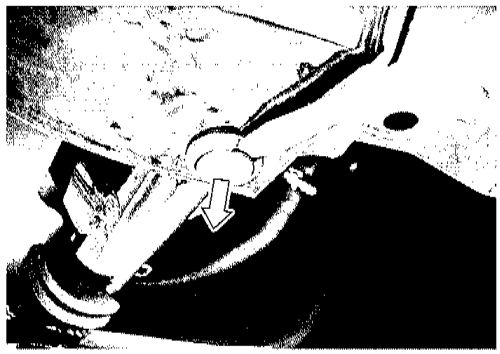

- Remove the front and rear floor mats.
- With all the attaching screws and fasteners removed, detach the left / right side leg shields ⑨ and ⑩.

NOTE:

To remove the fasteners securing the left / right side leg shields and left / right lower side leg shields, pry up the fastener head to loosen and pull out.

- With all the attaching screws and fasteners removed, detach the left / right lower side leg shields ⑪ and ⑫.

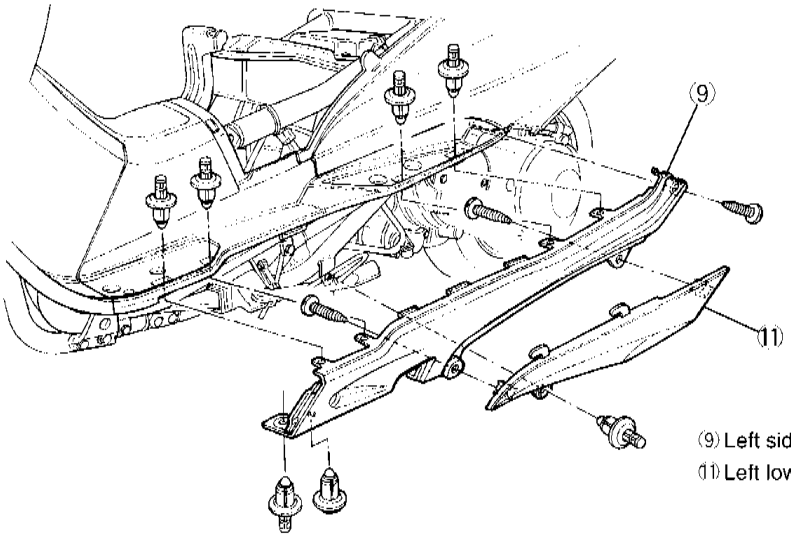

⑨ Left side leg shield
⑪ Left lower side leg shield

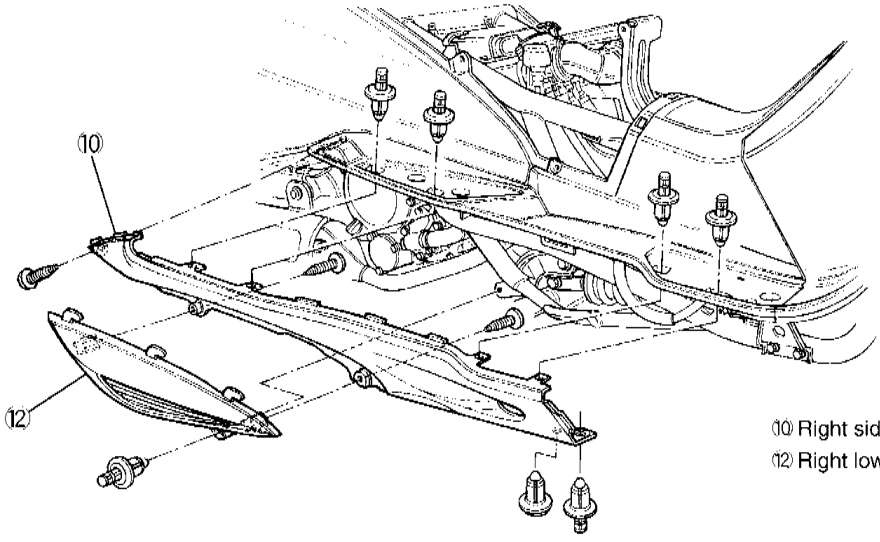

⑩ Right side leg shield
⑫ Right lower side leg shield

FRONT FRAME COVER

- Loosen and remove the screws.
- With the seat lowered, remove the front frame cover ⑬ .

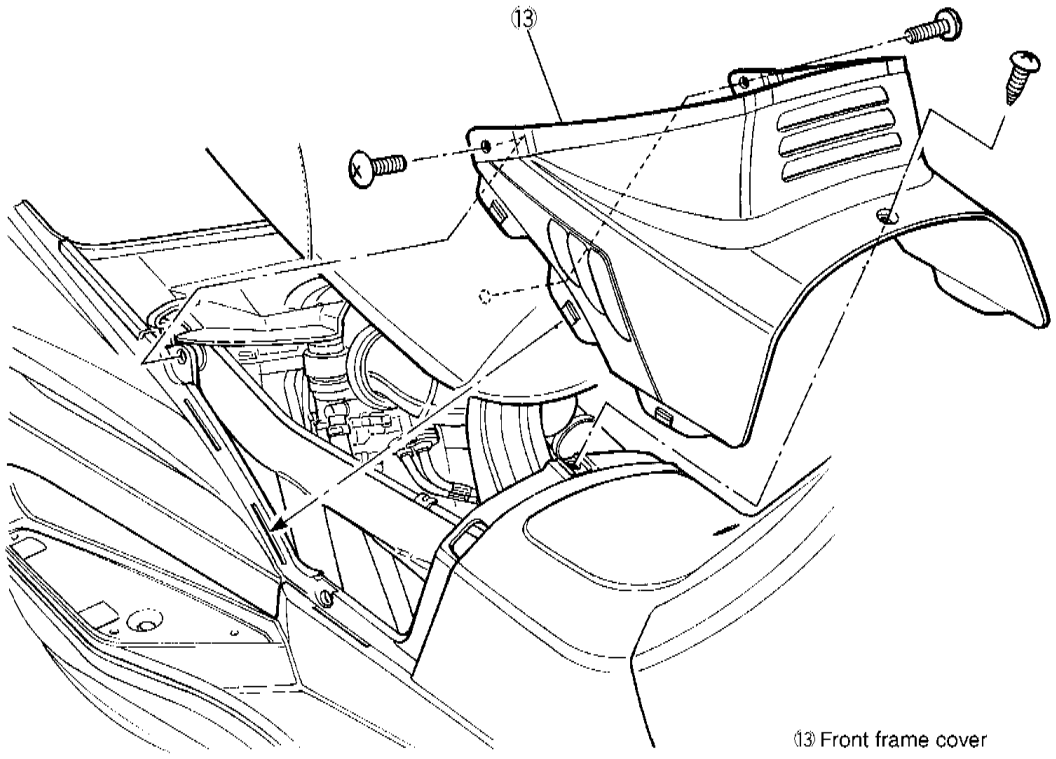

SEAT

- Remove the front frame cover.
- Disconnect the seat damper connection.
- Fold the seat forward, loosen the nuts (4 pcs) and detach the seat.

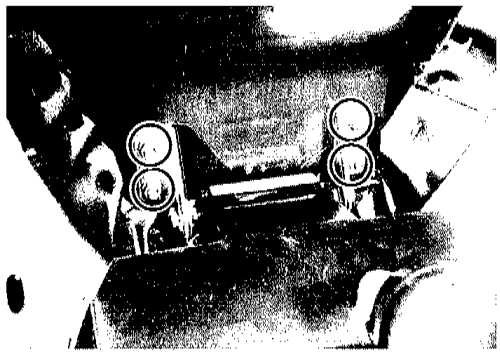

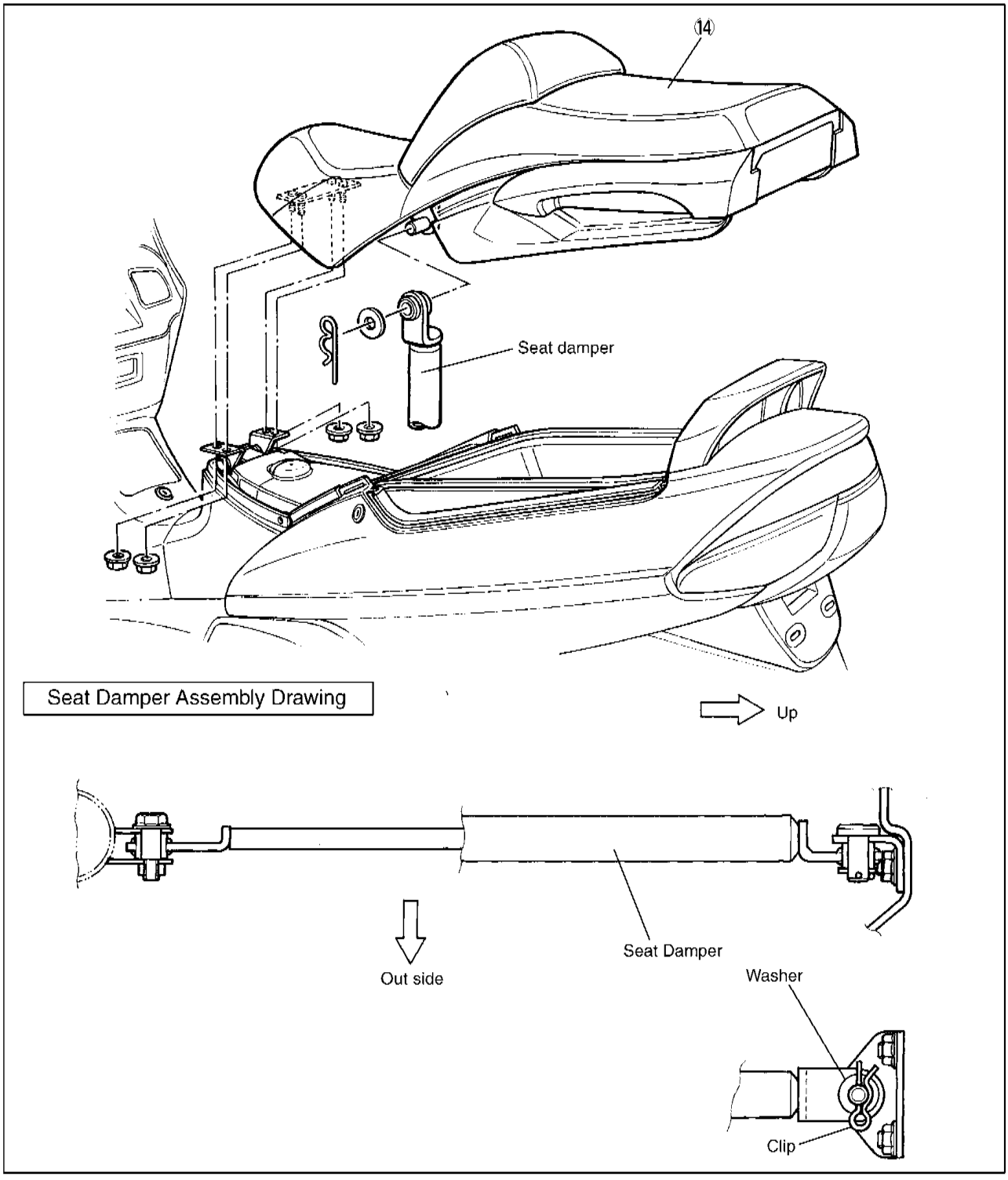

FRONT HELMET BOX COVER

- With the fasteners removed, detach the front helmet box cover ⑮ .

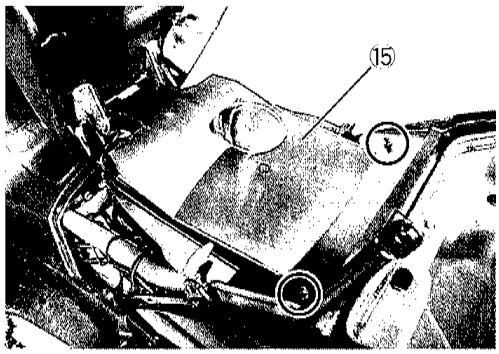

- For installation, follow the procedures below:

1) Place the side of front helmet box cover below the left helmet holder ⓐ.
2) Fit the front end of front helmet box to the frame plate ⓑ.
3) Place the side of front helmet box cover below the right helmet holder ⓒ.
4) With the fasteners aligned with the frame holes, push in the fasteners.

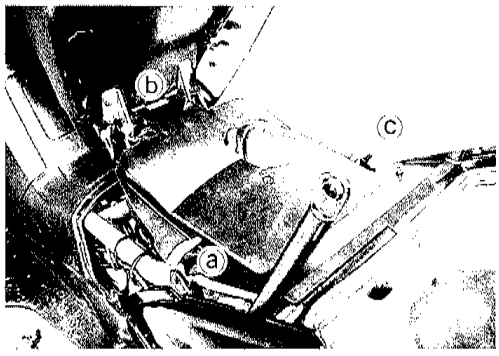

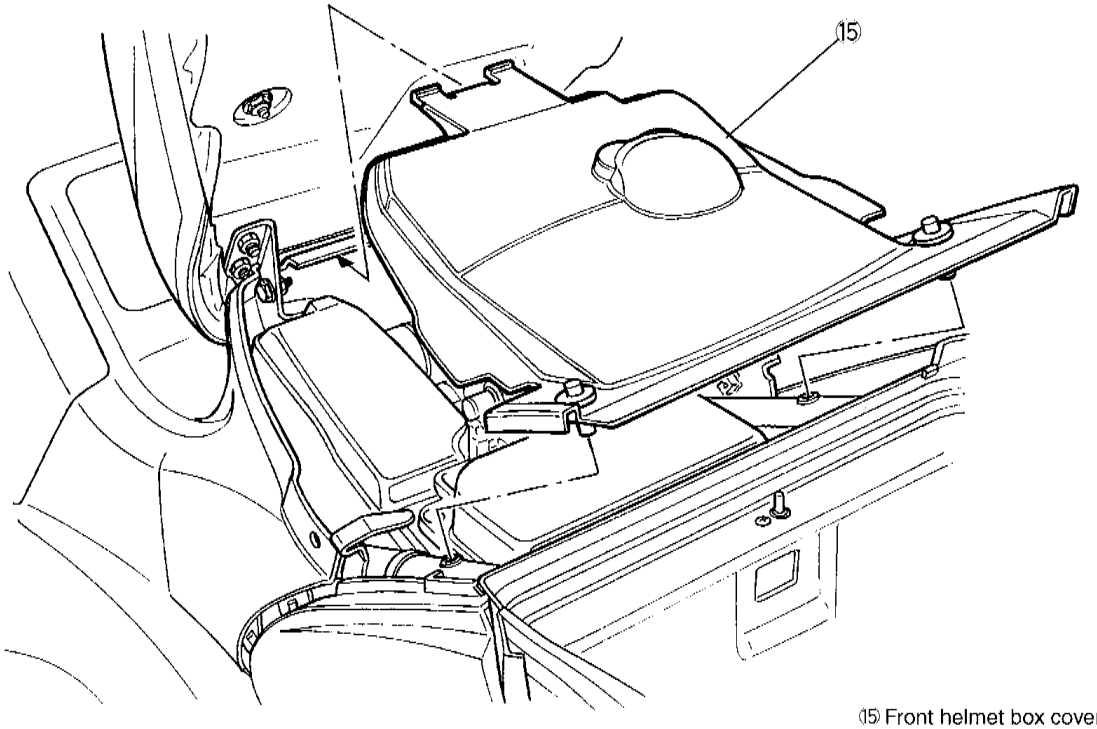

⑮ Front helmet box cover

HELMET BOX

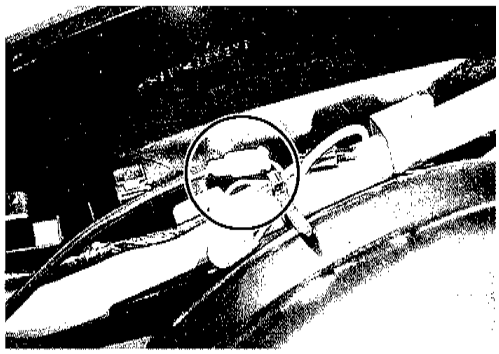

- Remove the front helmet box cover.
- Remove the bolts and fasteners, and pull up the helmet box ⑯.
- Disconnect the helmet box lead wire coupler.

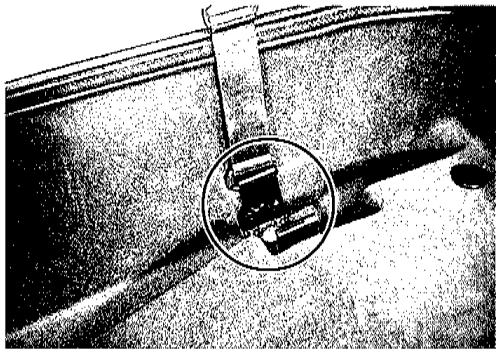

- When installing the helmet box, fit the rubber band hook to the tool bracket and tighten with the bolt.
- Apply thread lock to the bolts before tightening.

1322 99000-32130: THREAD LOCK "1322"

Helmet box bolt: 10 N · m (1.0 kg-m)

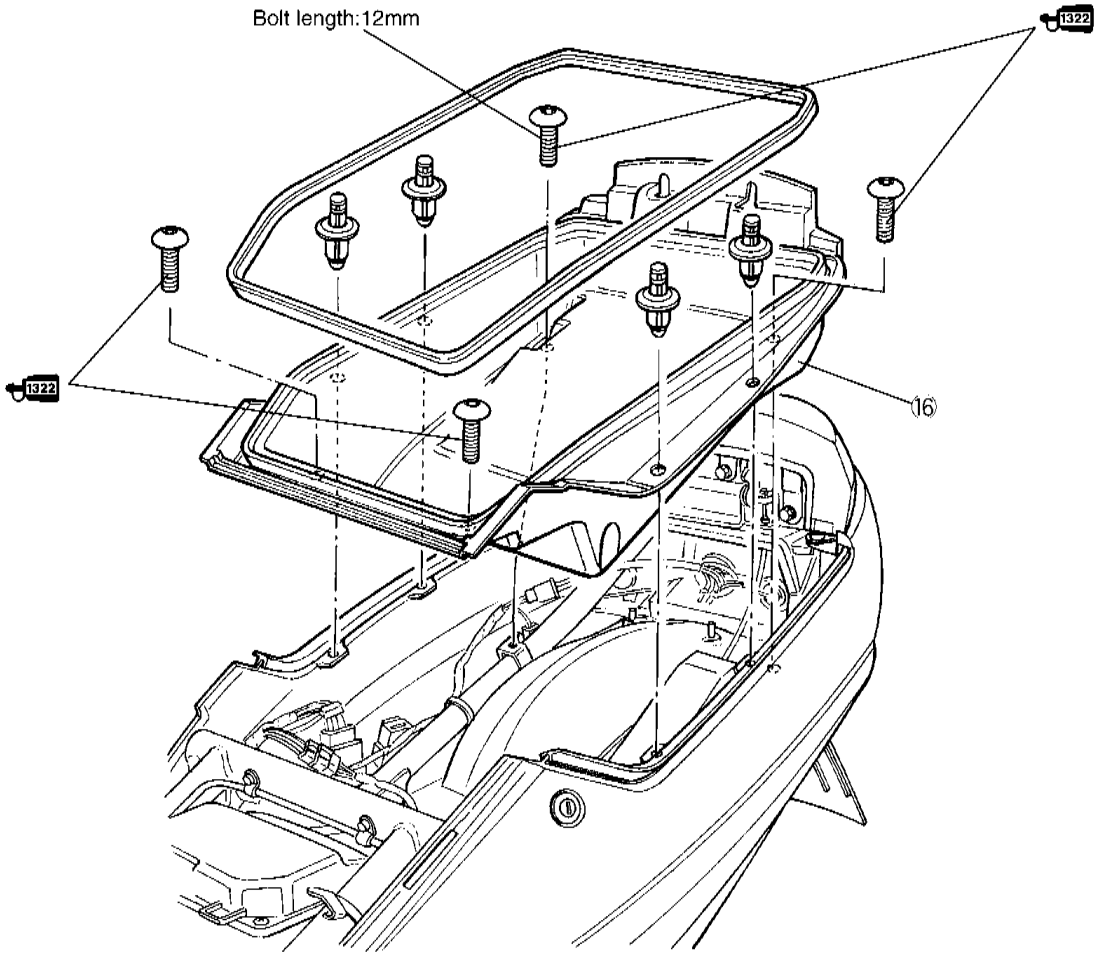

PILLION RIDER HANDLE

- Remove the front helmet box cover and the helmet box.
- Loosen the bolts (3 pcs) and remove the pillion rider handle ⑰.

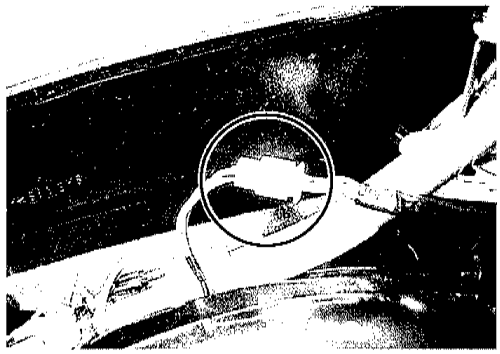

CENTER, LEFT AND RIGHT FRAME COVERS

- Remove the front helmet box cover, helmet box, pillion rider handle and front frame cover.
- Disconnect the rear combination light lead wire coupler.

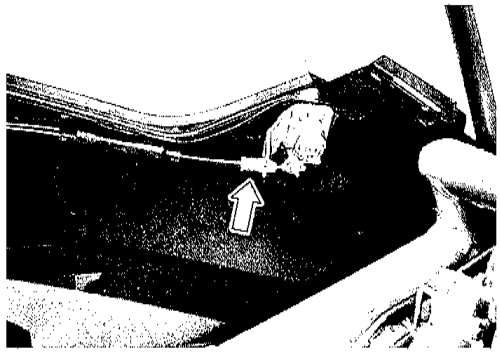

- Disconnect the seat lock cable connection.
- With all the screws removed, remove the center ⑱, left ⑲ and right ⑳ frame covers and the rear combination light all together as an assembly.

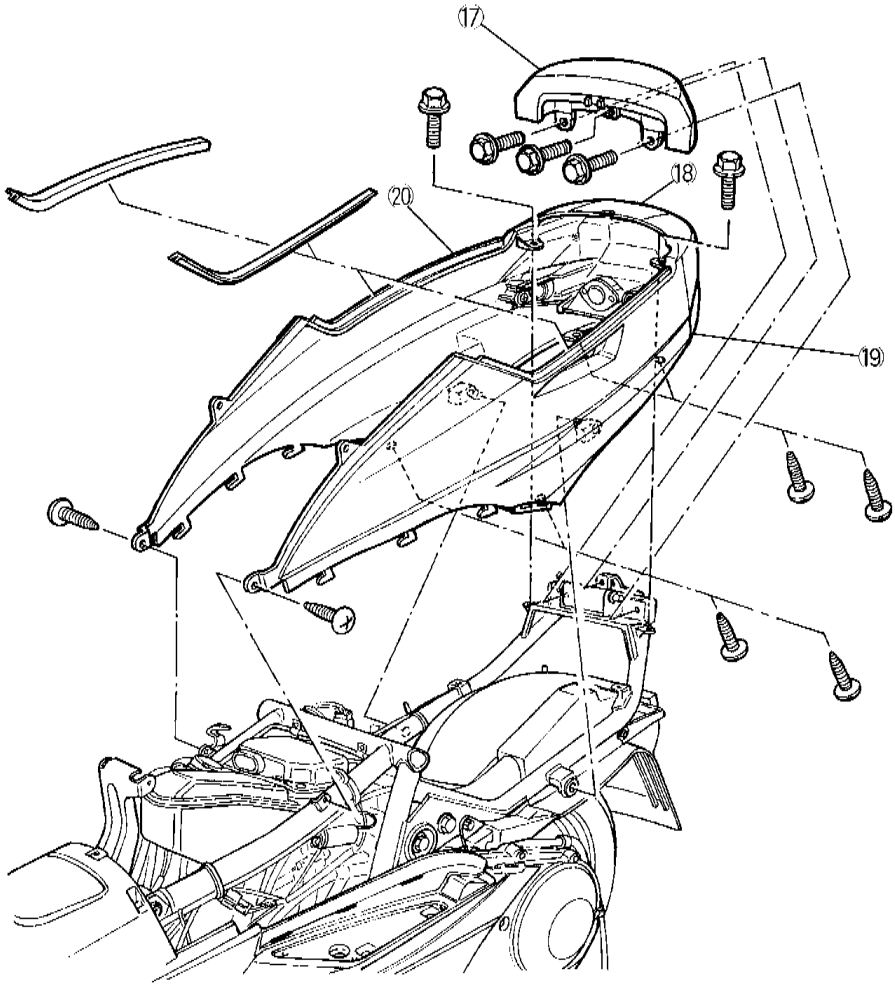

REAR FENDER

- Remove the center, left and right frame covers.
- Remove the rear fender (21).

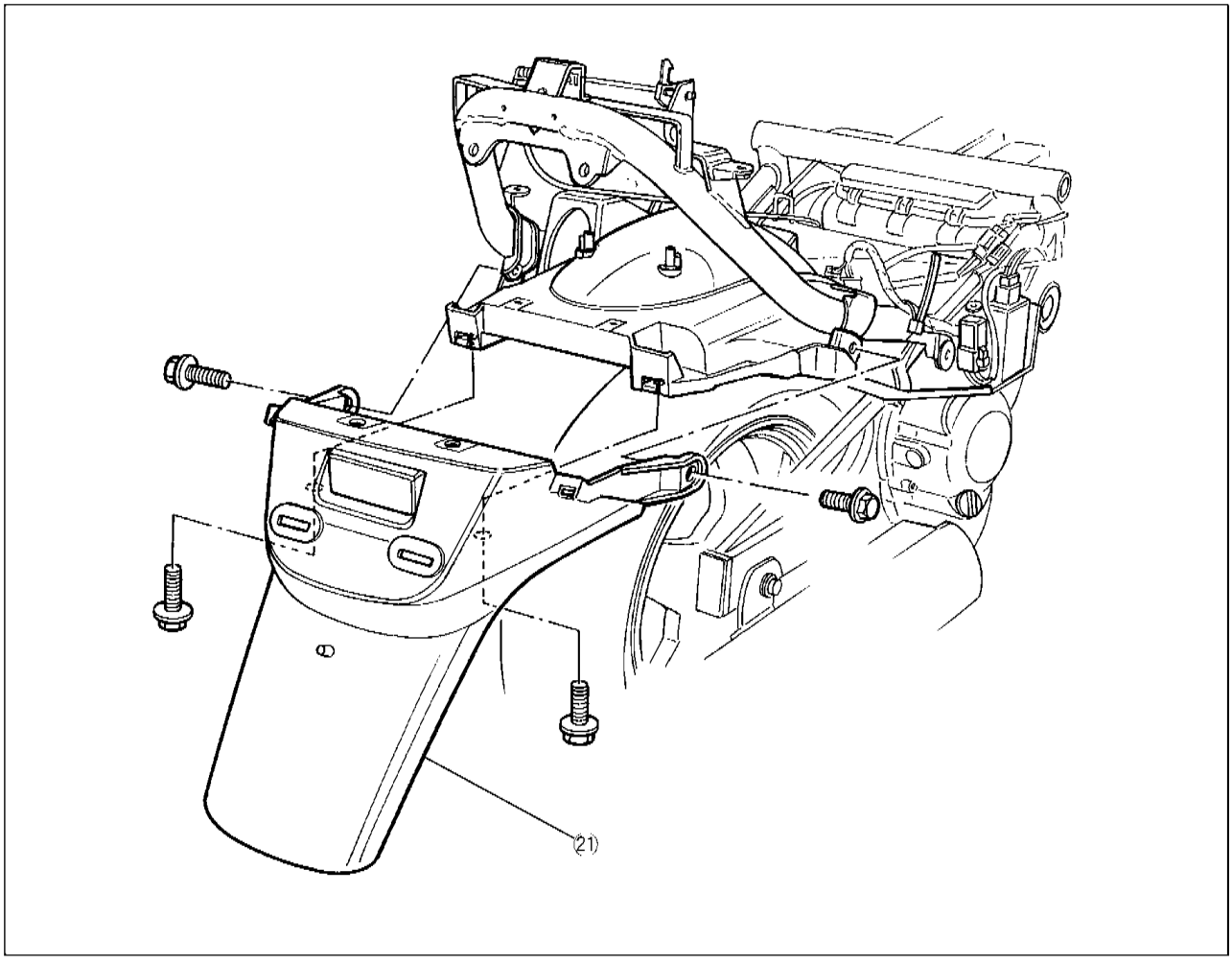

REAR LEG SHIELD

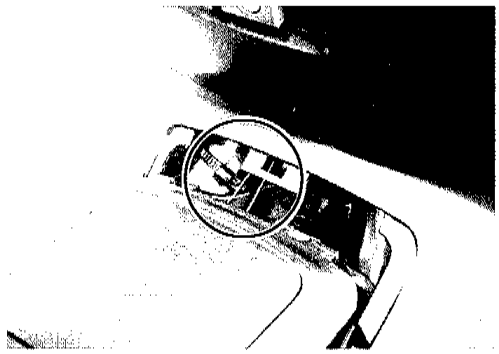

- Remove the left / right side leg shields as well as the front frame cover.
- With all the bolts, screws and fasteners removed, detach the rear leg shield ⑧.
- When reinstalling the rear leg shield, fit the fuel lid spring to the lower part of the front box.
- Use caution not to bend the spring hook.

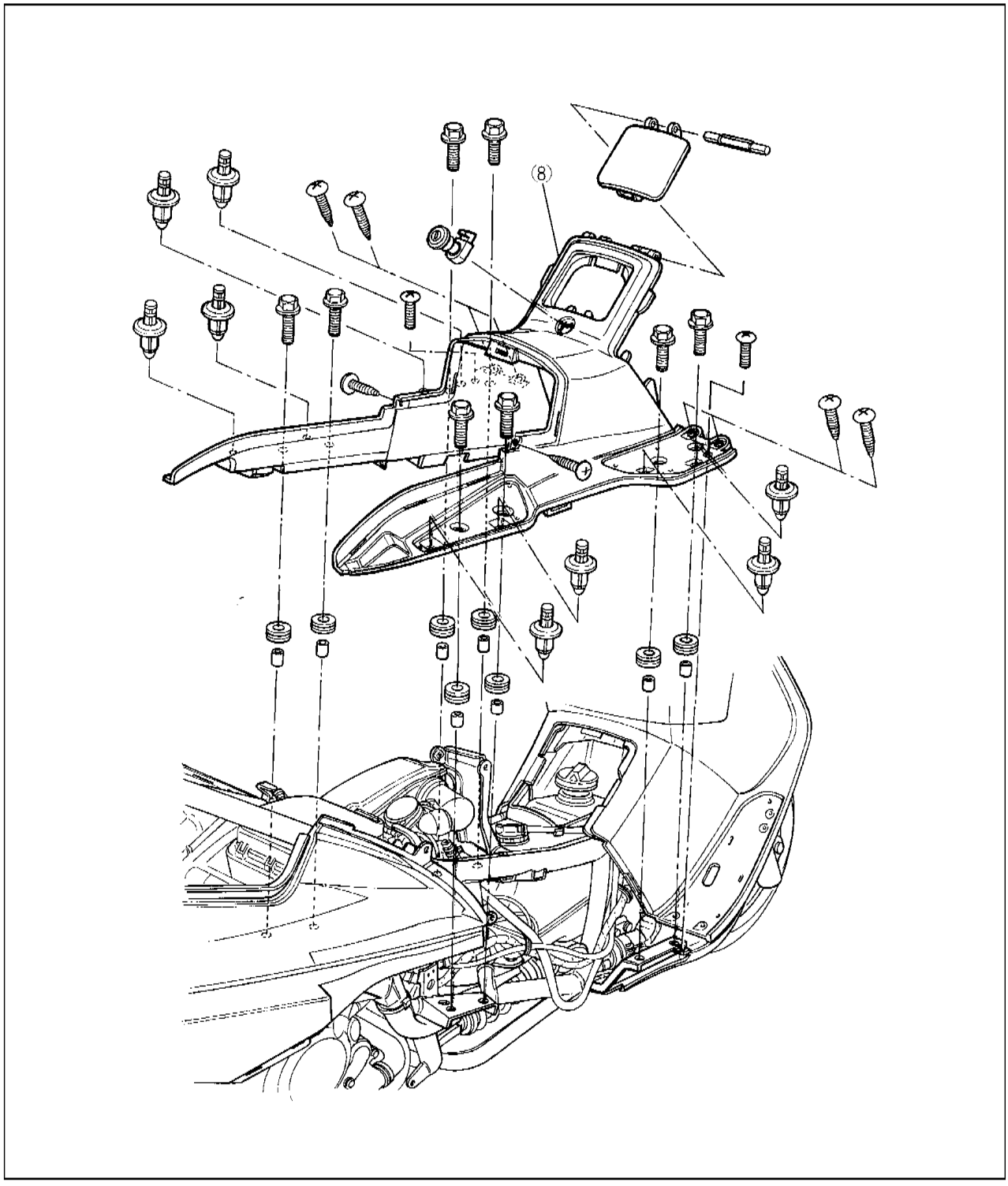

FRONT BOX

Removal of ignition switch shutter:

- Remove the left, right, upper handlebar covers and front leg shield cover.
- Remove the torx bolt (using T-25 torx wrench) through the hole ⓐ.
- Remove the ignition switch shutter ⓑ.

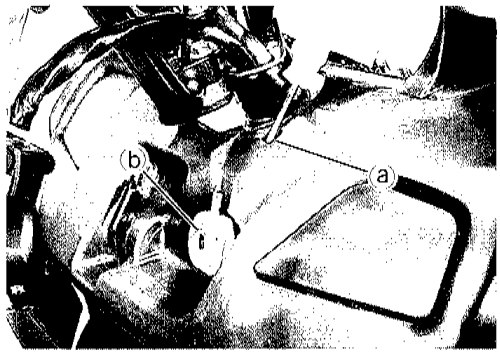

- Remove the front, lower and rear leg shields.
- Take out the battery. (See page 7-30.)
- With the screw and bolt removed, detach the front box ⑦.

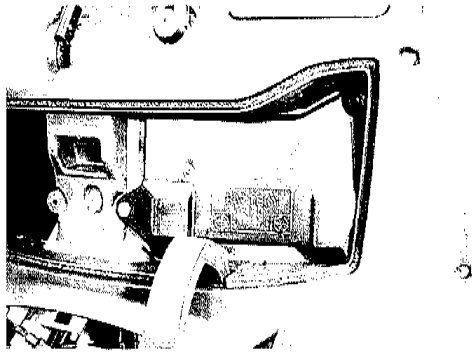

- When installing the front box, pass the battery lead wires through the front box.

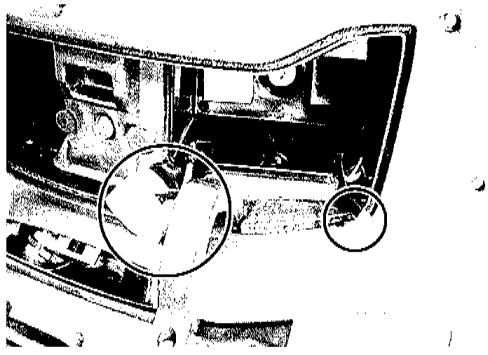

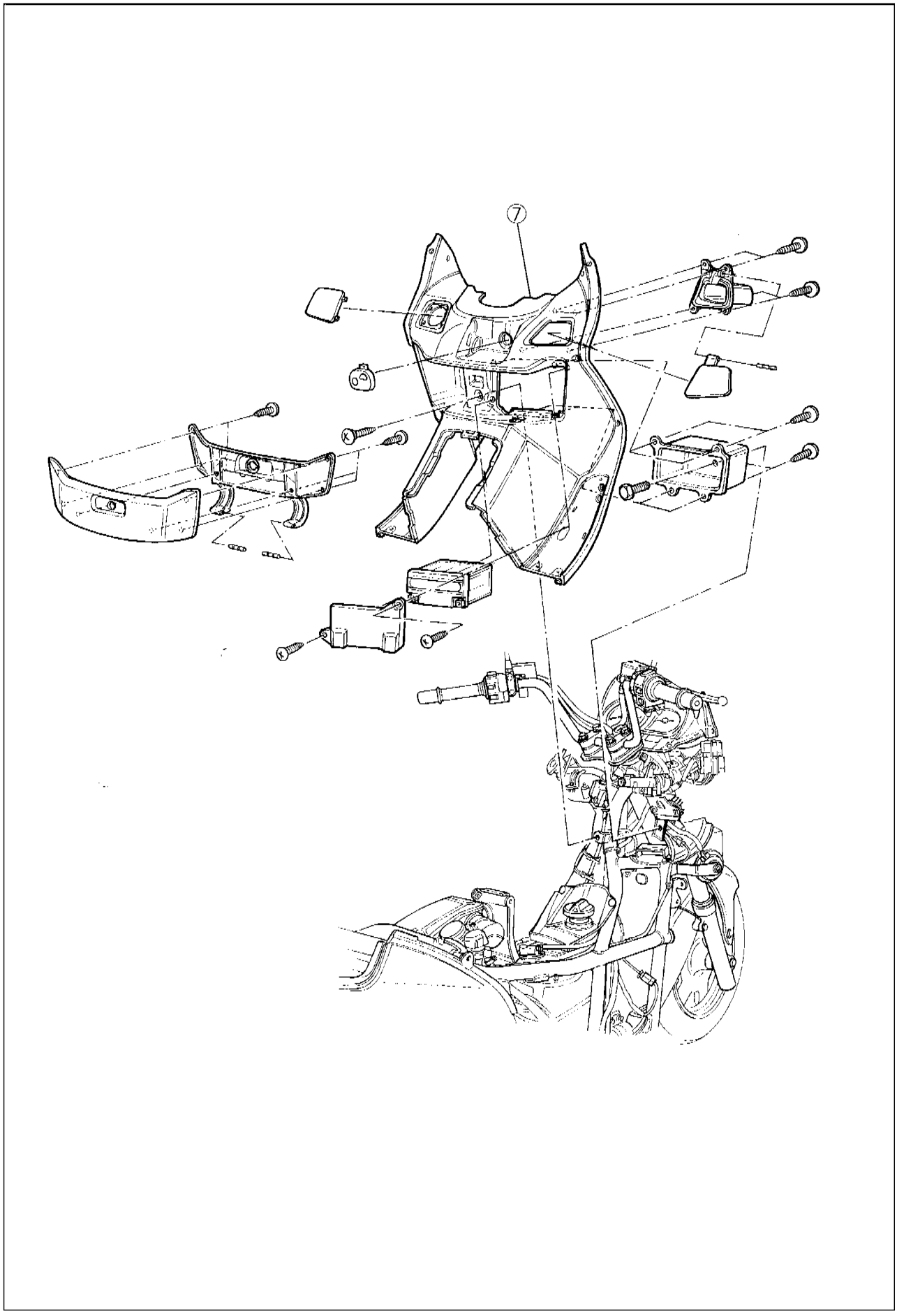
7

FRONT WHEEL

REMOVAL AND DISASSEMBLY

- Loosen the axle pinch bolt ① and then the axle shaft ②.

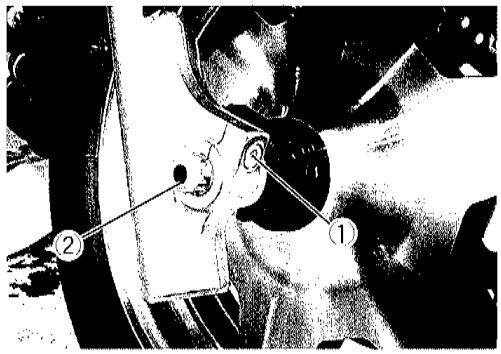

- Lift the front wheel off the ground using a jack.

⚠CAUTION

When using a jack, take care not to cause scratches on the chassis.

NOTE:
In this operation, the clamp bolt ③ should be removed so as not to cause the speed sensor lead wires to be pulled tight.

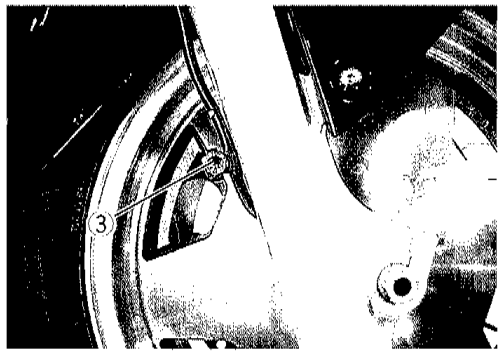

- Draw out the axle shaft and remove the front wheel.
- Remove the dust seal ④.

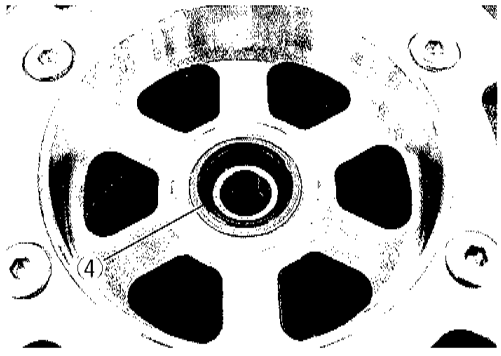

- Remove the brake disc.

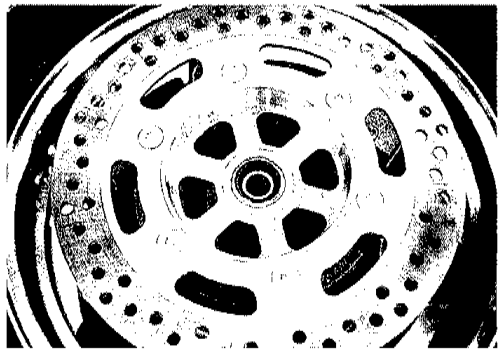

INSPECTION

TIRE

For inspection of the tire, see page 2-15.

FRONT WHEEL

Measure the wheel runout using a dial gauge with the brake caliper detached.
If the runout is found to exceed the service limit, inspect the bearing.

Service Limit
Front wheel runout (Radial and Axial): 2.0 mm

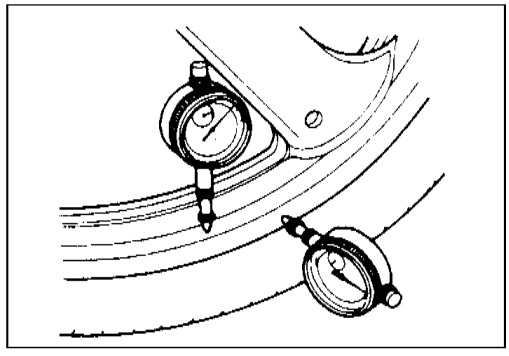

WHEEL BEARING

The wheel bearing inspection must be performed with the bearing installed in the wheel.

Turn the bearing inner race by hand to see if there is no abnormal play or noise. Also check for smoothness of turning.

If any abnormal condition is found, replace the bearing with a new one.

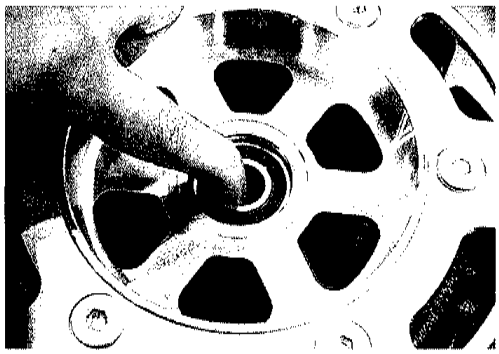

AXLE SHAFT

Using a dial gauge, check the axle shaft for runout.

If the runout measured exceeds the service limit, replace the axle shaft.

Service Limit

Front axle runout: 0.25 mm

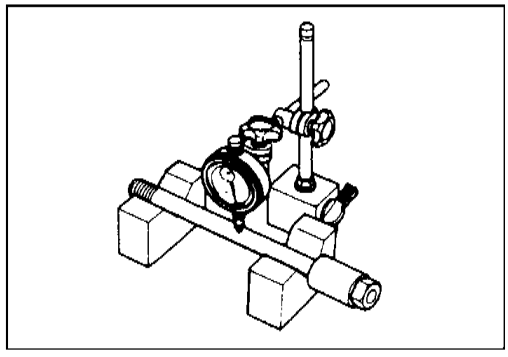

WHEEL BEARING REPLACEMENT

- Insert the bearing remover adapter ① into the wheel bearing.
- From the opposite side, insert the wedge bar ② into the slit of the adapter ①.
- Hit the wedge bar ② using a hammer to remove the bearing.

TOOL 09941-50111: Wheel bearing remover

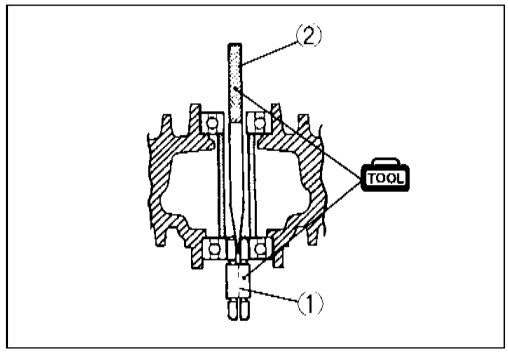

⚠CAUTION

Do not reuse the bearing which has been removed.

REASSEMBLY

To reassemble the front wheel, reverse the sequence of disassembly procedures while observing the following instructions.

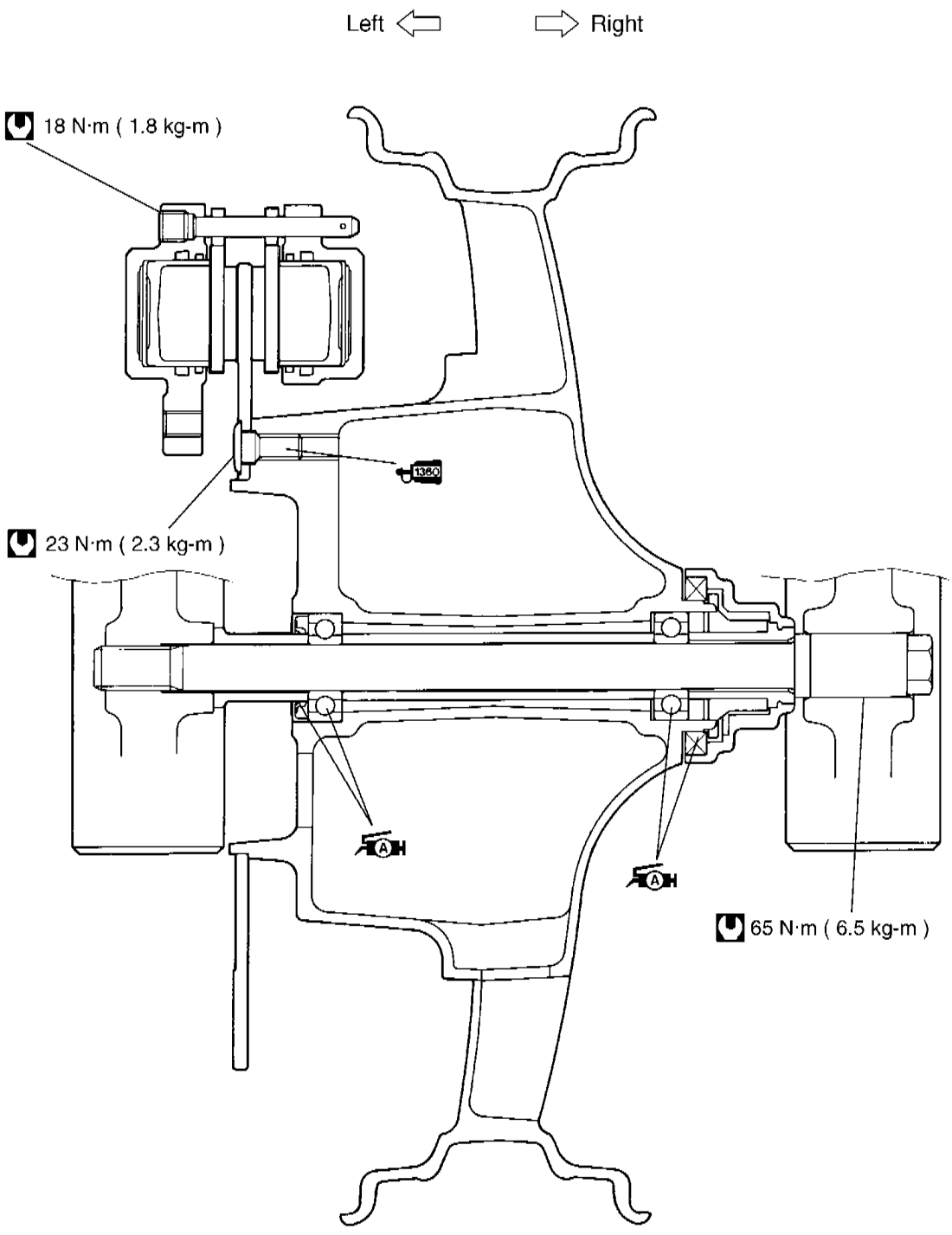

WHEEL BEARING

- Apply grease to the wheel bearings.

09900-25010: SUZUKI SUPER GREZSE "A"

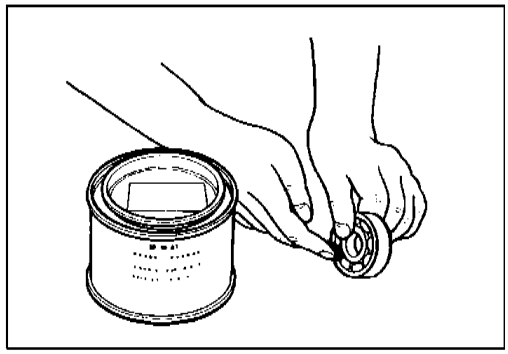

- Using the special tool, press-fit the left bearing.
- Fit the spacer and press-fit the right bearing.

09924-84521: Bearing installer set

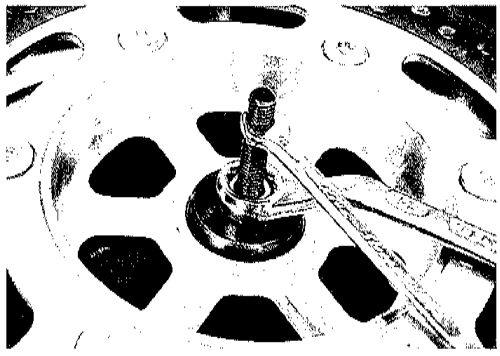

CAUTION

- **Position the sealed side of bearing facing outside.**
- **Use care not to allow the spacer to skew.**

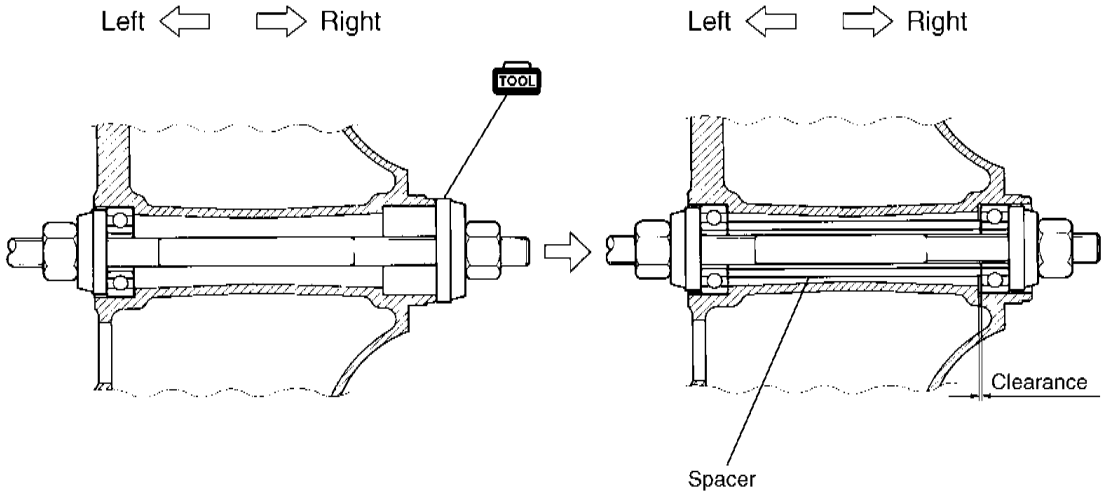

BREAK DISC

- Apply thread lock super to the brake disc bolts and tighten them to the specified torque.

99000-32130: THREAD LOCK SUPER "1360"

Brake disc bolt: 23 N · m (2.3kg-m)

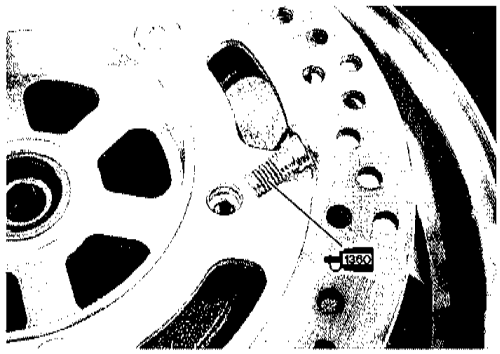

⚠WARNING

Keep the brake disc clean, free from dirt and grease.

DUST SEAL

- Press-fit the dust seal ①.
- Apply grease to the dust seal lip.

99000-25010: SUZUKI SUPER GREASE "A"

SPACER

- Fit the spacer ②.

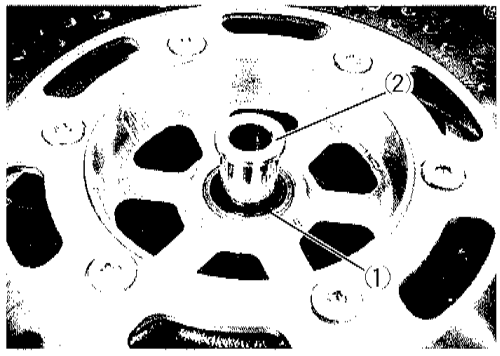

- With the recesses on the wheel engaged with the drive lugs on the speed sensor, position the wheel to the front fork while also aligning the speed sensor with the fork stopper. (See page 8-14.)

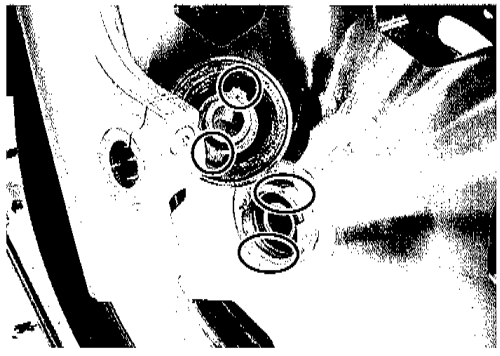

- Tighten the axle shaft ① to the specified torque.

Front axle: 65N · m (6.5kg-m)

- Tighten the axle pinch bolt ②.

Axle pinch bolt: 23N · m (2.3kg-m)

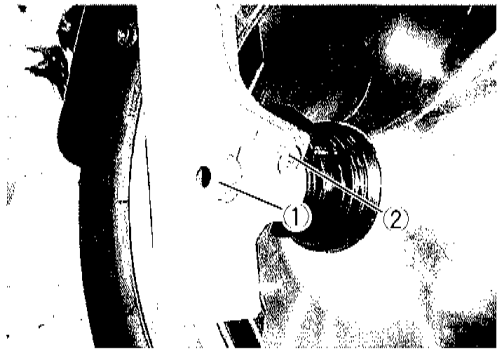

FRONT BRAKE

⚠WARNING

- **Do not mix with brake fluid of different brand.**
- **Do not use a brake fluid kept in a open container or stored for long period of time.**
- **To store brake fluid, make sure to seal the container and keep it in a safe place to be out of reach of children.**
- **When filling brake fluid, take care not to allow water or dirt to enter the system.**
- **To wash the brake system parts, use brake fluid and not any other material.**
- **Do not allow dirt and fluids to contact the brake disc or pad.**

⚠CAUTION

Do not allow brake fluid to contact the paint surface, plastic or rubber parts, or its chemical reaction can cause discoloration or crack.

BRAKE FLUID REPLACEMENT

- For replacing procedure of brake fluid, refer to page 2-12.

BRAKE PAD REPLACEMENT

- For replacing procedure of brake pad, refer to page 2-11.

CALIPER REMOVAL AND DISASSEMBLY

- Drain brake fluid of both the front brake side and the combination brake side. (See page 2-12.)

⚠CAUTION

To prevent brake fluid from splashing on the parts nearby, cover the parts with cloth.

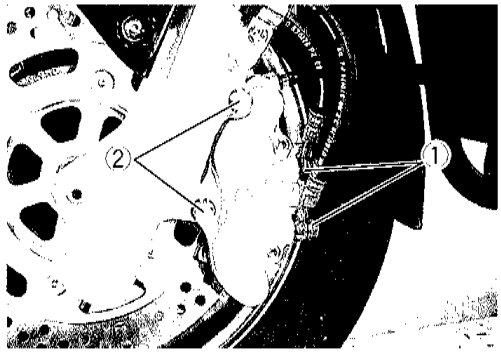

- Remove the union bolts ① and caliper mounting bolts ②.

NOTE:

Slightly loosen the caliper housing bolts ③ before removing the caliper mounting bolts ② to facilitate later disassembly.

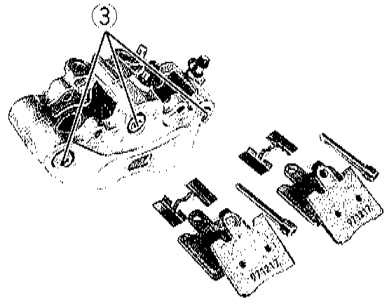

- Remove the brake pad. (See page 2-11.)
- Remove the caliper housing bolts ③.

- Using an air blow gun, pressurize the caliper fluid chamber to push out the piston.

⚠WARNING

- **Place a rag over the piston to prevent it from popping out and flying and keep hand off the piston.**
- **Be careful of brake fluid which can possibly splash.**
- **Do not use high pressure air but increase the pressure gradually.**

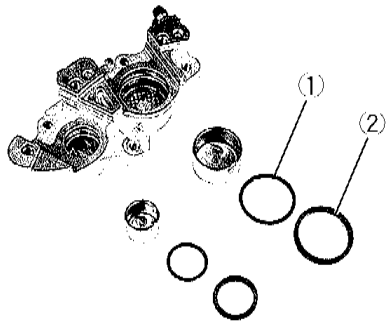

- Remove the dust seals ① and piston seals ②.

⚠CAUTION

- **Use care not to cause scratch on the cylinder bore.**
- **Do not reuse the piston seal and dust seal that have been removed.**

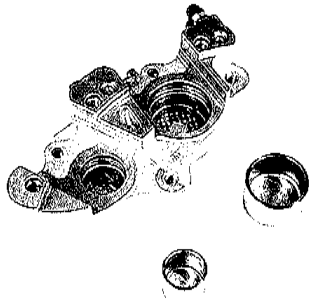

CALIPER INSPECTION

Inspect the caliper cylinder wall and piston surface for scratch, corrosion or other damages.
If any abnormal condition is noted, replace the caliper.

CALIPER REASSEMBLY

Reassemble the caliper in the reverse order of disassembly procedures and observe the following points.

⚠CAUTION

- **Wash the caliper components with fresh brake fluid before reassembly. Do not wipe off brake fluid after washing the components.**
- **Replace the piston seal and dust seal with new ones with brake fluid applied.**

Brake fluid specification and classification: DOT4

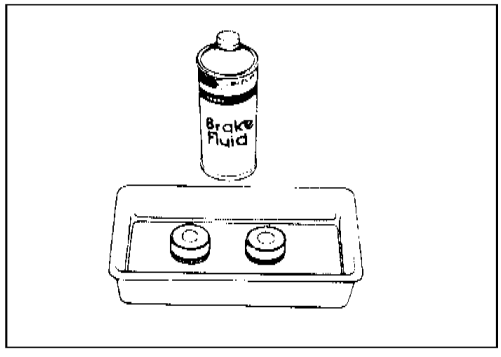

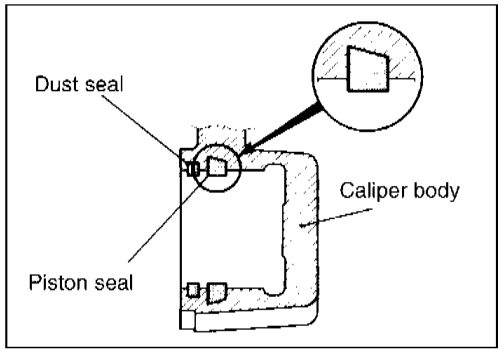

- Fit the O-rings ①.

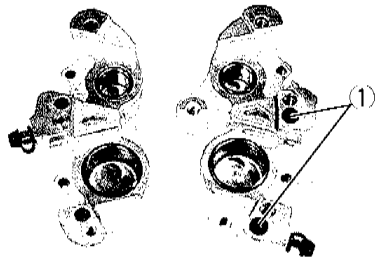

- With thread lock super applied to the threads, tighten the caliper housing bolts ②.

Caliper housing bolt: 23N · m (2.3kg-m)

1360 99000-32130: THREAD LOCK SUPER "1360"

- Install the brake pads.

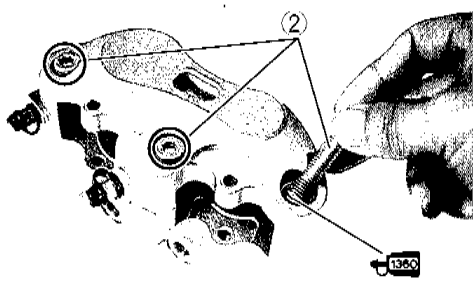

- Tighten the caliper mounting bolts ①.
- With the hose ends contacted to the stoppers, tighten the union bolts ②.

① Caliper mounting bolt: 25N · m (2.5kg-m)
② Union bolt: 23N · m (2.3kg-m)

- For assembly procedure of brake hose, refer to page 9-13.

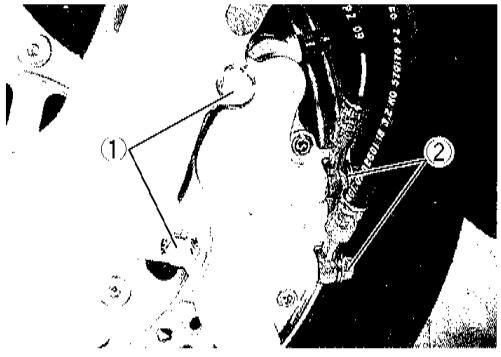

- Fill the system with brake fluid and bleed air. (See page 2-12.)

INSPECTION AFTER REASSEMBLY

Brake (See page 2-10.)

BRAKE DISC INSPECTION

Check the brake disc surface for scratch, crack or abnormal wear.

Measure the disc thickness at several positions using a micrometer.

If the measurement is less than the service limit or any abnormal condition is noted, replace the disc with a new one.

(For replacement procedure, see page 7-20 and 46.)

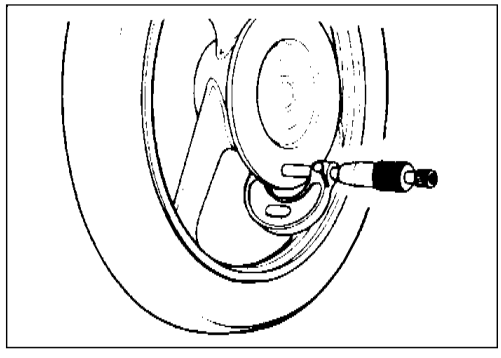

Service Limit

Brake disc thickness: Front 4.0 mm
Rear 4.5 mm

MASTER CYLINDER REMOVAL AND DISASSEMBLY

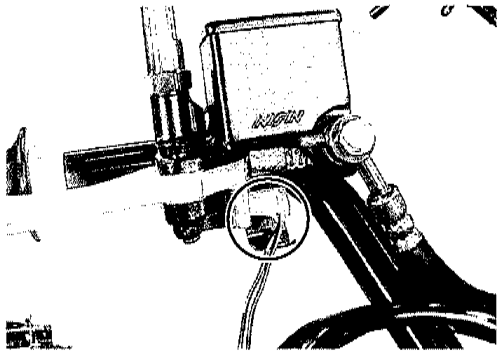

- Remove the right and upper handlebar covers. (See page 6-1.)
- Drain brake fluid from the front brake side reservoir. (See page 2-12.)
- Disconnect the brake light switch lead wires.

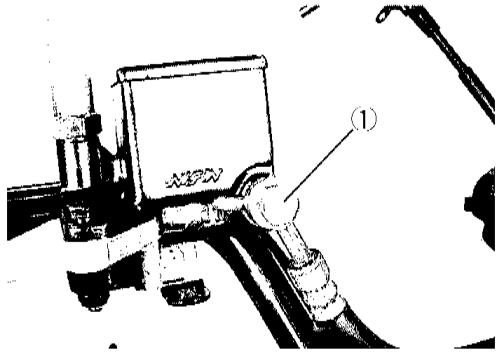

- Remove the union bolt ①.

⚠CAUTION

Place a rag under the union bolt so that brake fluid may not contact the parts.

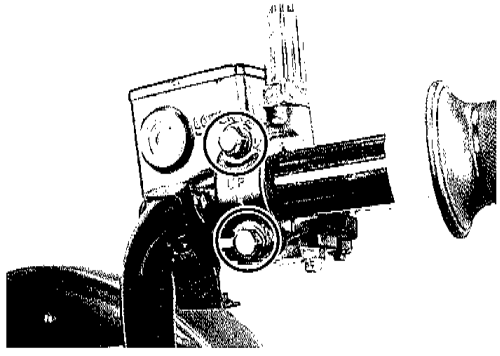

- Remove the master cylinder.

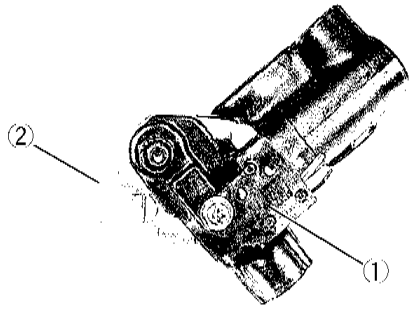

- Remove the brake light switch ① and brake lever ②.

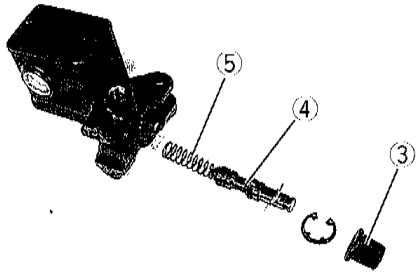

- Detach the dust seal boot ③ and remove the circlip.
- Pull out the piston / cup set ④ and spring ⑤.

MASTER CYLINDER INSPECTION AND REASSEMBLY

Check the cylinder inside wall, piston / cup set and spring for scratch, corrosion or other abnormal condition.
If any abnormal condition is found, replace the inner parts or master cylinder.

Reassemble the master cylinder in the reverse order of disassembly procedures while observing the following points.

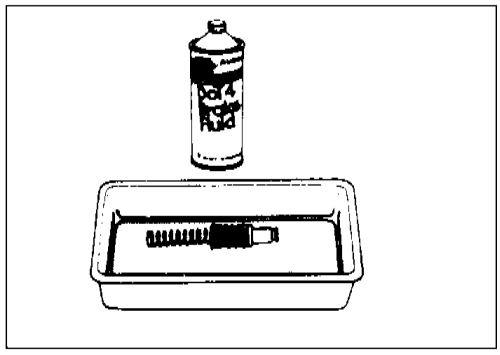

⚠CAUTION

- **Wash each component with fresh brake fluid before reassembly. Do not wipe off brake fluid after washing the components.**
- **Replace the cup set (piston, primary cup, secondary cup and spring) with a new one with brake fluid applied.**

- For assembly of the piston / cup set, refer to the right illustration.

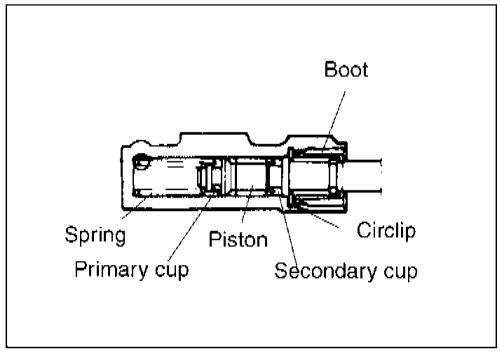

- For the master cylinder assembly procedure, refer to page 6-30.
- Tighten the upper bolt first temporarily to provide clearance on the lower side and then tighten both the bolts to the specification.

Master cylinder bolt: 10N · m (1.0kg-m)

- Fit the brake hose (See page 8-12.) and tighten the union bolt.

Union bolt: 23N · m (2.3kg-m)

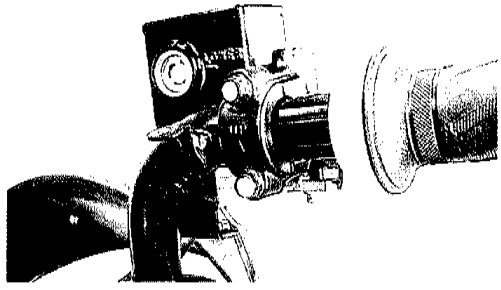

- Fill the system with brake fluid and bleed air. (See page 2-13.)

INSPECTION AFTER REASSEMBLY

Front brake (See page 2-10.)

HANDLEBARS

- Remove all the handlebar covers. (See page 6-1.)

HANDLEBAR LEFT SIDE PARTS REMOVAL

- Remove the left handlebar switches ①.
- Disconnect the brake light switch lead wires and remove the master cylinder. (See page 6-49.)
- Remove the handlebar balancer ② and grip ③.

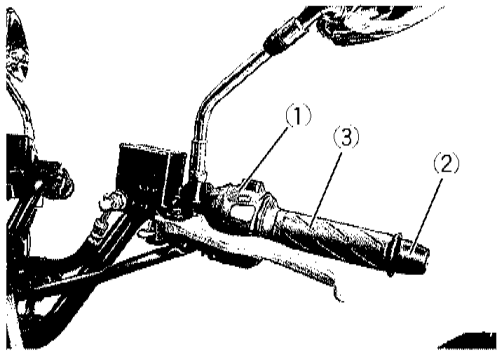

HANDLEBAR RIGHT SIDE PARTS REMOVAL

- Disconnect the brake light switch lead wires and remove the master cylinder. (See page 6-27.)
- Remove the handlebar balancer ① and grip ②.

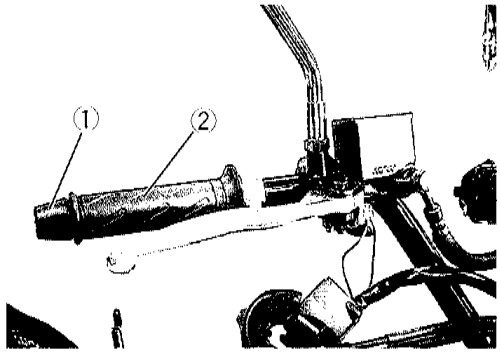

- Remove the clamp bolts ① and cable guide bolts ②, and detach the handlebar holders ③.
- Remove the handlebars.

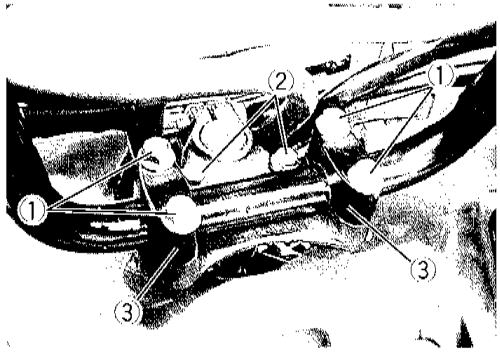

REASSEMBLY

Perform the reassembly work in the reverse order of the disassembly procedures while observing the following instructions.

- Tighten the handlebar clamp bolts ① and cable guide bolts ②, left and right sides.

Handlebar clamp bolt: 23N · m (2.3kg-m)

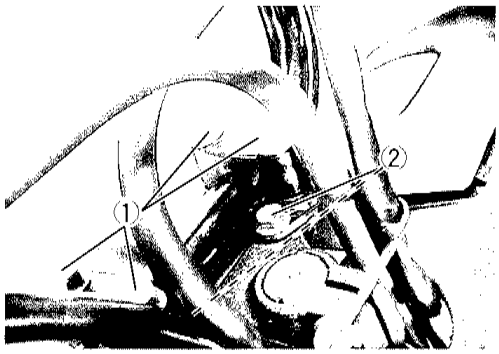

⚠CAUTION

Apply thread lock to the handlebar clamp bolts.

99000-32130: THREAD LOCK "1322"

- With the stopper ② engaged with the handlebar hole, assemble the handlebar switch.

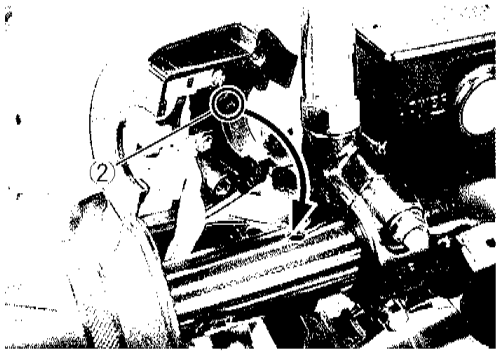

- Align the mating face of both the brake holders with the respective punch marks ③ and tighten them with the bolts.

Master cylinder bolt: 10N · m (1.0kg-m)

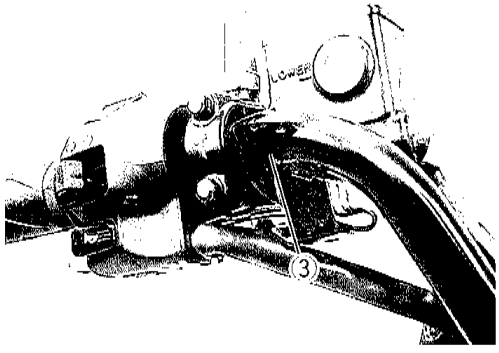

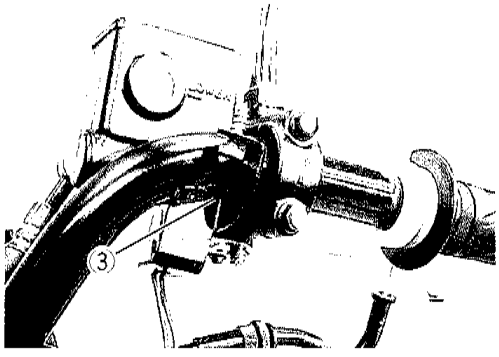

After the handlebars have been assembled, inspect the following:

* Brake (See page 2-10.)
* Throttle operation and cable play (See page 2-6.)

FRONT FORK

REMOVAL AND DISASSEMBLY

- Dismount the front wheel. (See page 6-19.)
- Remove the speed sensor wire clamp.
- Remove the brake caliper and brake hose clamp.

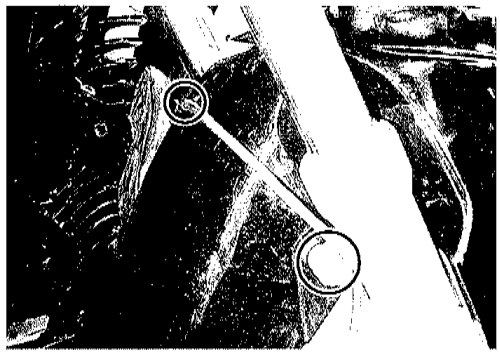

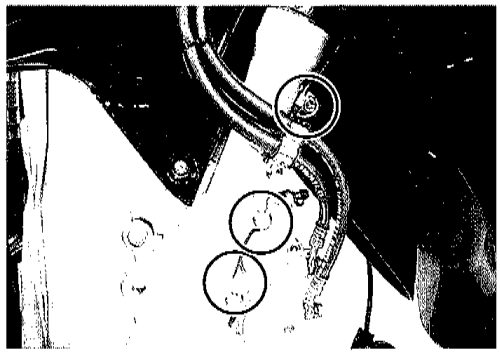

- Remove the front fender.

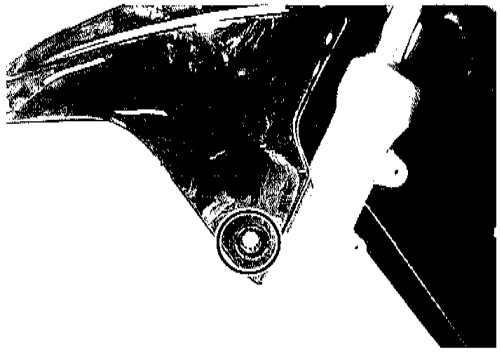

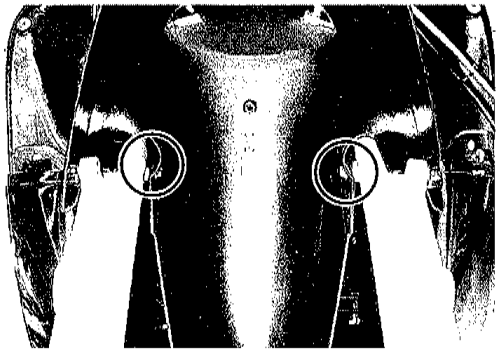

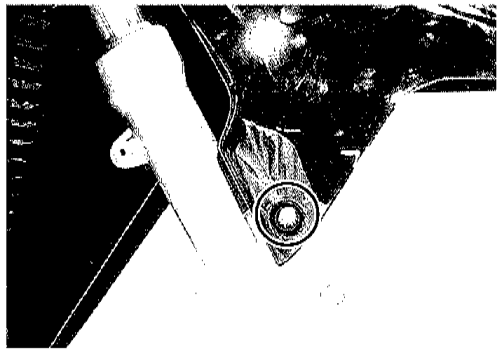

NOTE:
When removing the right side front fork, remove the upper front fender tightening bolts ① and slide the upper front fender.

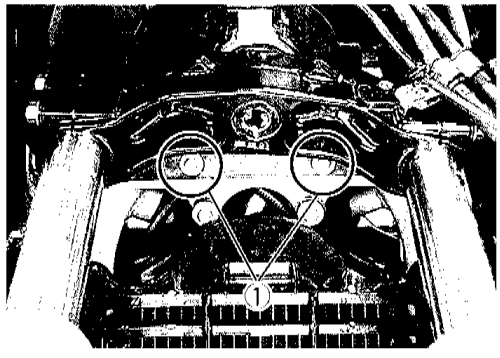

- Using the special tool, remove the front fork cap bolt.

TOOL 09940-30230: Hexagon socket (17mm)

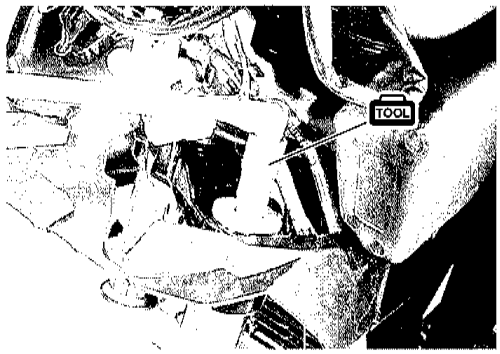

⚠CAUTION

Use caution when removing the front fork cap bolt since the spring force is applied to the cap bolt .

- Loosen the front fork clamp bolts and remove the front forks, left and right.

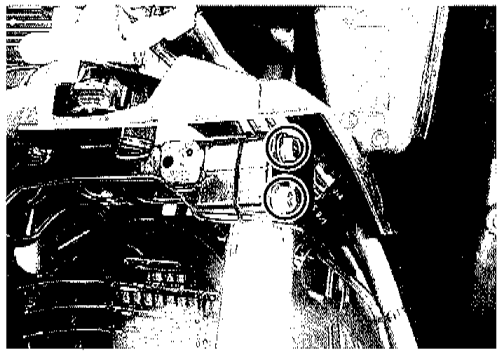

- Draw out the spacer ① ,retainer ② and front fork spring ③ .
- Drain front fork oil.

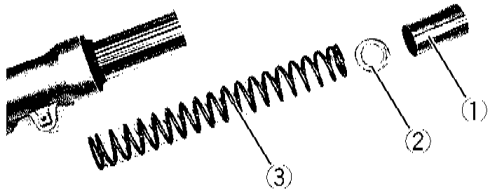

- Remove the damper rod bolt ④ .

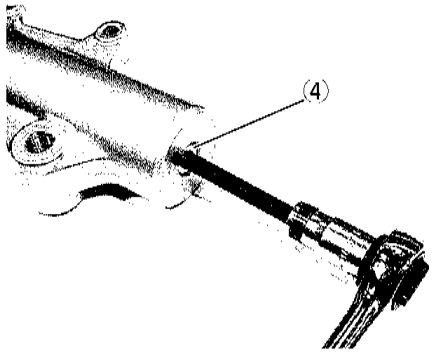

- Remove the damper rod ⑤ and the spring ⑥ .

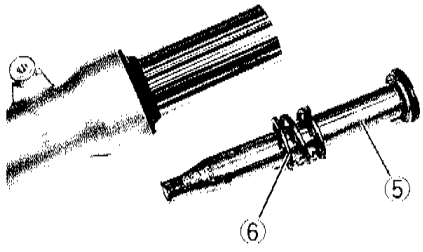

- Remove the dust seal ① and oil seal stopper ring ②.

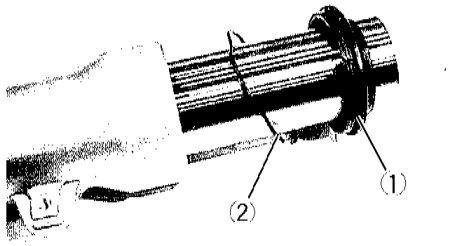

- Pull out the inner tube from the outer tube.

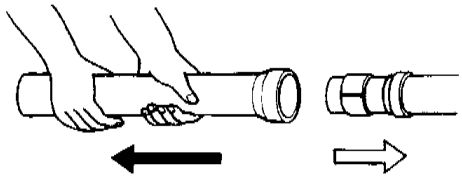

- Remove the oil lock piece ③.
- From the inner tube, slide out the oil seal ④, oil seal retainer ⑤, outer tube slide metal ⑥, and inner tube slide metal ⑦.

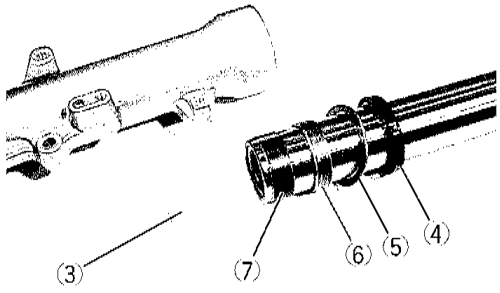

INSPECTION

FRONT FORK SPRING

Measure the free length of the front fork spring.
If the length is found shorter than the service limit, replace the spring.

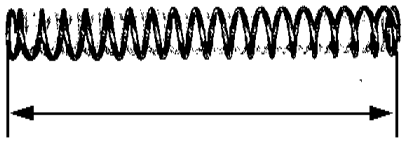

Service Limit
Front fork spring free length: 251 mm

INNER TUBE AND OUTER TUBE

Check the sliding surface of the inner tube, outer tube and damper rod ring for scratch, wear, bending, or other abnormal condition.

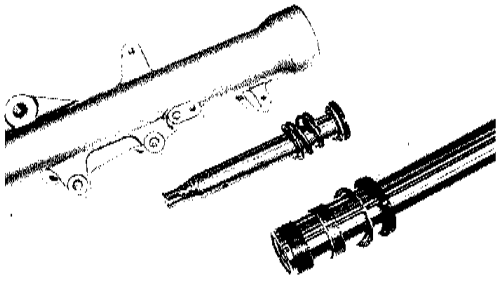

REASSEMBLY

Perform the reassembly work in the reverse order of the disassembly procedures while observing the following instructions.

⚠CAUTION

- **Thoroughly wash all the component parts being assembled. Insufficient washing can result in oil leakage or premature wear of the parts.**
- **When reassembling the front fork,use new fork oil.**
- **Use the specified fork oil for the front fork.**
- **When reassembling ,replace the slide metals,oil seal,dust seal and damper rod bolt gasket with new ones.**
- **Use care not to cause damage to the slide metal surfaces since the surfaces are TEFLON coated.**

- On the inner tube,assemble the following parts.
  ① Dust seal
  ② Oil seal stopper ring
  ③ Oil seal
  ④ Oil seal retainer
  ⑤ Slide metal
  ⑥ Slide metal

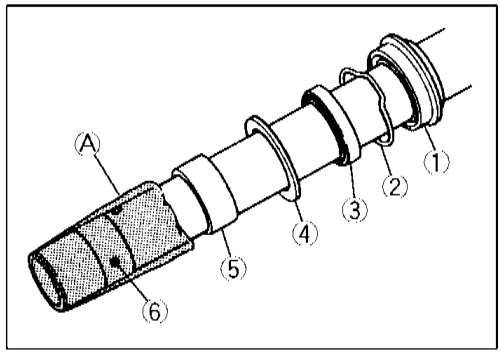

⚠CAUTION

To prevent the lip of oil seal ③ from being damaged, cover the inner tube with vinyl sheet Ⓐ during installation.

- Assemble the spring to the oil lock piece.

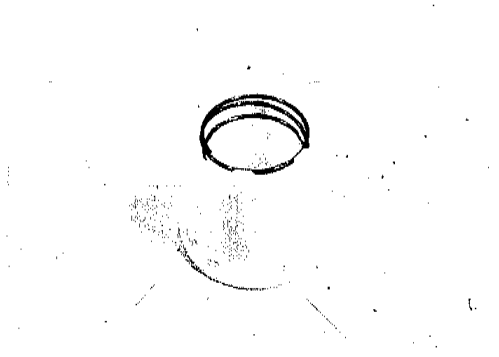

- With the oil lock piece ⑦ fitted to the inner tube , assemble the inner tube to the outer tube.

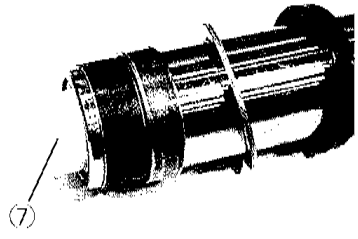

- Apply grease to the lip of the oil seal ③ and install it into the outer tube using the front fork oil seal installer.

99000-25010: SUZUKI SUPER GREASE "A"

09940-52861: Front fork oil seal installer set

⚠CAUTION

Wash clean the front fork oil seal installer before using. If dirt is on the installer, the inner tube may possibly be damaged during press-fitting work.

- Fit the stopper ring ② and dust seal ①.

⚠CAUTION

Make sure that the stopper ring is securely fitted into the groove on the outer tube.

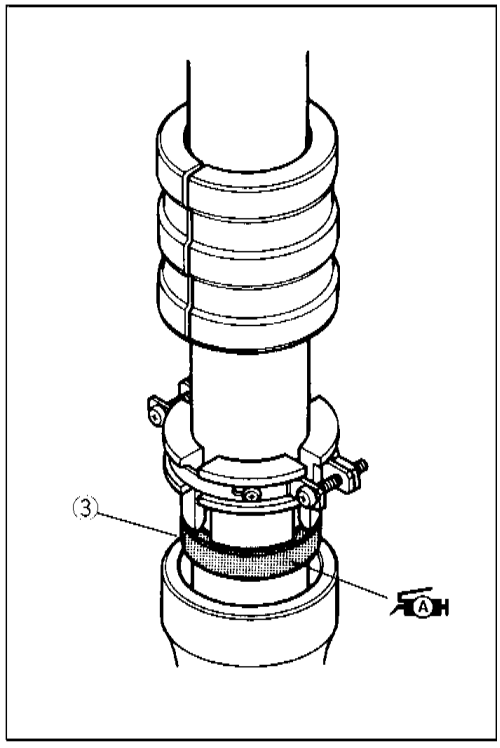

① Dust seal
② Oil seal stopper ring
③ Oil seal
④ Oil seal retainer
⑤ Slide metal

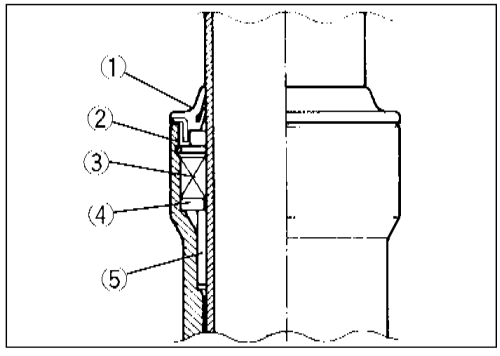

- Fit the rebound spring ⑥ on the damper rod ⑦ and install them together to the inner tube.

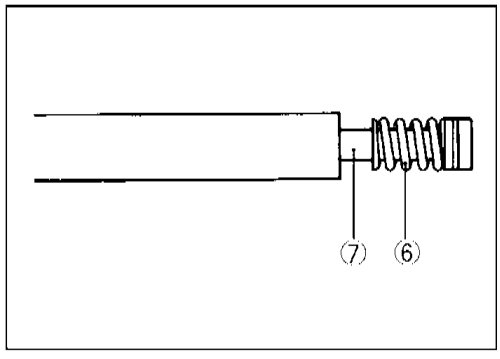

- With the gasket ⑧ fitted, tighten the damper rod bolt ⑨.

Front fork end bolt: 30N · m (3.0kg-m)

⚠CAUTION

Replace the gasket with a new one.

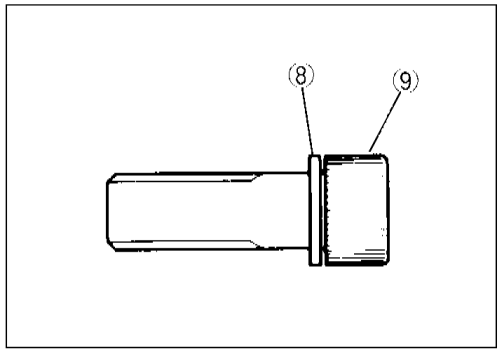

FRONT FORK OIL

- With the inner tube in fully compressed position, pour the specified amount of fork oil and stroke the tube several times to expel air.

Fork oil type: #10

99000-99044-10G: FORK OIL #10

Capacity (each leg): 292ml

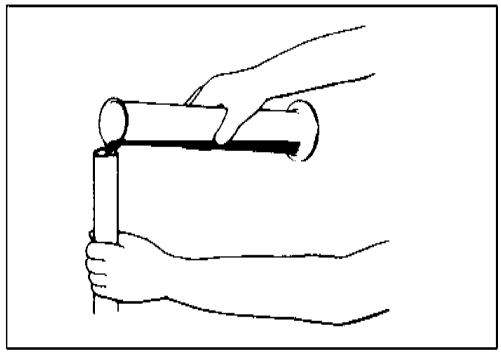

- With the front fork held in vertical position, compress the inner tube all the way.
- Wait until the fluid level stabilizes, measure and adjust the level to specification using the special tool.

Oil level (without spring): 98 mm

09943-74111: Front fork oil level gauge

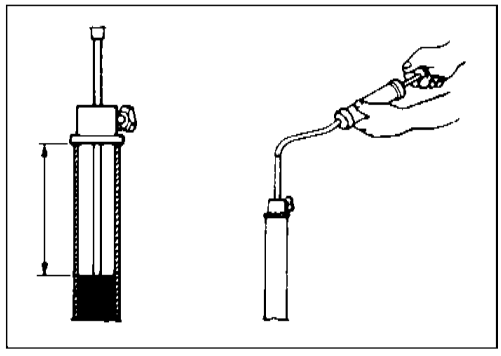

- Assemble the front fork spring ①.
- Assemble the washer ② and spacer ③.

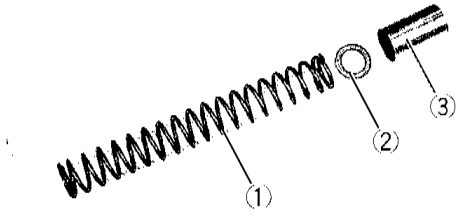

- Fit the O-ring to the front fork cap bolt and apply grease.

99000-25010: SUZUKI SUPER GREASE "A"

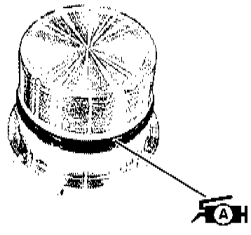

- Insert the front fork inner tube top end into the steering stem all the way until the step of mounting hole has been contacted.
- Tighten the clamp bolts temporarily.

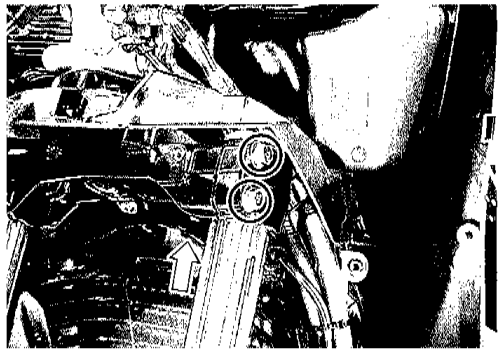

- Temporarily tighten the front fork cap bolt.
- Tighten the front fork clamp bolts ① to the specified torque.

Front fork clamp bolt: 23N · m (2.3kg-m)

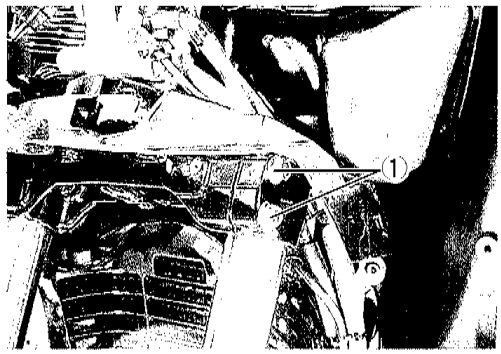

- Tighten the front fork cap bolt ② to the specified torque.

09940-30230: Hexagon socket (17mm)

Front fork cap bolt: 45N · m (4.5kg-m)

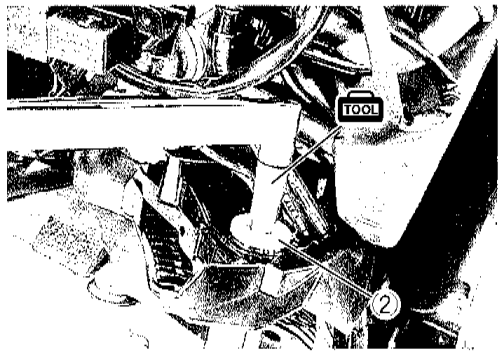

INSPECTION AFTER REASSEMBLY

Speedometer lead wires and brake hoses routing (See pages 8-12 and -14.)

STEERING

REMOVAL AND DISASSEMBLY

- Remove all the handlebar covers. (See page 6-1.)
- Remove the front box. (See page 6-1.)
- Remove the front wheel. (See page 6-19.)
- Remove the front fender. (See page 6-31.)
- Remove the front fork. (See page 6-31.)

NOTE:

The front fork removal is not necessary unless the steering stem replacement or front fork disassembly work is required.

- Remove the cable guide.
- Remove the handlebar holder clamp bolts ②.

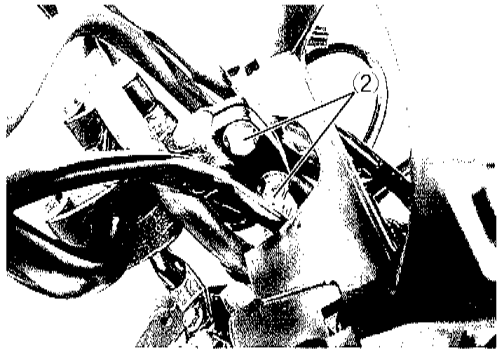

- Remove the handlebar holder set bolt ③.
- Remove the handlebar holder with handlebars.

⚠CAUTION

This operation must be performed without causing undue stress to the brake hose and wire.

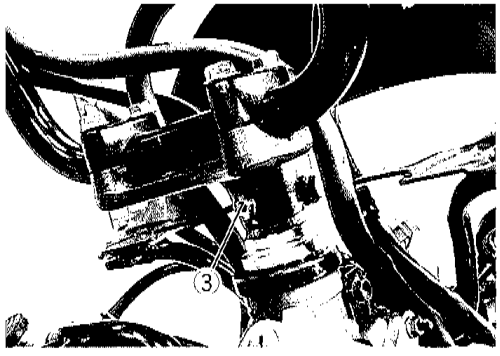

- Remove the lock nut ④, washer ⑤ and steering stem nut ⑥ and draw out the steering stem.

TOOL **09940-14911: Steering socket wrench**
09940-11420: Steering stem nut socket
09940-11430: Steering stem nut socket

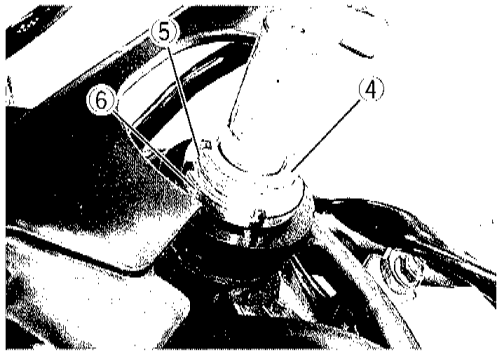

- Remove the dust cover⑦, upper inner race⑧and upper bearing ⑨.

- Remove the lower bearing.

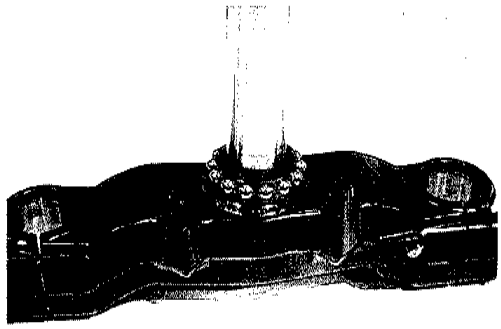

- To remove the lower inner race, use a chisel like, plain head steel rod.

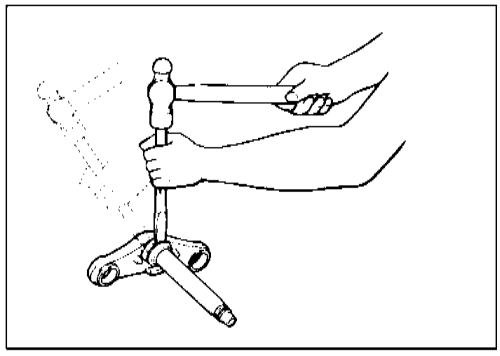

⚠CAUTION

- **Unless corrosion, damage or other abnormal condition is found , the bearing race need not be replaced.**
- **Once the lower inner race has been removed, replace it with a new one.**

- Drive out the steering stem bearing outer races using the special tools ① and ②.

TOOL 09941-54911: ① Bearing outer race remover
09941-74910: ② Steering bearing installer

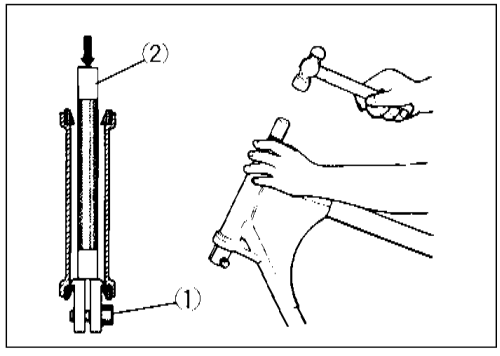

INSPECTION

Check the steering stem and steering stem head for any damage.
Check the bearing and race for corrosion, nick or other damage.

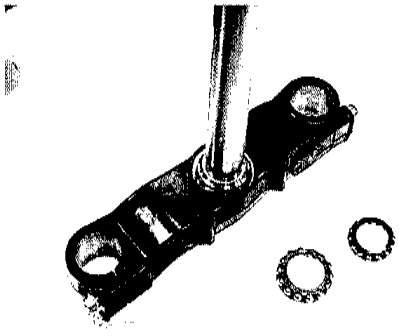

REASSEMBLY

Reassembly and reinstallation can be performed in the reverse order of removal and disassembly procedures. However, operate the work taking care for the following points.

- Press in the upper and lower outer race using the special tool.

TOOL 09941-34513: Steering race installer

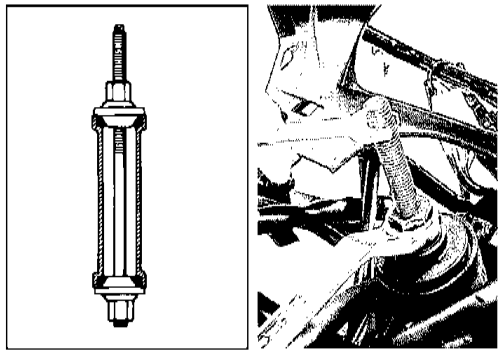

- Press in the lower stem bearing ①.

TOOL 09925-18011: Steering bearing installer

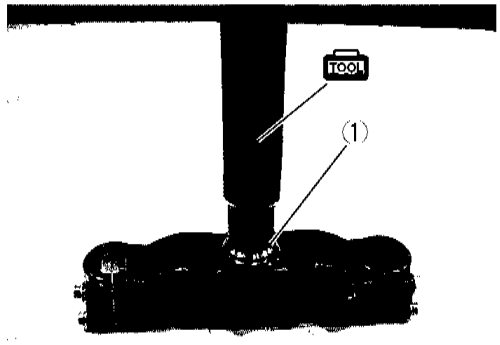

- Apply grease to the upper bearing, lower bearing and outer races prior to installing the steering stem.

99000-25010: SUZUKI SUPER GREASE "A"

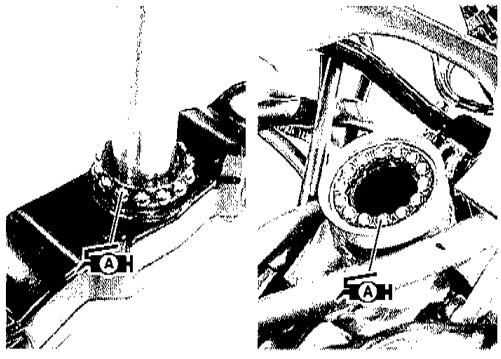

- Pass the steering stem through the upper front fender and install the stem.
- Tighten the steering stem nut.

Steering stem nut: 45N · m (4.5kg-m)

TOOL 09940-14911: Steering socket wrench
09940-11430: Steering stem nut socket

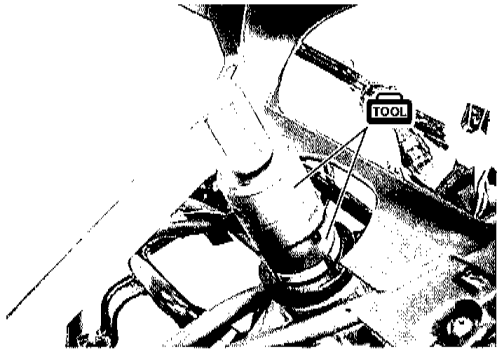

- Turn the steering stem right and left 5-6 times to break-in the bearing.
- Return the steering stem nut by 1/4 to 1/2 of a turn.
- In this condition, check that the steering stem can turn smoothly with no rattle and stiffness.
- If there is a rattle or heavy movement, adjust the tightness by the stem nut.

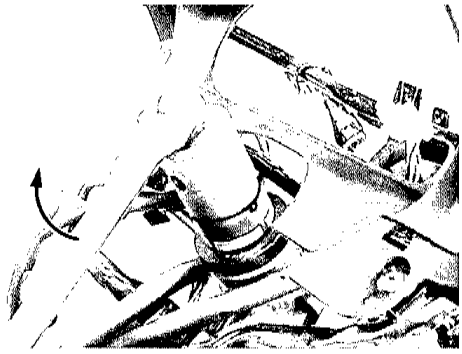

- Fit the washer ① with its tab Ⓐ engaged with the steering stem groove.

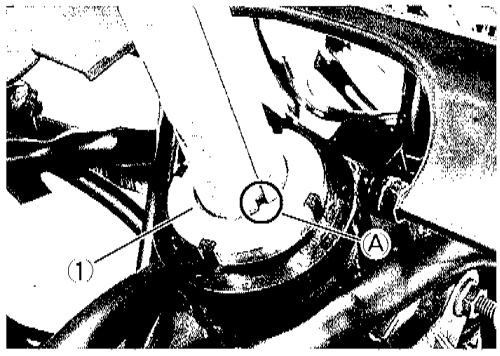

- Tighten the lock nut.

Lock nut: 30N · m (3.0kg-m)

TOOL 09940-14911: Steering socket wrench
09940-11420: Steering stem nut socket

NOTE:
Tightening the lock nut can affect the steering stem nut adjustment. Therefore, after tightening the lock nut, check the steering movement again and adjust if necessary.

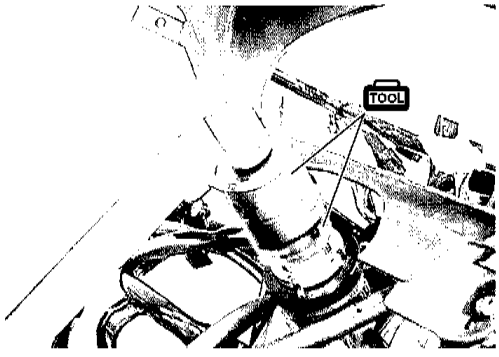

- Tighten the handlebar holder set bolt ① and handlebar holder clamp bolts ②.

Handlebar holder set bolt: 10N · m (1.0kg-m)
Handlebar holder clamp bolt: 23N · m (2.3kg-m)

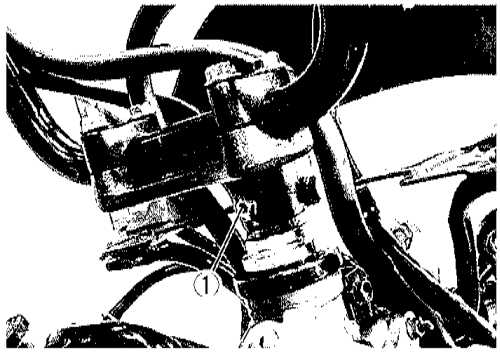

INSPECTION AFTER INSTALLATION

Steering system (See page 2-14.)

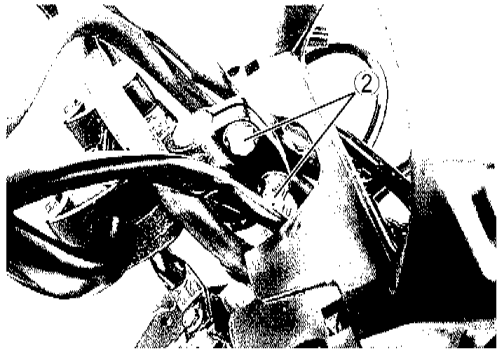

REAR WHEEL

REMOVAL

- Remove the right side leg shield. (See page 6-1.)
- Remove the exhaust pipe bolts.

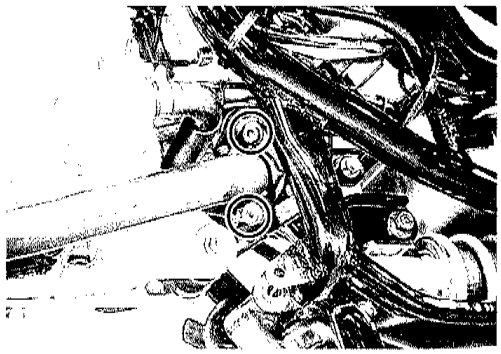

- Loosen the muffler mounting nuts and then remove the muffler.

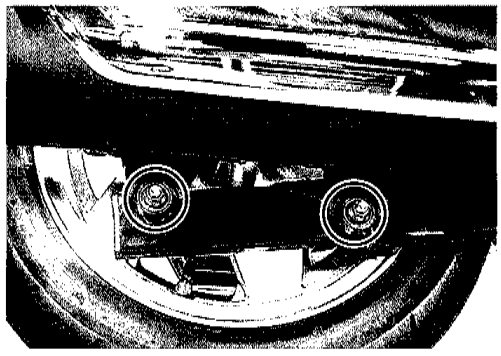

- Remove the muffler bracket.

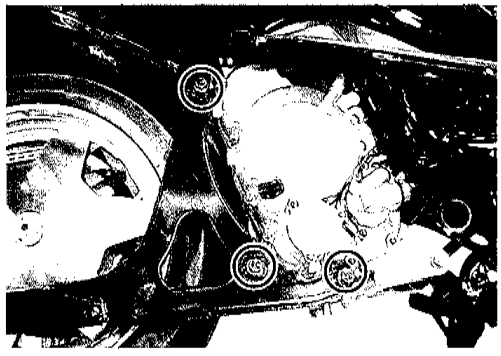

- Remove the rear axle nut and take out the rear wheel.

NOTE:

A self-lock nut is used for the rear axle nut. Limit the repeated usage of this nut to the maximum of 2-3 times.

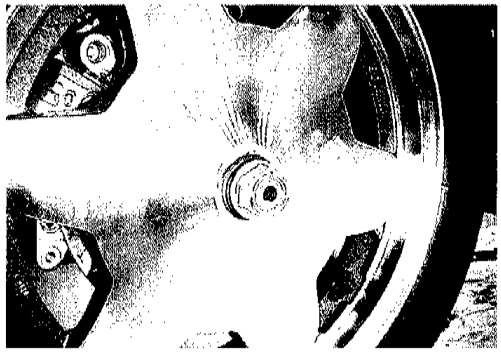

INSPECTION

TIRE

For inspection of tire, see page 2-15.

REAR WHEEL

Turn the rear wheel with the brake caliper removed and measure runout using a dial gauge.

If the runout measured exceeds the service limit, overhaul the rear axle and check for the cause. (See page 3-14.)

Service Limit

Rear wheel runout (Radial and Axial): 2.0 mm

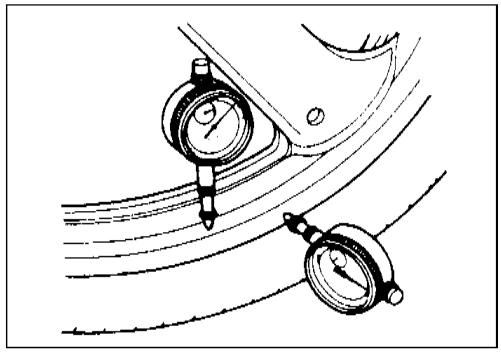

REASSEMBLY

Reassemble the rear wheel in the reverse order of disassembly procedures while observing the following points.

- Position the rear wheel and install the washer①and rear axle nut②.
- Tighten the rear axle nut②to the specified torque.

Rear axle nut: 100 N · m (10.0 kg-m)

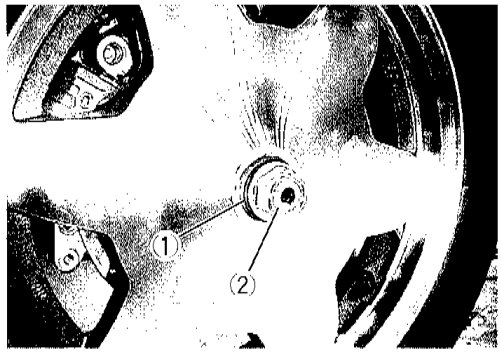

- Tighten the muffler bracket bolts to the specified torque.

Muffler bracket bolt: 50 N · m (5.0 kg-m)

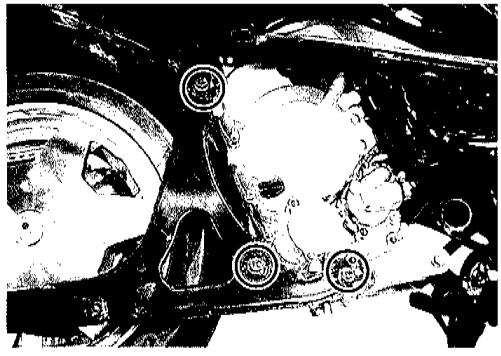

- Install the bolts from the rear wheel side and assemble the washers, muffler and nuts in that order.
- Tighten the muffler mounting nuts to the specified torque.

Muffler mounting nut: 23 N · m (2.3 kg-m)

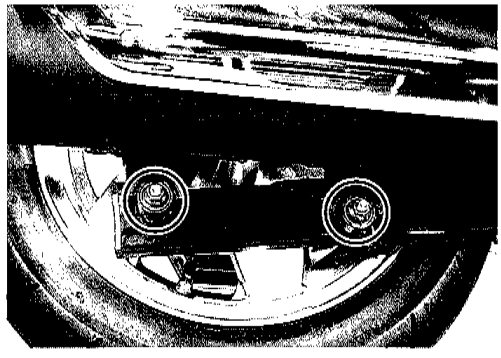

- Tighten the exhaust pipe bolts.

Exhaust pipe bolt: 23 N · m (2.3 kg-m)

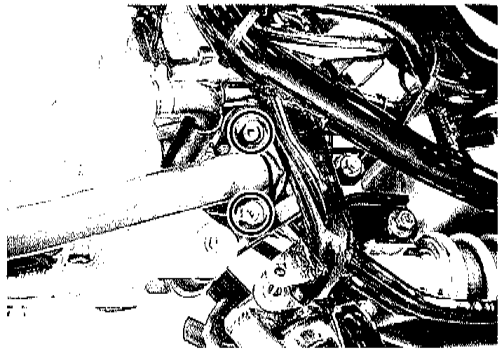

REAR BRAKE

⚠WARNING

- **Do not mix with brake fluid of different brand.**
- **Do not use a brake fluid kept in a open container or stored for long period of time.**
- **To store brake fluid, make sure to seal the container and keep it in a safe place to be out of reach of children.**
- **When filling brake fluid, take care not to allow water or dirt to enter the system.**
- **To wash the brake system parts, use brake fluid and not any other material.**
- **Do not allow dirt and fluids to contact the brake disc or pad.**

⚠CAUTION

Do not allow brake fluid to contact the paint surface, plastic or rubber parts, or its chemical reaction can cause discoloration or crack.

BRAKE FLUID REPLACEMENT

- For details of brake fluid replacement, refer to page 2-12.

BRAKE PAD REPLACEMENT

- Remove the rear wheel. (See page 6-43.)
- Remove the caliper mounting bolts.

Caliper mounting bolt: 25 N · m (2.5kg-m)

⚠CAUTION

When tightening the caliper mounting bolts, make sure that the brake disc is slid on the axle all the way to the end.

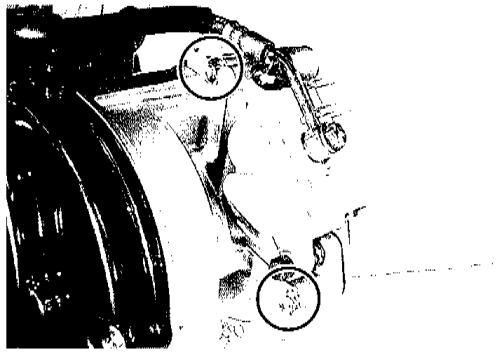

- Remove the pad mounting pins.

Pad mounting pin: 18 N · m (1.8kg-m)

- Remove the brake pads.

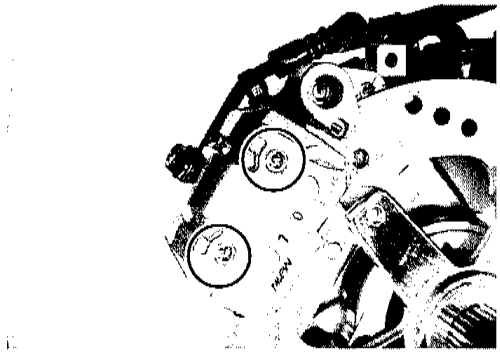

- To reassemble, follow the reverse order of the above procedures. On completion of assembly, inspect the brake system. (See page 2-10.)

CALIPER REMOVAL AND DISASSEMBLY

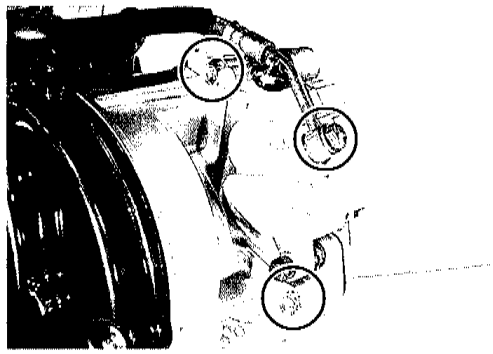

- Drain brake fluid from the combination brake reservoir. (See page 2-12.)
- Remove the rear wheel. (See page 6-43.)
- Remove the caliper mounting bolts and union bolt.
- Remove the caliper.

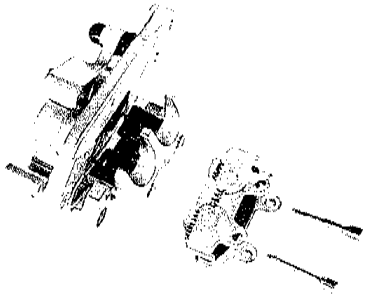

- Remove the brake pads. (See page 6-45.)

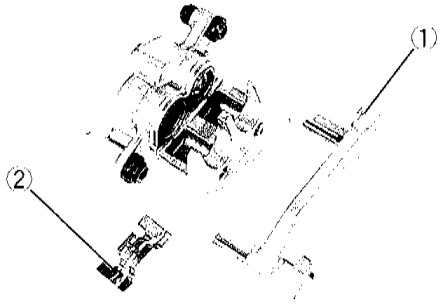

- Remove the caliper bracket①and pad spring②.

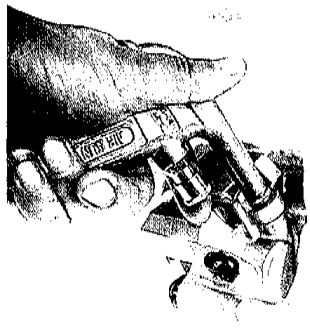

- Using an air blow gun, pressurize the caliper fluid chamber to push out the piston.

⚠WARNING

- **Place a rag over the piston to prevent it from popping out and flying and keep hand off the piston.**
- **Be careful of brake fluid which can possibly splash.**
- **Do not use high pressure air but increase the pressure gradually.**

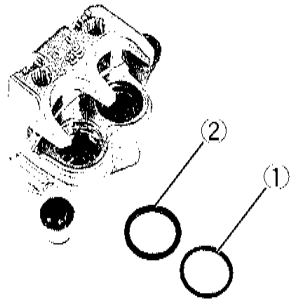

- Remove the dust seals①and piston seals②.

⚠CAUTION

- **Use care not to cause scratch on the cylinder bore.**
- **Do not reuse the piston seal and dust seal that have been removed.**

CALIPER INSPECTION

Caliper (See page 6-25.)
Piston (See page 6-25.)

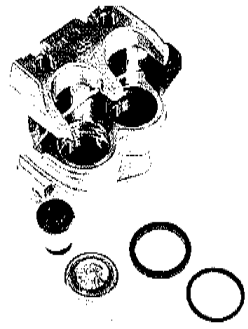

CALIPER REASSEMBLY

Reassemble the caliper in the reverse order of disassembly procedures and observe the following points.

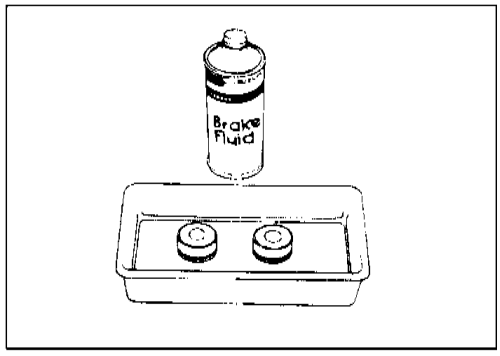

⚠CAUTION

- **Wash the caliper components with fresh brake fluid before reassembly. Do not wipe off brake fluid after washing the components.**
- **Replace the piston seal and dust seal with new ones with brake fluid applied.**

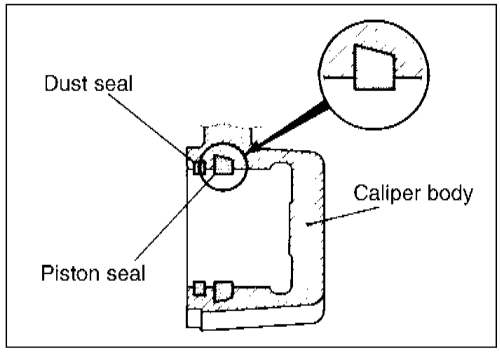

Brake fluid specification and classification: DOT4

- Apply silicone grease to the caliper axles.

99000-25100: SILICONE GREASE

- Assemble the pad spring.

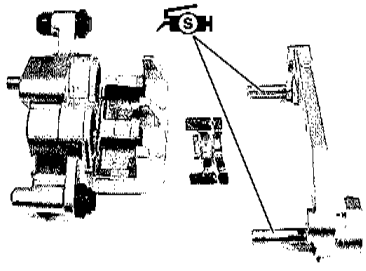

⚠CAUTION

When tightening the caliper mounting bolts, make sure that the brake disc is slid on the axle all the way to the end.

- Tighten the caliper mounting bolts.

Caliper mounting bolt: 25 N · m (2.5kg-m)

- Tighten the union bolt.

Union bolt: 23 N · m (2.3kg-m)

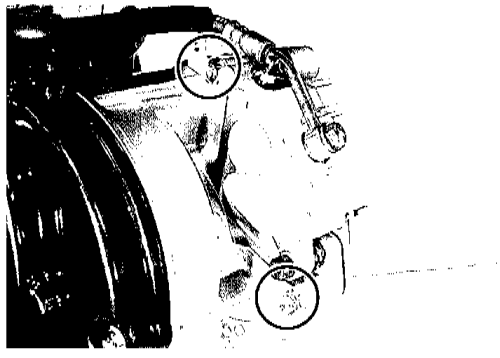

INSPECTION AFTER REASSEMBLY

Brake fluid inspection (See page 2-10.)
Brake fluid replacement (See page 2-12.)

REAR BRAKE DISC REMOVAL AND DISASSEMBLY

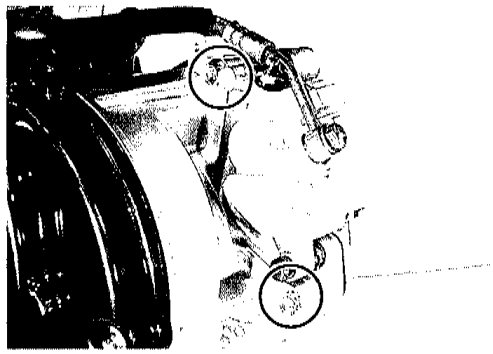

- Remove the rear wheel. (See page 6-43.)
- Loosen the caliper mounting bolt and remove the caliper.

NOTE:
Hold the caliper so as not to cause undue stress on the brake hose.

- Remove the brake disc from the axle shaft.

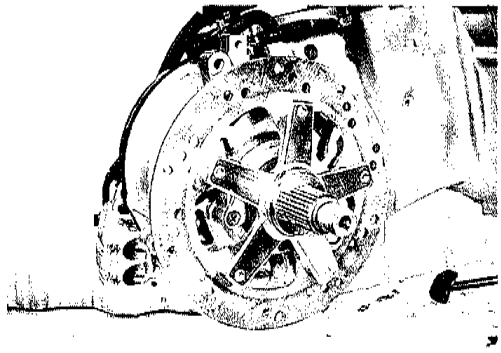

- Loosen the bolt and disassemble the brake disc.

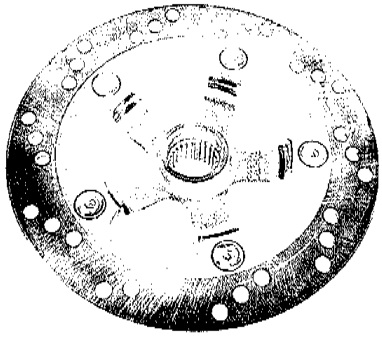

REAR BRAKE DISC REASSEMBLY

Perform the reassembly operation in the reverse order of disassembly procedures and observe the following points:

- With thread lock super applied to the threads, tighten the bolts.

1360 99000-32130: THREAD LOCK SUPER "1360"

Brake disc bolt: 23 N · m (2.3 kg-m)

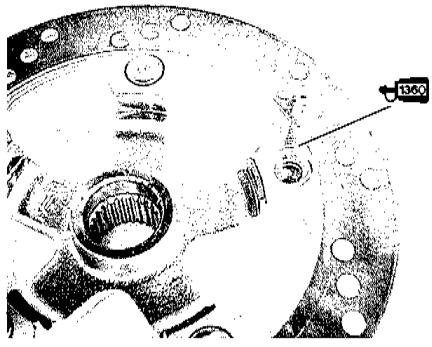

⚠CAUTION

When tightening the caliper mounting bolts, make sure that the brake disc is slid on the axle all the way to the end.

Caliper mounting bolt: 25 N · m (2.5 kg-m)

REAR BRAKE DISC INSPECTION

- For details of the brake disc inspection, refer to page 6-26.

MASTER CYLINDER REMOVAL AND DISASSEMBLY

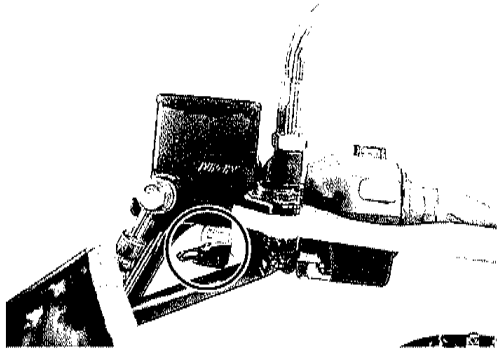

- Remove the left and upper handlebar covers. (See page 6-1.)
- Drain brake fluid from the combination brake reservoir. (See page 2-12.)
- Disconnect the brake light switch lead wires.

- Remove the union bolt ①.

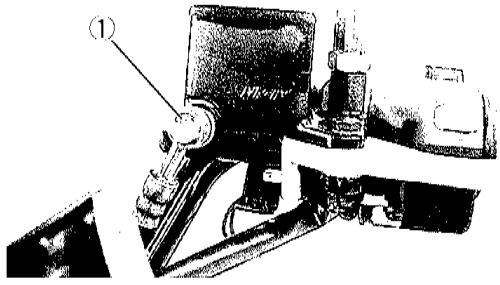

⚠CAUTION

Place a rag under the union bolt so that brake fluid may not contact the parts.

- Remove the master cylinder.

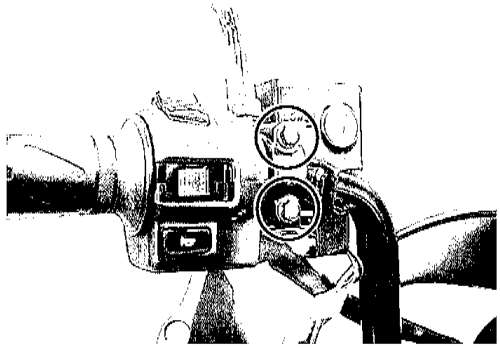

- Remove the brake light switch ① and brake lever ②.

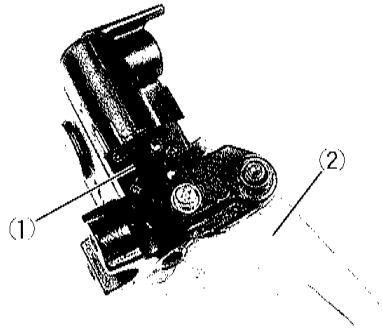

- Detach the dust seal boot ③ and remove the circlip.
- Take out the piston / cup set ④ and spring ⑤.

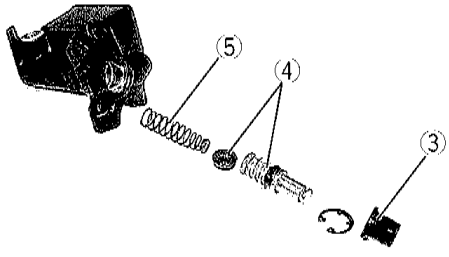

MASTER CYLINDER INSPECTION AND REASSEMBLY

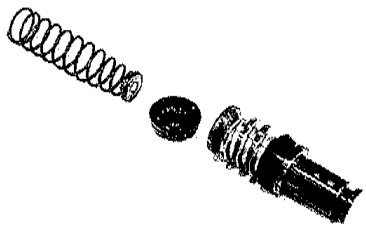

Inspect the cylinder wall, piston / cup set and spring for scratch, corrosion or other damages.
If any abnormal condition is noted, replace the inner parts or master cylinder.

Reassemble the master cylinder in the reverse order of disassembly procedures and observe the following points.

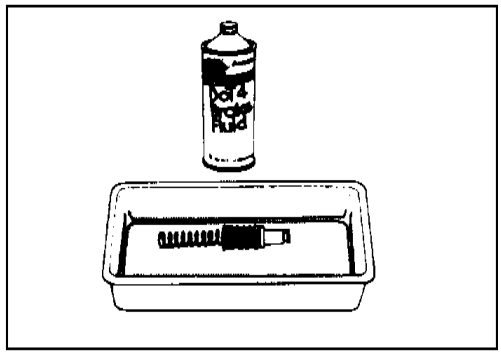

⚠CAUTION

- **Wash each component with fresh brake fluid before reassembly. Do not wipe off brake fluid after washing the components.**
- **Replace the cup set (piston, primary cup, secondary cup and spring) with a new one with brake fluid applied.**

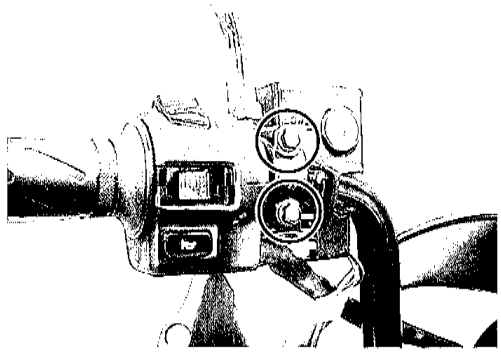

- Install the master cylinder. (See page 6-30.)
- Temporarily tighten the upper side master cylinder bolt first to provide clearance on the lower side. Then, tighten each bolt to specification.

Master cylinder bolt: 10 N · m (1.0 kg-m)

- Connect the brake hose (See page 9-13 and 14.) and tighten the union bolt.

Union bolt:23 N · m (2.3 kg-m)

- Fill the master cylinder with brake fluid and bleed air. (See page 2-13.)

INSPECTION AFTER REASSEMBLY

Brake (See page 2-10.)

DELAY VALVE REMOVAL

- Drain brake fluid from the combination brake system. (See page 2-12.)
- Remove the front fender. (See page 6-31.)
- Remove the union bolts ① and ②.

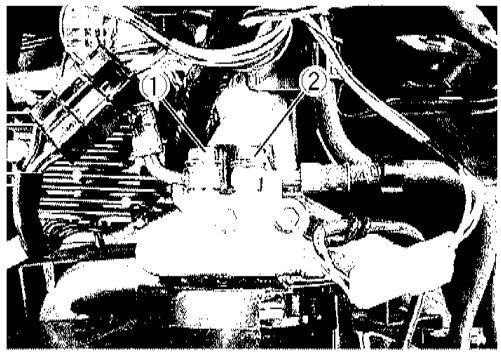

- Remove the brake pipe joint bolt.

- Remove the delay valve mounting bolts.

⚠CAUTION

Do not attempt to disassemble the delay valve.

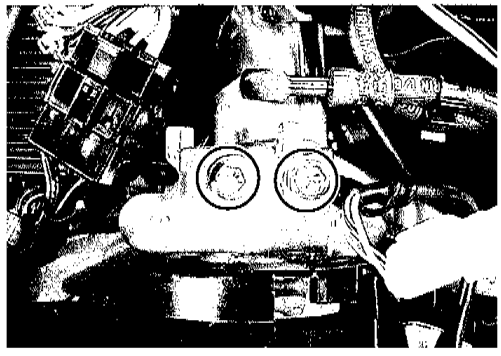

DELAY VALVE REINSTALLATION

Reinstall the delay valve in the reverse order of removal procedures and observe the following points.

- Tighten the delay valve mounting bolts ① together with the clamp.

Delay valve mounting bolt: 10 N · m (1.0 kg-m)

- With the brake hose end contacted to the stopper, tighten the union bolt.

Union bolt: 23 N · m (2.3 kg-m)

- Tighten the brake pipe joint bolt ②.

Brake pipe joint bolt: 16 N · m (1.6 kg-m)

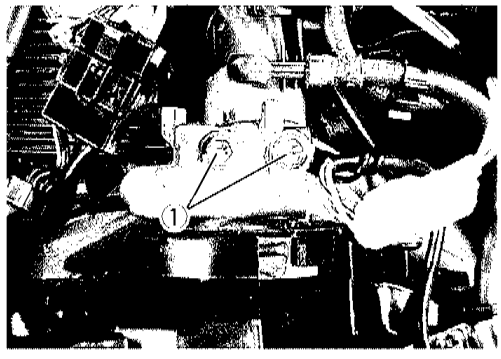

COMBINATION BRAKE SYSTEM

A combination brake system (front and rear being hydraulically interlocked), capable of performing stable brake effectiveness, is employed in the brake system with disc brake used for both the front and rear wheels.

DELAY VALVE

To improve ease of brake operation by left brake lever with the combination brake system employed, the delay valve (hydraulic pressure control device) is used in the brake system.

The delay valve operates in three phases according to the degree of input force from the left brake lever so as to control the front and rear brake balance appropriately.

(1) Hydraulic pressure input ① ~ ② ·····Delay valve phase Ⓐ When the left brake lever input is small (range ① ~ ②), the delay valve does not function and a low fluid pressure will be output both to the front and rear calipers.

(2) Hydraulic pressure input ② ~ ③ ·····Delay valve phase Ⓑ When the input pressure rises higher than (1), the valve goes down and closes the passage to the front caliper causing the rear brake to function first and restricting the initial front brake force.

(3) Hydraulic pressure input ③ ~ ④ ·····Delay valve phases Ⓑ & Ⓒ alternately.
When the input pressure further rises, the valve is pushed down again and fluid pressure is then transmitted to the front caliper. In this phase, the pressure output to the front caliper increases at a given ratio with its rise lagging behind the rear caliper.

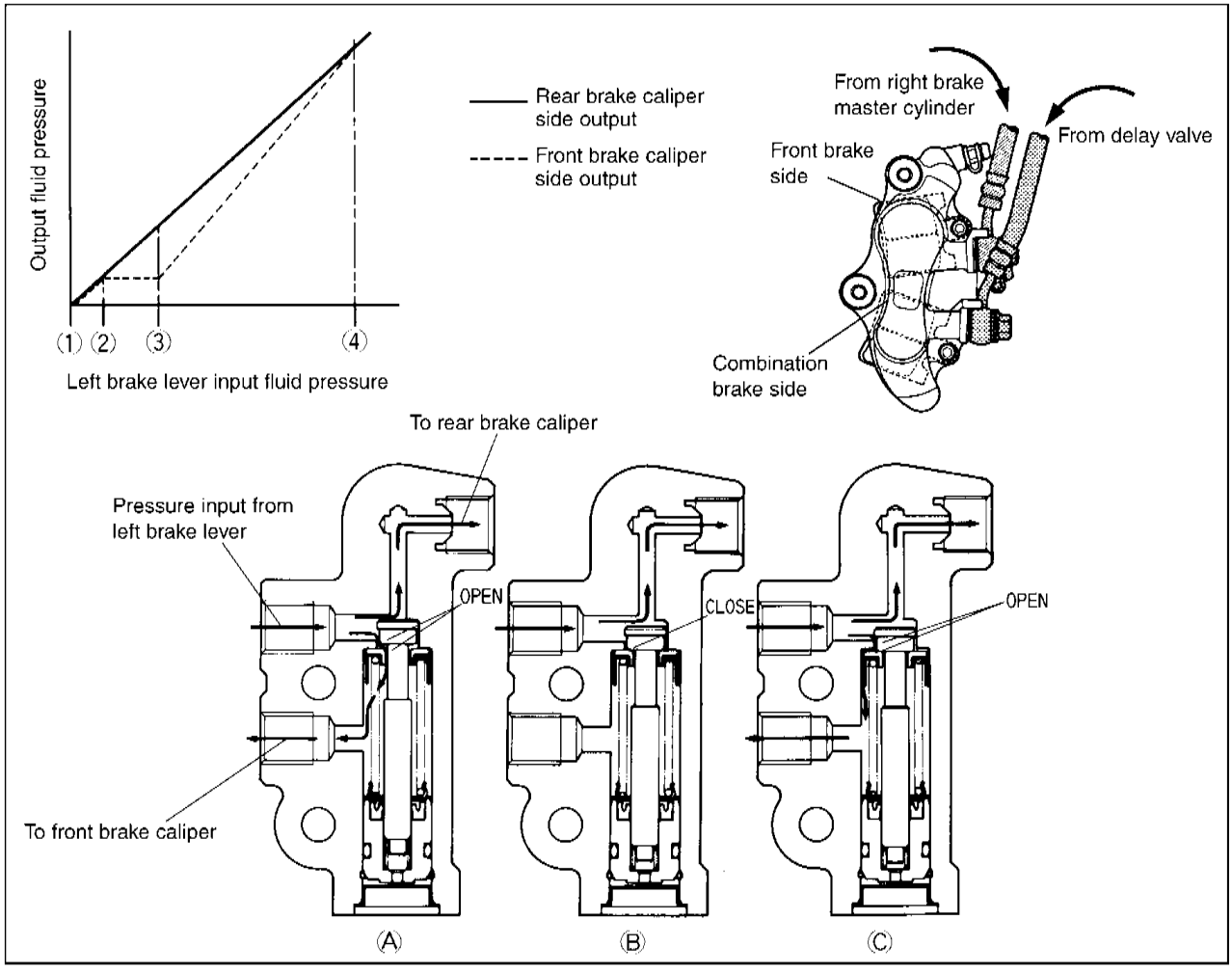

REAR SUSPENSION

REMOVAL AND DISASSEMBLY

- Remove all the frame covers, side and lower leg shields and rear leg shield. (See page 6-1.)
- Remove the lower cover ① (by loosing four bolts).

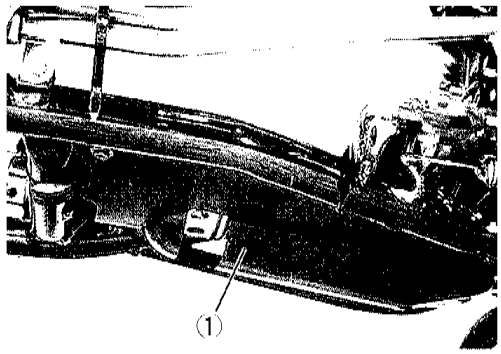

- Remove the fuel pump mounting bolts.

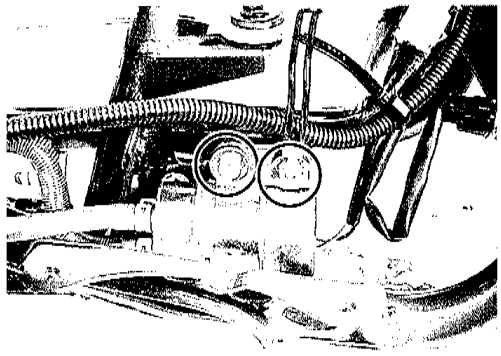

- Loosen and remove the rear shock absorber front bolt①, cushion lever mounting nut ② and rear cushion rod nut ③.

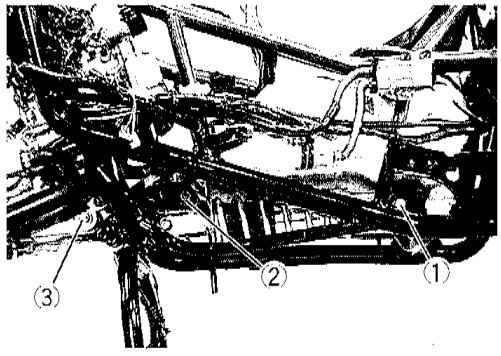

NOTE:
If the rear cushion rod bolt Ⓐ contact the frame and does not come out, push down the rear end of the chassis slightly.

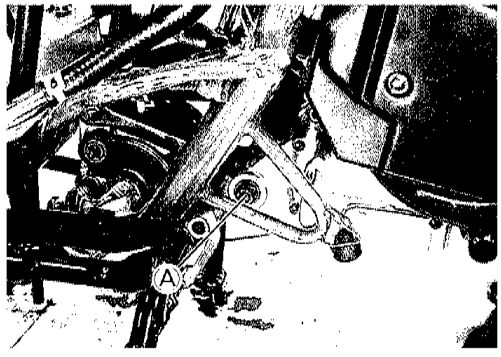

- Remove the cushion lever nut ④ and cushion rod nut ⑤ and disassemble the rear suspension linkage.

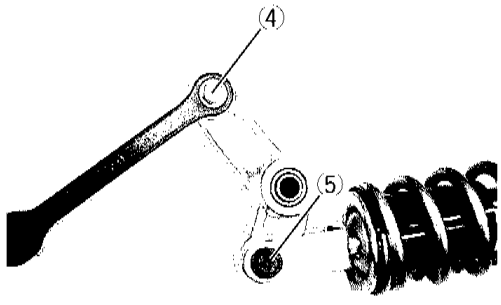

CUSHION LEVER INSPECTION

Check the cushion lever body for crack, break or other abnormal condition.
Attempt to move the spacer laterally to see that no play exists. Also, check the spacer for smooth turning.
If any abnormal condition is noted in the spacer movement, replace the bearing.

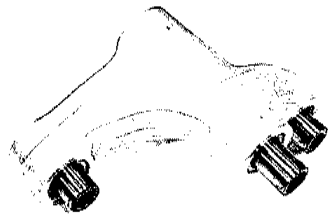

BEARING REPLACEMENT

- Remove the cushion lever bearings using the special tools.

TOOL **09943-88211: ① Bearing installer**
09923-73210: ② Bearing remover
09930-30102: Sliding shaft

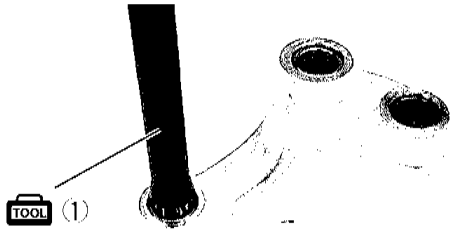

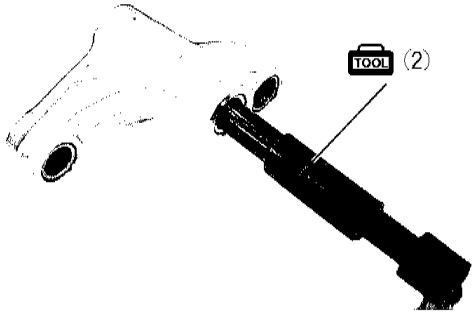

- To install, press-in the bearings using the special tool.

TOOL **09941-34513: Steering race installer**

⚠CAUTION

When press-fitting the bearing, the bearing should be positioned so that its stamped mark side faces the tool.

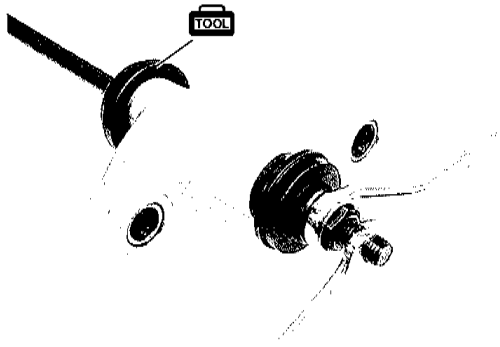

REAR SHOCK ABSORBER INSPECTION

Check the rear shock absorber for oil leakage.

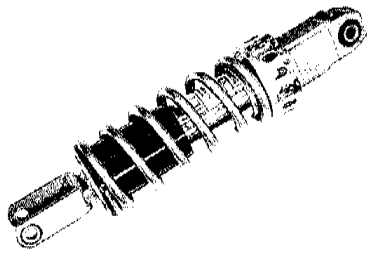

Check the bushing for play and damage.
Check the rear shock absorber spring for crack or other damage.

Standard position: 3rd

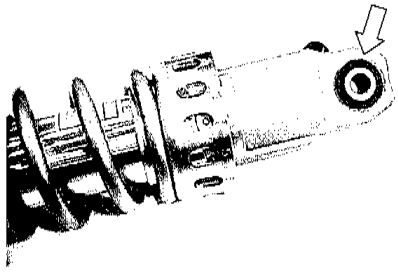

REAR SHOCK ABSORBER SCRAPPING PROCEDURE

⚠WARNING

- **Handle the rear shock absorber with caution since a high pressure nitrogen gas is contained.**
- **Avoid incineration, exposure to high pressure or overhauling.**

⚠WARNING

In the case of scrapping the rear shock absorber, evacuate gas in the following procedures.

REAR SHOCK ABSORBER GAS EVACUATION

- Remove the valve cap ①.
- Evacuate gas through the valve hole.

⚠WARNING

Keep your face away from the valve hole.

REASSEMBLY

Reassemble the rear suspension in the reverse order of disassembly procedures and observe the following instructions.

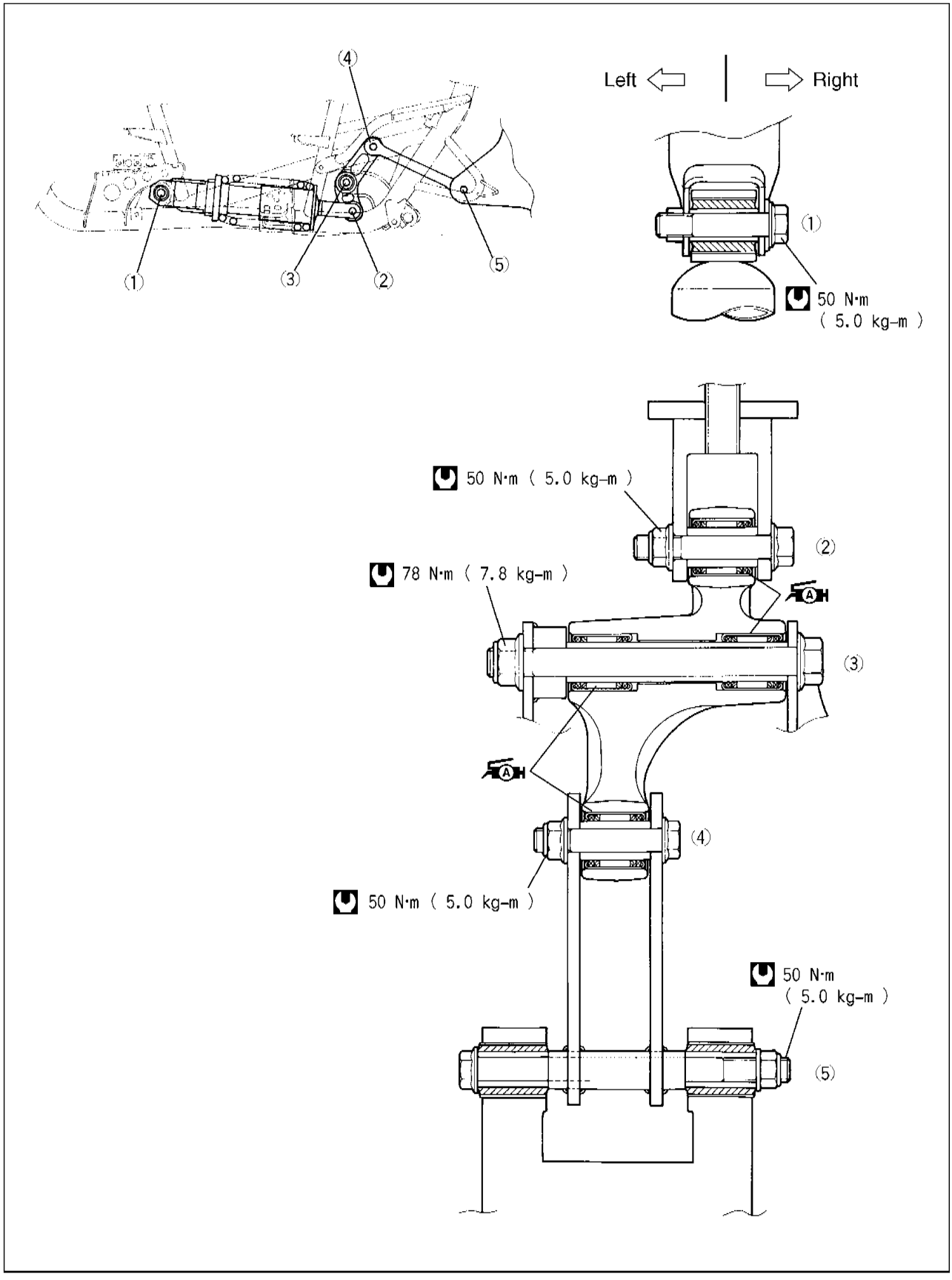

- Prior to assembly, apply grease to each spacer and bearing.

99000-25010: SUZUKI SUPER GREASE "A"

- Assemble the rear shock absorber and rear cushion lever referring to the illustration in the previous page.

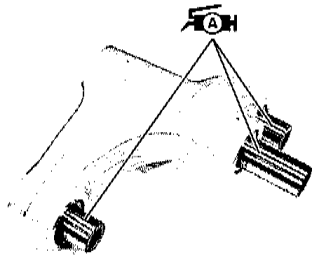

- Install the rear suspension on the chassis and tighten with bolts and nuts referring to the illustration in the previous page.

NOTE:

Pass the cushion lever mounting bolt after all other bolts have been inserted.

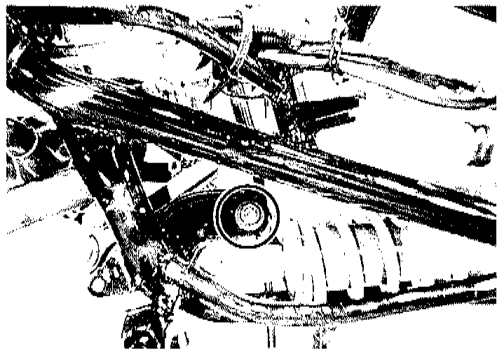

CRANKCASE BRACKET

REMOVAL AND DISASSEMBLY

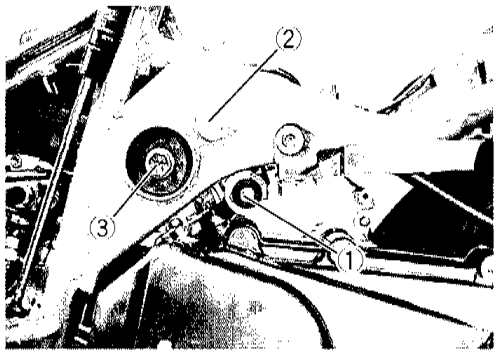

- Loosen the engine mounting nut ①.
- Also loosen the crankcase bracket nut ② and rubber damper bolt ③.

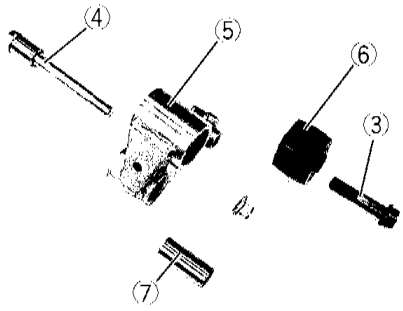

- After removing the engine mounting shaft, take off the crankcase bracket bolt ④ and rubber damper bolt ③.
- Remove the crankcase bracket ⑤, rubber damper ⑥ and spacer ⑦.

INSPECTION

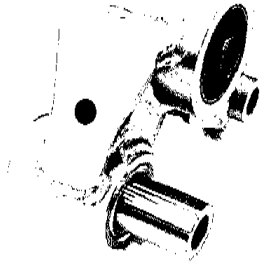

With the spacer inserted in the bearing, check that the spacer turns smoothly without vertical and horizontal play. Replace the component if any abnormal condition is noted. Check the rubber damper and bushing for crack and damage and replace if such a defect is noted.

BUSHING REPLACEMENT

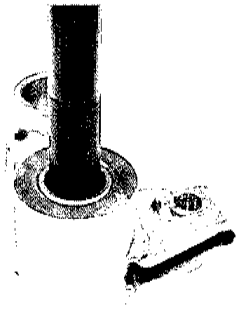

- Drive out the bushing using an appropriate rod.

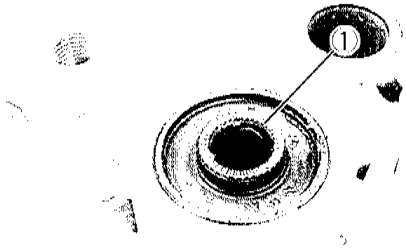

- Press in the bushing with its knurled end ① facing the frame.

BEARING REPLACEMENT

- Remove the bearings ① and ② using the special tools.

TOOL 09925-98221: ① Bearing installer
09923-74510: ② Bearing remover
09930-30102: Sliding shaft

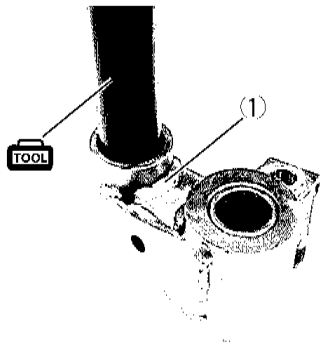

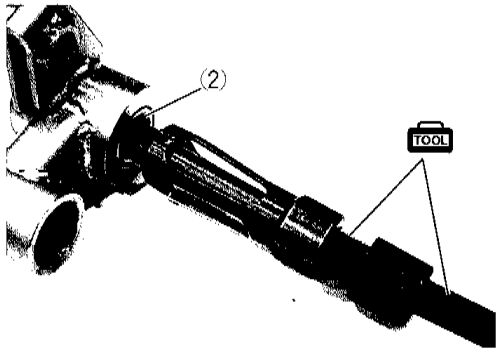

- Press in the bearing using the special tool.

TOOL 09924-84521: Bearing installer set

NOTE:
When press-fitting the bearing, the bearing should be positioned so that its stamped mark side contacts the tool.

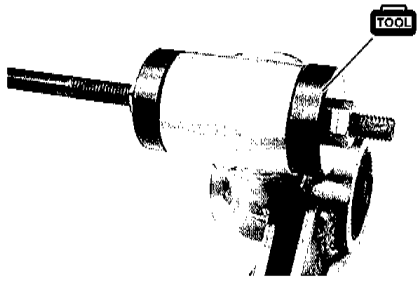

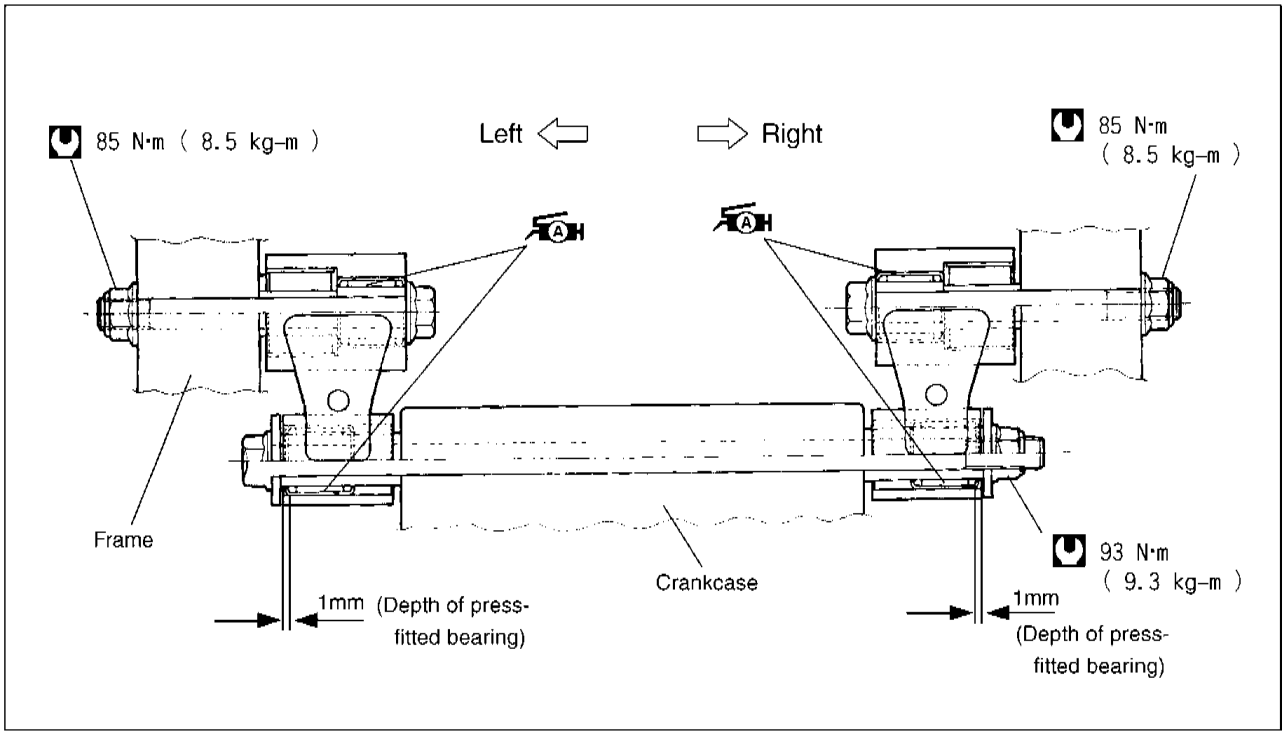

REASSEMBLY

Perform the reassembly in the reverse order of the disassembly procedures while observing the following points.

LEFT CRANKCASE BRACKET REASSEMBLY PROCEDURE

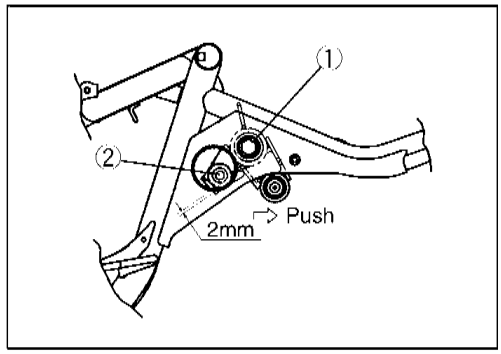

- Tighten the crankcase bracket nut ① temporarily.
- Temporarily assemble the washer and rubber damper bolt ② without installing the rubber damper.
- Push the crankcase bracket in the direction shown by the arrow to provide clearance of 2mm between the rubber damper hole and the washer, hold the bracket in that position and tighten the crankcase bracket nut ① to specification.

Crankcase bracket nut: 85 N · m (8.5 kg-m)

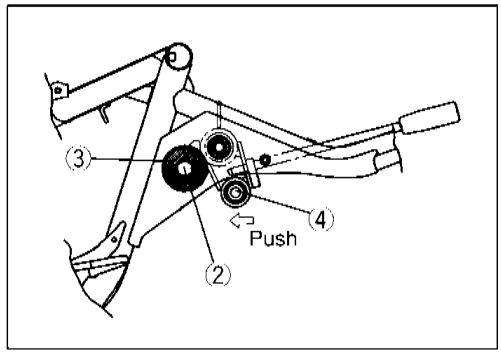

- Insert a steel rod into the crankcase bracket and move the bracket to the direction shown by the arrow.
- Install the rubber damper ③ and washer and tighten the rubber damper bolt ② .

Rubber damper bolt: 85 N · m (8.5 kg-m)

NOTE:

The right crankcase bracket can be assembled in the similar method.

- Tighten the engine mounting nut ④ .

Engine mounting nut: 93 N · m (9.3 kg-m)

TIRE AND WHEEL

TIRE REMOVAL

The most critical factor of a tubeless tire is the seal between the wheel rim and the tire bead. For this reason, it is recommended to use a tire changer that can satisfy this sealing requirement and can make the operation efficient as well as functional.

For operating procedures, refer to the instructions supplied by the tire changer manufacturer.

NOTE:

When removing the tire in the case of repair or inspection, mark the tire with a chalk to indicate the tire position relative to the valve position.

Even though the tire is refitted to the original position after repairing puncture, the tire may have to be balanced again since such a repair can cause imbalance.

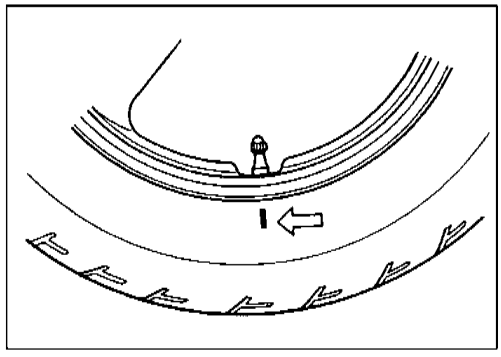

INSPECTION

WHEEL INSPECTION

Wipe the wheel clean and check for the following:

- Distortion and crack
- Nick or scratch on bead
- Wheel rim runout : Limit 2.0 mm (Axial and Radial)

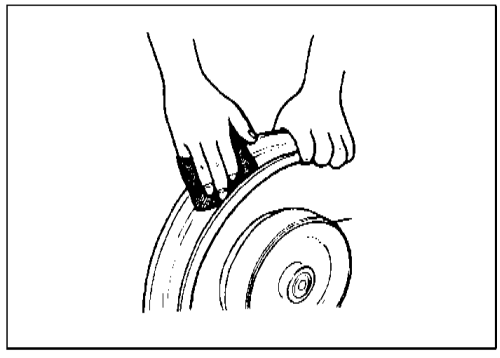

TIRE INSPECTION

Tire must be checked for the following points:

- Nick and rupture on side wall
- Tread remaining depth
- Separation of cord
- Abnormal, uneven wear on tread
- Surface damage on bead
- Localized tread wear due to skidding (Flat spot)
- Abnormal condition of inner liner

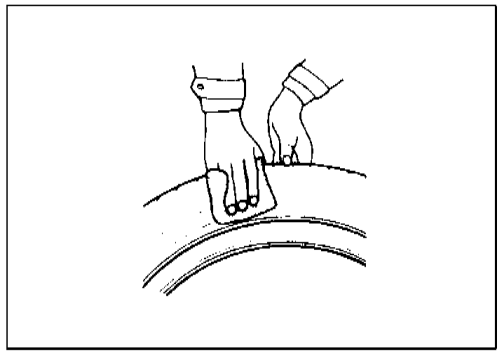

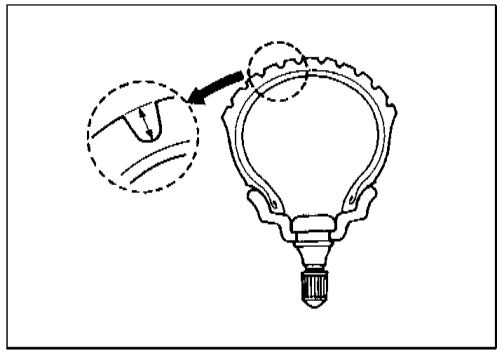

VALVE INSPECTION

Inspect the valve after the tire is removed from the rim. Replace the valve with a new one if the seal rubber is peeling or has damage.

NOTE:

If the external appearance of the valve shows no abnormal condition, removing of the valve is not necessary.

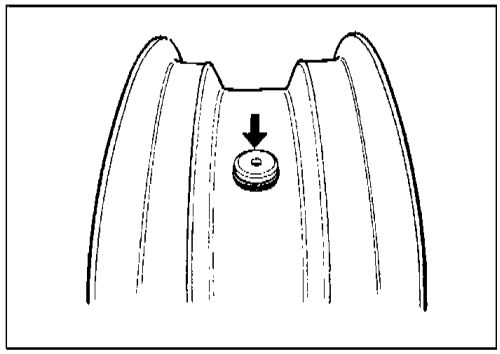

Inspect the valve core.

If the seal has abnormal deformation, replace the valve with a new one.

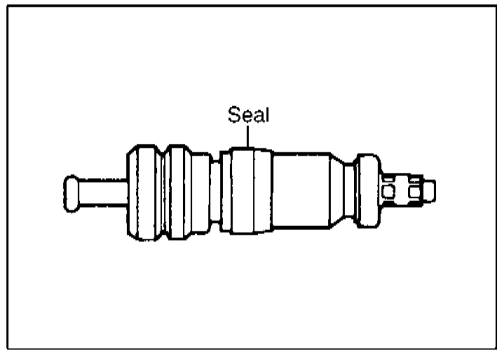

VALVE INSTALLATION

Any dust or rust around the valve hole must be cleaned off. Then install the valve in the rim.

NOTE:

To properly install the valve into the valve hole, apply a special tire lubricant or neutral soapy liquid to the valve.

⚠CAUTION

Be careful not to damage the lip of valve.

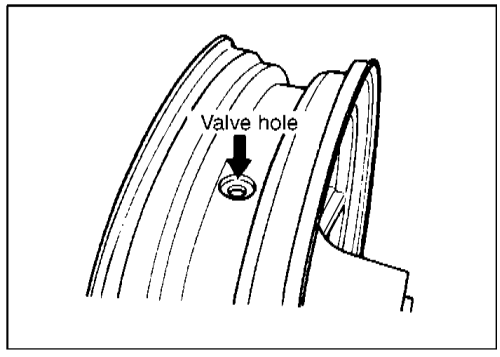

TIRE INSTALLATION

- Apply tire lubricant to the tire bead.
- When installing the tire onto the wheel, observe the following points.

⚠CAUTION

Do not reuse the valve which has been once removed.

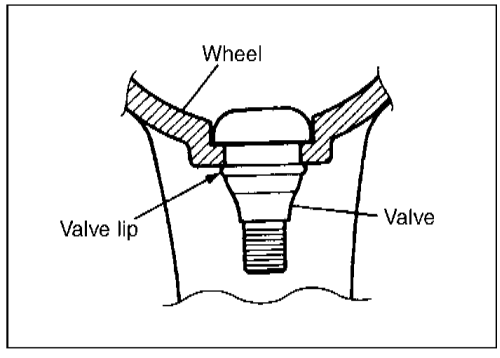

- The tire is designed to have specified rotational direction.

⚠CAUTION

Never use oil, grease or gasoline on the tire bead in place of tire lubricant.

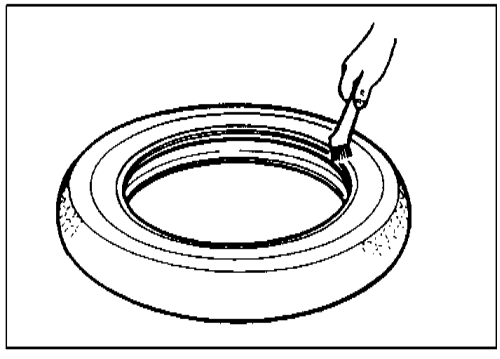

- When installing the tire, the arrow ① on the side wall should point the direction of wheel rotation.
- Align the chalk mark put on the tire at the time of removal with the valve position.

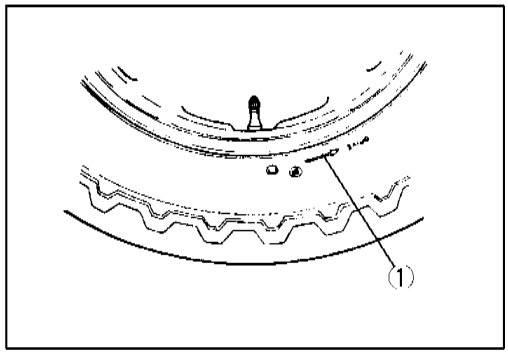

- For installation procedure of tire onto the wheel, follow the instructions given by the tire changer manufacturer.
- Bounce the tire several times while rotating. This makes the tire bead expand outward to contact the wheel, thereby facilitating air inflation.
- Pump up the tire with air.

⚠WARNING

- **Do not inflate the tire to more than 400 kPa (4.0kg/cm²). If inflated beyond this limit, the tire can burst and possibly cause injury. Do not stand directly over the tire while inflating.**
- **In the case of preset pressure air inflator, pay special care for the set pressure adjustment.**

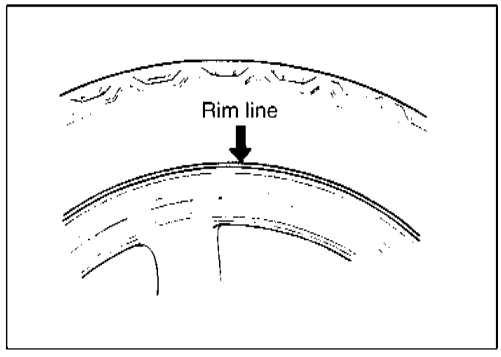

- In this condition, check the "rim line" cast on the tire side walls. The line must be equidistant from the wheel rim all around. If the distance between the rim line and wheel rim varies, this indicates that the bead is not properly seated. If this is the case, deflate the tire completely and unseat the bead for both sides. Coat the bead with lubricant and fit the tire again.
- When the bead has been fitted properly, inflate air and adjust the pressure to specification.
- As necessary, adjust the tire balance.

TIRE PRESSURE

Unit: kPa (kg/cm²)

	Front	Rear
Solo riding	175 (1.75)	200 (2.00)
Dual riding	175 (1.75)	280 (2.80)

⚠CAUTION

Do not run with a repaired tire at a high speed.

ELECTRICAL SYSTEM

CONTENTS

⚠CAUTION

- To inspect the electrical equipment, use Suzuki multi-circuit tester set (09300-25008).
- The dry battery used in the tester should not be deteriorated.
- Take care not to confuse the tester measuring range.
- Since the resistance value varies depending on temperature, the measurement must be used for reference purpose only.

CAUTIONS IN SERVICING

SNAP CONNECTOR

- When connecting a snap connector, be sure to push it in until a click is felt.
- Inspect the connector for corrosion, fouling and cover breakage.

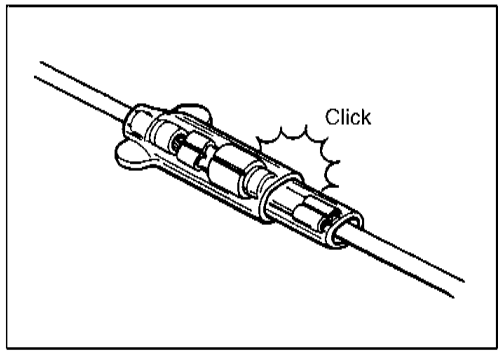

COUPLER

- In the case of a locking type coupler, be sure to release the lock before disconnecting. When connecting the coupler, push it in all the way until the lock is fastened.
- When disconnecting the coupler, be sure to hold the coupler body and do not pull the lead wires.
- Inspect each terminal on the coupler for looseness or bending.
- Inspect each terminal for corrosion and fouling.

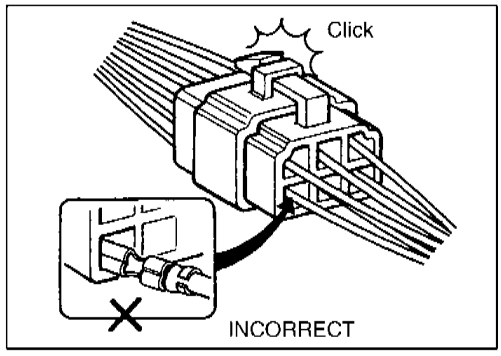

CLAMP

- Clamp the wiring harness at the position indicated in "WIRING HARNESS ROUTING."
- Bend the clamp properly so that the wiring harness is securely fixed.
- In clamping the wiring harness, use care not to allow it to sag.
- Do not use wire or any other material as a substitute for band type clamp.

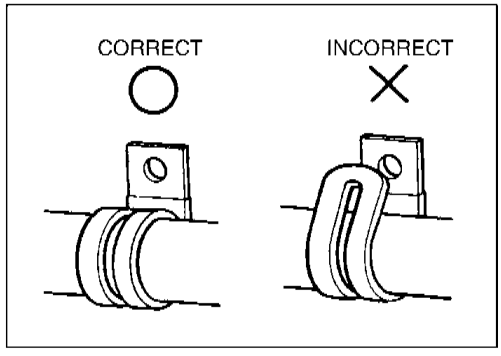

FUSE

- When a fuse blows, always investigate the cause, correct the problem and then replace the fuse.
- Do not use a fuse of a different capacity.
- Do not use wire or any other substitute.

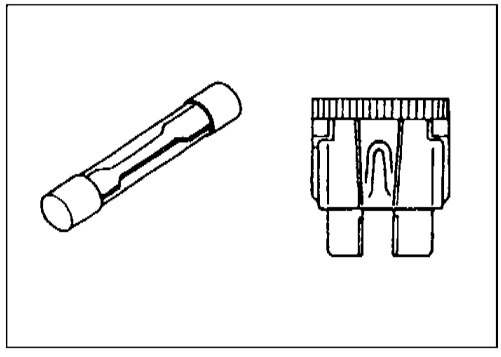

SEMI-CONDUCTOR EQUIPPED PART

- Be careful not to drop the part which has a semi-conductor built in such as a ignitor unit and regulator/rectifier.
- When inspecting these parts, follow the instructions carefully. Failure to follow the proper procedure can cause damage to these parts.

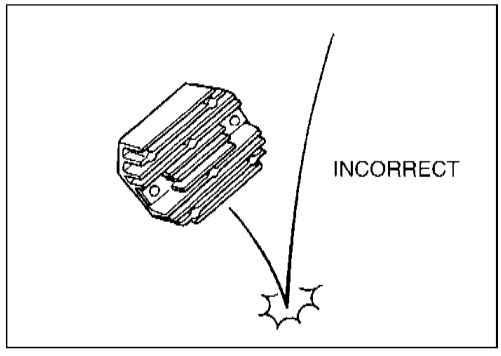

BATTERY

- The MF battery used in this vehicle does not require maintenance such as inspection of electrolyte level and filling of water.
- No hydrogen gas is produced during normal charging of the battery, but such a gas can be produced when overcharged. Therefore, keep the battery away from spark or fire during charging.
- Note that the charging system for the MF battery is different from that of an ordinary battery. Do not replace with an ordinary battery.

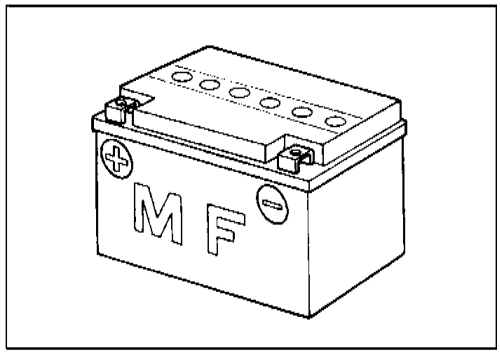

CONNECTING BATTERY

- When disconnecting terminals from the battery for disassembly or servicing purpose, be sure to disconnect the negative ⊖ terminal first.
- When connecting terminals to the battery, be sure to connect the positive ⊕ terminal first.
- If the terminal is found corroded, remove the battery, wash with lukewarm water and clean with a wire brush.
- Upon completion of connection, apply a little grease on the terminals.
- Put the cover over the positive ⊕ terminal.

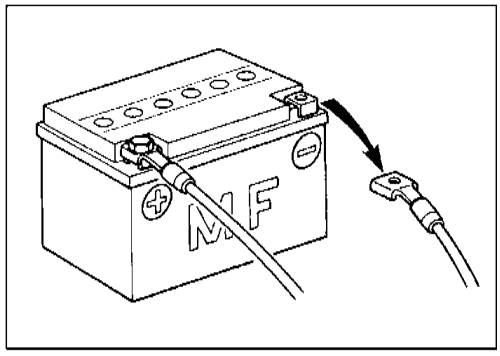

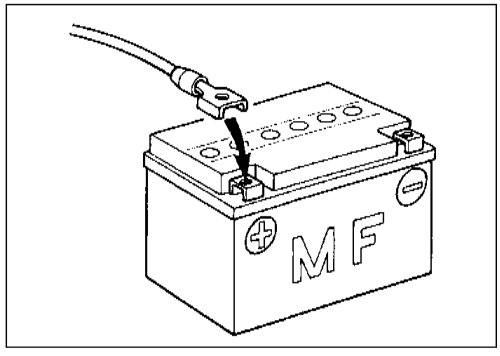

USING MULTI-CIRCUIT TESTER

- Use caution not to confuse the positive ⊕ probe from the negative ⊖ probe of the tester. A wrong connection may cause damage to the tester.
- If the voltage and current values are not known, start measuring in a higher range.
- Connecting the tester in the resistance range where voltage is applied may cause damage to the tester. When measuring resistance, check to make sure that no voltage is applied.
- After using the tester, turn the switch to the OFF position.

TOOL **09900-25008: Multi-circuit tester**

Multi-circuit tester set

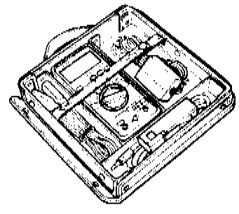

LOCATION OF ELECTRICAL COMPONENTS

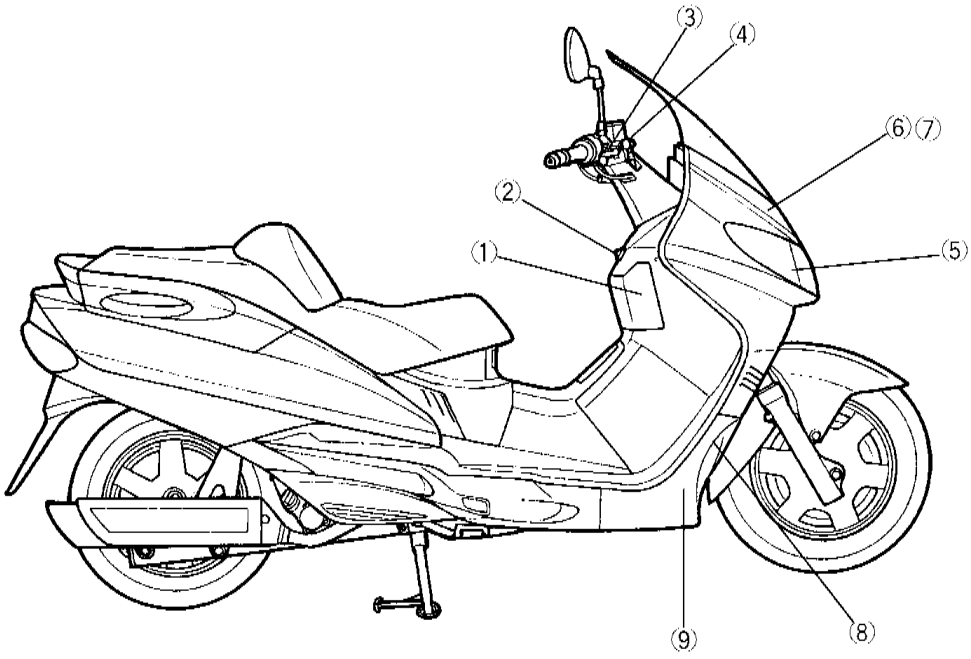

① Battery
② Ignition switch

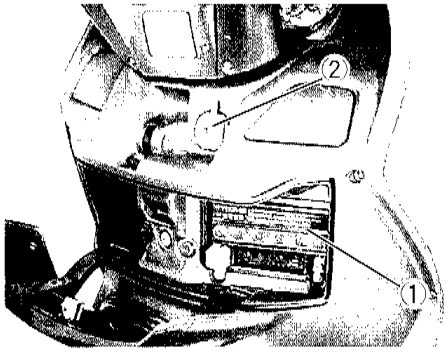

③ Right brake lever switch
④ Left brake lever switch

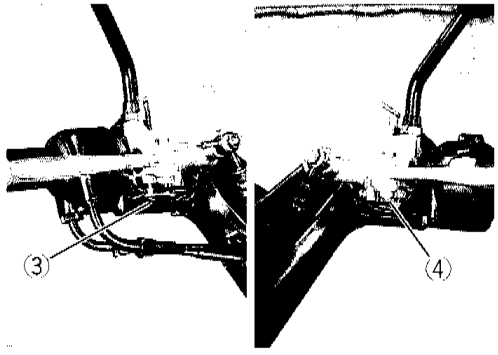

⑤ Regulator/rectifier
⑥ Fuse box
⑦ Turn signal relay/Side stand relay

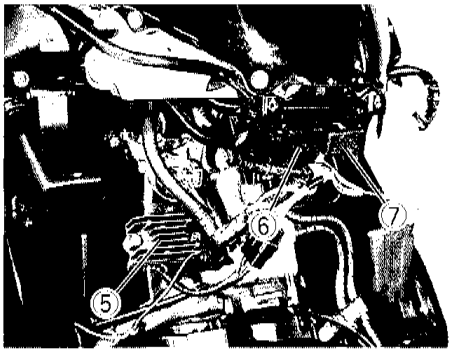

⑧ Radiator fan
⑨ Radiator fan switch

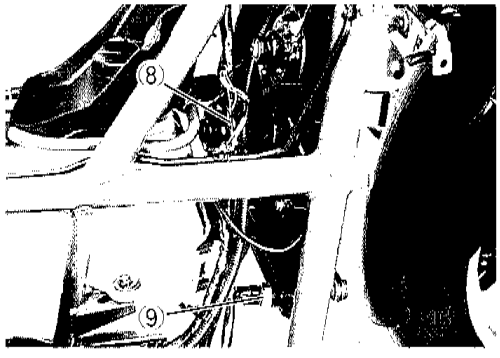

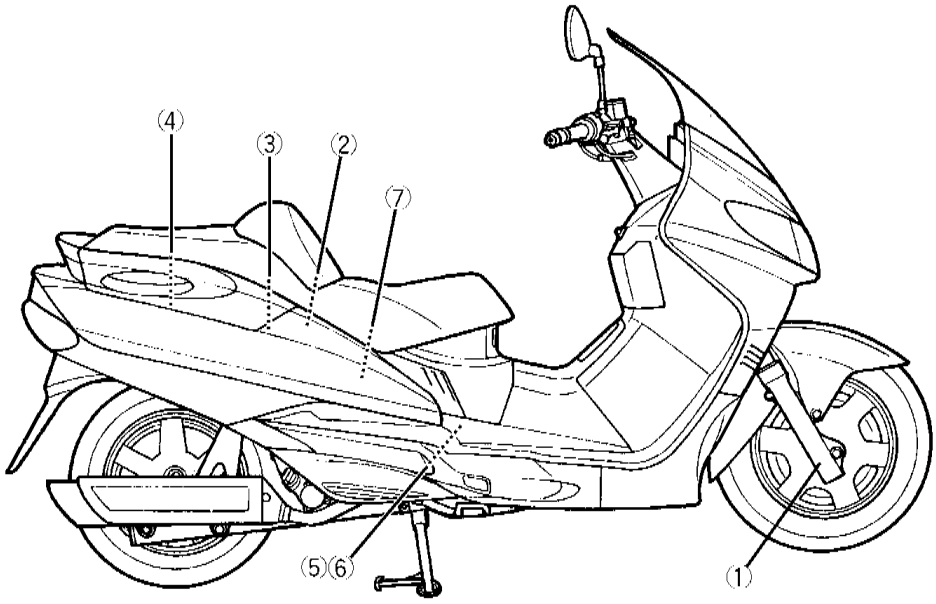

① Speed sensor

② Ignitor unit
③ Safety relay
④ Thermo-switch

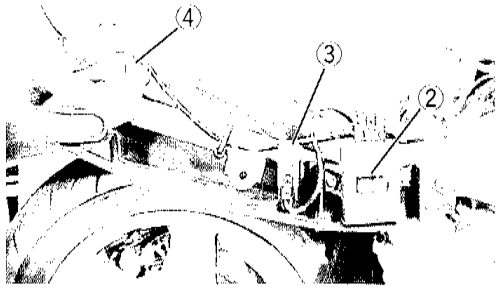

⑤ Starter relay
⑥ Main fuse

⑦ Starter motor

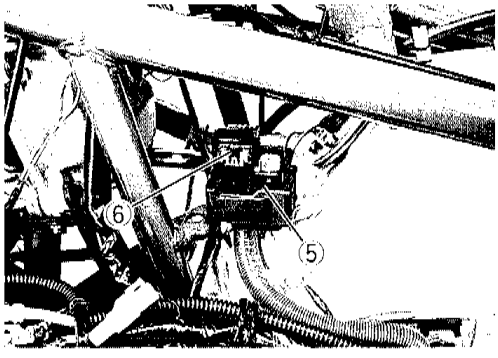

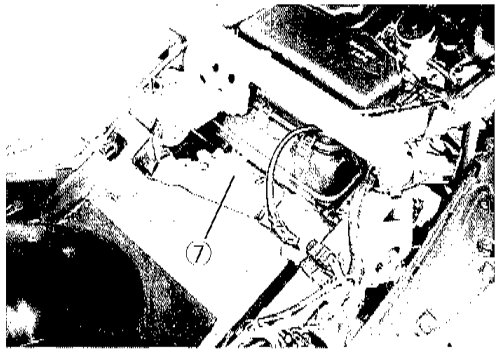

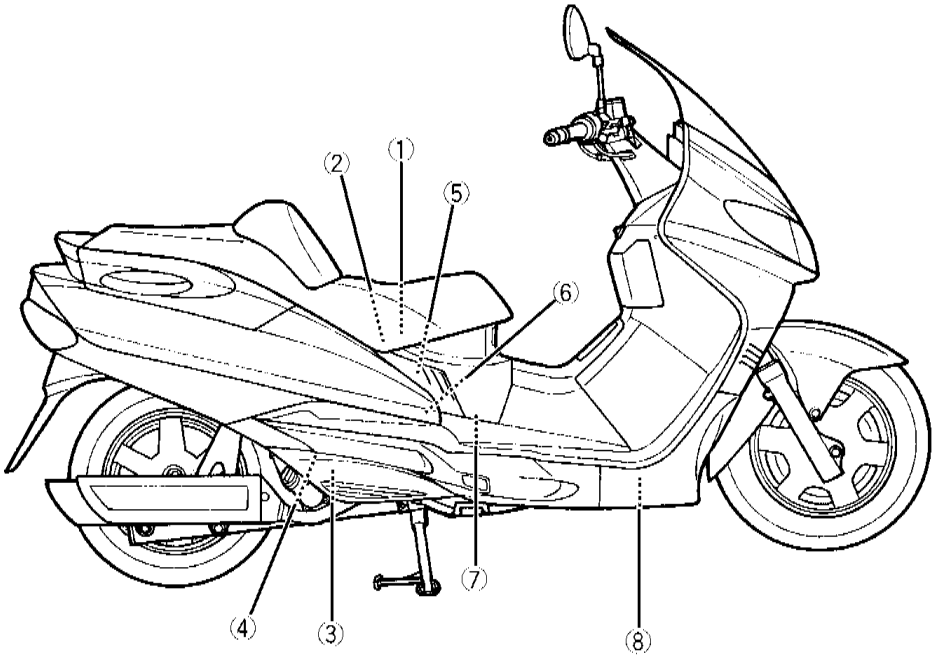

① Auto-starter
② Carburetor heater

③ Generator
④ Pick-up coil

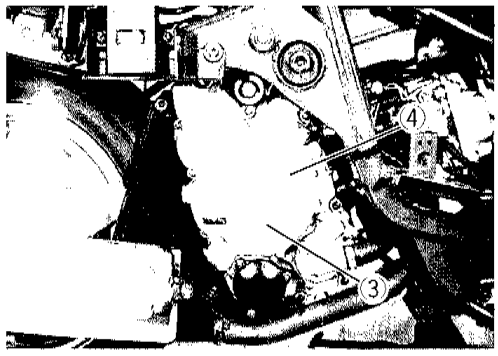

⑤ Water temperature gauge
⑥ Ignition coil

⑦ Fuel level gauge
⑧ Fuel pump

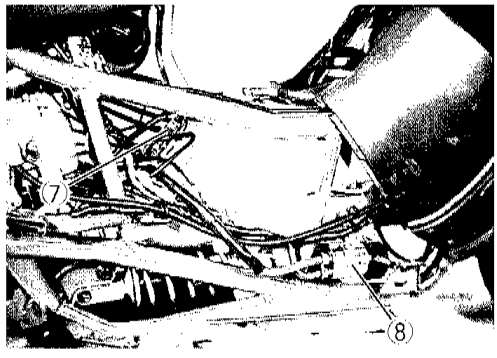

CHARGING SYSTEM

TROUBLESHOOTING

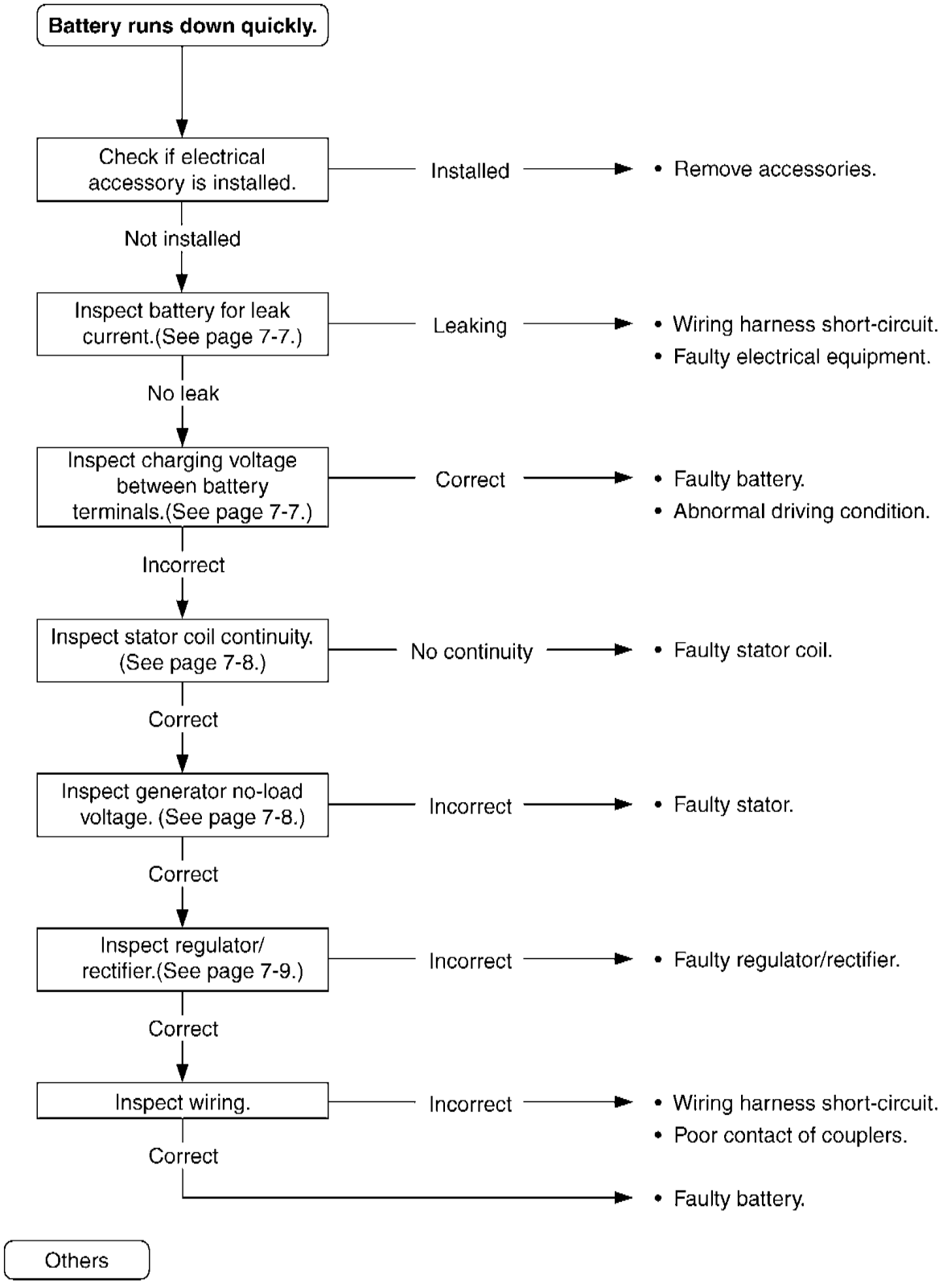

Others

Battery overcharge	• Faulty regulator/rectifier • Faulty battery

INSPECTION (CHARGING SYSTEM)

BATTERY LEAK CURRENT

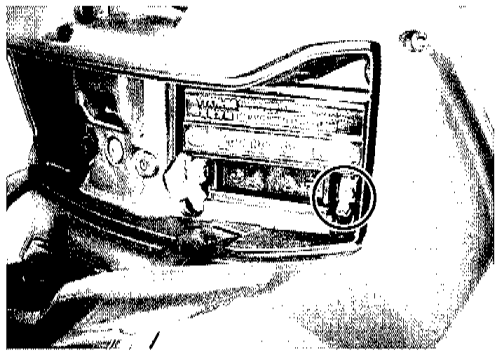

- Turn the ignition switch off.
- Remove the battery cover. (See page 7-30.)
- Disconnect the battery ⊖ lead wire.
- Connect the milliammeter between the battery ⊖ terminal and the ⊖ lead as shown and check for meter indication. If the tester needle swings more than the limit, leak current exists.

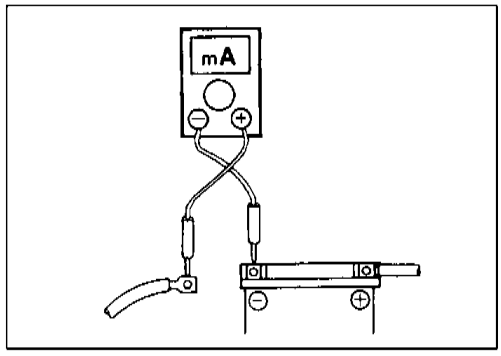

09900-25008: Suzuki Multi-circuit tester

Tester knob indication: Current (⎓ , 20mA)

Leak current : under 3mA

⚠CAUTION

- **To connect the ammeter, use a high testing range first since the leak current may be high enough to cause damage to the tester.**
- **Do not turn the ignition switch on during testing.**
- **Do not open the trunk during testing.**

- To locate the cause, attempt to disconnect the coupler or connector one by one to see if the current shown in the tester changes.

CHARGING OUTPUT INSPECTION

- Remove the battery cover. (See page 7-30.)
- Start the engine and raise and hold the revolutions at 5000r/min with the dimmer switch in HI position.
- Measure voltage between the battery ⊕ and ⊖ terminals.
- If the voltage measured is beyond the specified range, check the stator coil and rectifier.

Battery charging voltage: 13.5-15V at 5000r/min

NOTE:

This test must be performed with the battery fully charged.

09900-25008: Multi-circuit tester

09900-26006: Engine tachometer

Tester knob indication: Voltage (⎓)

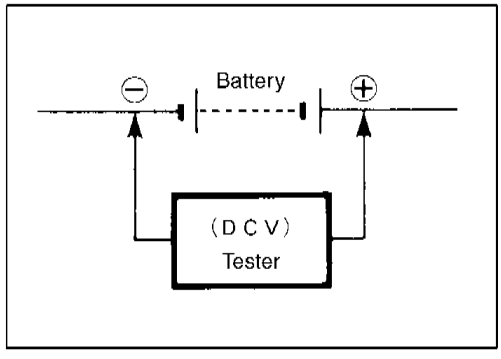

GENERATOR COIL CONTINUITY INSPECTION

- Remove the helmet box. (See page 6-1.)
- Disconnect the generator lead wire coupler ①.

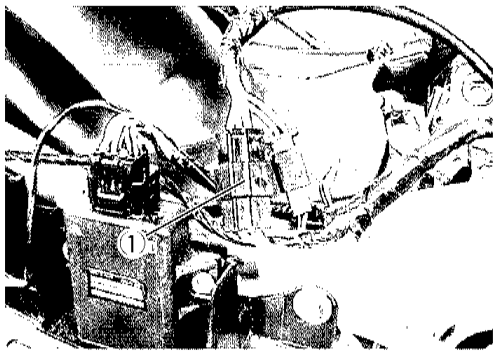

- Check that continuity exists between the terminals.
- Check that no continuity exists between the lead wire and ground.
- If there is no continuity between the terminals or there is continuity to the ground, inspect the stator coil.

09900-25008: Multi-circuit tester

Tester knob indication: Resistance (Ω)

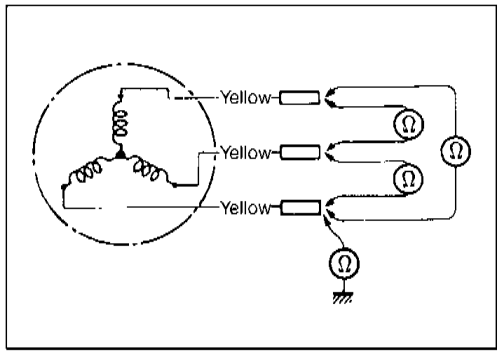

GENERATOR NO-LOAD PERFORMANCE

- Disconnect the generator lead wire coupler.
- Start the engine, raise and hold the revolutions at 5000r/min.
- Measure voltage between the terminals.
- If the voltage measured is less than the specified limit, replace the stator.

09900-25008: Multi-circuit tester

Tester knob indication: Voltage(~)

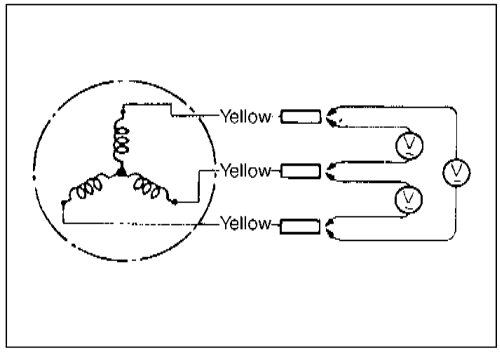

Generator no-load voltage

: More than 56V at 5000r/min (with engine cold)

REGULATOR/RECTIFIER INSPECTION

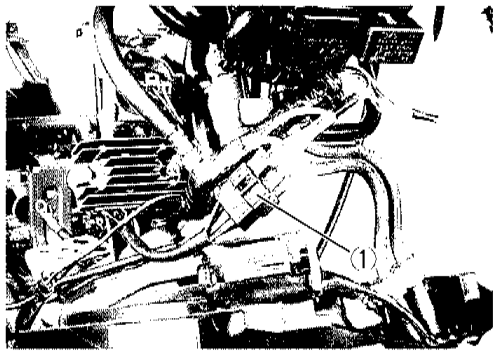

- Remove the front leg shield cover. (See page 6-1.)
- Disconnect the regulator/rectifier lead wire coupler ①.
- Measure voltage between the terminals.
- If the voltage measured is excessively out of specification, replace the regulator/rectifier.

09900-25008: Multi-circuit tester

Tester knob indication: Diode test (→|–)

unit: V

Tester probe ⊖ \ Tester probe ⊕		Y_1	Y_2	Y_3	R	B/W
	Y_1		1.5	1.5	1.5	0.4-0.7
	Y_2	1.5		1.5	1.5	0.4-0.7
	Y_3	1.5	1.5		1.5	0.4-0.7
	R	0.4-0.7	0.4-0.7	0.4-0.7		0.5-1.2
	B/W	1.5	1.5	1.5	1.5	

Above are approximate values for reference purpose.

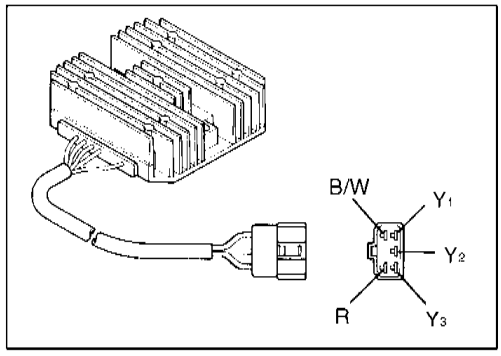

STARTER SYSTEM

TROUBLESHOOTING

NOTE:

Before troubleshooting, check the fuse and battery.

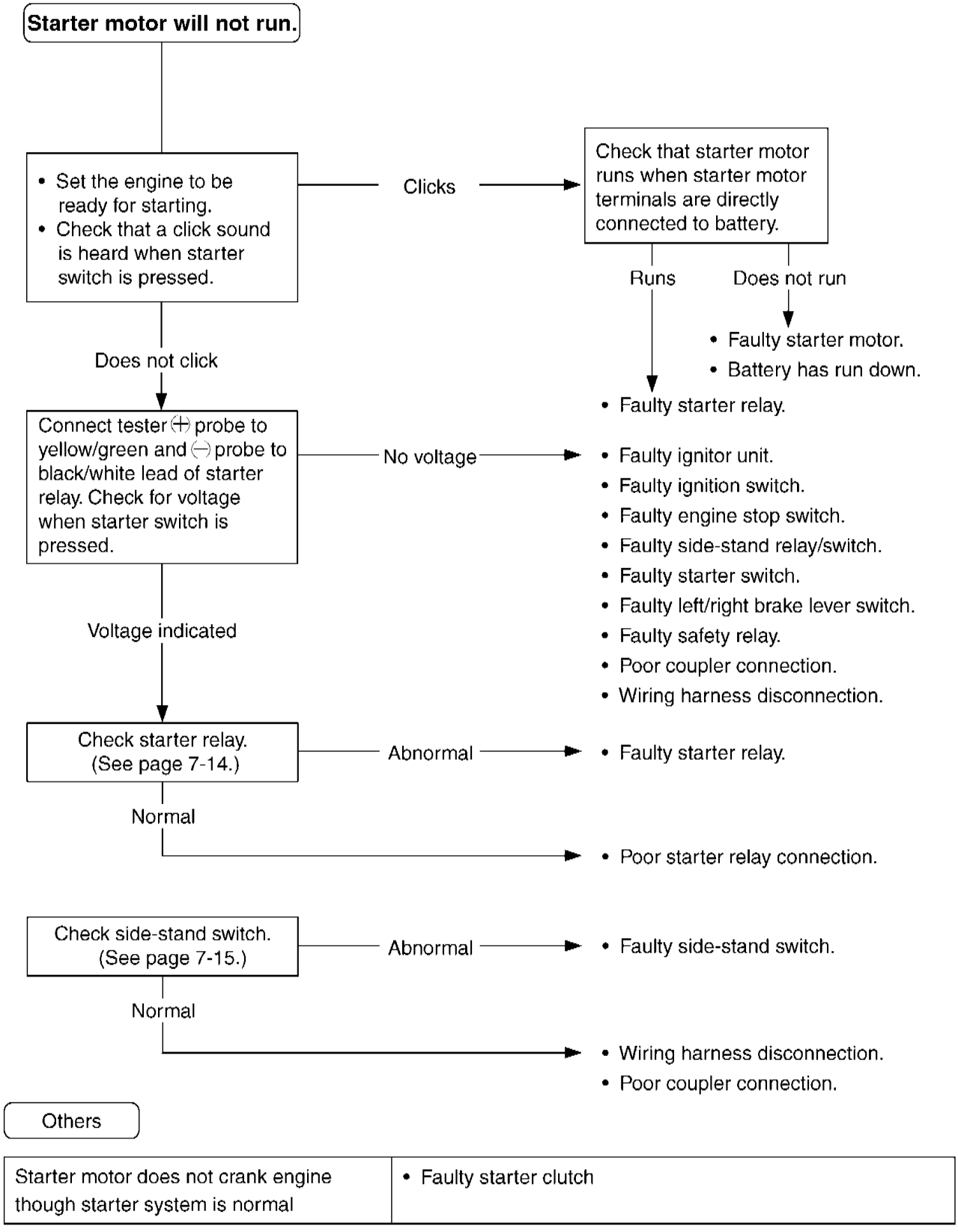

Others

Starter motor does not crank engine though starter system is normal	• Faulty starter clutch

INSPECTION (STARTER SYSTEM)

STARTER MOTOR REMOVAL

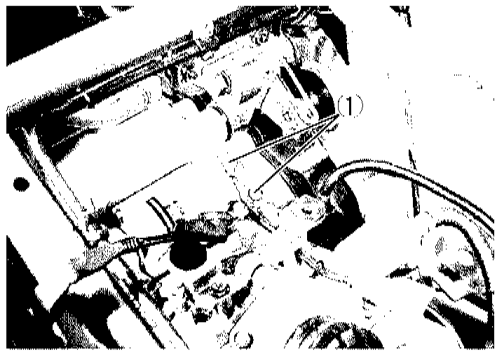

- Remove the air cleaner. (See page 2-5.)
- Remove the center, left and right frame covers. (See page 6-1.)
- Remove the starter motor mounting bolts ① and disconnect the starter lead wire.
- Remove the starter motor.

STARTER MOTOR DISASSEMBLY

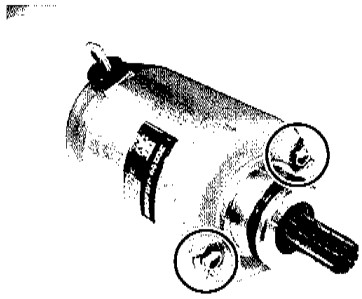

- Remove the starter motor housing bolts and disassemble the starter motor.

BRUSH INSPECTION

Check the brush for abnormal wear, crack and smoothness of movement inside the holder.
If any abnormal condition is found, replace the brush with a new one.

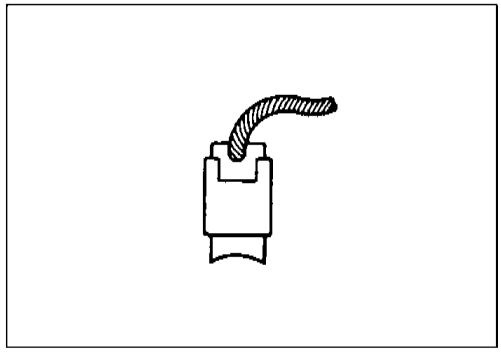

ARMATURE INSPECTION

Check the commutator surface for discoloration and abnormal wear.

If abnormal wear is noted, replace the starter motor. If discolored, polish the surface with #400 polish paper and wipe clean with a dry cloth.

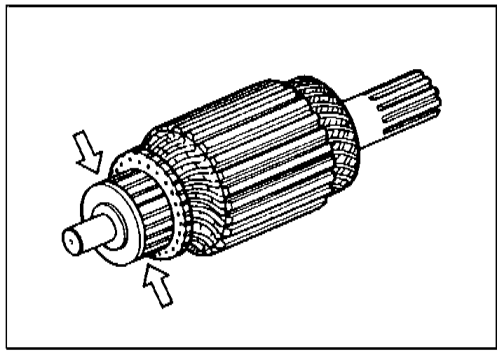

ARMATURE COIL INSPECTION

Check continuity between each segment.

Check that no segment has continuity with the armature shaft.

If there is no continuity between the segments or there is continuity between the segment and shaft, replace the starter motor.

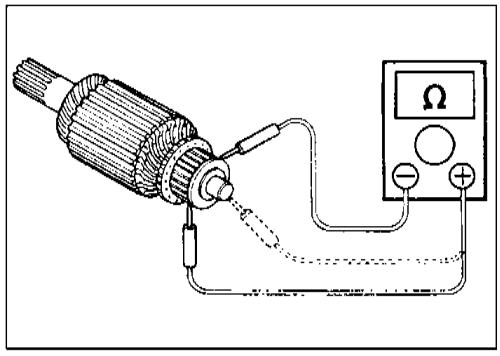

OIL SEAL INSPECTION

Check the oil seal lip for any damage. If damage is found, replace the housing end.

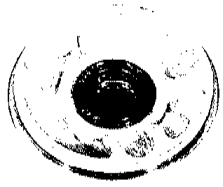

STARTER MOTOR REASSEMBLY

Reassemble the starter motor in the reverse order of disassembly procedures and observe the following points.

99000-25010: SUZUKI SUPER GREASE "A"

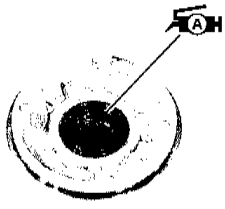

- Apply a little MOLY PASTE to the armature shaft end.

99000-25140: SUZUKI MOLY PASTE

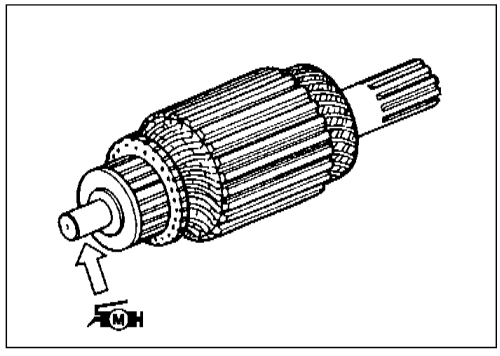

⚠CAUTION

To prevent oil or water from entering into the motor inside, the O-rings must be replaced with new ones.

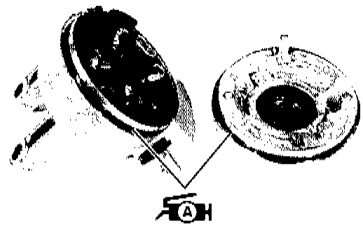

- Apply grease to the O-ring.

99000-25010: SUZUKI SUPER GREASE "A"

- Fit the washer ① to the housing end with the tab aligned with the housing end cutaway, position the shim ② and assemble the starter motor.

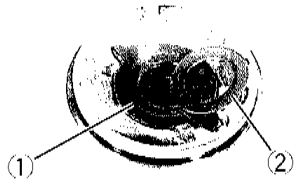

- Align the mark Ⓐ on the housing with the line Ⓑ on the housing end.

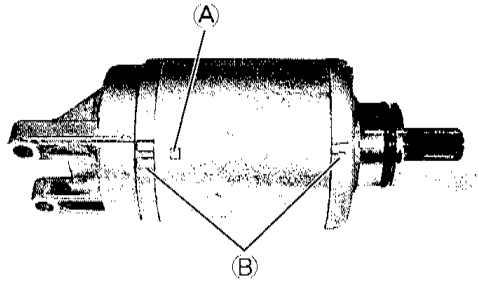

- Fit the O-rings to the starter motor housing bolts and tighten the bolts.

Starter motor housing bolt: 3.7 N · m (0.37 kg-m)

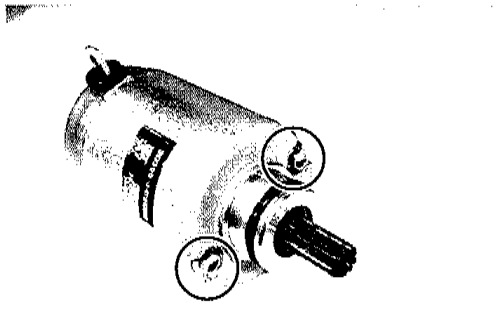

- Apply grease to the O-ring and install the starter motor.

99000-25010: SUZUKI SUPER GREASE "A"

Starter motor mounting bolt: 7 N · m (0.7 kg-m)

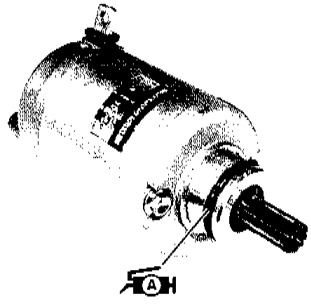

STARTER MOTOR RELAY INSPECTION

- Remove the frame cover. (See page 6-1.)
- Disconnect the battery ⊖ lead wire.
- Disconnect the starter motor relay coupler.
- Disconnect the starter motor lead wire and battery ⊕ lead wire from the starter motor relay.

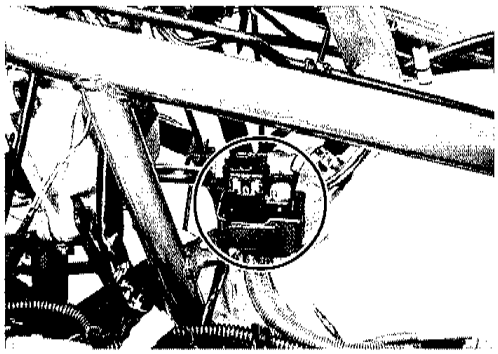

Check there is continuity between the terminals ① and ② when 12V battery voltage is applied to the terminals ③ and ④. At this time, if a click sound is heard and continuity exists, the relay coil is in normal condition.
In the case of no continuity, replace the relay.

09900-25008: Multi-circuit tester

Tester knob indication: Coutinuity test (•)))

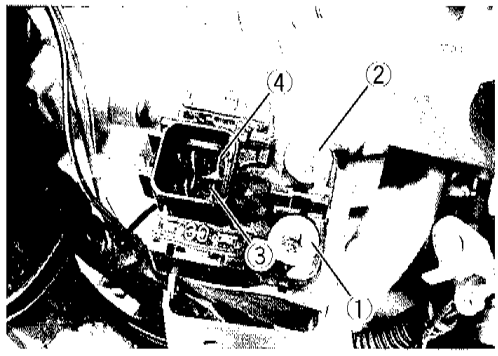

Measure resistance across the coil (between terminals ③ and ④).

09900-25008: Multi-circuit tester

Tester knob indication: Resistance (Ω)

Starter relay resistance: 1-7 Ω

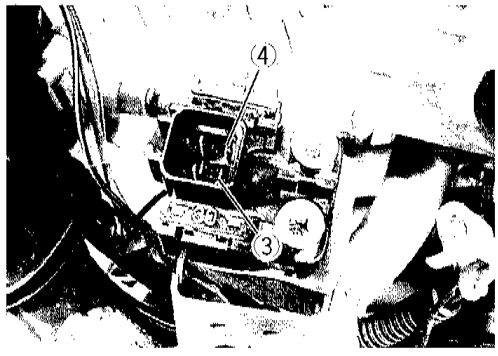

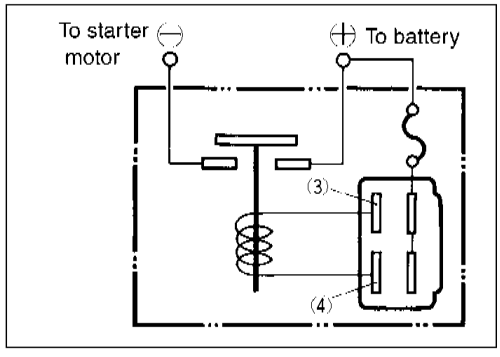

DIODE INSPECTION

- Disconnect the starter motor relay coupler.

Check the diode connected between the yellow/green and black/white leads.

09900-25008: Multi-circuit tester

Tester knob indication: Diode test (→|–)

unit: V

Tester probe ⊕	Tester probe ⊕	Yellow/Green	Black/White
	Yellow/Green		0.4-0.6
	Black/White	1.4-1.5	

SIDE-STAND SWITCH INSPECTION

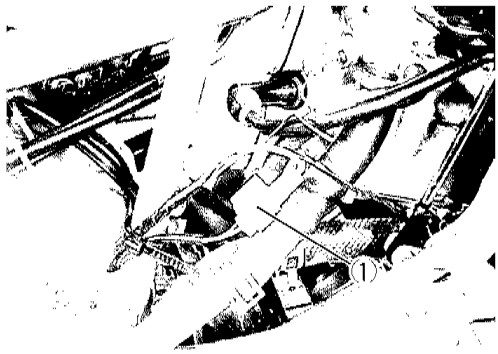

- Remove the frame cover. (See page 6-1.)
- Disconnect the side-stand switch coupler ①.

Check for continuity with the tester ⊕ probe connected to green lead and the ⊖ probe to black/white lead.

09900-25008: Multi-circuit tester

Tester knob indication: Diode test (→|–)

	Green (⊕) probe	Black/White (⊖) probe
ON (When side-stand is up)	0.4-0.6V	
OFF (When side-stand is down)	1.4-1.5V	

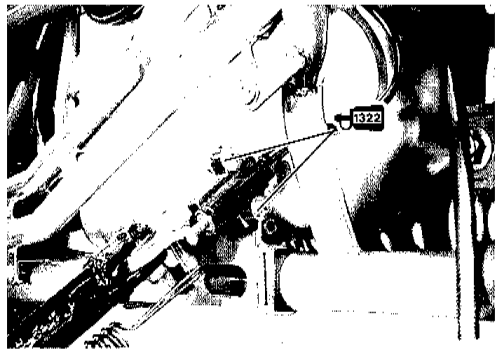

If the resistance is out of specification, replace the switch.

- When replacing the side stand switch, apply thread lock to the mounting screw threads.

99000-32110: THREAD LOCK "1322"

SAFETY RELAY INSPECTION

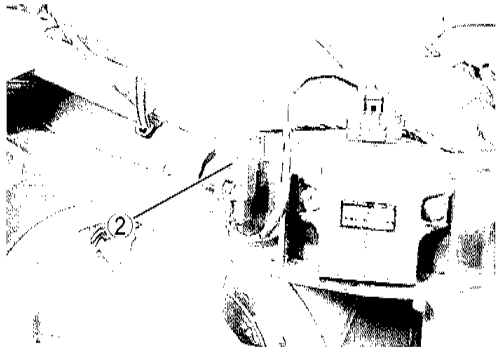

- Remove the helmet box. (See page 6-1.)
- Remove the safety relay ②.

Check that no continuity exists between the terminals ③ and ④. If continuity is found, replace the relay.

09900-25008: Multi-circuit tester

Tester knob indication: Continuity test (•)))

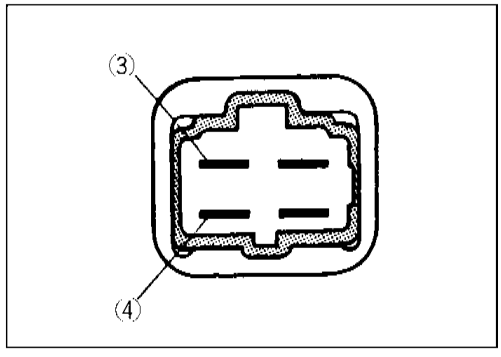

Check there is continuity between the terminals ③ and ④ when 12V battery voltage is applied; positive to the terminal ⑤ and negative to the terminal ⑥. If no continuity is noted, the relay must be replaced.

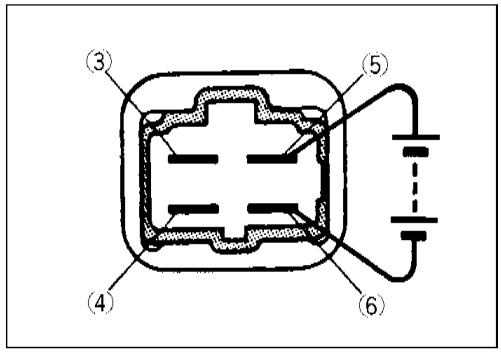

TURN SIGNAL RELAY/SIDE-STAND RELAY REMOVAL

- Remove the front leg shield cover. (See page 6-1.)
- Remove the turn signal relay/side-stand relay ①.

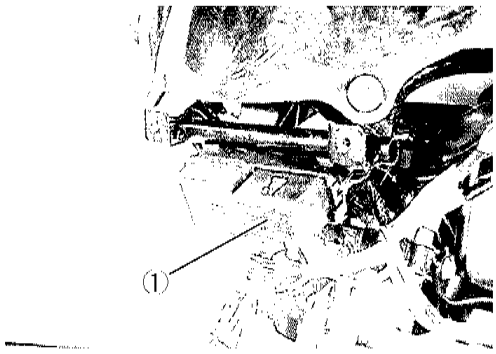

SIDE-STAND RELAY INSPECTION

Check that no continuity exists between the terminals Ⓓ and Ⓖ of turn signal relay. If continuity is found, replace the relay.

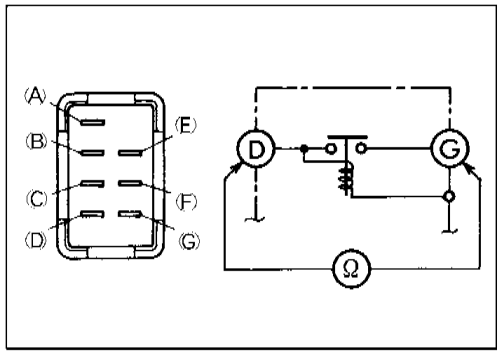

Check there is continuity between the terminals Ⓓ and Ⓖ when 12V battery voltage is applied; positive to the terminal Ⓓ and negative to the terminal Ⓒ. If no continuity is noted, the relay must be replaced.

09900-25008: Multi-circuit tester

Tester knob indication: Continuity test (•)))

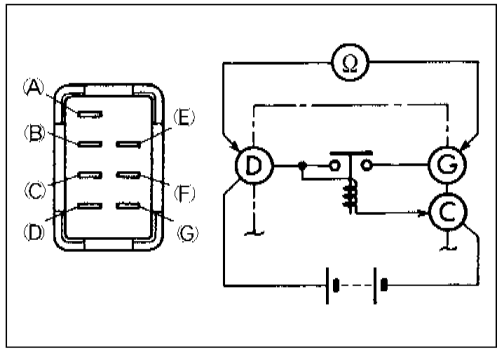

TURN SIGNAL RELAY INSPECTION

If the turn signal light does not light, inspection the bulb, turn signal switch and circuit connection.

If the bulb, turn signal switch and circuit connection checked are all right, the turn signal relay may be faulty, replace it with a new one.

NOTE:

Be sure that the battery used is in fully-charged condition.

IGNITION SYSTEM

TROUBLESHOOTING

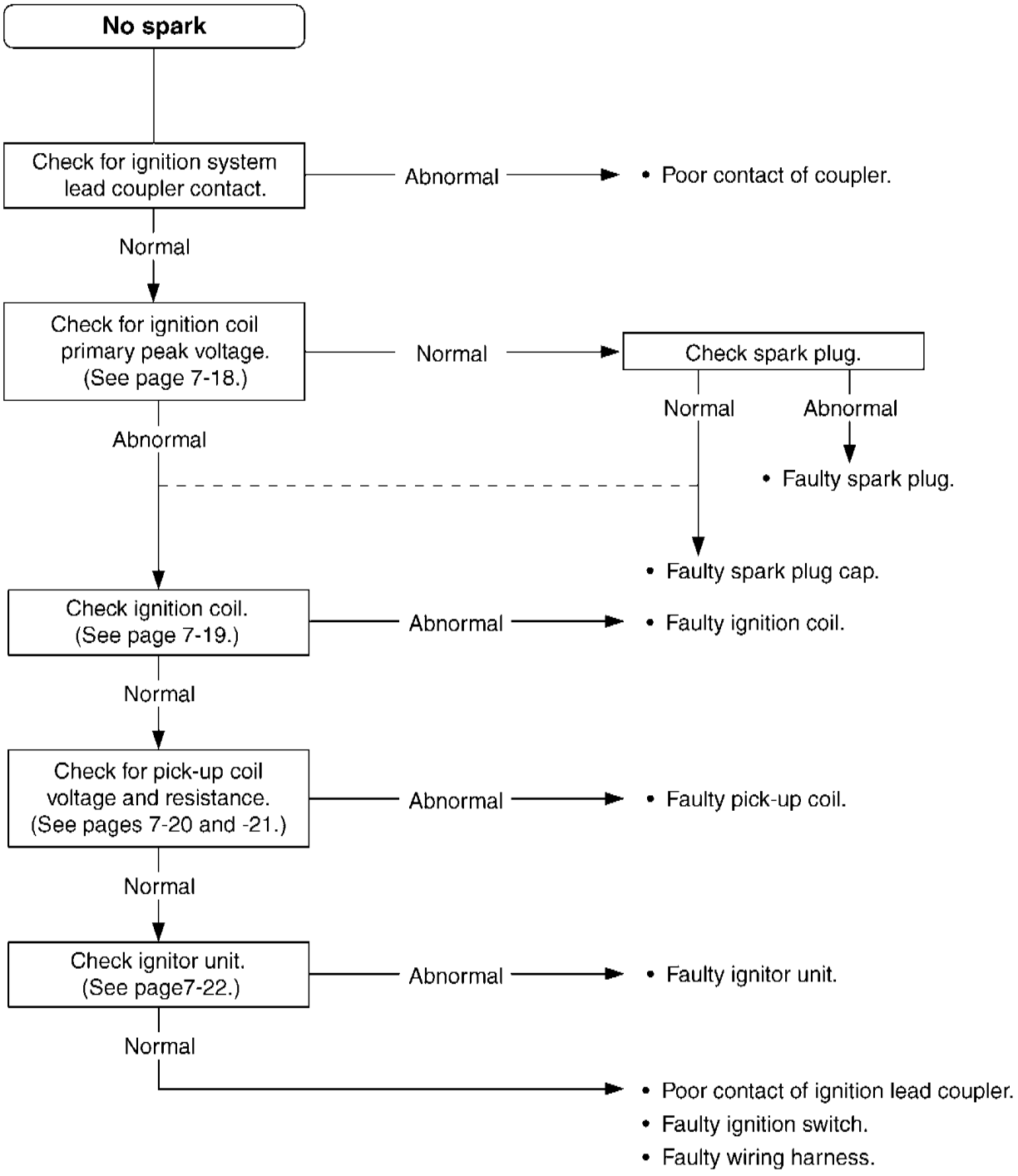

INSPECTION (IGNITION SYSTEM)

IGNITION COIL PRIMARY PEAK VOLTAGE

- Remove the frame cover. (See page 6-1.)
- Disconnect the spark plug cap.

NOTE:

** Check that all the couplers are connected.*

** Check that the battery is fully charged.*

Measure the ignition coil primary peak voltage in the following procedures.

- With the spark plug cap connected, place a new spark plug on the chassis or engine to ground it.

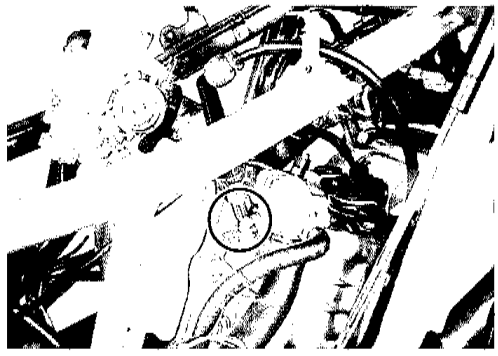

- Fit the peak volt adapter to Multi-circuit tester and connect the tester as follows.

  Ignition coil: ⊕ probe → White

  ⊖ probe → Engine ground

  TOOL 09900-25008: Multi-circuit tester

  Tester knob indication: Voltage (⎓)

- Crank the engine for a few seconds by pressing the starter button and measure ignition coil primary peak voltage.
- Repeat the above procedure a few times and measure the highest ignition coil primary peak voltage.

Ignition coil primary peak voltage: More than 200V
(With fully charged battery)

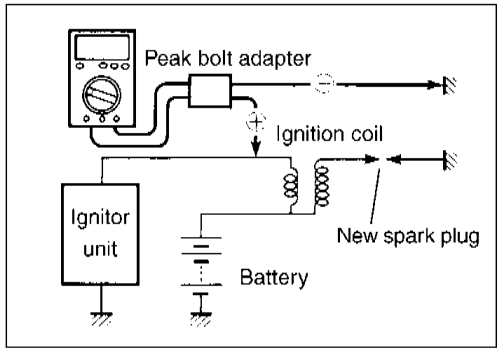

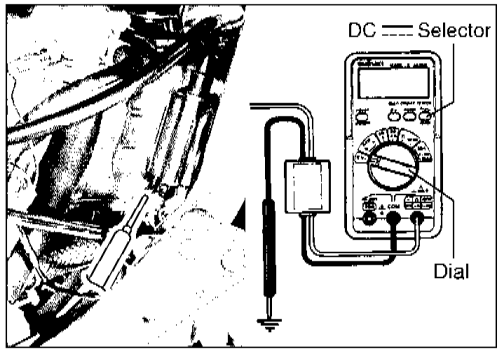

⚠CAUTION

To prevent electric shock, avoid contacting the spark plug or tester probe.

NOTE:

If voltage is less than the specification, inspect the ignition coil, pick-up coil and ignitor unit.

IGNITION COIL INSPECTION (USING ELECTRO-TESTER)

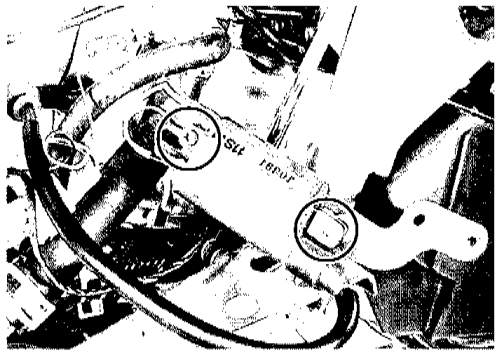

- Remove the frame cover. (See page 6-1.)
- Remove the ignition coil. (See page 3-7.)

Check for any damage on the high tension cord, its connection and ignition coil.

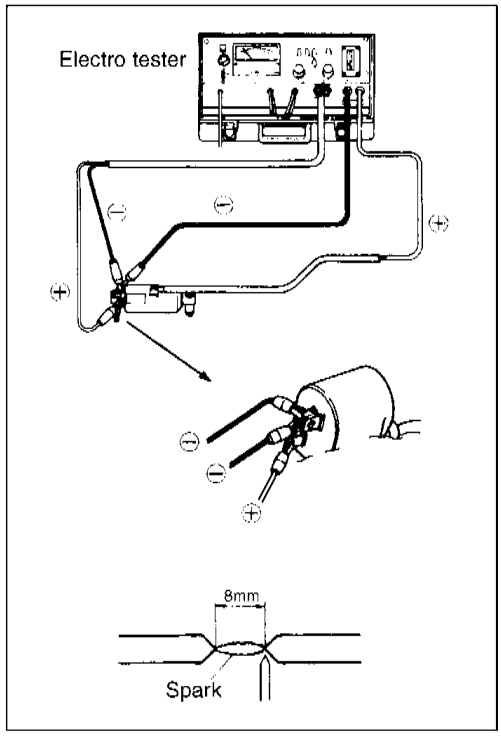

Check that the 3-prong gap is set to 8mm.
Connect the tester as shown.
(⊕ → Orange/white, ⊖ → White)
If, in this test, spark is not produced or is weak and reddish, replace the ignition coil.

TOOL 09900-28107: Electro-tester

⚠WARNING

- **Use caution not to cause external electrical leak.**
- **During testing spark performance, avoid contacting the metal part of the 3-prong gap to prevent electric shock.**

⚠CAUTION

Handle the electro-tester in accordance with the instructions supplied with the tester.

IGNITION COIL INSPECTION (USING MULTI-CIRCUIT TESTER)

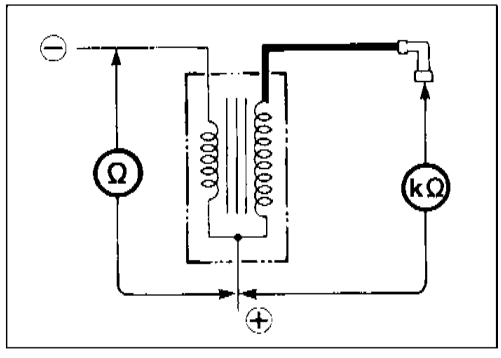

- Remove the ignition coil. (See page 3-7.)

Measure resistance between the primary coil terminals.
Measure resistance between the positive primary coil terminal and spark plug cap.

TOOL Multi-circuit tester: 09900-25008

Tester knob indication: Resistance(Ω)

Ignition coil resistance
Primary: 3-5 Ω
Secondary coil: 17-30 k Ω

PICK-UP COIL INSPECTION (USING MULTI-CIRCUIT TESTER)

- Remove the helmet box. (See page 6-1.)
- Disconnect the ignitor unit coupler ①.
- Remove the spark plug.

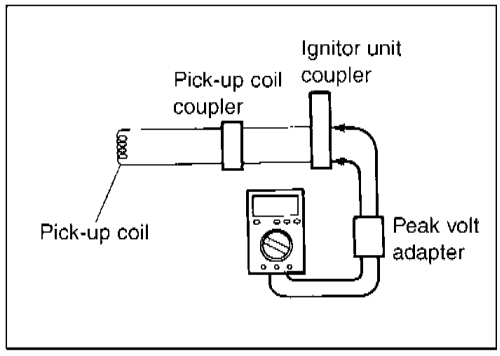

- With the peak volt adapter fitted, connect the multi-circuit tester to the coupler.

Connection: ⊕ probe → Black/white, ⊖ probe → Blue

TOOL 09900-25008: Multi-circuit tester

- Crank the engine for a few seconds by pressing the starter button and measure the peak voltage of the pick-up coil.

Tester knob indication: Voltage (⎓)

Pick-up coil peak voltage: More than 2.4V
(With fully charged battery)

NOTE:
If the measurement is out of specification, perform the same inspection at the pick-up coil coupler.

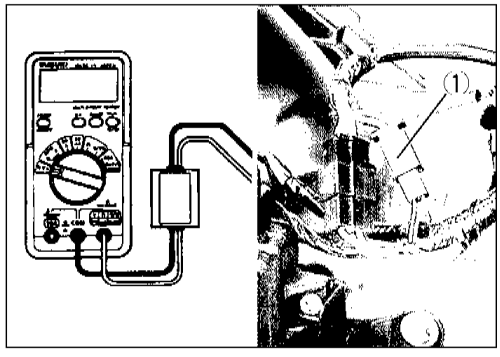

- Remove the helmet box. (See page 6-1.)
- Disconnect the pick-up coil coupler ①.

Measure the pick-up coil peak voltage.

Connection: ⊕ probe → Green, ⊖ probe → Blue

NOTE:
If the voltage is at the specification, the probable cause will be faulty wiring harness between pick-up coil and ignitor unit couplers. If the voltage is out of specification, replace the pick-up coil or redo the inspection.

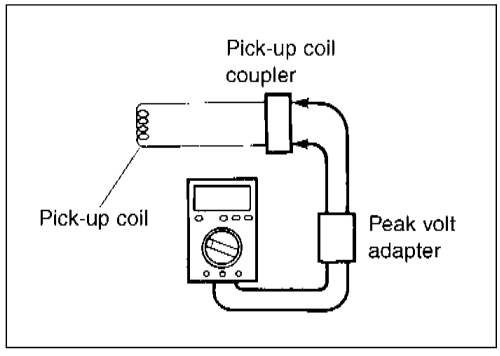

PICK-UP COIL RESISTANCE INSPECTION

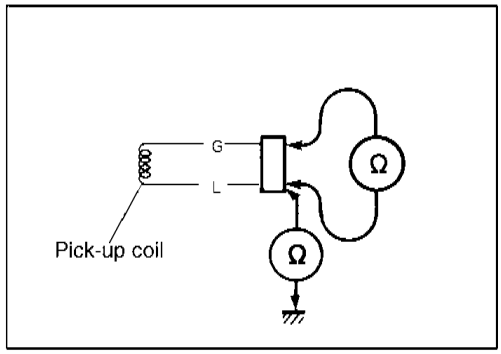

- Remove the helmet box. (See page 6-1.)
- Disconnect the pick-up coil lead wire coupler.

Measure resistance between the lead wires (Blue ↔ Green)
If the resistance measured is out of specification, replace the pick-up coil.

09900-25008: Multi-circuit tester

Tester knob indication: Voltage (⎓)

Pick up coil resistance: 184-276 Ω

Check that no continuity exists between the lead wires and ground. If continuity exists, replace the pick-up coil.

IGNITOR UNIT INSPECTION (USING MULTI-CIRCUIT TESTER)

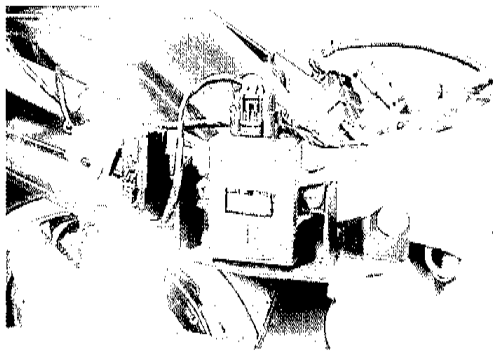

- Remove the helmet box. (See page 6-1.)

Use Multi-circuit tester to measure voltage between the terminals.

09900-25008: Multi-circuit tester

Tester knob indication: Diode test (→|–)

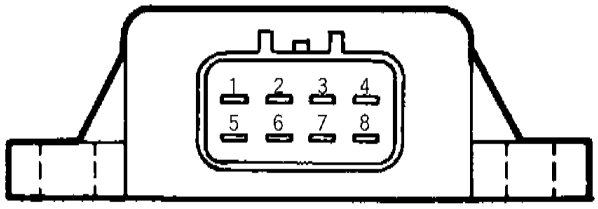

unit: V

	Tester ⊕ probe							
Tester ⊖ probe	1	2	3	4	5	6	7	8
1		1.0 - 1.5	1.0 - 1.5	Approx.1.5	Approx.1.5	1.0 - 1.5	1.0 - 1.5	1.0 - 1.5
2	1.0 - 1.5		0.6 - 1.0	Approx.1.5	Approx.1.5	0.7 - 1.3	0.3 - 0.8	0.6 - 1.1
3	1.0 - 1.5	0.7 - 1.0		Approx.1.5	Approx.1.5	0.6 - 1.1	0.4 - 0.9	0 - 0.5
4	1.0 - 1.5	0.9 - 1.3	0.5 - 1.0		Approx.1.5	0.7 - 1.2	0.2 - 0.7	0.4 - 0.9
5	1.0 - 1.5	1.0 - 1.5	0.8 - 1.2	Approx.1.5		0.7 - 1.3	0.4 - 0.9	0.7 - 1.2
6	1.0 - 1.5	0.9 - 1.3	0.6 - 1.0	Approx.1.5	Approx.1.5		0.4 - 0.9	0.6 - 1.1
7	1.0 - 1.5	0.7 - 1.3	0.4 - 0.9	Approx.1.5	Approx.1.5	0.4 - 0.9		0.3 - 0.8
8	1.0 - 1.5	0.5 - 1.0	0 - 0.5	Approx.1.5	Approx.1.5	0.6 - 1.1	0.3 - 0.8	

SPEEDOMETER

REMOVAL AND DISASSEMBLY

- For removal procedure, refer to page 6-1.
- Remove the screw and disassemble the speedometer assembly.
- Remove the bulbs.

INSPECTION

WATER TEMPERATURE GAUGE INSPECTION

- For the inspection procedure, refer to page 5-7.
- Remove the frame cover. (See page 6-1.)
- Disconnect the water temperature gauge terminal ①.

With the ignition switch turned on and a variable resister connected between the black/green lead and ground, check for the water temperature gauge needle indication when the resistance is adjusted to the specified values.
If the indication excessively deviates from the standard value, replace the water temperature gauge.

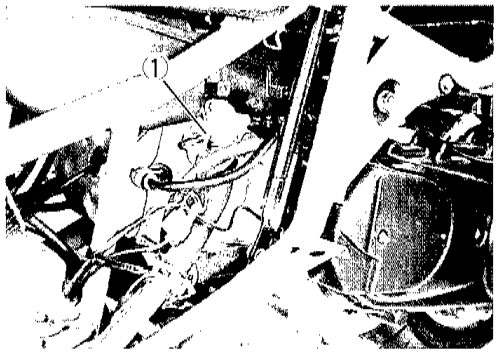

Water temperature gauge needle indication			
Resistance Ω	Approx. 152 Ω	Approx. 39 Ω	Approx. 18 Ω
Needle position	①	②	③

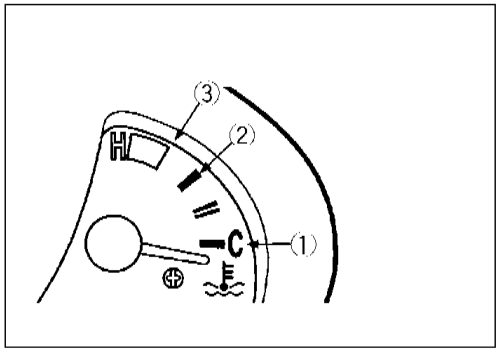

SPEED SENSOR INSPECTION

- Disconnect the speed sensor coupler.
- Connect four 1.5V dry cells, 1k Ω resistance and the tester to the speed sensor lead coupler as shown.

09900-25008: Multi-circuit tester

Tester knob indication: Voltage (⎓)

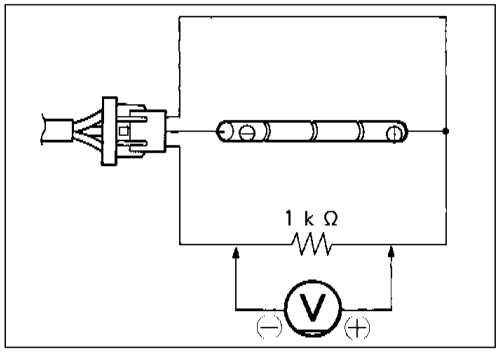

Lift and turn the front wheel and check that voltage varies between 0-6V.
If any abnormal condition is noted, replace the sensor.

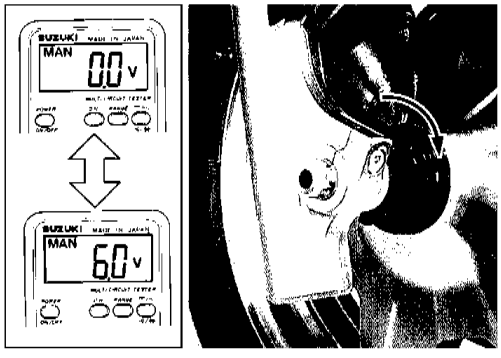

FUEL LEVEL METER INSPECTION

- Remove the rear leg shield. (See page 6-1.)
- Disconnect the fuel level gauge coupler. (See page 4-3.)

Check that the fuel level meter moves properly when the resistor Ⓐ is connected between the fuel level gauge coupler terminals.

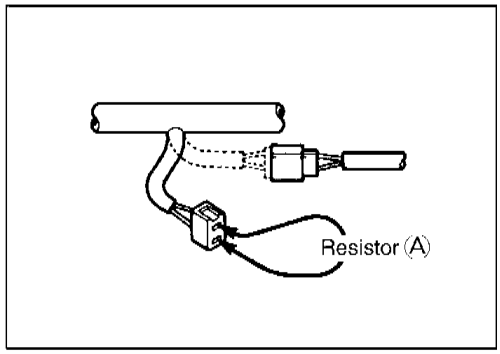

NOTE:

- *Prior to this inspection, check that the fuel gauge is func tioning properly.*
- *When reading the meter indication, wait at least for 20 seconds after the resistor has been connected.*

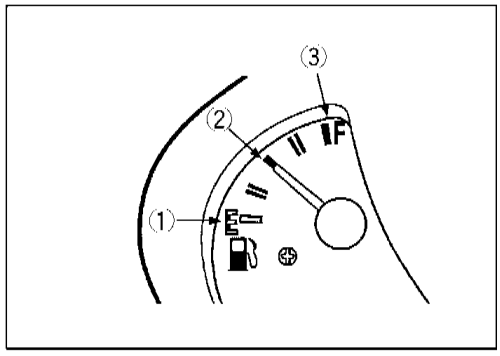

Resistor Ⓐ	Meter indication
Approx. 103 Ω	①
Approx. 32.5 Ω	②
Approx. 5 Ω	③

LAMPS

HEADLIGHT

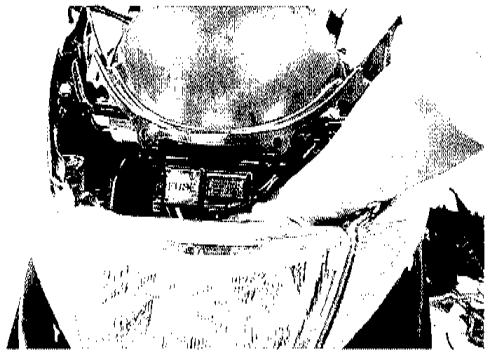

BULB REPLACEMENT

- Remove the front leg shield cover. (See page 6-1.)

NOTE:

To facilitate the operation, move the wiring harnesses on the back of headlight.

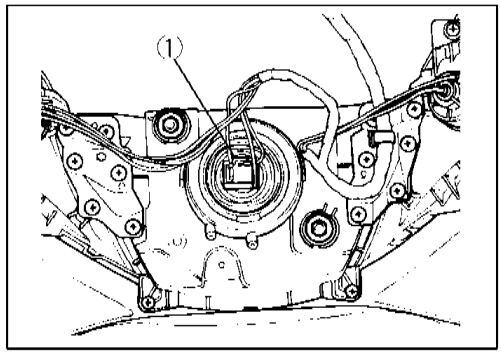

- Remove the headlight bulb socket ① and rubber boot, then remove the headlight bulb.

- Reassemble the headlight in the reverse order of the above.

⚠WARNING

The headlight uses a halogen bulb which operates at a high temperature. Therefore, handle the bulb after sufficiently cooled.

⚠CAUTION

- **A fouled glass can cause damage to the bulb when lit. If the bulb is contacted with bare hand, wipe clean with a cloth damped with alcohol or detergent.**
- **Do not use the bulb of a wattage other than specification.**
- **When installing the rubber boot, turn its "TOP" mark pointing upward.**

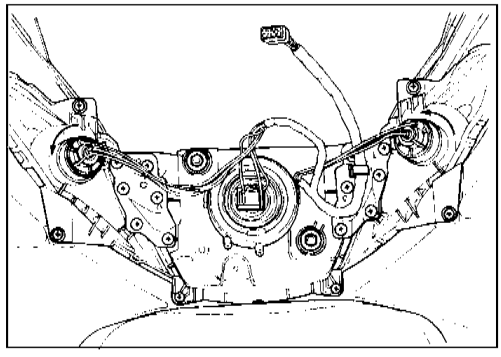

FRONT TURN SIGNAL LIGHT

BULB REPLACEMENT

- Similar to the headlight replacement procedure, remove the front leg shield cover.
- Turn the light socket and remove the front turn signal light bulb.

REAR COMBINATION LIGHT / REAR TURN SIGNAL LIGHT

BULB REPLACEMENT

- Loosen the screws.
- Remove the rear combination light lens and rear turn signal light lenses (2 pcs).

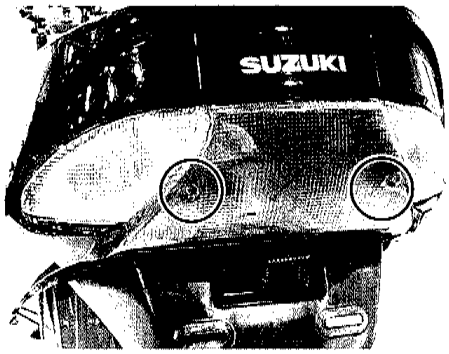

- Remove the rear combination light bulbs①and rear turn signal light bulbs②.
- To reassemble, reverse the above sequence.

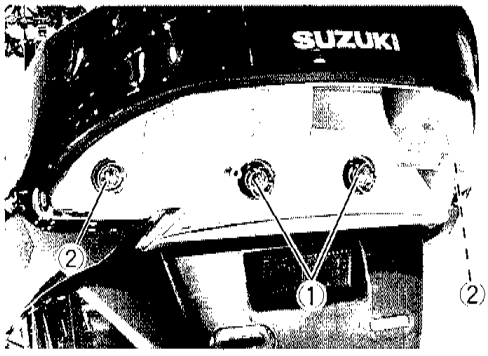

SWITCHES

IGNITION SWITCH REMOVAL

- Remove the front box. (See page 6-1.)
- Disconnect the coupler.
- Loosen the bolt①, nut②and Torx bolt③.

TOOL 09930-11930: Torx bit (JT30H)
09930-11940: Bit holder

Bolt, nut: 10 N · m (1.0 kg-m)

NOTE:

For removal procedure of ignition switch shutter, refer to "FRONT BOX REMOVAL" (page 6-1.)

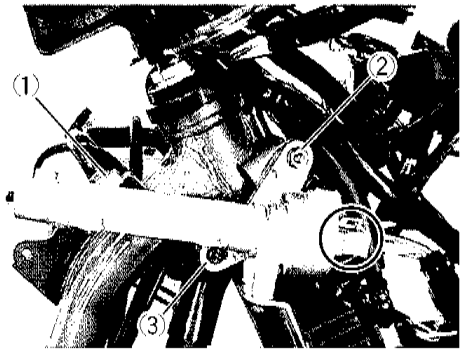

SWITCH INSPECTION

Check for continuity between each terminal.

If any abnormal condition is noted, replace the switch.

TOOL 099900-25008: Multi-circuit tester

IGNITION SWITCH

Position \ Color	R	O	O/R	B/W	Gr	Br
ON	○——	——○	○——	——○	○——	——○
OFF						
LOCK						
P	○——	——	——	——	——	——○

DIMMER SWITCH

Position \ Color	W	Y	Y/W
HI (≡○)		○——	——○
LO (≡0)	○——	——	——○

PASSING LIGHT SWITCH

Position \ Color	O/R	Y
·		
PUSH	○——	——○

ENGINE STOP SWITCH

Position \ Color	O/B	O/W
OFF (⊗)		
RUN (○)	○——	——○

STARTER BUTTON

Position \ Color	O/W	Y/G
·		
PUSH (⚡)	○——	——○

TRUNK BOX LIGHT SWITCH

Position \ Color	R	B/W
·	○——	——○
PUSH		

HORN BUTTON

Position \ Color	B/Bl	B/W
·		
PUSH	○——	——○

FRONT BRAKE SWITCH

Position \ Color	B/Bl	B/R
OFF		
ON	○——	——○

REAR BRAKE SWITCH

Position \ Color	B/R	B/G
OFF		
ON	○——	——○

BRAKE-LOCK SWITCH

Position \ Color	O/G	V
ON	○——	——○
OFF		

LIGHTING SWITCH

Position \ Color	O/Bl	Gr	O/R	Y/W
OFF (●)				
(≡D ⊂≡)	○——	——○		
ON (☼)	○——	——○	○——	——○

TURN SIGNAL SWITCH

Position \ Color	Lg	Lbl	B
L (⇦)		○——	——○
PUSH			
R (⇨)	○——	——○	

WIRE COLOR

B	: Black	Lbl	: Light blue	R	: Red
Br	: Brown	Lg	: Light green	Y	: Yellow
Gr	: Gray	O	: Orange	W	: White
B/Bl	: Black with Blue tracer			V	: Violet
B/R	: Black with Red tracer			O/G	: Orange with Green tracer
B/Y	: Black with Yellow tracer			O/R	: Orange with Red tracer
B/W	: Black with White tracer			O/W	: Orange with White tracer
G/Y	: Green with Yellow tracer			W/B	: White with Green tracer
O/B	: Orange with Black tracer			Y/G	: Yellow with Green tracer
O/Bl	: Orange with Blue tracer			Y/W	: Yellow with White tracer

BATTERY

CONSTRUCTION

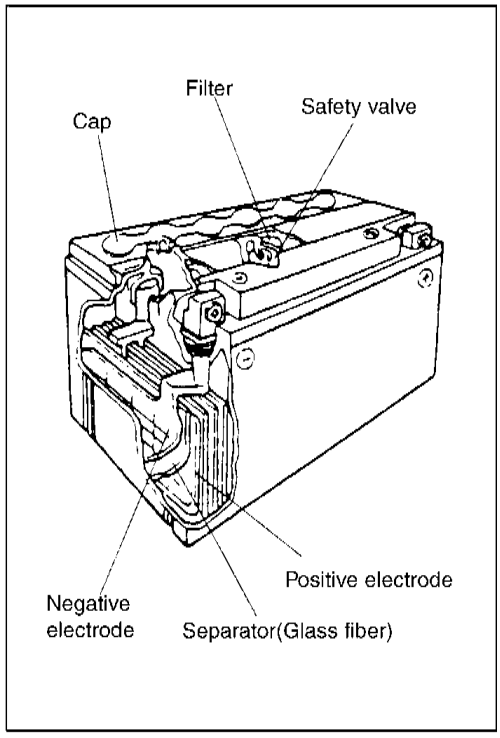

This motorcycle uses an MF (Maintenance Free) battery. As shown in the right illustration, the battery consists of electrodes, separators, safety valve, filter, etc. Fine glass fiber is used for constructing the separator which holds electrolyte inside.

When a discharged conventional open type battery is recharged fully, lead sulfate turns to lead dioxide and sponge-like lead. If recharging is further continued, charging current is consumed for electrolytic action producing oxygen gas from the positive and hydrogen gas from the negative electrodes. This causes electrolyte to be lost thereby requiring addition of water.

In an MF battery, however, no water loss is caused. In this battery, the negative electrode is designed not to fully turn to lead (sponge-like lead) even under fully charged condition. For this reason, the negative electrode remains always in non-complete charged condition producing no hydrogen gas. Oxygen gasses produced at the positive electrode will immediately react with an active material (lead) at the negative electrode to turn back to water, thus preventing water from losing.

PRECAUTION WHEN HANDLING BATTERY ELECTROLYTE

- Take utmost care so as not to cause battery acid to contact a person and the vehicle.
- If battery acid has contacted the skin, clothes or vehicle, immediately flush with plenty of water. If battery acid remains contacted, burns of skin, damage to clothes, peeling or discoloration of paint will occur.
- Should battery acid gets in eyes, immediately flush with plenty of water and call physician.

ELECTROLYTE FILLING

⚠CAUTION

Make sure to use electrolyte specified for each battery type.

Using electrolyte designed for other battery type can cause electrolyte leak, performance deterioration or shortened life.

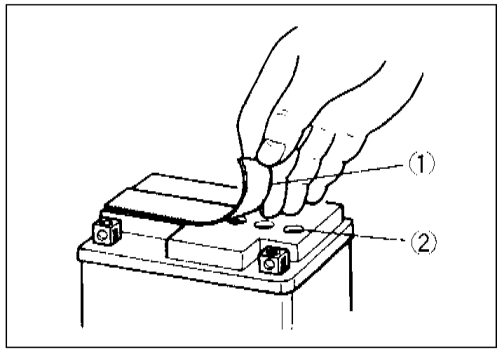

- Remove the aluminum tape ① sealing the battery electrolyte filler holes ②.
- Remove the cap ③ from the electrolyte container.

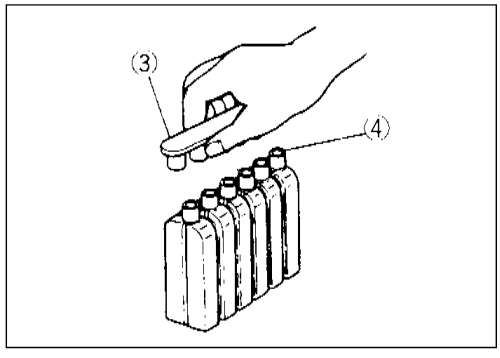

⚠CAUTION

- **Handle the removed cap carefully after filling electrolyte as the cap is reused for sealing the battery filler holes.**
- **Do not remove or pierce the sealed areas ④ of the electrolyte container.**

- Insert the nozzles of the electrolyte container into the battery's electrolyte filler holes, holding the container securely.

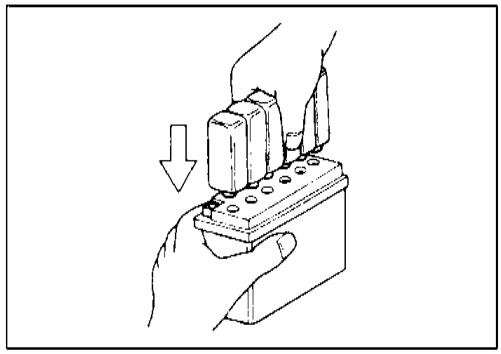

⚠CAUTION

- **Take precaution not to allow any of the fluid to spill.**
- **Insert the nozzles squarely to the battery.**

- Check that air bubbles are coming up from each electrolyte container and leave in this position for more than 20 minutes.

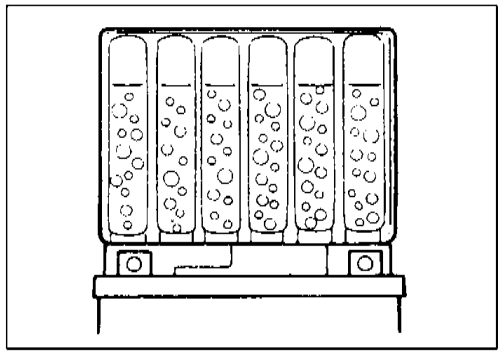

NOTE:

If no air bubbles are coming up from the filler port, tap the bottom of the container two or three times.

Never remove the container from the battery.

⚠CAUTION

Make sure to fill all the amount of electrolyte into the battery.

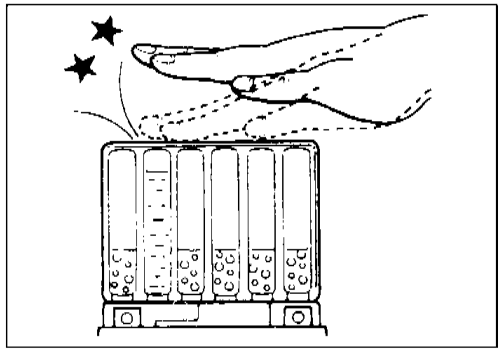

It is important to check all the cells are filled with electrolyte completely because insufficient filling of electrolyte in even one cell will result in deteriorated performance and shortened life.

INSERTING CAP (SEALING PLUG)

⚠CAUTION

Fit the cap securely.

To install the cap, temporarily fit the cap to all the cells lightly, thereafter press the cap little by little into each filler hole evenly and horizontally.

Inserting the cap at once in one cell and then in the next cell will cause the cap to deform resulting in poor sealing.

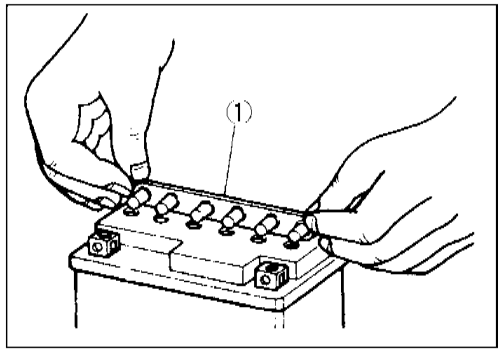

⚠CAUTION

- **Wipe completely if the filler hole is wet with electrolyte.**
- **Do not remove the caps once it has been installed to the battery.**

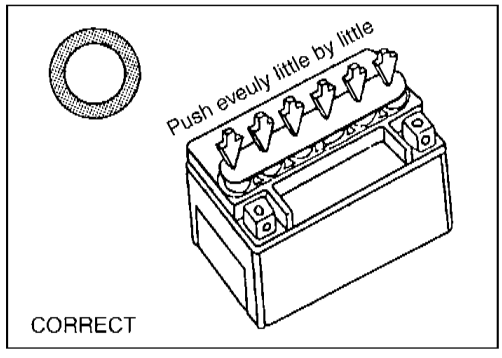

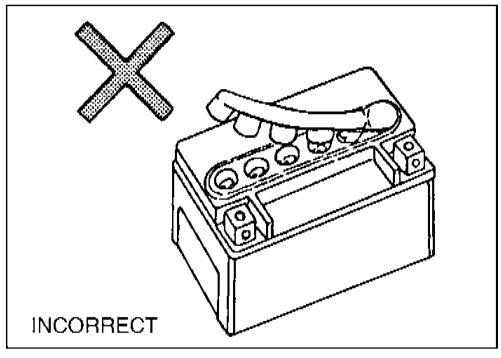

PRECAUTION FOR HANDLING BATTERY

The battery produces combustible gasses and therefore can explode if handled improperly. Use caution for the following in addition to general service precautions.

- Never allow the battery to short-circuit. Keep away from sparks and fire.
- Charging of the battery must be operated in an open and well ventilated area and never operate in an closed indoor.

- Using SUZUKI pocket tester, measure the battery terminal voltage. The tester should indicate more than 12.5 - 12.6V. If the battery voltage is lower than the specification, recharge the battery with a battery charger in accordance with the following instructions.

NOTE:

Initial charging of a new battery is recommended if two years or longer have elapsed since the date of manufacture.

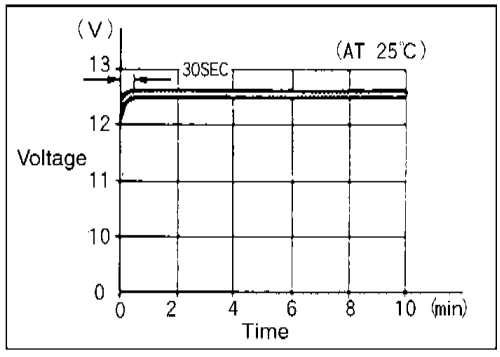

RECHARGING

- Using the pocket tester, check the battery voltage. If the voltage reading is less than the 12.0V, recharge the battery with a battery charger.
- When recharging the battery, remove the battery from the motorcycle.
- Practice the standard charging unless otherwise necessary.

Recharging	
Standard	0.7A × 5-10 hours
Quick	3A × 1 hour

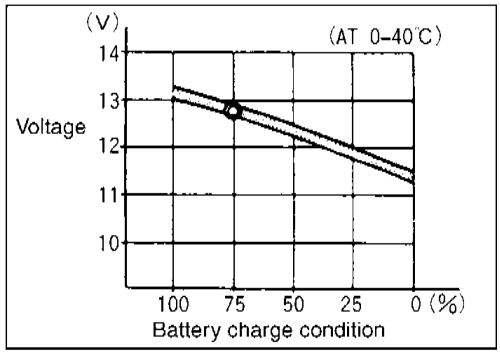

- After recharging, wait for more than 30 minutes and check the battery voltage with a pocket tester.
- If the battery voltage is less than the 12.5V, recharge the battery again in the same condition. If battery voltage is still less than 12.5V after recharging, replace the battery with a new one.

NOTE:

When the motorcycle is not used for a long period, check the battery every 1 month to prevent the battery from deterioration.

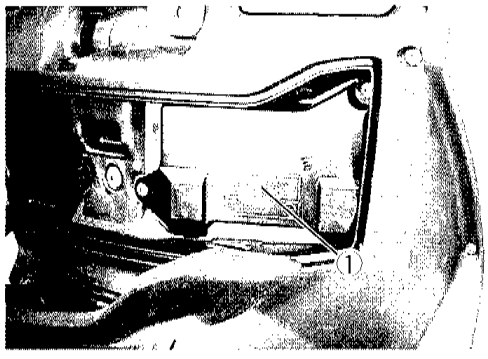

⚠CAUTION

The charging system on this model is designed for MF battery and therefore do not use a battery of other specification.

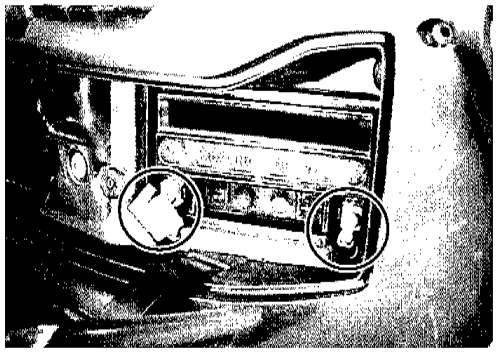

BATTERY REMOVAL

1. Open the front trunk. 2. Remove the battery cover ①.
3. Disconnect the battery ⊖ lead first.
4. Disconnect the battery ⊕ lead. 5. Remove the battery.

SERVICING INFORMATION

CONTENTS

TROUBLESHOOTING

ENGINE

Complaint	Symptom and possible causes	Remedy
Engine will not start, or is hard to start.	**Compression too low**	
	1. Out of adjustment valve clearance.	Adjust.
	2. Worn valve guides or poor seating of valves.	Repair or replace.
	3. Mistiming valves.	Adjust.
	4. Excessively worn piston rings.	Replace.
	5. Worn-down cylinder bore.	Replace or rebore.
	6. Too slowly starter motor cranks.	See electrical section.
	7. Poor seating of spark plug.	Retighten.
	Plugs not sparking	
	1. Fouled spark plug.	Clean.
	2. Wet spark plug.	Clean and dry.
	3. Defective ignition coil.	Replace.
	4. Open or short in high-tension cord.	Replace.
	5. Defective pick-up coil or ignitor unit.	Replace.
	No fuel reaching the carburetor	
	1. Clogged hole in the fuel tank cap.	Clean or replace.
	2. Clogged or defective fuel tank pressure control valve.	Clean or replace.
	3. Defective carburetor needle valve.	Replace.
	4. Clogged fuel hose or fuel filter.	Clean or replace.
Engine stalls easily.	1. Fouled spark plug.	Clean.
	2. Defective to pick-up coil or ignitor unit.	Replace.
	3. Clogged fuel hose or fuel tank cap.	Clean or replace.
	4. Clogged jets in carburetor.	Clean.
	5. Out of adjustment valve clearance.	Adjust.
Noisy engine.	**Excessive valve chatter**	
	1. Too large valve clearance.	Adjust.
	2. Weakened or broken valve springs.	Replace.
	3. Worn rocker arm or cam surface.	Replace.
	4. Worn and burnt camshaft journal.	Replace.
	Noise seems to come from piston	
	1. Worn down piston or cylinder.	Replace.
	2. Fouled with carbon combustion chamber.	Clean.
	3. Worn piston pin or piston pin bore.	Replace.
	4. Worn piston rings or ring grooves.	Replace.
	Noise seems to come from timing chain	
	1. Stretched chain.	Replace.
	2. Worn sprockets.	Replace.
	3. Not working tension adjuster.	Repair or replace.
	Noise seems to come from clutch	
	1. Worn or slipping drive belt.	Replace.
	2. Worn rollers in the movable drive face.	Replace.
	Noise seems to come from crankshaft	
	1. Due to wear rattling bearings.	Replace.
	2. Worn and burnt big-end bearing.	Replace.
	3. Worn and burnt journal bearings.	Replace.
	4. Too large thrust clearance.	Replace.

Complaint	Symptom and possible causes	Remedy
Noisy engine.	**Noise seems to come from transmission**	
	1. Worn or rubbing gears.	Replace.
	2. Badly worn splines.	Replace.
	3. Badly worn bearings.	Replace.
Slipping clutch.	1. Worn or damaged clutch shoes	Replace.
	2. Weakened clutch shoe springs.	Replace.
	3. Worn clutch housing.	Replace.
	4. Worn or slipping drive belt.	Replace.
Engine idles poorly.	1. Out of adjustment valve clearance.	Adjust.
	2. Poor seating of valves.	Replace or repair.
	3. Defective valve guides.	Replace.
	4. Worn rocker arm or cam surface.	Replace.
	5. Too wide spark plug gap.	Adjust or replace.
	6. Defective ignition coil.	Replace.
	7. Defective pick-up coil or ignitor unit.	Replace.
	8. Out of adjustment in carburetor float-chamber fuel level.	Adjust.
Engine runs poorly in high speed range.	1. Weakened valve springs.	Replace.
	2. Worn camshaft.	Replace.
	3. Valve timing out of adjustment.	Adjust.
	4. Too narrow spark plug gap.	Adjust.
	5. Ignition not advanced sufficiently due to poorly working timing advance circuit.	Replace ignitor unit.
	6. Defective ignition coil.	Replace.
	7. Defective pick-up coil or igntior unit.	Replace.
	8. Too low float-chamber fuel level.	Adjust.
	9. Clogged air cleaner element.	Clean.
	10. Clogged fuel hose, resulting in inadequate fuel supply to carburetor.	Clean and prime.
	11. Defective fuel tank cap.	Replace.
Dirty or heavy exhaust smoke.	1. Too much engine oil in the engine.	Check with inspection window drain out excess oil.
	2. Worn piston rings or cylinder.	Replace.
	3. Worn valve guides.	Replace.
	4. Scored or scuffed cylinder wall.	Rebore or replace.
	5. Worn valves or stems.	Replace.
	6. Defective stem seals.	Replace.
	7. Worn oil ring side rails.	Replace.
Engine lacks power.	1. Loss of valve clearance.	Adjust.
	2. Weakened valve springs.	Replace.
	3. Out of adjustment valve timing.	Adjust.
	4. Worn piston rings or cylinder.	Replace.
	5. Poor seating of valves.	Repair.
	6. Fouled spark plug.	Clean or replace.
	7. Incorrect spark plug.	Adjust or replace.
	8. Clogged jets in carburetor.	Clean.
	9. Out of adjustment float-chamber fuel level.	Adjust.
	10. Clogged air cleaner element.	Clean.
	11. Slipping or worn drive belt.	Replace.
	12. Sucking air from intake pipe.	Retighten or replace.
	13. Too much engine oil.	Drain out excess oil.
	14. Defective fuel pump or ignitor unit.	Replace.

Complaint	Symptom and possible causes	Remedy
Engine overheats.	1. Heavy carbon deposit on piston crown. 2. Not enough oil in the engine. 3. Defective oil pump or clogged oil circuit. 4. Too low in float chambers fuel level. 5. Sucking air from intake pipe. 6. Use incorrect engine oil. 7. Clogged air intake with dust.	Clean. Add oil. Replace or clean. Adjust. Retighten or replace. Change. Clean.

CARBURETOR

Complaint	Symptom and possible causes	Remedy
Trouble with tarting.	1. Clogged enrichener (choke) jet. 2. Clogged fuel pipe. 3. Clogged enrichener (choke) air passage. 4. Air leaking from carburetor's joint. 5. Not operation properly enrichener (choke) plunger.	Clean. Clean. Clean. Check and adjust. Check and adjust or replace.
Idling or low-speed trouble.	1. Clogged or loose pilot jet, pilot air jet. 2. Air leaking from carburetor's joint or enrichener (choke). 3. Clogged pilot outlet or bypass. 4. Not fully closed enrichener (choke) plunger.	Check and clean. Check and adjust. Check and clean. Check and adjust.
Medium-or high speed trouble.	1. Clogged main jet or main air jet. 2. Clogged needle jet. 3. Not operating properly throttle valve. 4. Clogged fuel filter. 5. Defective fuel tank cap.	Check and clean. Check and clean. Check throttle valve for operation. Check and clean. Replace.
Overflow and fuel level fluctuations.	1. Worn or damaged needle valve. 2. Broken spring in needle valve. 3. Not working properly float. 4. Foreign matter has adhered to needle valve. 5. Too high or low fuel level.	Replace. Replace. Check and adjust. Clean. Adjust float height.

CHASSIS

Complaint	Symptom and possible causes	Remedy
Heavy steering.	1. Overtightened steering stem nut. 2. Broken bearing in steering stem. 3. Distorted steering stem. 4. Not enough pressure in tires.	Adjust. Replace. Replace. Adjust.
Wobbly handlebars.	1. Loss of balance between right and left front forks. 2. Distorted front fork. 3. Distorted front axle or crooked tire.	Replace. Repair or replace. Replace.
Wobby front wheel.	1. Distorted wheel rim. 2. Worn front wheel bearings. 3. Defective or incorrect tire. 4. Loose axle. 5. Incorrect front fork oil level.	Replace. Replace. Replace. Retighten. Adjust.
Front suspension too soft.	1. Weakened springs. 2. Not enough fork oil.	Replace. Replenish.
Front suspension too stiff.	1. Too viscous fork oil. 2. Too much fork oil.	Replace. Drain excess oil.
Noisy front suspension.	1. Not enough fork oil. 2. Loose bolts on suspension.	Replenish. Retighten.
Wobbly rear wheel.	1. Distorted wheel rim. 2. Worn rear wheel bearing. 3. Defective or incorrect tire. 4. Worn crankcase bushing. 5. Loose axle nut or engine mounting bolts/nuts.	Replace. Replace. Replace. Replace. Retighten.
Rear suspension too soft.	1. Weakened shock absorber spring. 2. Leakage oil of shock absorber.	Replace. Replace.
Rear suspension too stiff.	1. Worn crankcase bushing.	Replace.
Noisy rear suspension.	1. Loose nuts or bolts on engine mounting. 2. Worn crankcase bushing. 3. Loose bolts on shock absorber	Retighten. Replace. Retighten.

BRAKES

Complaint	Symptom and possible causes	Remedy
Insufficient brake power.	1. Leakage of brake fluid from hydraulic system. 2. Worn pads. 3. Oil adhesion of engaging surface of pads. 4. Worn disc. 5. Air in hydraulic system. 6. Worn shoe. 7. Friction surfaces of pads are dirty with oil or dust. 8. Excessively worn piston or cylinder. 9. Not working properly delay valve.	Repair or replace. Replace. Clean disc and pads. Replace. Bleed air. Replace. Replace. Replace Replace.
Brake squeaking.	1. Carbon adhesion on pad surface. 2. Tilted pad. 3. Damaged wheel bearing. 4. Loosen front wheel axle or rear wheel axle. 5. Worn pads. 6. Foreign material in brake fluid. 7. Clogged return port of master cylinder. 8. Brake pad surface glazed.	Repair surface with sandpaper. Modify pad fitting or replace. Replace. Tighten to specified torque. Replace. Replace brake fluid. Disassemble and clean master cylinder. Repair surface with sandpaper.
Excessive brake lever stroke.	1. Air in hydraulic system. 2. Insufficient brake fluid. 3. Improper quality of brake fluid.	Bleed air. Replenish fluid to specified level; bleed air. Replace with correct fluid.
Leakage of brake fluid	1. Insufficient tightening of connection joints. 2. Cracked hose. 3. Worn piston and/or cup.	Tighten to specified torque. Replace. Replace piston and/or cup.

ELECTRICAL

Complaint	Symptom and possible causes	Remedy
No sparking or poor sparking.	1. Defective ignition coil or ignitor unit. 2. Defective spark plug. 3. Defective pick-up coil. 4. Loose connection of lead wire.	Replace. Replace. Replace. Connect/tighten.
Spark plug soon become fouled with carbon.	1. Mixture too rich. 2. Idling speed set too high. 3. Incorrect gasoline. 4. Dirty element in air cleaner. 5. Too cold spark plug.	Adjust carburetor. Adjust carburetor. Change. Clean. Replace with hot type plug.
Spark plug become fouled too soon.	1. Worn piston rings. 2. Worn piston or cylinder. 3. Excessive clearance of valve stem in valve guide. 4. Worn stem oil seal.	Replace. Replace. Replace. Replace.
Spark plug electrodes overheat or burn.	1. Too hot spark plug. 2. Overheated the engine. 3. Loose spark plug. 4. Too lean mixture.	Replace with cold type plug. Tune up. Retighten. Adjust carburetor.
Generator does not charge.	1. Open or short lead wires, or loose lead connections. 2. Shorted, grounded or open generator coils. 3. Shorted or panctured regulator/rectifier.	Repair or replace or retighten. Replace. Replace.
Generator does charge, but charging rate is below the specification.	1. Lead wires tend to get shorted or open-circuited or loosely connected at terminals. 2. Grounded or open-circuited stator coils or generator. 3. Defective regulator/rectifier. 4. Defective cell plates in the battery.	Repair or retighten. Replace. Replace. Replace the battery.
Generator overcharges.	1. Internal short-circuit in the battery. 2. Damaged or defective resistor element in the regulator/rectifier. 3. Poorly grounded regulator/rectifier.	Replace the battery. Replace. Clean and tighten ground connection.
Unstable charging.	1. Lead wire insulation frayed due to vibration, resulting in intermittent shorting. 2. Internally shorted generator. 3. Defective regulator/rectifier.	Repair or replace. Replace. Replace.
Starter button is not effective.	1. Run down battery. 2. Defective switch contacts. 3. Not seating properly brushes on commutator in starter motor. 4. Defective starter relay or side-stand relay. 5. Defective side-stand switch or safety relay.	Repair or replace. Replace. Repair or replace. Replace. Replace.

BATTERY

Complaint	Symptom and possible causes	Remedy
"Sulfation", acidic white powdery substance or spots on surfaces of cell plates.	1. Cracked battery case. 2. Battery has been left in a run-down condition for a long time.	Replace the battery. Replace the battery.
Battery runs down quickly.	1. Not correct the charging system. 2. Cell plates have lost much of their active material as a result of overcharging. 3. A short-circuit condition exists within the battery. 4. Too low battery voltage. 5. Too old battery.	Check the generator, regulator/rectifier and circuit connections and make necessary adjustments to obtain specified charging operation. Replace the battery, and correct the charging system. Replace the battery. Recharge the battery fully. Replace the battery.
Battery "sulfation".	1. Too low or too high charging rate. (When not in use batteries should be checked at least once a month to avoid sulfation.) 2. Left unused the battery for too long in cold climate.	Replace the battery. Replace the battery, if badly sulfated.
Battery discharges too rapidly.	Dirty container top and sides.	Clean.

WIRING DIAGRAM

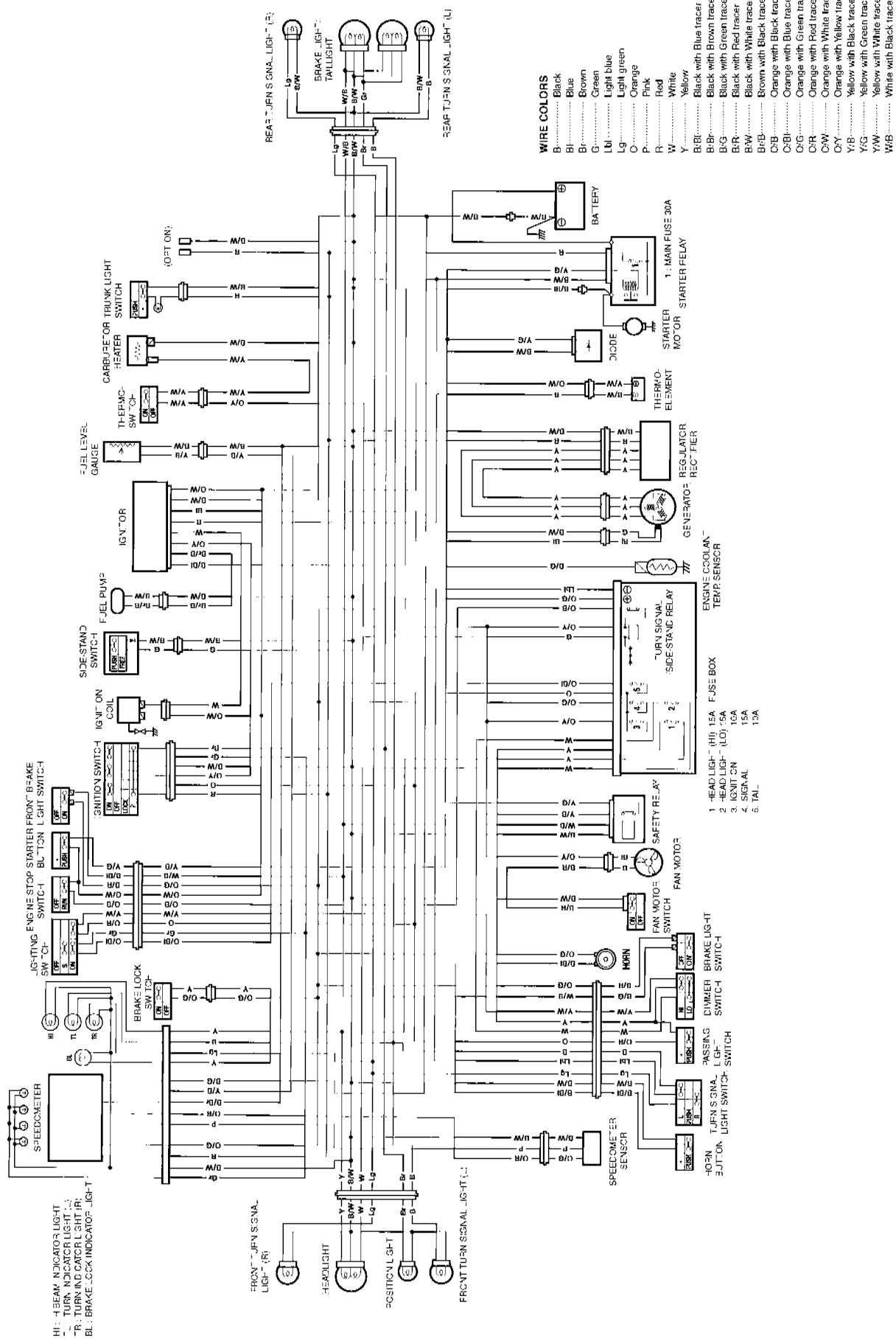

WIRE HARNESS, CABLE AND HOSE ROUTING

WIRE HARNESS ROUTING

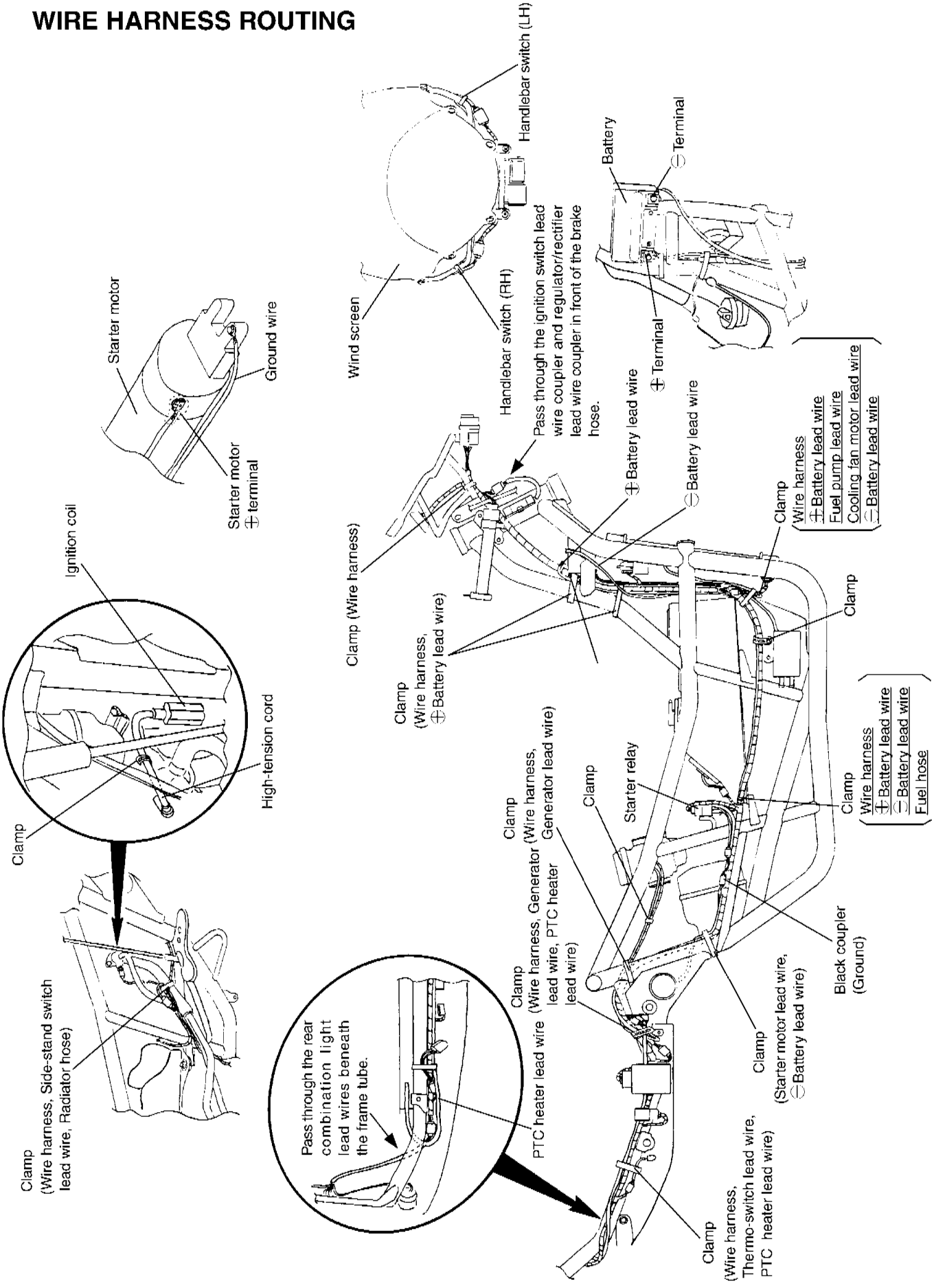

CABLE ROUTING

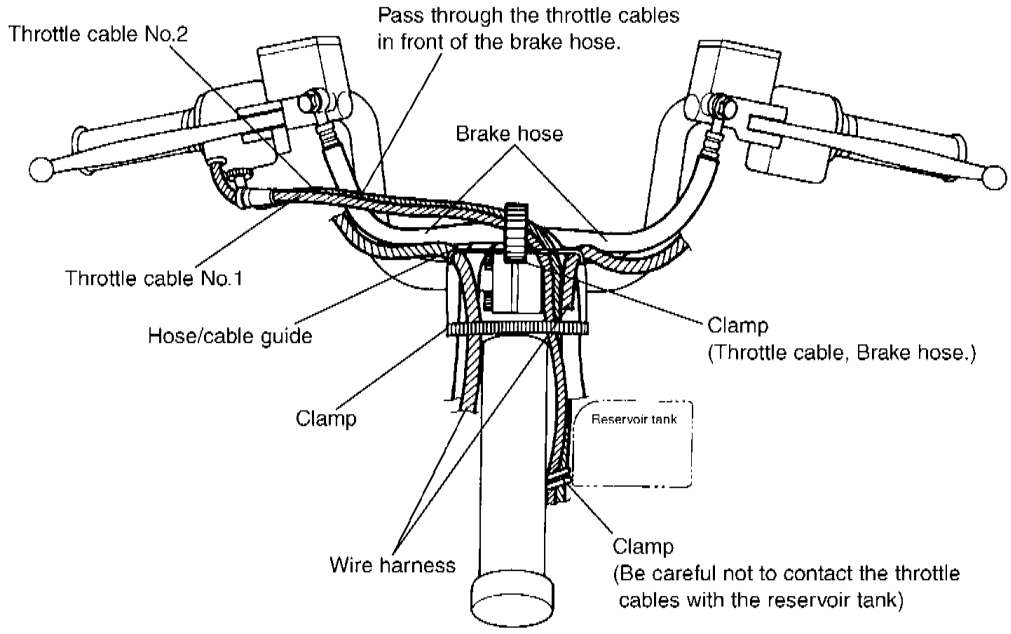

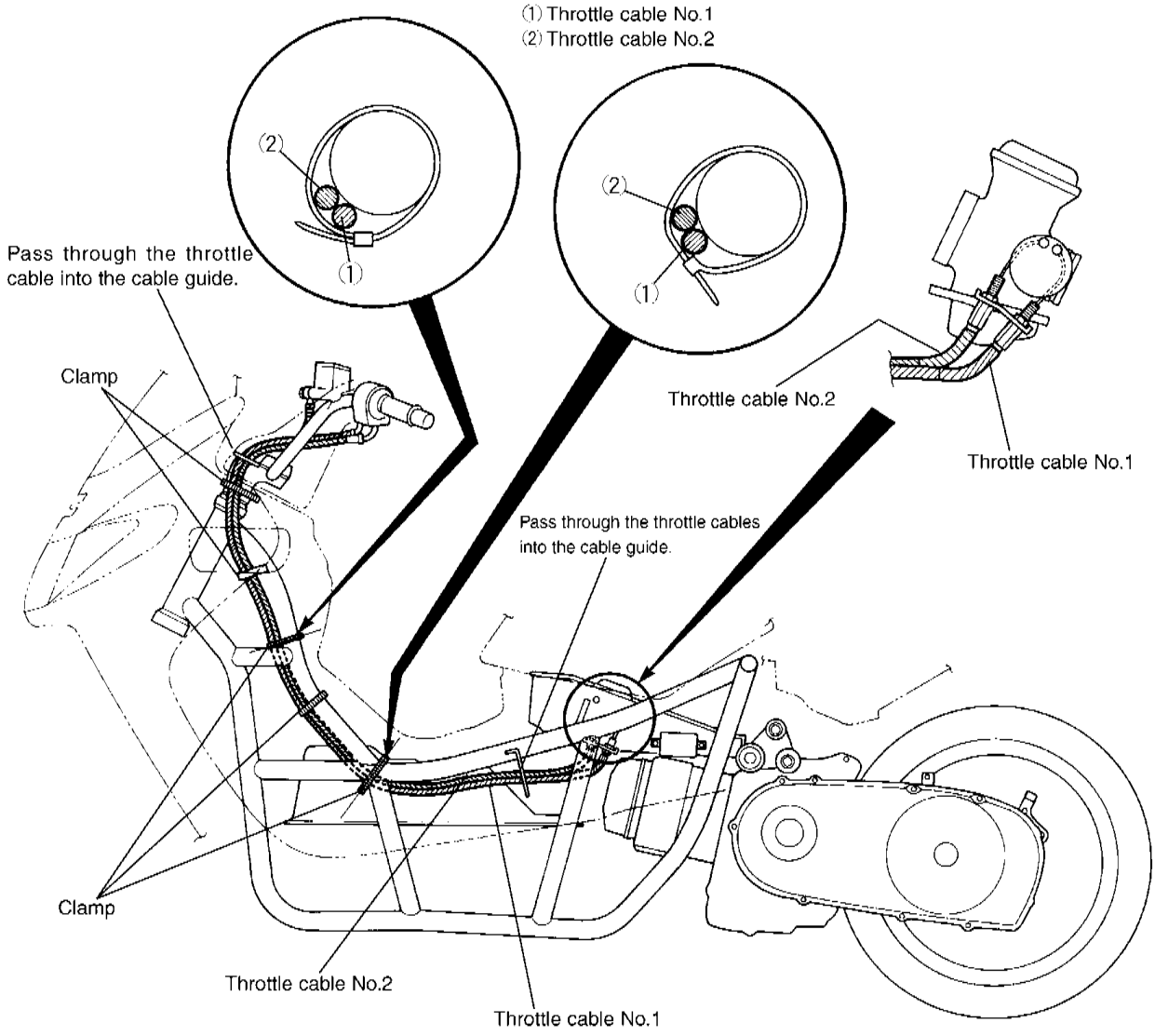

COOLING SYSTEM HOSE ROUTING

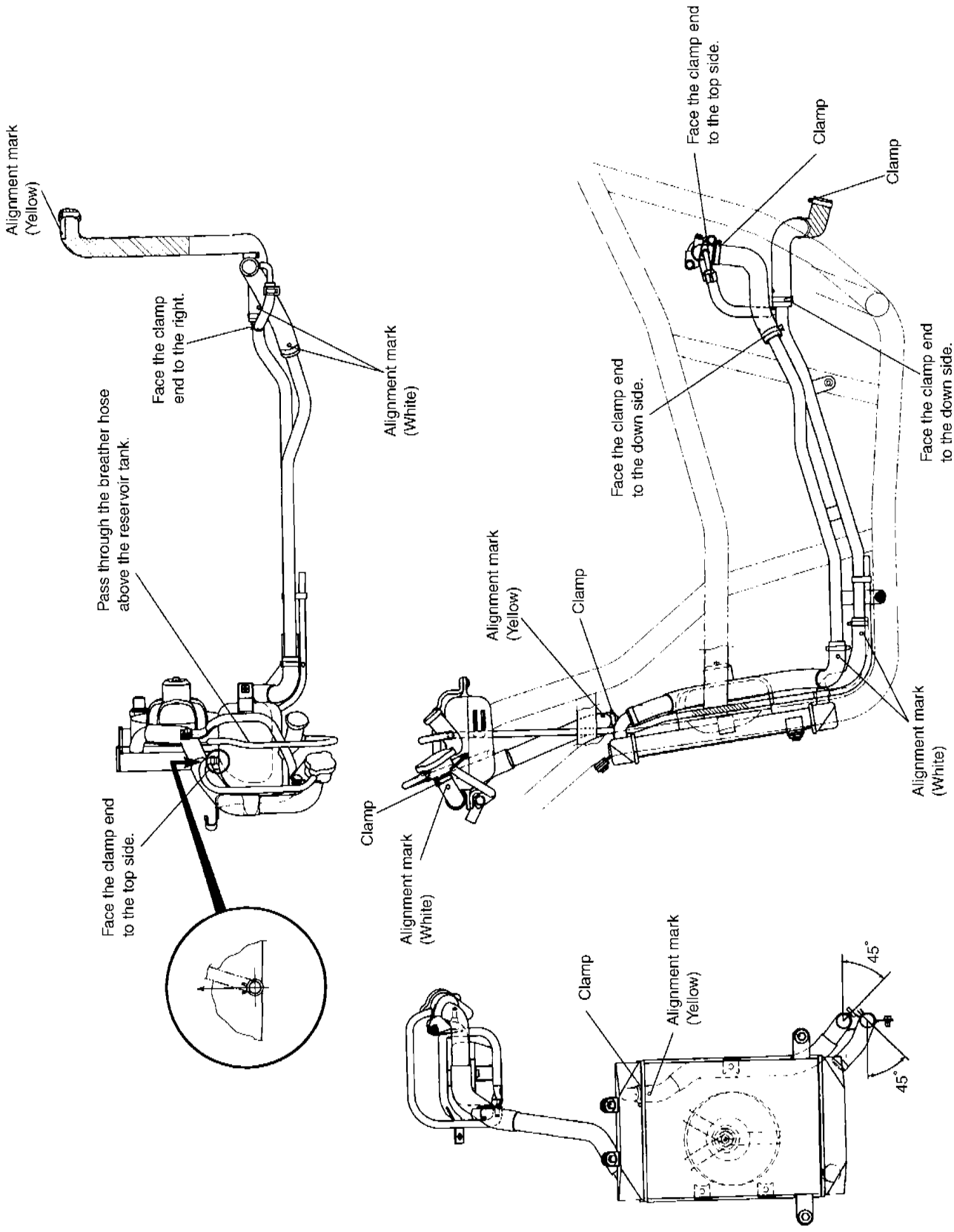

FRONT BRAKE HOSE/COMBINATION BRAKE HOSE ROUTING

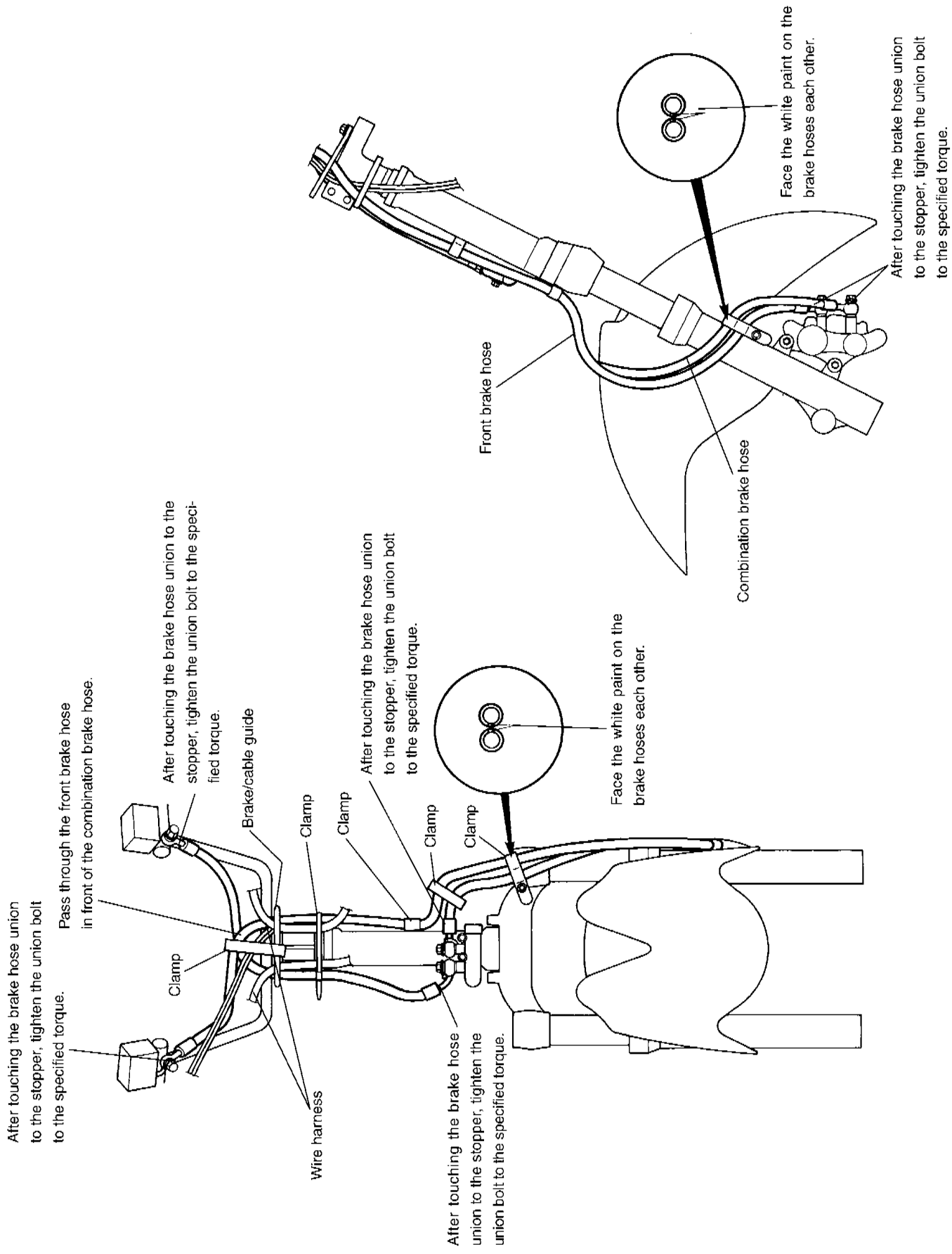

COMBINATION BRAKE HOSE ROUTING

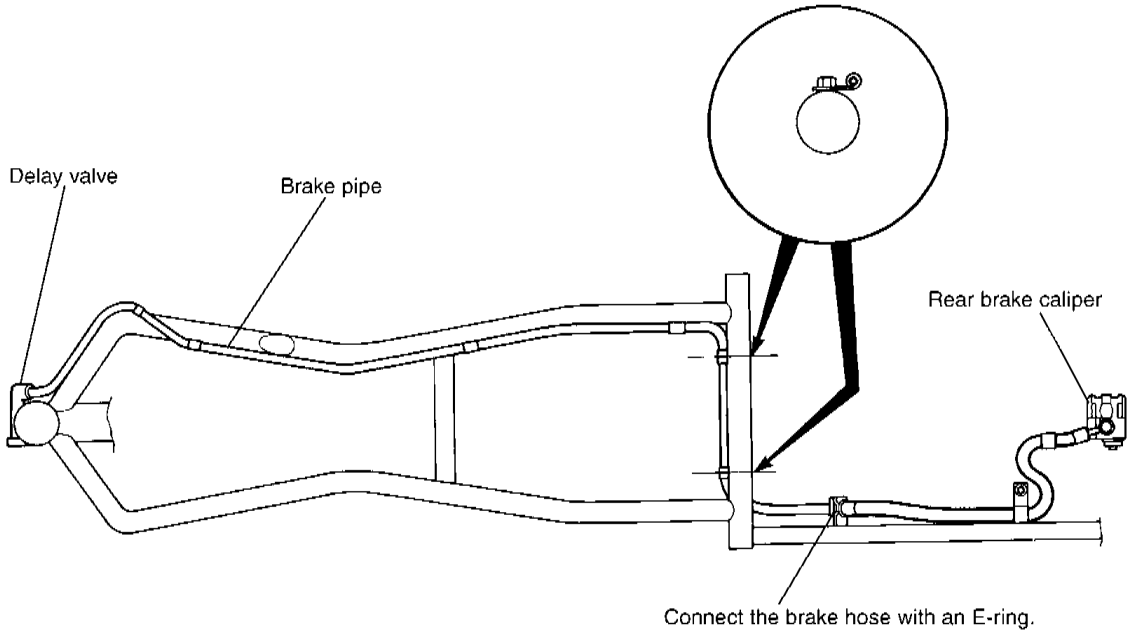

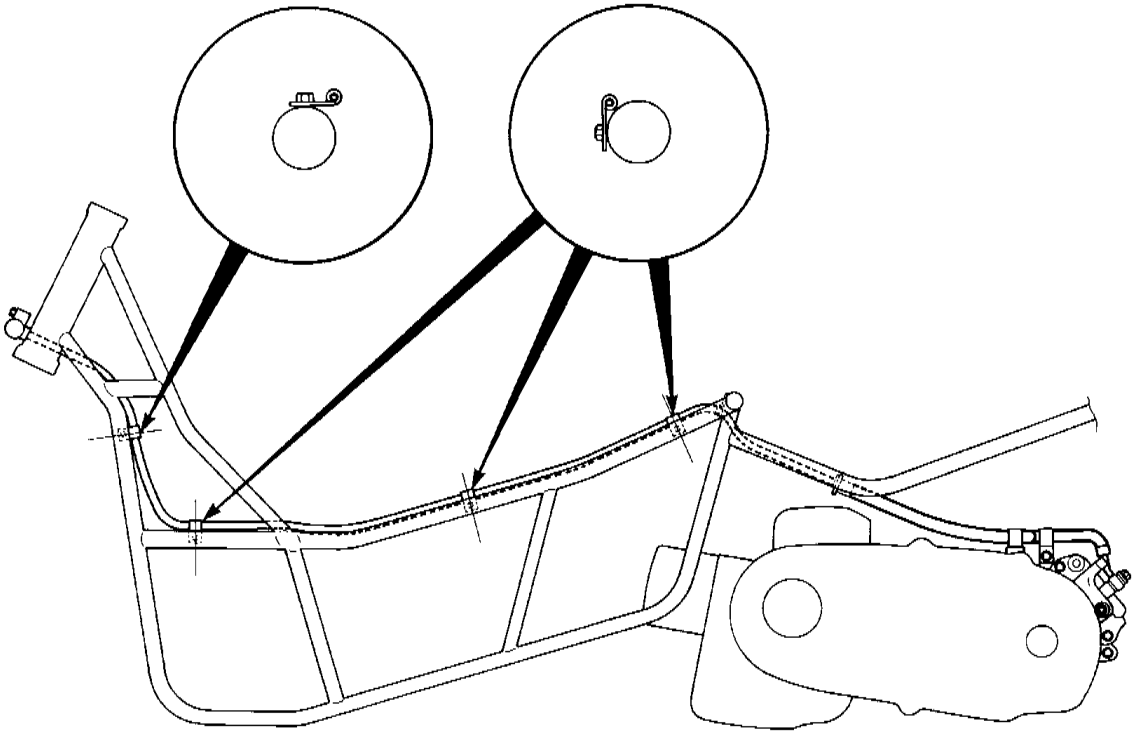

SPEEDOMETER LEAD WIRE ROUTING

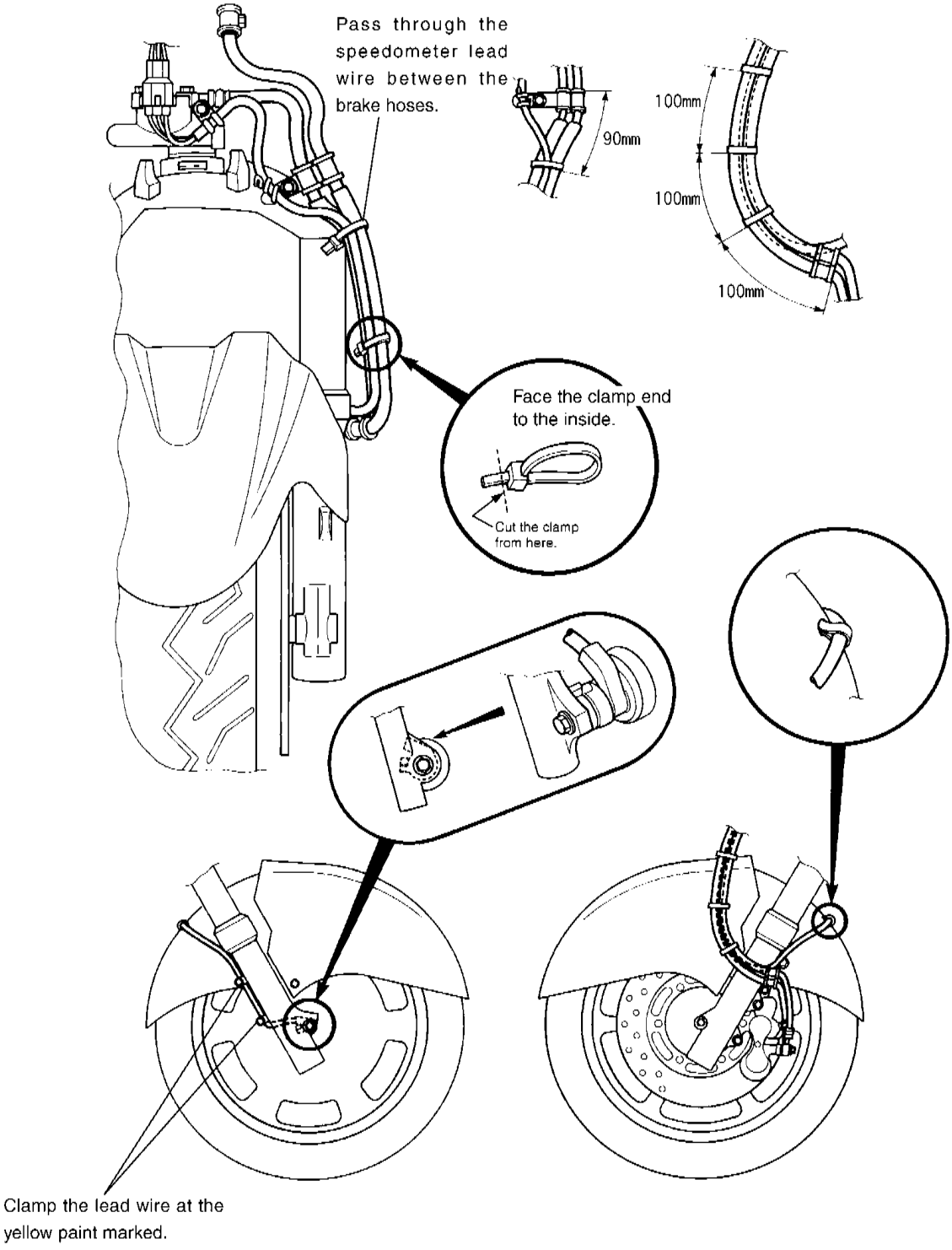

SPECIAL TOOLS

09900-00401 "L" type hexagon wrench set	09900-00410 Hexagon wrench set	09900-06107 Snap ring pliers	09900-06108 Snap ring pliers	09900-09003 Impact driver set
09900-20102 Vernier calipers (1/20 mm, 200 mm)	09900-20202 Micrometer (1/100 mm, 25-50 mm)	09900-20203 Micrometer (1/100 mm, 50-75 mm)	09900-20205 Micrometer (1/1000 mm, 0-25 mm)	09900-20508 Cylinder gauge set (1/100 mm, 40-80 mm)
09900-20602 Dial gauge (1/1000 mm, 1 mm)	09900-20605 Dial calipers (1/100 mm, 10-34 mm)	09900-20606 Dial gauge (1/100 mm, 10 mm)	09900-20701 Magnetic stand	09900-20803 Thickness gauge
09900-20805 Tire depth gauge	09900-21304 V-block set (100 mm)	09900-22302 Plastigauge	09900-22401 Small bore gauge (10-18 mm)	09900-25008 Multi-circuit tester
09900-26006 Tachometer	09900-28107 Electro tester	09910-20116 Con-rod holder	09910-32812 Crankshaft installer	09910-32840 Crankshaft installer attachment
09910-60611 Universal clamp wrench	09913-10760 Fuel level gauge	09913-50121 Oil seal remover	09913-75510 Bearing installer	09913-75520 Bearing installer

09913-75810 Bearing installer	09913-75821 Bearing installer	09913-75830 Bearing installer	09913-76010 Bearing installer	09913-84510 Bearing installer
09915-64510 Compression gauge 09915-63310 (Adaptor)	09915-74510 Oil pressure gauge	09915-74540 Oil pressure gauge adaptor	09916-14510 Valve lifter	09916-14910 Valve lifter attach-ment
09916-21111 Valve seat cutter set	09916-24311 Solid pilot (N-100-5.0)	See page 3-27. Valve seat cutter head(N-125)	09916-34542 Valve guide reamer handle	09916-34570 Valve guide reamer (5.0 mm)
09916-34580 Valve guide reamer (10.8 mm)	09916-44310 Valve guide remover/installer	09916-84511 Tweezers	09917-14910 Valve clearance adjusting driver	09920-13120 Crankcase separator
09921-20210 Bearing remover	09922-21410 Long socket wrench	09922-31410 Clutch spring compressor	09923-73210 Bearing puller (17-20 mm)	09923-74510 Bearing puller (20-35 mm)
09924-84521 Bearing installer set	09925-18011 Bearing installer	09925-98221 Bearingn installer	09930-10121 Spark plug socket wrench set	09930-11930 Torx bit

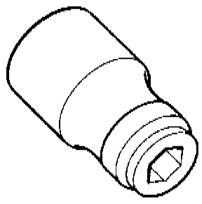 09930-11940 Torx bit holder	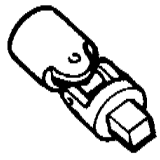 09930-14530 Universal joint	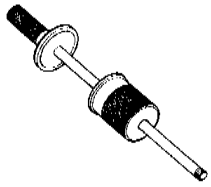 09930-30102 Sliding shaft	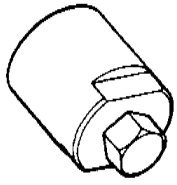 09930-30721 Rotor remover	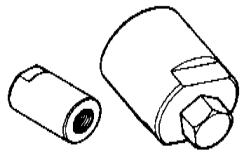 09930-31920 Rotor remover
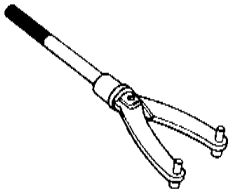 09930-40113 Rotor holder	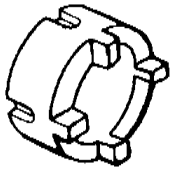 09940-11420 Steering stem nut wrench socket	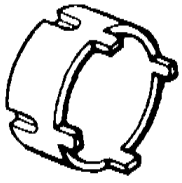 09940-11430 Steering stem nut wrench socket	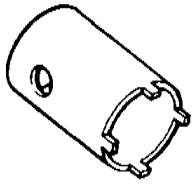 09940-14911 Steering stem nut wrench	 09940-30230 Hexagon wrench
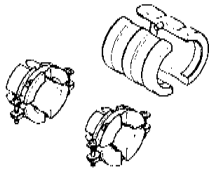 09940-52861 Front fork oil seal installer set	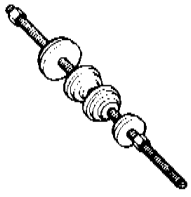 09941-34513 Steering outer race installer	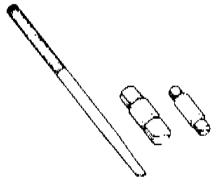 09941-50111 Bearing remover	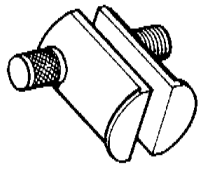 09941-54911 Bearing outer race remover	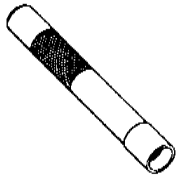 09941-74910 Steering bearing installer
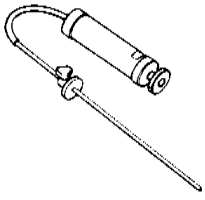 09943-74111 Front fork oil level gauge	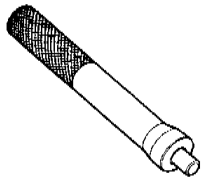 09943-88211 Bearing installer	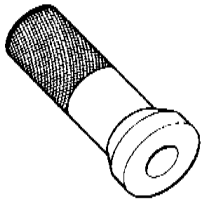 09951-76010 Bearing installer		

NOTE:

When ordering the special tool, please confirm whether it is available or not.

TIGHTENING TORQUE

ENGINE

ITEM		N · m (kg-m)
Cylinder head cover bolt		14 (1.4)
Cylinder head nut (M8)		25 (2.5)
Cylinder head nut (M6)		10 (1.0)
Cylinder base nut (M6)		10 (1.0)
Cylinder head bolt		42 (4.2)
Camshaft journal holder bolt		10 (1.0)
Cam sprockt bolt		15 (1.5) 1303
Valve adjusting lock nut		10 (1.0)
Cam chain tensioner set bolt		10 (1.0)
Cam chain tensioner adjuster mounting bolt		10 (1.0)
Spring holder bolt		8 (0.8)
Spark plug		11 (1.1)
Starter clutch bolt		25 (2.5) 1322
Generator rotor nut		160 (16.0)
Crankcase bolt	M8	22 (2.2)
	M6	11 (1.1)
Engine oil drain plug		23 (2.3)
Final gear oil drain plug		12 (1.2)
Final gear oil level plug		12 (1.2)
Final gear box cover bolt		22 (2.2)
Clutch shoe nut		78 (7.8)
Clutch housing nut		75 (7.5)
Fixed drive face nut		95 (9.5)
Exhaust pipe bolt		23 (2.3)
Muffler mounting bolt		23 (2.3)
Engine mounting nut		93 (9.3)
Crankcase bracket nut		85 (8.5)
Balancer drive gear nut		150 (15.0)
Balancer driven gear nut		50 (5.0)

CHASSIS

ITEM	N · m (kg-m)
Front axle	65 (6.5)
Axle pinch bolt	23 (2.3)
Steering stem lock nut	30 (3.0)
Handlebar holder clamp bolt	23 (2.3)
Handlebar set bolt	10 (1.0)
Handlebar clamp bolt	23 (2.3)
Front fork cap bolt	45 (4.5)
Front fork clamp bolt	23 (2.3)
Brake master cylinder bolt	10 (1.0)
Brake hose union bolt	23 (2.3)
Brake caliper mounting bolt	25 (2.5)
Brake air bleeder valve	7.5 (0.75)
Brake disc bolt	23 (2.3)
Rear axle nut	100 (10.0)
Rear shock absorber bolt	50 (5.0)
Cushion lever mounting nut	78 (7.8)
Cushion lever nut	50 (5.0)
Cushion rod nut	50 (5.0)

TIGHTENING TORQUE CHART

For other bolts and nuts listed previously, refer to this chart:

Bolt Diameter	Conventional or "4" marked bolt		"7" marked bolt	
Ⓐ (mm)	N · m	kg-m	N · m	kg-m
4	1.5	0.15	2.3	0.23
5	3	0.3	4.5	0.45
6	5.5	0.55	10	1.0
8	13	1.3	23	2.3
10	29	2.9	50	5.0
12	45	4.5	85	8.5
14	65	6.5	135	13.5
16	105	10.5	210	21.0
18	160	16.0	240	24.0

Conventional bolt

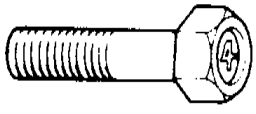

"4" marked bolt

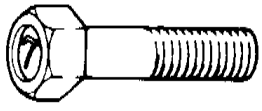

"7" marked bolt

SERVICE DATA

VALVE + GUIDE

Unit: mm

ITEM	STANDARD		LIMIT
Valve diam.	IN.	28.3	———
	EX.	25.0	———
Valve clearance (when cold)	IN.	0.08 - 0.13	———
	EX.	0.17 - 0.22	———
Valve guide to valve stem clearance	IN.	0.010 - 0.037	———
	EX.	0.030 - 0.057	———
Valve stem deflection	IN. & EX.	———	0.35
Valve guide I.D.	IN. & EX.	5.000 - 5.012	———
Valve stem O.D.	IN.	4.975 - 4.990	———
	EX.	4.955 - 4.970	———
Valve stem runout	IN. & EX.	———	0.05
Valve head thickness	IN. & EX.	———	0.5
Valve stem end length	IN. & EX.	———	1.8
Valve seat width	IN. & EX.	0.9 - 1.1	———
Valve head radial runout	IN. & EX.	———	0.03
Valve spring free length (IN. & EX.)	INNER	———	34.9
	OUTER	———	38.2
Valve spring tension (IN. & EX.)	INNER	5.3 - 6.5 kg at length 28 mm	———
	OUTER	13.1 - 15.1 kg at length 31.5 mm	———

CAMSHAFT + CYLINDER HEAD

Unit: mm

ITEM	STANDARD		LIMIT
Cam height	IN.	33.43 - 33.47	33.13
	EX.	33.50 - 33.54	33.20
Camshaft journal oil clearance	ϕ 22	0.032 - 0.066	0.150
	ϕ 17.5	0.028 - 0.059	0.150
Camshaft journal holder I.D.	ϕ 22	22.012 - 22.025	———
	ϕ 17.5	17.512 - 17.525	———
Camshaft journal O.D.	ϕ 22	21.959 - 21.980	———
	ϕ 17.5	17.466 - 17.484	———
Rocker arm I.D.	IN. & EX.	12.000 - 12.018	———
Rocker arm shaft O.D.	IN. & EX.	11.973 - 11.984	———
Cylinder head distortion		———	0.05

CYLINDER + PISTON + PISTON RING

Unit: mm

ITEM	STANDARD			LIMIT
Compression pressure	1480 kPa (14.8 kg/cm²)			1030 kPa (10.3 kg/cm²)
Piston to cylinder clearance	0.040 - 0.050			0.120
Cylinder bore	73.000 - 73.015			73.090
Piston diam.	72.955 - 92.970 Measure at 15 mm from the skirt end.			72.880
Cylinder distortion	———			0.05
Piston ring free end gap	1st	R	Approx. 9.3	7.4
	2nd	R	Approx. 7.2	5.7
Piston ring end gap	1st		0.10 - 0.30	0.5
	2nd		0.35 - 0.50	1.0
Piston ring to groove clearance	1st		———	0.18
	2nd		———	0.15
Piston ring groove width	1st		1.01 - 1.04	———
	2nd		1.01 - 1.04	———
	Oil		2.01 - 2.03	———
Piston ring thickness	1st		0.97 - 0.99	———
	2nd		0.97 - 0.99	———
Piston pin bore	19.002 - 19.008			19.030
Piston pin O.D.	18.996 - 19.000			18.980

CONROD + CRANKSHAFT

Unit: mm

ITEM	STANDARD	LIMIT
Conrod small end I.D.	19.006 - 19.014	19.040
Conrod deflection	———	3.0
Conrod big end side clearance	0.10 - 0.65	1.00
Conrod big end width	21.95 - 22.00	———
Crank web to web width	60.0 ± 0.1	———
Crankshaft runout	———	0.08

OIL PUMP

ITEM	STANDARD	LIMIT
Oil pump reduction ratio	1.470 (25/17)	———
Oil pressure (at 60°C, 140°F)	Above 80 kPa (0.8 kg/cm²) Below 160 kPa (1.6 kg/cm²) at 3000 r/min.	———

CLUTCH

Unit: mm

ITEM	STANDARD	LIMIT
Clutch wheel I.D.	135.0 - 135.2	135.5
Clutch shoe thickness	3.0	2.0
Clutch engagement	2600 - 3200 r/min.	———
Clutch lock-up	4200 - 5200 r/min.	———

TRANSMISSION

Unit: mm Except ratio

ITEM	STANDARD	LIMIT
Reduction ratio	Variable change 2.047 - 0.805	———
Final reduction ratio	8.066 (44/16 × 44/15)	———
Drive belt width	22.7	21.7
Movable drive face roller O.D.	23.72 - 23.88	———
Movable driven face spring free length	105.2	99.9

CARBURETOR

ITEM	SPECIFICATION		
	E-02, 04, 34	E-22	E-18
Carburetor type	KEIHIN CVK30	←	←
Bore size	30 mm	←	←
I.D. No	14F0	14F2	14F3
Idle r/min.	1500 ± 100 r/min.	←	1500 ± 50 r/min.
Float height	23.0 ± 1.0 mm	←	←
Main jet (M.J.)	#105	#108	←
Main air jet (M.A.J.)	Press-fitted	←	←
Jet needle (J.N.)	N7AD	←	←
Needle jet (N.J.)	ϕ 2.1	←	←
Throttle valve (Th.V.)	θ =10℃	←	←
Pilot jet (P.J.)	#38	←	#40
Pilot screw (P.S.)	PRE-SET (2 3/4 turns out)	←	←
Throttle cable play	2 - 4 mm	←	←

ELECTRICAL

ITEM		SPECIFICATION		NOTE
Ignition timing		10° B.T.D.C at 1500 r/min.		
Spark plug		Type	ND: U24ETR NGK: CR8EK	
		Gap	0.7 - 0.8	
Spark performance		Over 8 at 1 atm.		
Ignition coil resistance		Primary	3 - 5 Ω	Tester range: (×1 Ω)
		Secondary	17 - 30 Ω	Tester range: (×1 kΩ)
Magneto coil resistance		Pick-up	184 - 276 Ω	Tester range: (×100 Ω)
Generator no-load voltage		More than 56V (AC) at 5000 r/min.		
Regulated voltage		13.5 - 15.0 V at 5000 r/min.		
Starter relay resistance		2 - 6 Ω		
Battery	Type designation	FTX7A-BS		
	Capacity	12V 21.6 kC (6Ah)/10HR		
Fuse size		Headlight	HI: 15A LO: 15A	
		Turn signal	15A	
		Ignition	10A	
		Taillight	10A	
		Main	30A	
Carburetor heater coil resistance		12 - 18 Ω		
Fuel level gauge resistance		Full	Approx. 5 Ω	
		Empty	Approx. 103 Ω	

WATTAGE

Unit: W

ITEM		SPECIFICATION
Headlight	HI	60
	LO	55
Position or city light		5
Brake light/taillight		21/5
Turn signal light		21
Speedometer light		1.7
Fuel level meter light		1.7
Engine coolant temp. meter light		1.7
Turn signal indicator light		1.7
High beam indicator light		1.7
Trunk light		2

BRAKE + WHEEL

Unit: mm

ITEM			STANDARD	LIMIT
Brake disc thickness		Front	4.5 ± 0.2	4.0
		Rear	5.0 ± 0.2	4.5
Brake disc runout		Front & Rear	———	0.30
Master cylinder bore		Front	11.000 - 11.043	———
		Rear	14.000 - 14.043	———
Master cylinder piston diam.		Front	10.957 - 10.984	———
		Rear	13.957 - 13.984	———
Brake caliper cylinder bore	Leading	Front	22.650 - 22.700	———
	Trailing		33.960 - 34.010	———
		Rear	25.400 - 25.450	———
Brake caliper piston diam.	Leading	Front	22.568 - 22.618	———
	Trailing		33.878 - 33.928	———
		Rear	25.335 - 25.368	———
Wheel rim runout		Axial	———	2.0
		Radial	———	2.0
Wheel axle runout		Front	———	0.25
Tire size		Front	110/90 - 13M/C 55P	———
		Rear	130/70 - 13M/C 63P	———
Wheel rim size		Front	13 × MT3.00	———
		Rear	13 × MT3.50	———
Tire tread depth		Front	———	1.6
		Rear	———	1.6

SUSPENSION

Unit: mm

ITEM	STANDARD	LIMIT	NOTE
Front fork stroke	100	———	
Front fork spring free length	257	251	
Rear wheel travel	100	———	
Front fork oil level	98	———	

TIRE PRESSURE

COLD INFLATION TIRE PRESSURE	SOLD RIDING		DUAL RIDING	
	kPa	kg/cm²	kPa	kg/cm²
FRONT	175	1.75	175	1.75
REAR	200	2.00	280	2.80

FUEL + OIL + ENGINE COOLANT

ITEM	SPECIFICATION		NOTE
Fuel type	Gasoline used should be graded 91 octane or higher. An unleaded gasoline is recommended.		
Fuel tank capacity	13.0 L		
Engine oil type	SAE 10W/40, API SF or SG		
Engine oil capacity	Change	1900 ml	
	Filter change	2000 ml	
	Overhaul	2300 ml	
Final gearbox oil type	SAE 10W/40, API SF or SG		
Final gearbox oil capacity	Change	190 ml	
	Overhaul	200 ml	
Front fork oil type	Fork oil #10		
Front fork oil capacity (each leg)	292 ml		
Brake fluid type	DOT 4		
Engine coolant type	Use an anti-freeze/coolant compatible with aluminum radiator, mixed with distilled water only, at the ratio of 50 : 50.		
Engine coolant capacity	Reservoir only	250 ml	
	Without reservoir	1500 ml	

THERMOSTAT + RADIATOR + FAN

Unit: mm

ITEM		STANDARD	LIMIT
Thermostat valve opening temperature		Approx. 75℃ (167°F)	———
Thermostat valve lift		Over 3 mm at 90℃ (194°F)	———
Radiator cap valve opening pressure		110 kPa (1.1 kg/cm²)	———
Cooling fan thermo-switch operating temperature	OFF → ON	Approx. 105℃ (221°F)	———
	OFF → ON	Approx. 100℃ (212°F)	———
Engine coolant temperature sensor resistence	50℃ (122°F)	140 - 310 Ω	———
	115℃ (239°F)	24.1 - 28.2 Ω	———

AN250W (APPENDIX)

This chapter describes additional service information for the AN250W ('98-MODEL).

NOTE:
Please refer to the chapters 1 through 8 for details which are not given in this chapter.

CONTENTS

BRAKE-LOCK SYSTEM

- The brake-lock system is equipped on the rear brake.
- Pulling the brake-lock lever knob provided in the front box section will lock the rear wheel with the caliper piston of rear brake forced against the brake pad.

NOTE:
The function of brake-lock system is different from that of parking brake. Use this system mainly for holding the motorcycle at stop on incline.

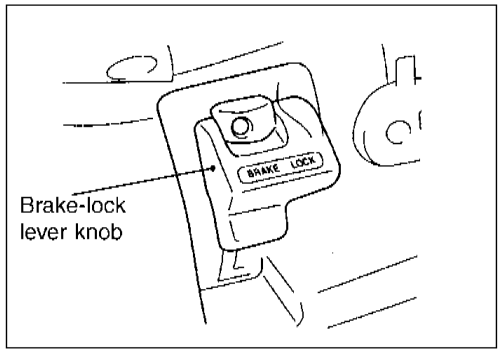

DESCRIPTION

When the brake-lock lever knob is operated, it pulls the brake cable causing the arm ① to turn together with the brake-lock shaft. Because this shaft has a spiral groove Ⓐ, it moves axially while turning counterclockwise as shown causing the brake caliper piston ② to press the rear brake pad.

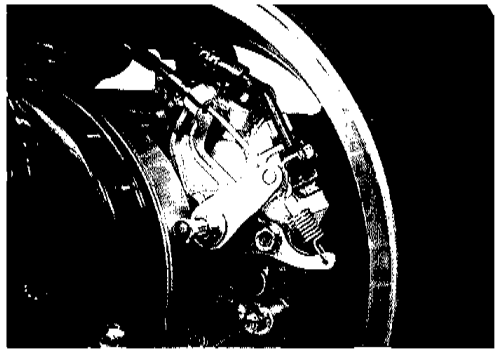

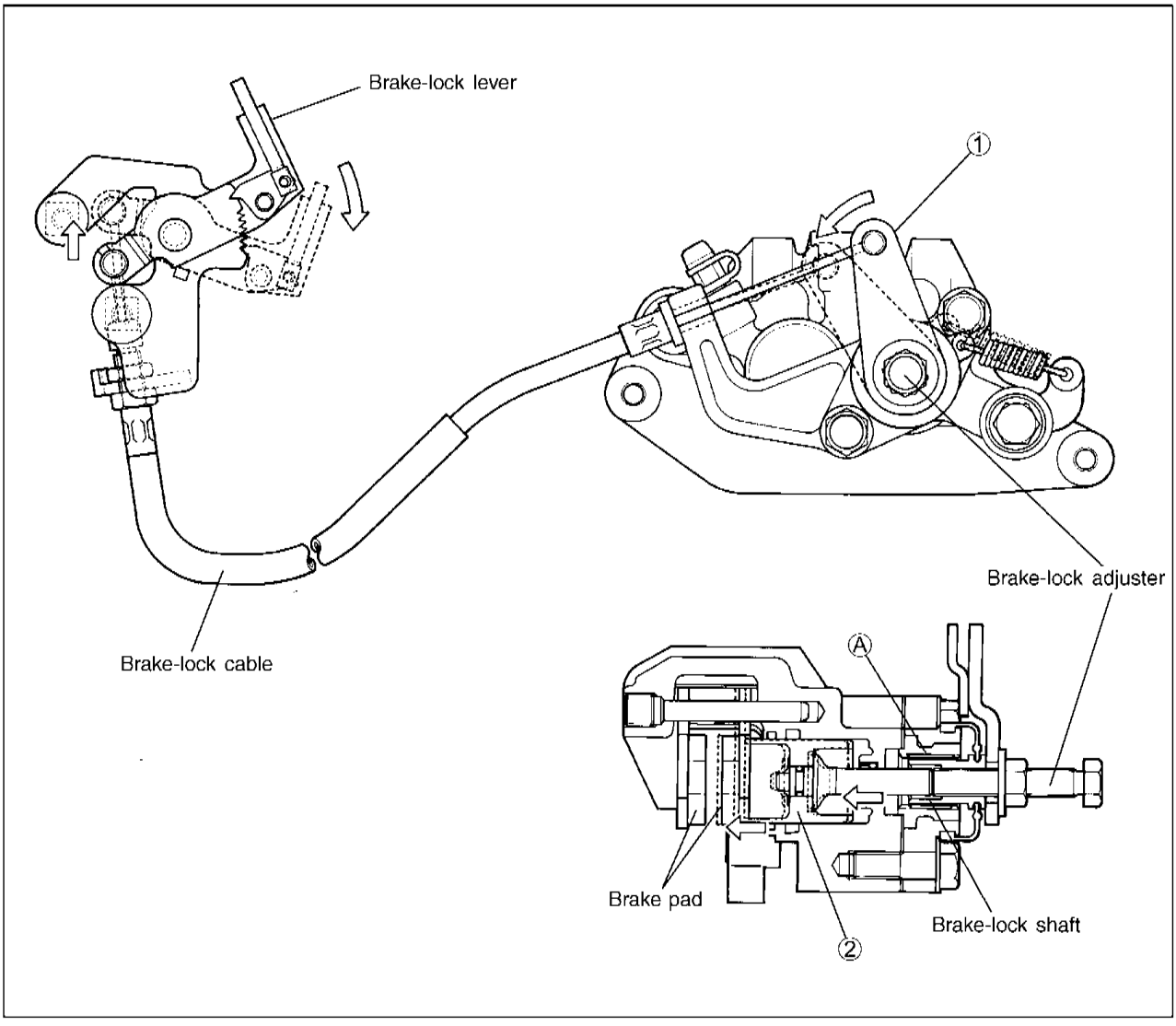

OPREATION OF BRAKE-LOCK SYSTEM

LOCK

- Bring the motorcycle to stop.
- While squeezing the left brake lever, pull the brake-lock lever knob toward you.

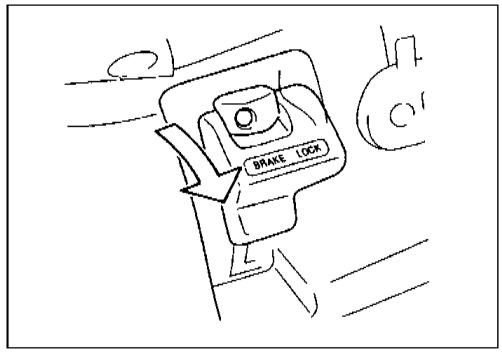

NOTE:
When the brake-lock lever knob is pulled, the rear brake caliper piston is forced outward. During this operation, the hydraulic pressure is raised when the left brake lever is squeezed, thereby assisting power in pushing the piston.

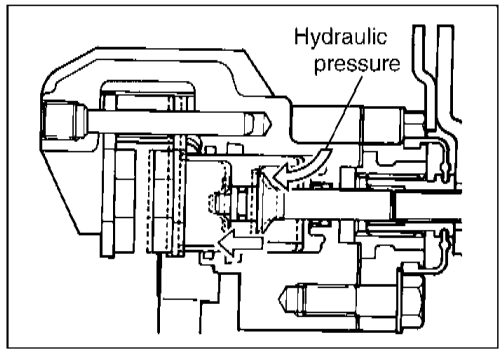

RELEASE

- With the left brake lever held squeezed, push on the brake release button and lift up the brake-lock lever knob.

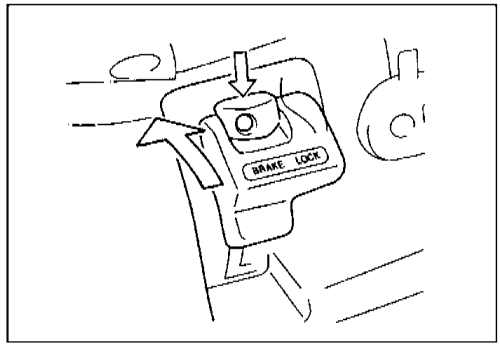

BRAKE-LOCK SYSTEM INSPECTION

- With the brake-lock lever knob pulled all the way, attempt to push the motorcycle and check that the rear wheel is securely locked.
- If any abnormal condition is noted, adjust the brake-lock system. Perform the inspection again and if the abnormal condition still exists, carry out the following inspection.

* Brake ..... See page 2-10 of AN250W Service Manual.

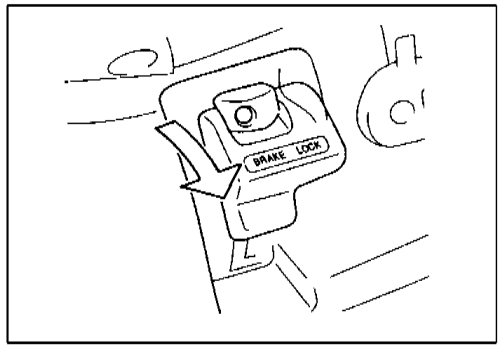

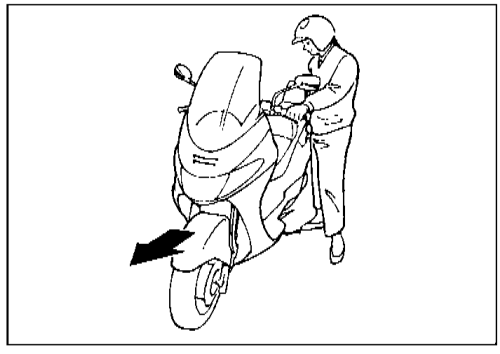

BRAKE-LOCK SYSTEM ADJUSTMENT

- Pull the brake-lock lever knob by one notch.

NOTE:
There are six positions (six notches) provided in the total movable range of the brake-lock lever ratchet. This position can be checked by hearing a click sound as the brake lever knob is pulled without pressing the release button.

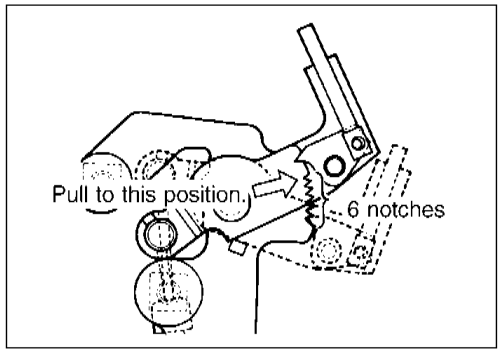

- Loosen the lock nut ① and screw in the brake-lock adjuster ② by hand all the way.
- Tighten the lock nut ①.

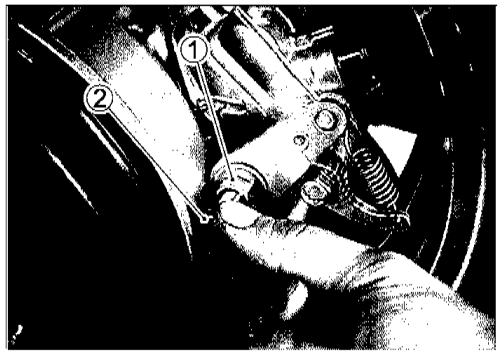

- Return the brake-lock lever knob to the original position and check for brake-lock operation.

⚠ CAUTION

After the brake-lock system has been adjusted, check for brake fluid level of the combination brake side.

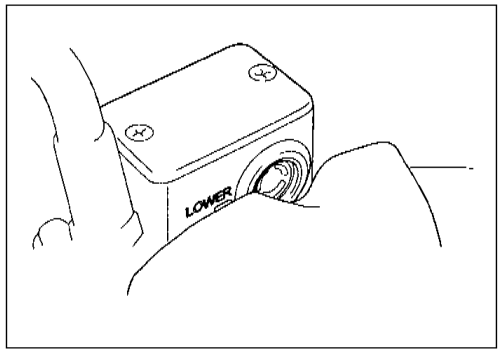

BRAKE-LOCK LIGHT INSPECTION

- With the ignition switch turned to ON position, pull the brake-lock lever knob and at this time check that the brake-lock light turns on.
- If any abnormal condition is noted, perform the following inspection or replace the parts.

* Brake-lock switch ..... See page 9-10.
* Speedometer light bulb ..... See page 7-23 of AN250W Service Manual.

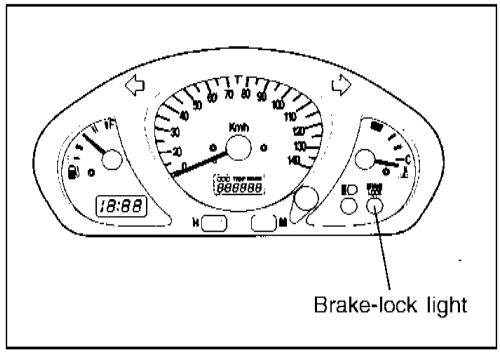

BRAKE-LOCK LEVER REMOVAL AND REINSTALLATION

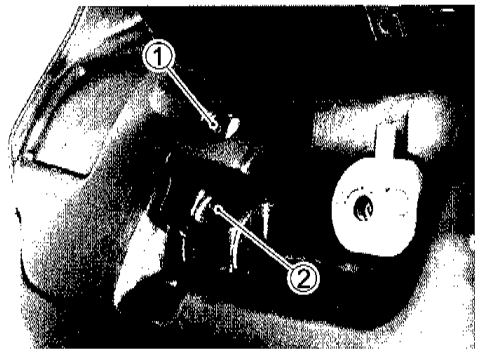

- Loosen the screw ① and remove the brake release button.
- Loosen the screw ② and remove the brake-lock lever knob.

- Remove the front box. (See page 6-17 of AN250W Service Manual.)

NOTE:
Loosen the brake-lock adjuster and with the brake-lock lever pulled all the way, remove the front box.

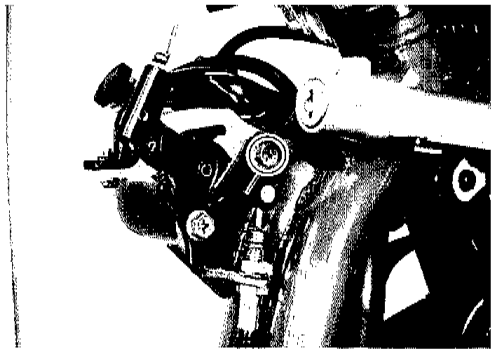

- Remove the brake-lock switch.
- Loosen the bolt and remove the brake-lock lever.

Brake-lock lever bolt: 10 N·m (1.0 kgf·m)

- Disconnect the brake-lock cable connection.

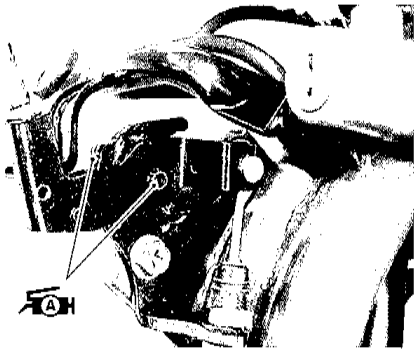

- To assemble, reverse the sequence of the disassembly procedures.
- Apply grease to the brake-lock lever shaft and ratchet.

99000-25010: SUZUKI SUPER GREASE "A"

REAR BRAKE

⚠ WARNING

* **Do not mix with brake fluid of different brand.**
* **Do not use a brake fluid kept in an open container or stored for long period of time.**
* **To store brake fluid, make sure to seal the container and keep it in a safe place to be out of reach of children.**
* **When filling brake fluid, take care not to allow water or dirt to enter the system.**
* **To wash the brake system parts, use brake fluid and not any other material.**
* **Do not allow dirt and fluids to contact the brake disc or pad.**

⚠ CAUTION

Do not allow brake fluid to contact the paint surface, plastic or rubber parts, or its chemical reaction can cause discoloration or crack.

BRAKE FLUID REPLACEMENT

- For replacing procedure of brake fluid, see page 2-12 of AN250W Service Manual.

BRAKE PAD REPLACEMENT

- For replacing procedure of brake pad, see page 6-45 of AN250W Service Manual.

⚠ CAUTION

After brake fluid or brake pad has been replaced, perform the brake-lock adjustment.

CALIPER REMOVAL AND DISASSEMBLY

- Drain brake fluid of the combination brake side. (See page 2-12 of AN250W Service Manual.)
- Remove the rear wheel. (See page 6-43 of AN250W Service Manual.)
- Loosen the lock nut ① and remove the brake-lock adjuster ②.

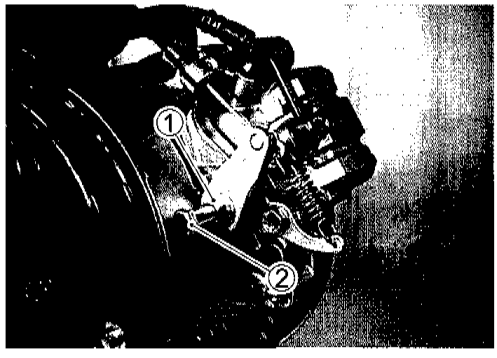

- Remove the brake-lock cable ③, return spring ④ and brake-lock arm ⑤.

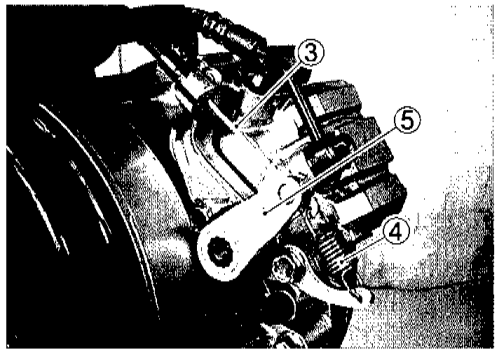

- Remove the caliper mounting bolts and union bolt.
- Remove the caliper.

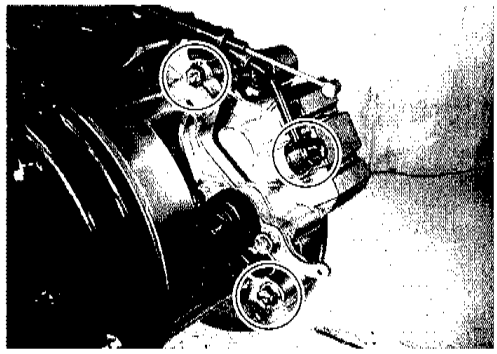

- Remove the bolts and remove the brake-lock housing ①.

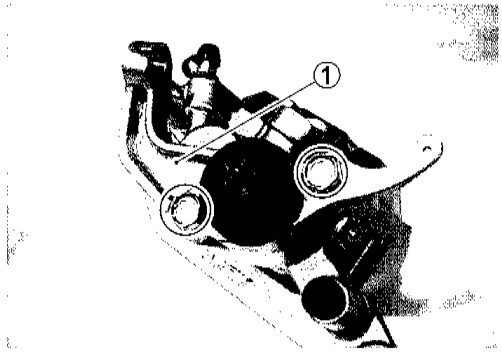

- Remove the brake lock shaft ② from the brake-lock housing.

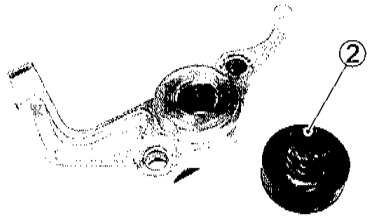

- Remove the brake pads. (See page 6-45 of AN250W Service Manual.)

- Remove the caliper bracket ③ and pad spring ④.

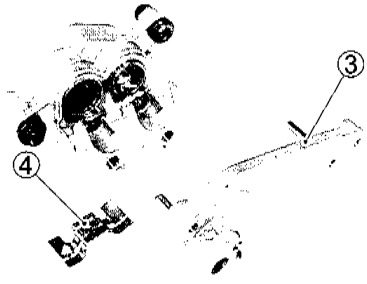

- Using an air blow gun, pressurize the caliper fluid chamber to push out the pistons.

⚠ WARNING

- **Place a rag over the piston to prevent it from popping out and flying and keep hand off the piston.**
- **Be careful of brake fluid, which can possibly splash.**
- **Do not use high-pressure air but increase the pressure gradually.**

- To remove the piston of brake-lock side, push on the brake -lock shaft.

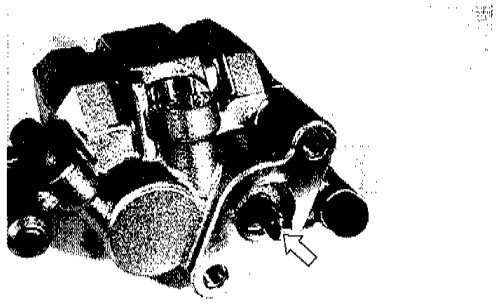

- Remove the dust seals ① and piston seals ② from the cylinders.

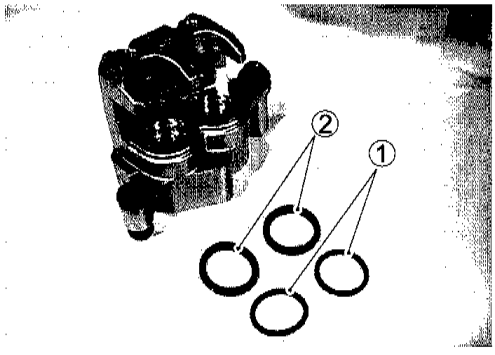

⚠ CAUTION

- **Use care not to cause scratch on the cylinder bore.**
- **Do not reuse the piston seal and dust seal that have been removed.**

INSPECTION

- Inspect the seal ① for brake fluid leakage, damage or crack.
- If any abnormal condition is noted, replace the seal.

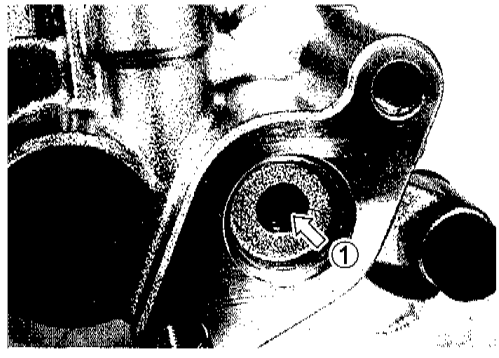

- Caliper (See page 6-25 of AN250W Service Manual.)
- Piston (See page 6-25 of AN250W Service Manual.)

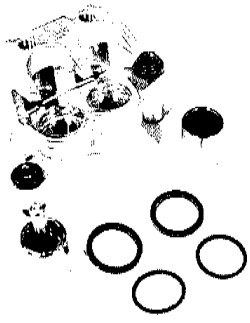

REASSEMBLY

- Reassemble the caliper in the reverse order of disassembly procedures and observe the following points.

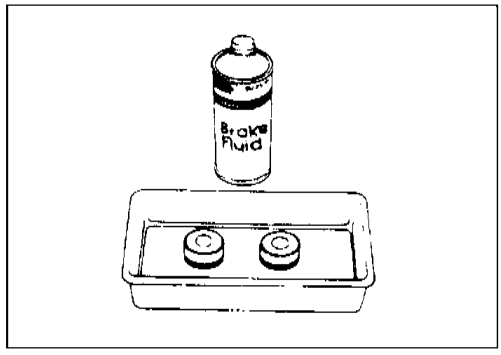

▲ CAUTION

> * **Wash each component with fresh brake fluid before reassembly. Do not wipe off brake fluid after washing the components.**
> * **Replace the piston seal and dust seal with new ones with brake fluid applied.**

Brake fluid specification and classification: DOT 4

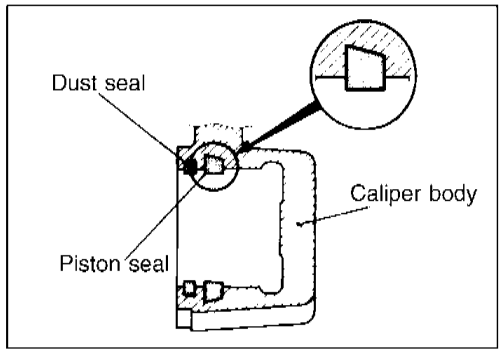

- Assemble the bracket with silicone grease applied to the caliper axles.

99000-25100: SUZUKI SILICONE GREASE

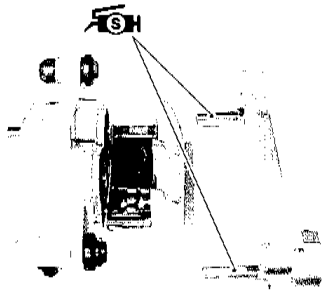

- Assemble the pad spring.
- Assemble the gasket ①.

▲ CAUTION

> **Use the gasket ① of new one.**

- Apply silicone grease to the brake-lock shaft.

99000-25100: SUZUKI SILICONE GREASE

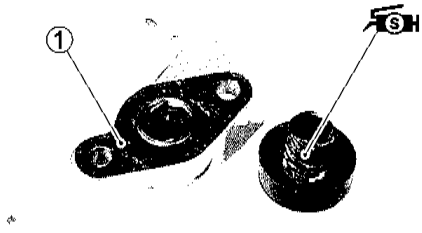

- Tighten the brake-lock shaft all the way (counterclockwise) so that the punch mark Ⓐ is brought to the position between the lines Ⓑ on the housing.

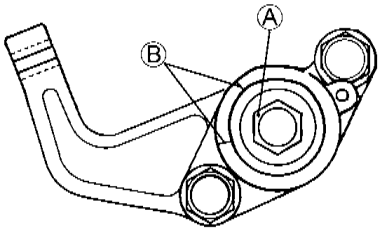

- With the thread lock applied, tighten the bolts.

Brake lock housing bolt: 23 N·m (2.3 kgf·m)

99000-32130: THREAD LOCK SUPER "1360"

- Tighten the caliper mounting bolts.

Caliper mounting bolt: 25 N·m (2.5 kgf·m)

- Tighten the union bolt.

Union bolt: 23 N·m (2.3 kgf·m)

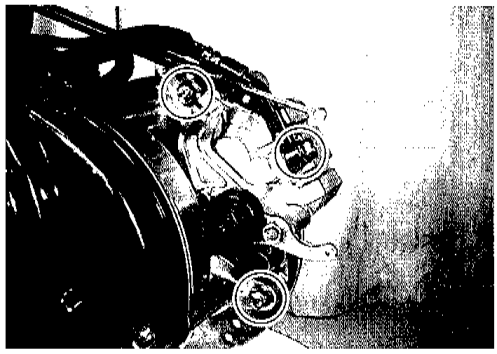

⚠ CAUTION

Make sure to slide the brake disc on the spline all the way toward the engine case before tightening the caliper mounting bolts.

- Assemble the brake-lock lever so that the punch mark on the lever aligns with that on the brake-lock housing.

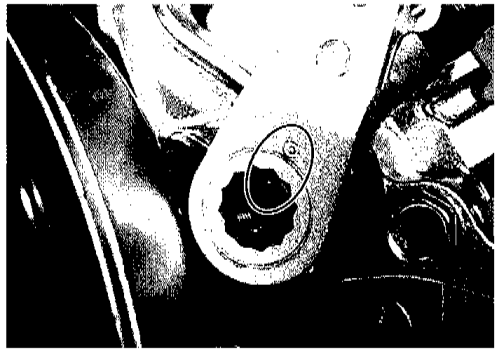

- Assemble the return spring ①, brake-lock cable ② and brake-lock adjuster ③.

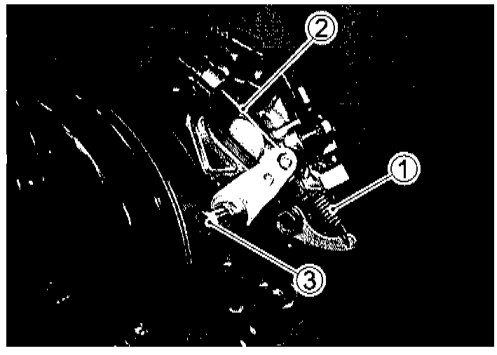

INSPECTION AFTER REASSEMBLY

* Rear brake inspection ..... AN250W Service Manual (See page 2-10.)
* Brake fluid replacement ..... AN250W Service Manual (See page2-12.)
* Brake-lock system adjustment ..... See page 9-4.

Brake-lock switch

- Remove the front box. (See page 6-17 of AN250W Service Manual.)
- Check for continuity between the terminals when the brake-lock lever knob is pulled. If any abnormal condition is noted, replace the switch.

TOOL 09900-25008: Multi-circuit tester

	Orange/Green	Violet
Brake-lock lever knob pulled (ON)	○	○
Brake-lock lever knob returned (OFF)		

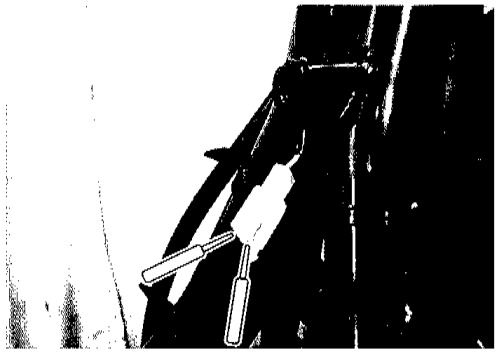

CABLE ROUTING

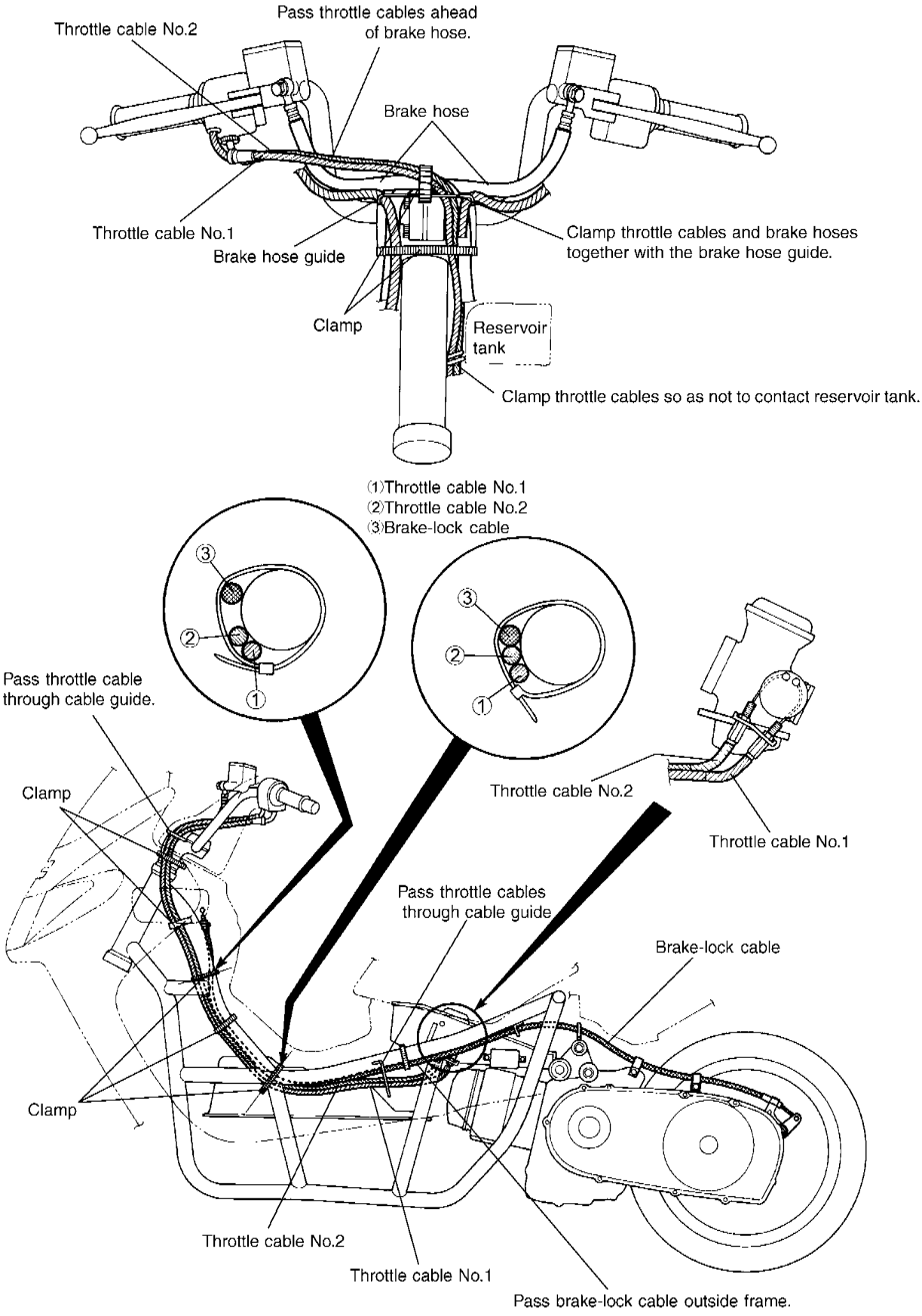

AN250Y (2000-MODEL)

This chapter describes service data, service specifications and servicing procedures which differ from those of the AN250W/X ('98/'99-model).

NOTE:
- *Any differences between the AN250W/X (1998/1999-model) and AN250Y (2000-model) in specifications and service data are indicated with an asterisk mark (*).*
- *Please refer to the chapters 1 through 9 for details which are not given in this chapter.*

CONTENTS

SPECIFICATIONS

DIMENSIONS AND DRY MASS

Overall length	2 260 mm
Overall width	765 mm
Overall height	* 1 365 mm
Wheelbase	1 590 mm
Ground clearance	* 120 mm
Dry mass	* 166 kg

ENGINE

Type	Four-stroke, OHC
Number of cylinders	1
Bore	73.0 mm
Stroke	59.6 mm
Displacement	249 cm^3
Corrected compression ratio	10.5 : 1
Carburetor	KEIHIN CVK30, single
Air cleaner	Plyurethane foam element
Starter system	Electric starter
Lubrication system	Wet sump

TRANSMISSION

Clutch	Dry shoe, automatic, centrifugal type
Raduction ratio	Variable change (2.047 – 0.085)
Final reduction ratio	8.066 (44/16 × 44/15)
Drive system	V-belt drive

CHASSIS

Front suspension	Telescopic, coil spring, oil damped
Rear suspension	Link type, gas/coil spring, gas/oil damped, spring pre-load 7-way adjustable
Caster	27°
Trail	106 mm
Steering angle	40° (left & right)
Turning radius	2.8 m
Front tire size	110/90-13M/C 55P
Rear tire size	130/70-13M/C 63P
Front brake	Disc brake
Combination brake	Disc brake

ELECTRICAL

Ignition type	Electronic ignition (Transistorized)
Ignition timing	10° B.T.D.C. at 1 500 rpm
Spark plug	NGK CR8EK or DENSO U24ETR
Battery	* 12 V 28.8 kC (8 Ah)/10 HR
Generator	Three-phase A.C. Generator
Fuse	30/15/15/10/15/10 A
Headlight	12 V 60/55 W (H4)
Position light	12 V 5 W
Turn signal light	12 V 21 W × 4
Brake light/taillight	12 V 21/5 W × 2
Speedometer light	12 V 1.7 W × 2
High beam indicator light	12 V 1.7 W
Turn signal indicator light	12 V 1.7 W × 2
Coolant temperature gauge light	12 V 1.7 W
Fuel level gauge light	12 V 1.7 W
Trunk light	12 V 2 W
Brake lock indicator light	12 V 1.7 W

CAPACITIES

Fuel tank	13.0 L
Engine oil, oil change	1 900 ml
with filter change	2 000 ml
Final gear oil	190 ml
Coolant	1 500 ml

COUNTRY AND AREA CODES

The following codes stand for the applicable country (-ies) and area (-s).

CODE	COUNTRY or AREA
E-02	UK
E-04	France
E-18	Swizerland, Austria (E-39)
E-22	Germany
E-34	Italy, Belgium (E-21), Spain (E-53)

PAIR (AIR SUPPLY) SYSTEM FOR E-18 AND E-34 (AN250R)

HOSE AND PIPE INSPECTION

- Inspect the hoses (① and ②) and pipe ③ for wear or damage.
- Inspect that the hose and pipe are securely connected.

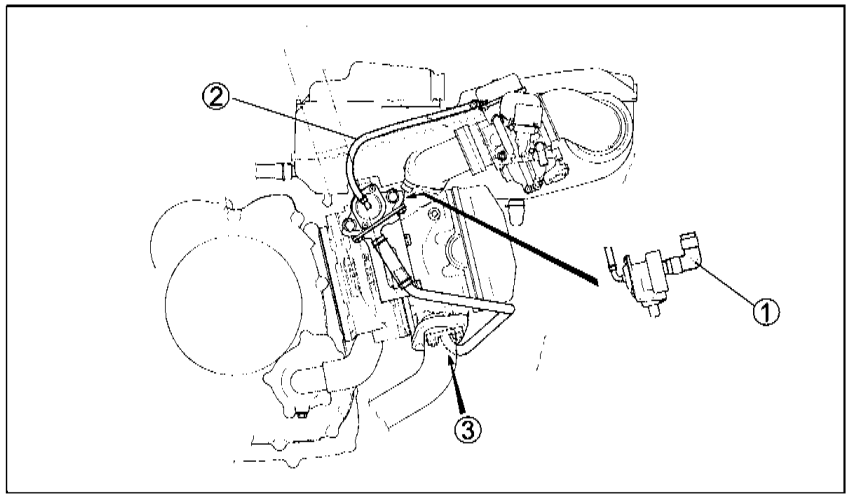

PAIR CONTROL VALVE INSPECTION

- Inspect that air flows through the PAIR control valve air inlet port Ⓐ to the air outlet port Ⓑ. If air does not flow out, replace the PAIR control valve with a new one.

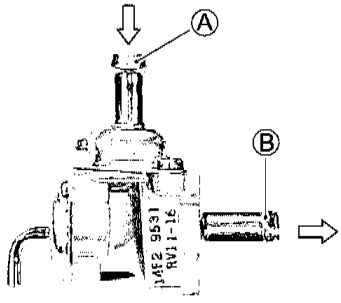

- Connect the vacuum pump gauge to the vacuum port of the control valve as shown in the photograph.
- Apply negative pressure slowly to the control valve and inspect the air flow. If air does not flow out, the control valve is in normal condition. If the control valve does not function, replace it with a new one.

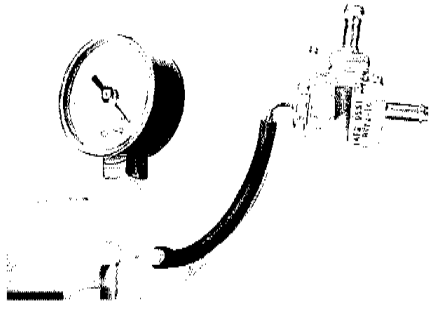

DATA Negative pressure range: 37.3 – 60 kPa (280 – 450 mmHg)

TOOL 09917-47010: Vacuum pump gauge

⚠ CAUTION

Use a hand operated vacuum pump to prevent the control valve damage.

CARBURETOR

CARBURETOR HEATER INSPECTION

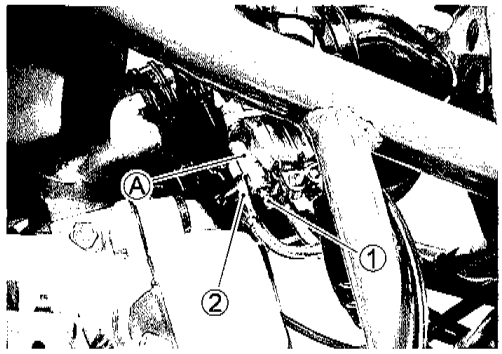

- Disconnect the carburetor heater terminal lead wires.
- Connect the positive ⊕ terminal of a 12 V battery to the terminal ① of the carburetor heater and the battery negative ⊖ terminal to the terminal ②.
- Check that the heater section Ⓐ is heated in 5 minutes after the battery has been connected.
- Measure the resistance between the terminals.

DATA Carbaretor heater resistance STD: 12 – 18 Ω

TOOL 09900-25008: Multi-circuit tester

Tester knob indication: Resistance (Ω)

THERMO-SWITCH INSPECTION

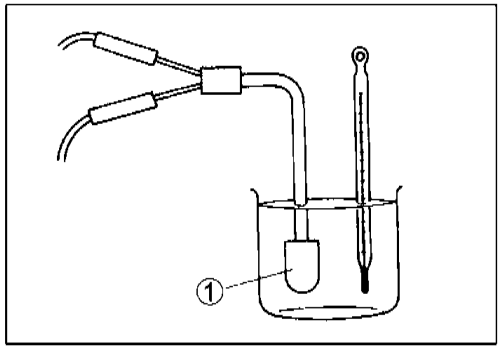

- Cool the thermo-switch ① with ice water and check for continuity.

TOOL 09920-25008: Multi-circuit tester

DATA

Thermo-switch continuty	Below 8 – 14°C	Yes
	Above 15 – 21°C	No

PTC HEATER RESISTOR INSPECTION

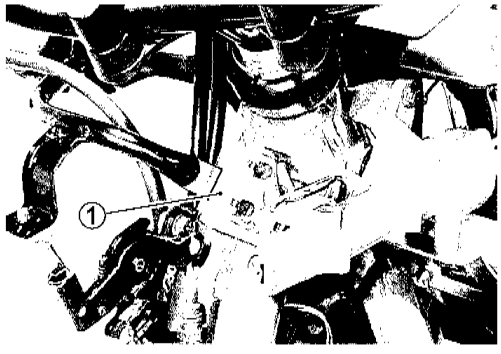

- Remove the front box.
- Disconnect the lead wires from the PTC heater resistor ①.
- Measure the resister resistance.

DATA PTC heater resistance: 7.2 – 8.8 Ω

TOOL 09900-25008: Multi-circuit tester

Tester knob indication: Resistance (Ω)

PILLION FOOTREST BOARD

- Remove the pillion footrest board as shown in the following illustration.

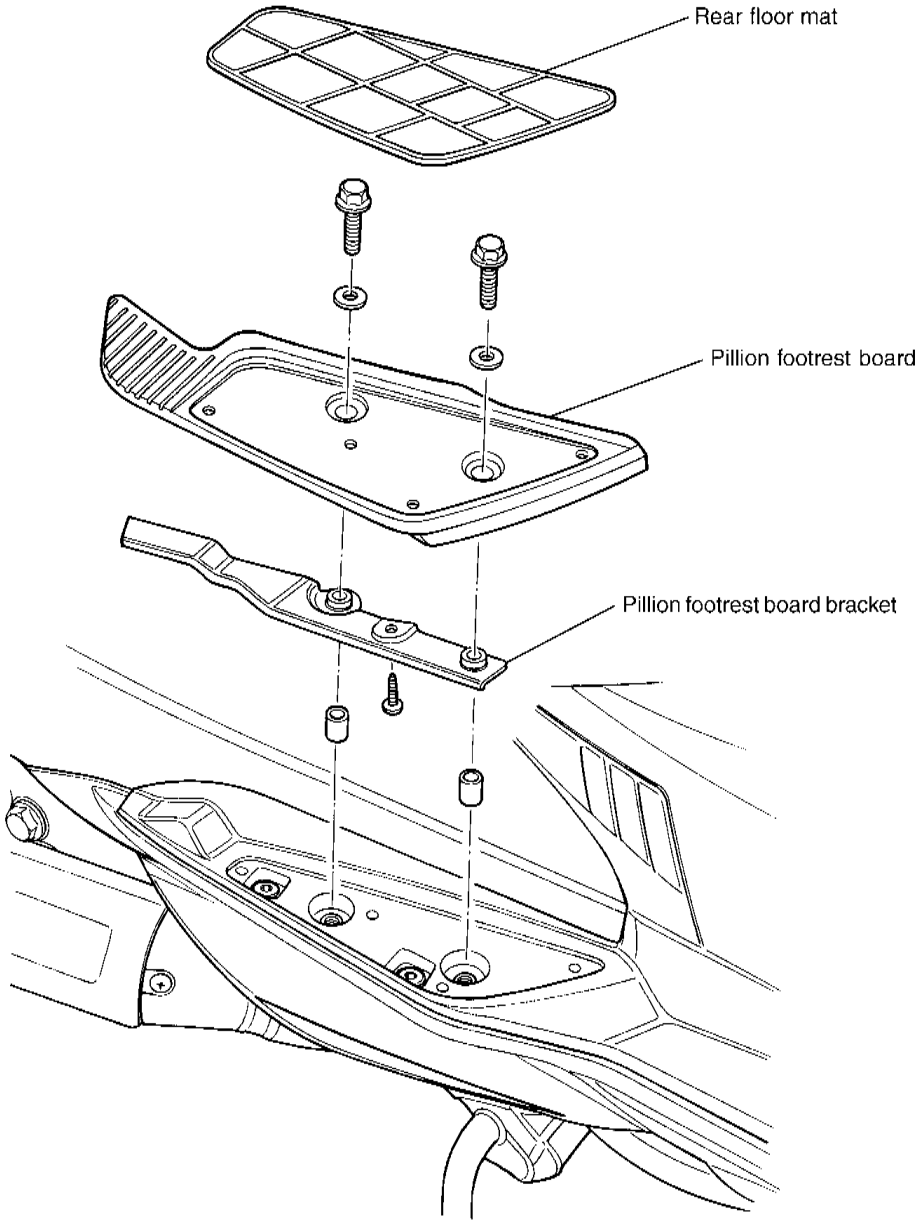

FRONT FORK

FRONT FORK SPRING

Measure the free length of the front fork spring.
If the length is found shorter than the service limit, replace the spring.

DATA Front fork spring free length
Service Limit : 323 mm

FRONT FORK OIL

- With the inner tube in fully compressed position, pour the specified amount of fork oil and stroke the tube several times to expel air.

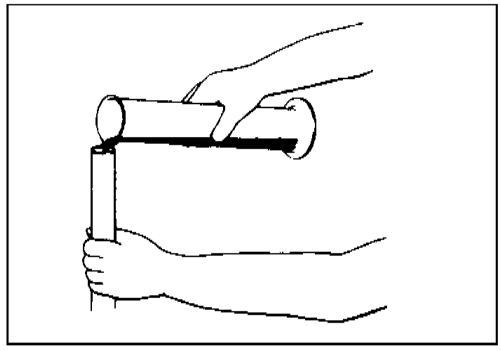

FORK 99000-99044-10G: FORK OIL #10

DATA Capacity (each leg): 281 ml

- With the front fork held in vertical position, compress the inner tube all the way.
- Wait until the fluid level stabilizes, measure and adjust the level to specification using the special tool.

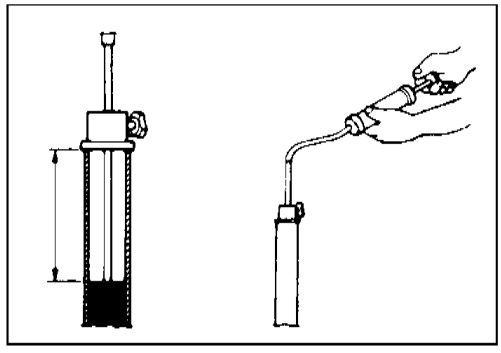

DATA Oil level (without spring): 96 mm

TOOL 09943-74111: Front fork oil level gauge

REAR WHEEL

- Apply a small quantity of engine oil to the thread of the axle.
- Position the rear wheel and install the washer ① and rear axle nut ②.
- Tighten the rear axle nut ② to the specified torque.

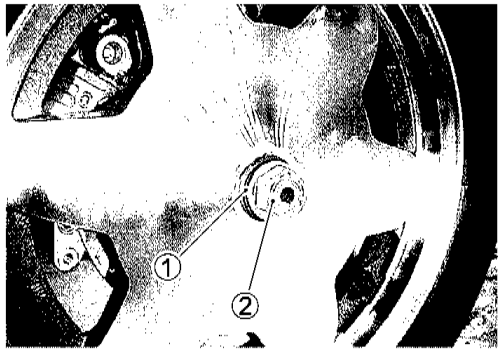

Rear axle nut: 120 N·m (12.0 kgf·m)

NOTE:
A self-lock nut is used for the rear axle nut. Limit the repeated usage of this nut to the maximum of 2 – 3 times.

BATTERY

RECHARGING

- Using the pocket tester, check the battery voltage. If the voltage reading is less than the 12.0V, recharge the battery with a battery charger.
- When recharging the battery, remove the battery from the motorcycle.
- Practice the standard charging unless otherwise necessary.

Recharging	
Standard	0.9 A × 5 – 10 hours
Quick	4 A × 1 hour

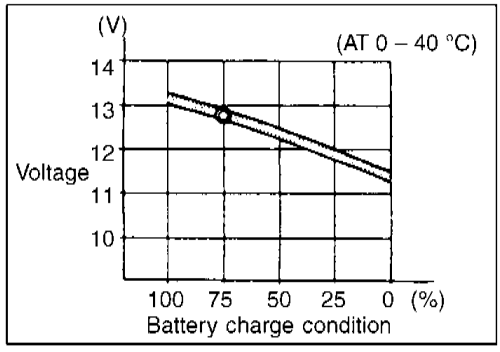

- After recharging, wait for more than 30 minutes and check the battery voltage with a pocket tester.
- If the battery voltage is less than the 12.5V, recharge the battery again in the same condition. If battery voltage is still less than 12.5V after recharging, replace the battery with a new one.

NOTE:
When the motorcycle is not used for a long period, check the battery every 1 month to prevent the battery from deterioration.

⚠ CAUTION

The charging system on this model is designed for MF battery and therefore do not use a battery of other specification.

WIRING DIAGRAM

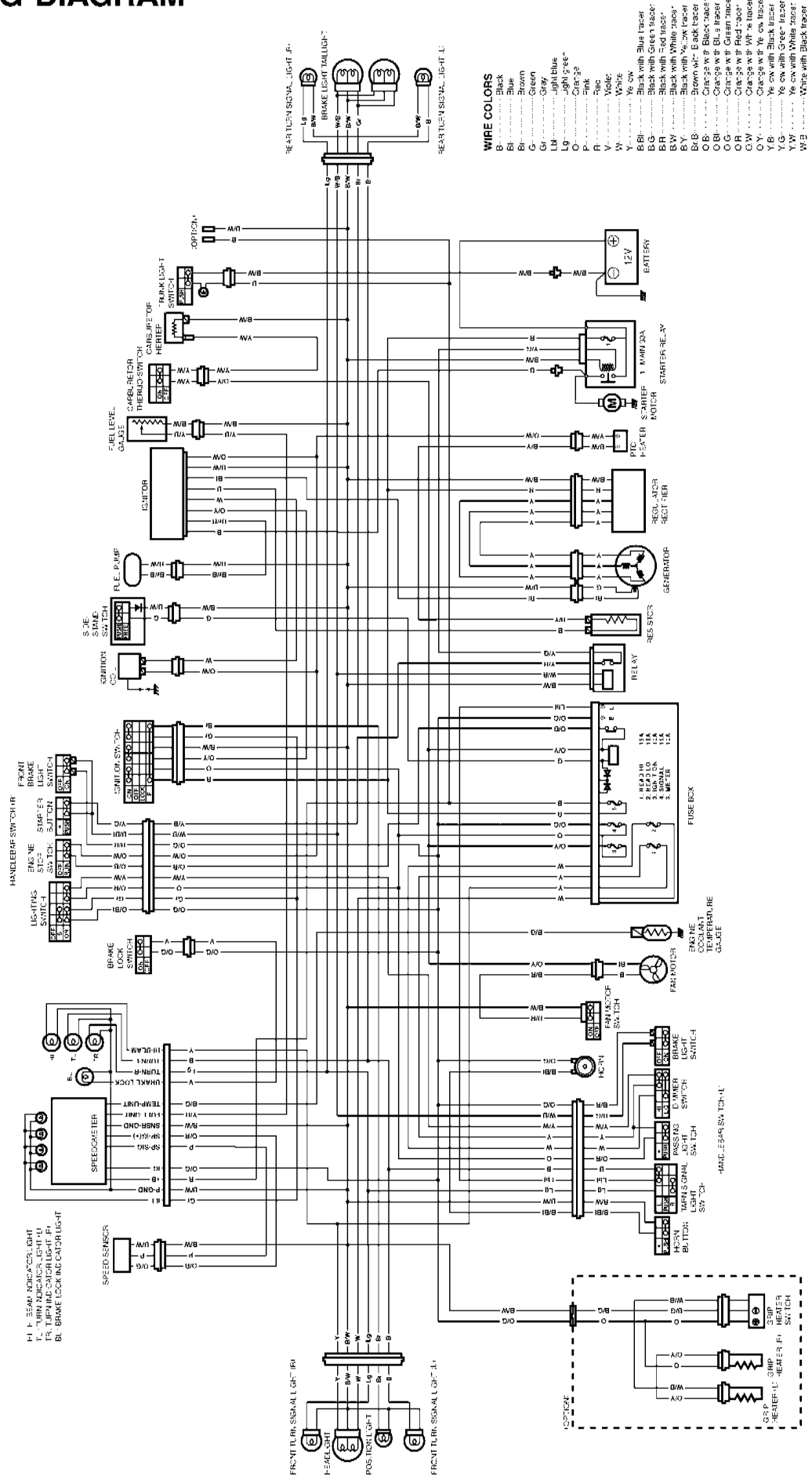

WIRE HARNESS, CABLE AND HOSE ROUTING

WIRE HARNESS ROUTING

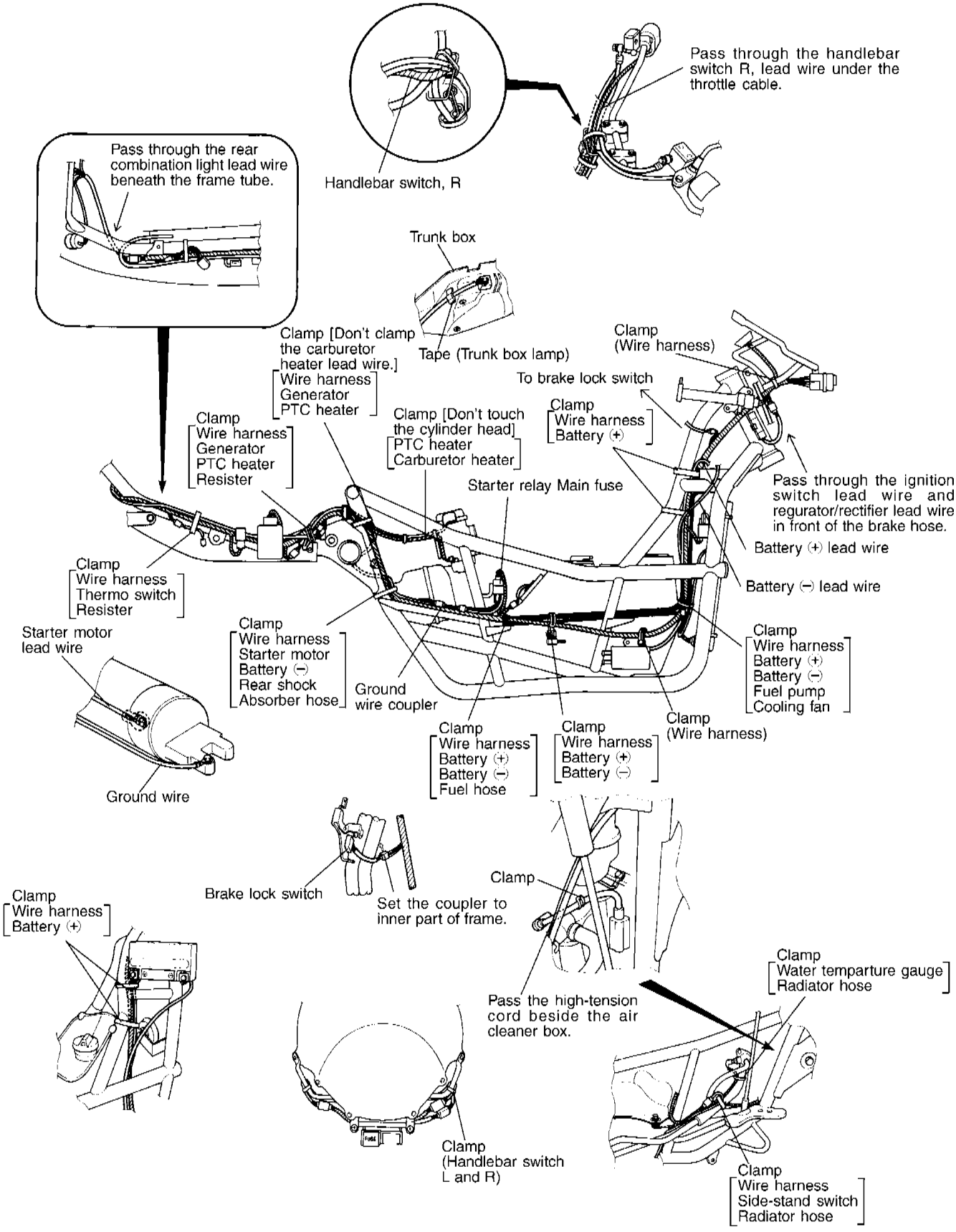

PAIR (AIR SUPPLY) HOSE ROUTING FOR E-18 AND E-34 (AN250R)

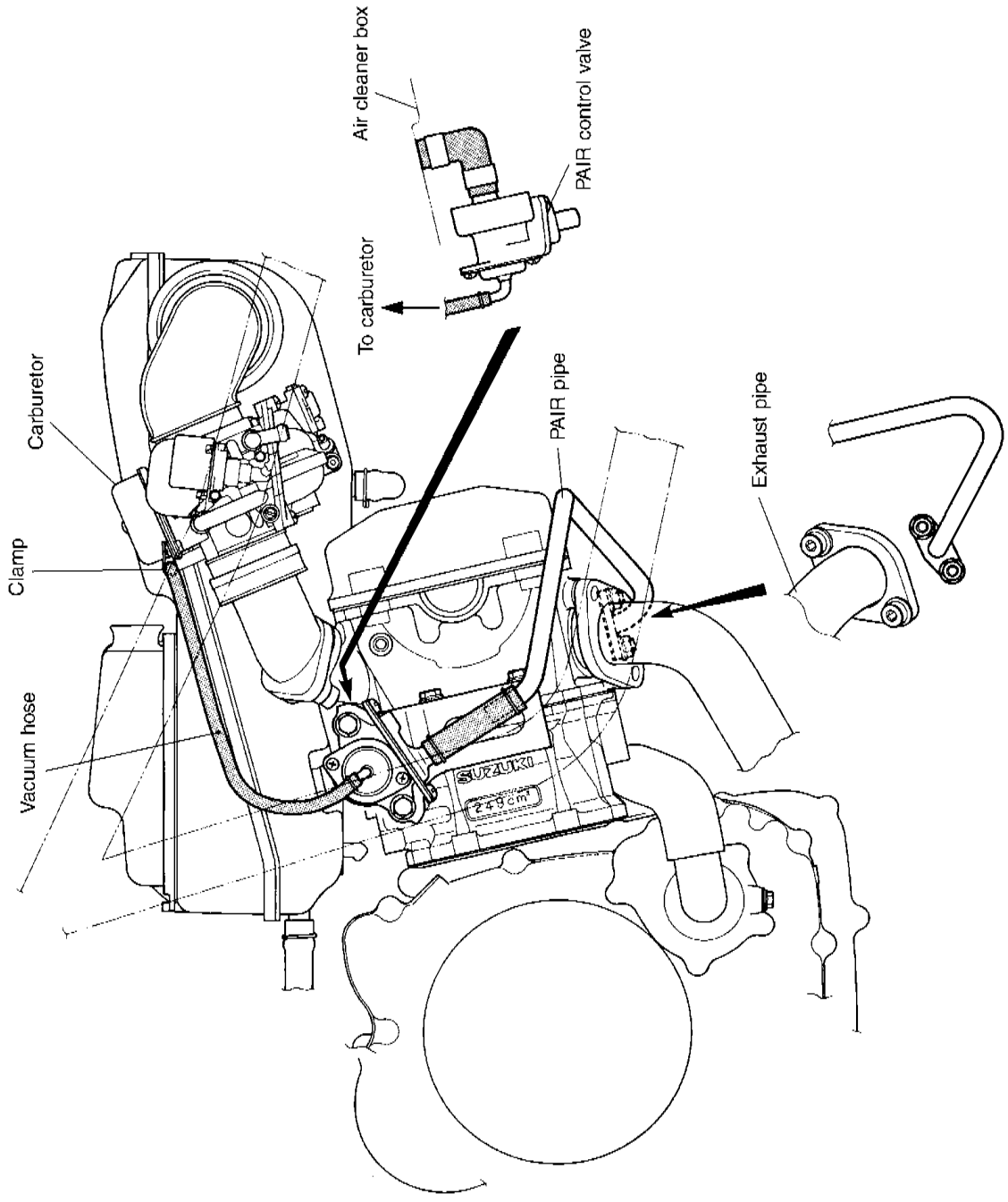

FUEL HOSE ROUTING

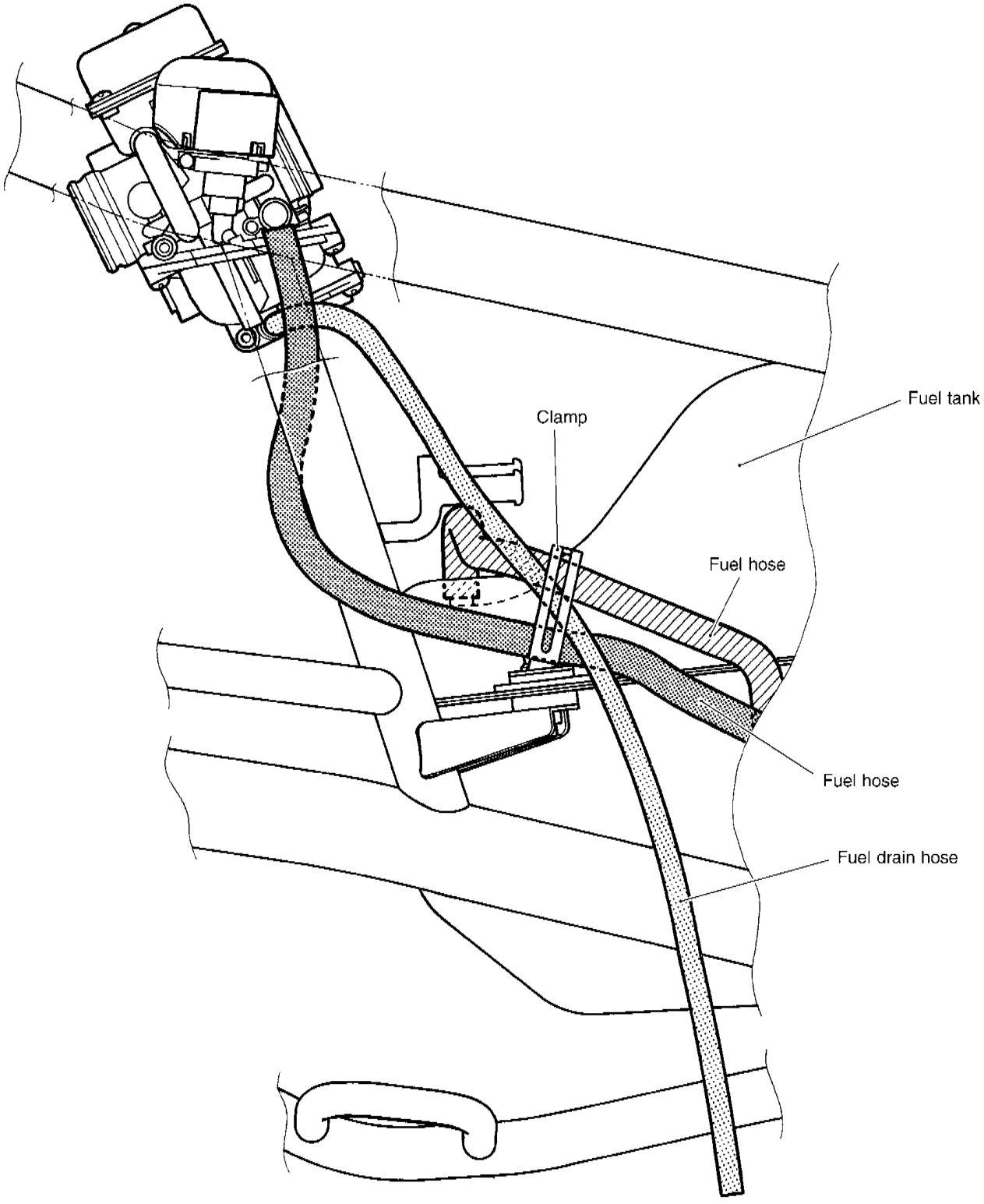

SIDE-STAND SET-UP

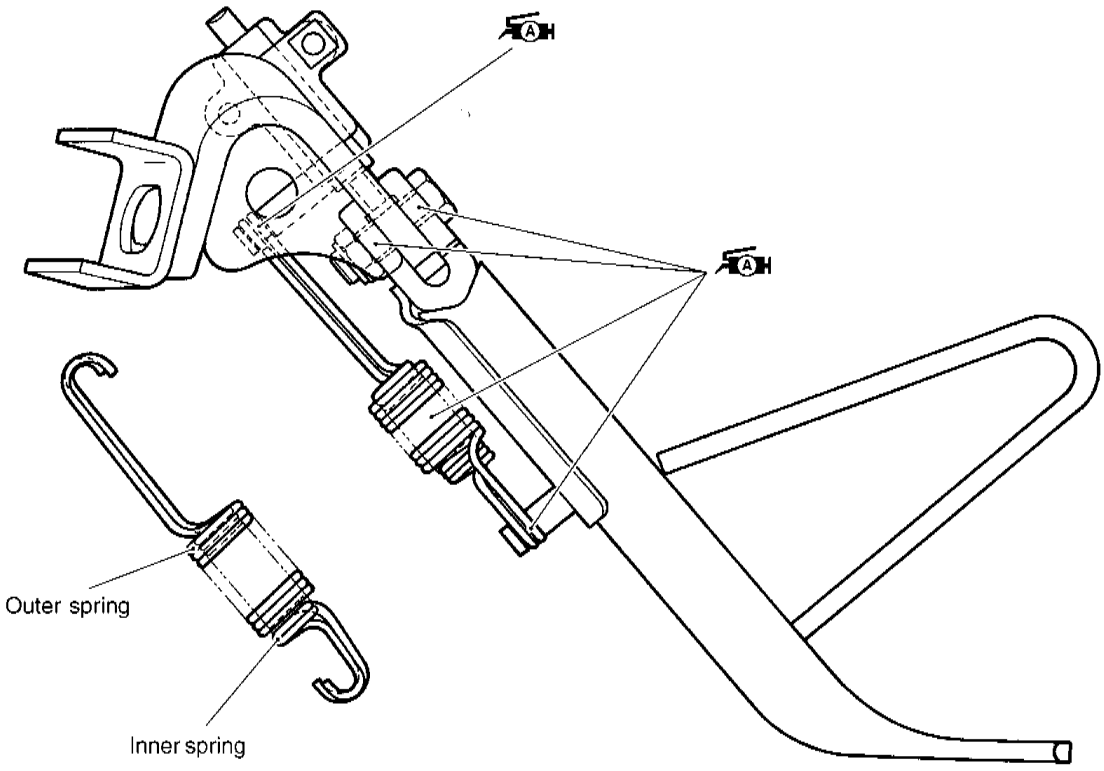

CENTER STAND SET-UP

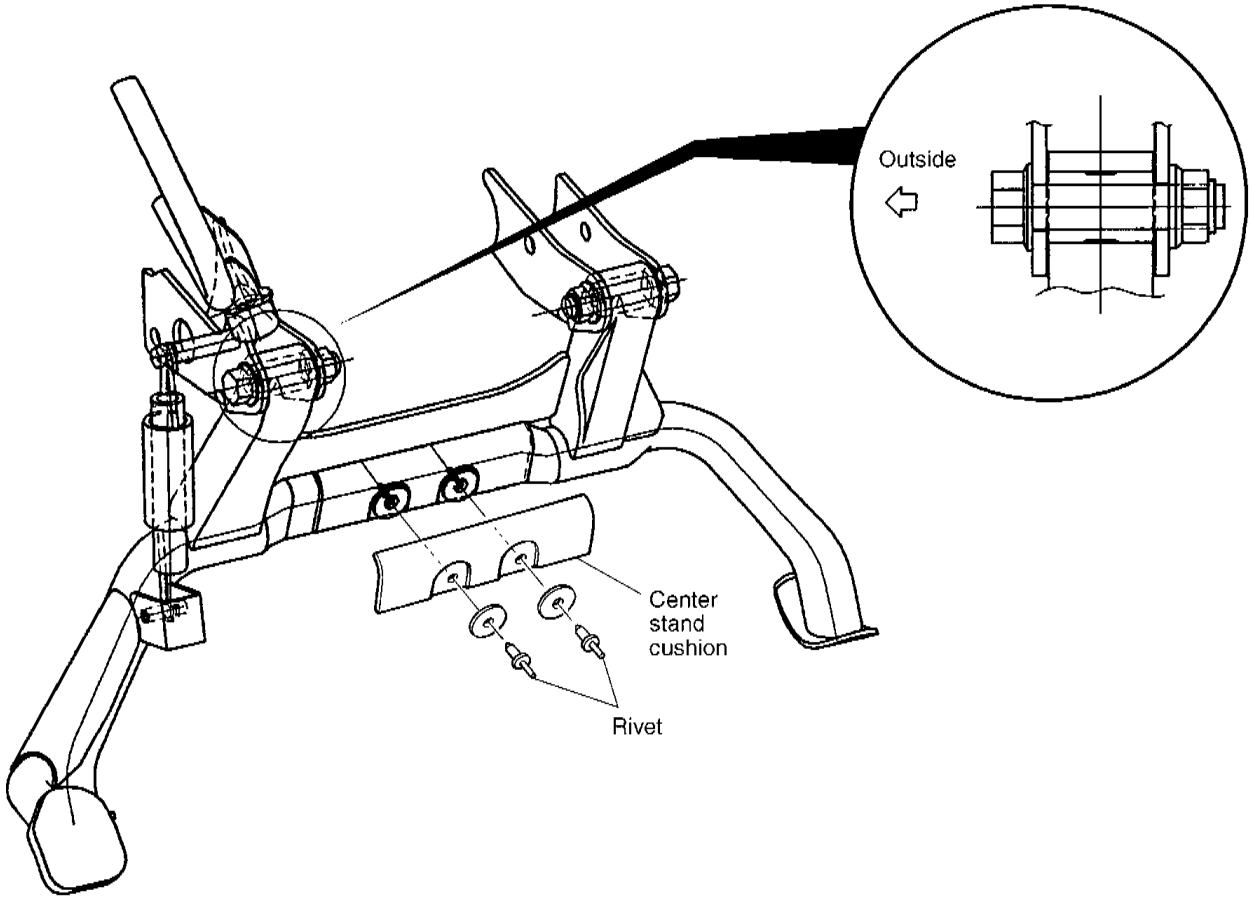

TIGHTENING TORQUE

CHASSIS

ITEM	N·m (kgf·m)
Front axle	65 (6.5)
Axle pinch bolt	23 (2.3)
Steering stem lock nut	30 (3.0)
Handlebar holder clamp bolt	23 (2.3)
Handlebar set bolt	10 (1.0)
Handlebar clamp bolt	23 (2.3)
Front fork cap bolt	45 (4.5)
Front fork clamp bolt	23 (2.3)
Brake master cylinder bolt	10 (1.0)
Brake hose union bolt	23 (2.3)
Brake caliper mounting bolt	25 (2.5)
Brake air bleeder valve	7.5 (0.75)
Brake disc bolt	23 (2.3)
Rear axle nut	*120 (12.0)
Rear shock absorber bolt	50 (5.0)
Cushion lever mounting nut	78 (7.8)
Cushion lever nut	50 (5.0)
Cushion rod nut	50 (5.0)

TIGHTENING TORQUE CHART

For other bolts and nuts listed previously, refer to this chart:

Bolt Diameter Ⓐ (mm)	Conventional or "4" marked bolt		"7" marked bolt	
	N·m	kgf·m	N·m	kgf·m
4	1.5	0.15	2.3	0.23
5	3	0.3	4.5	0.45
6	5.5	0.55	10	1.0
8	13	1.3	23	2.3
10	29	2.9	50	5.0
12	45	4.5	85	8.5
14	65	6.5	135	13.5
16	105	10.5	210	21.0
18	160	16.0	240	24.0

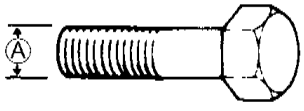

Conventional bolt

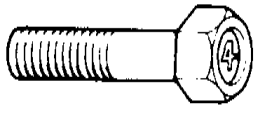

"4" marked bolt

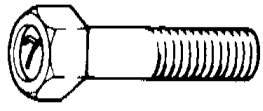

"7" marked bolt

SERVICE DATA

VALVE + GUIDE

Unit: mm

ITEM	STANDARD		LIMIT
Valve diam.	IN.	28.3	———
	EX.	25.0	———
Valve clearance (when cold)	IN.	0.08 – 0.13	———
	EX.	0.17 – 0.22	———
Valve guide to valve stem clearance	IN.	0.010 – 0.037	———
	EX.	0.030 – 0.057	———
Valve stem deflection	IN. & EX.	———	0.35
Valve guide I.D.	IN. & EX.	5.000 – 5.012	———
Valve stem O.D.	IN.	4.975 – 4.990	———
	EX.	4.955 – 4.970	———
Valve stem runout	IN. & EX.	———	0.05
Valve head thickness	IN. & EX.	———	0.5
Valve stem end length	IN. & EX.	———	1.8
Valve seat width	IN. & EX.	0.9 – 1.1	———
Valve head radial runout	IN. & EX.	———	0.03
Valve spring free length (IN. & EX.)	INNER	———	34.9
	OUTER	———	38.2
Valve spring tension (IN. & EX.)	INNER	5.3 – 6.5 kgf at length 28 mm	———
	OUTER	13.1 – 15.1 kgf at length 31.5 mm	———

CAMSHAFT + CYLINDER HEAD

Unit: mm

ITEM	STANDARD		LIMIT
Cam height	IN.	33.43 – 33.47	33.13
	EX.	33.50 – 33.54	33.20
Camshaft journal oil clearance	ϕ 22	0.032 – 0.066	0.150
	ϕ 17.5	0.028 – 0.059	0.150
Camshaft journal holder I.D.	ϕ 22	22.012 – 22.025	———
	ϕ 17.5	17.512 – 17.525	———
Camshaft journal O.D.	ϕ 22	21.959 – 21.980	———
	ϕ 17.5	17.466 – 17.484	———
Rocker arm I.D.	IN. & EX.	12.000 – 12.018	———
Rocker arm shaft O.D.	IN. & EX.	11.973 – 11.984	———
Cylinder head distortion	———		0.05

CYLINDER + PISTON + PISTON RING

Unit: mm

ITEM	STANDARD			LIMIT
Compression pressure	1 480 kPa (14.8 kgf/cm²)			1 030 kPa (10.3 kgf/cm²)
Piston to cylinder clearance	0.040 – 0.050			0.120
Cylinder bore	73.000 – 73.015			73.090
Piston diam.	72.955 – 72.970 Measure at 15 mm from the skirt end.			72.880
Cylinder distortion	———			0.05
Piston ring free end gap	1st	R	Approx. 9.3	7.4
	2nd	R	Approx. 7.2	5.7
Piston ring end gap	1st		0.10 – 0.30	0.5
	2nd		0.35 – 0.50	1.0
Piston ring to groove clearance	1st		———	0.18
	2nd		———	0.15
Piston ring groove width	1st		1.01 – 1.04	———
	2nd		1.01 – 1.04	———
	Oil		2.01 – 2.03	———
Piston ring thickness	1st		0.97 – 0.99	———
	2nd		0.97 – 0.99	———
Piston pin bore	19.002 – 19.008			19.030
Piston pin O.D.	18.996 – 19.000			18.980

CONROD + CRANKSHAFT

Unit: mm

ITEM	STANDARD	LIMIT
Conrod small end I.D.	19.006 – 19.014	19.040
Conrod deflection	———	3.0
Conrod big end side clearance	0.10 – 0.65	1.00
Conrod big end width	21.95 – 22.00	———
Crank web to web width	60.0 ± 0.1	———
Crankshaft runout	———	0.08

OIL PUMP

ITEM	STANDARD	LIMIT
Oil pump reduction ratio	1.470 (25/17)	———
Oil pressure (at 60°C, 140°F)	Above 80 kPa (0.8 kgf/cm²) Below 160 kPa (1.6 kgf/cm²) at 3 000 r/min.	———

CLUTCH

Unit: mm

ITEM	STANDARD	LIMIT
Clutch wheel I.D.	135.00 – 135.20	135.50
Clutch shoe thickness	3.0	2.0
Clutch engagement	2 600 – 3 200 r/min.	———
Clutch lock-up	4 200 – 5 200 r/min.	———

TRANSMISSION

Unit: mm Except ratio

ITEM	STANDARD	LIMIT
Reduction ratio	Variable change 2.047 – 0.805	———
Final reduction ratio	8.066 (44/16 × 44/15)	———
Drive belt width	22.7	21.7
Movable drive face roller O.D.	23.72 – 23.88	———
Movable driven face spring free length	105.2	99.9

CARBURETOR

ITEM		SPECIFICATION			
		E-02,04,34,54	E-22	E-18	AN250R (E-34)
Carburetor type		KEIHIN CVK30	←	←	←
Bore size		30 mm	←	←	←
I.D. No.		14F0	14F2	14F3	14F5
Idle r/min.		1 500 ± 100 r/min.	←	1 500 ± 50 r/min.	1 500 ± 100 r/min.
Float height		18.8 ± 1.0 mm	←	←	←
Main jet	(M.J.)	#105	#108	←	←
Main air jet	(M.A.J.)	Press-fitted	←	←	←
Jet needle	(J.N.)	N7AD	←	←	←
Needle jet	(N.J.)	ϕ 2.1	←	←	←
Throttle valve	(Th.V.)	θ=10°	←	←	←
Pilot jet	(P.J.)	#38	←	#40	←
Pilot screw	(P.S.)	PRE-SET (2¾ turns back)	←	←	←
Throttle cable play		2 – 4 mm	←	←	←

ELECTRICAL

ITEM		SPECIFICATION		NOTE
Ignition timing		10° B.T.D.C. at 1 500 r/min.		
Spark plug		Type	ND: U24ETR NGK: CR8EK	
		Gap	0.6 – 0.7 mm	
Spark performance		Over 8 mm at 1 atm.		
Ignition coil resistance		Primary	3 – 5 Ω	Tester range: (× 1 Ω)
		Secondary	17 – 30 kΩ	Tester range: (× 1 kΩ)
Magneto coil resistance		Pick-up	184 – 276 Ω	Tester range: (× 100 Ω)
Generator no-load voltage		More than 56 V (AC) at 5 000 r/min.		
Regulated voltage		13.5 – 15.0 V at 5 000 r/min.		
Starter relay resistance		2 – 6 Ω		
Battery	Type designation	*FTX9-BS		
	Capacity	*12 V 28.8 kC (8 Ah)/10HR		

ITEM	SPECIFICATION		NOTE
Fuse size	Headlight	HI: 15 A LO: 15 A	
	Turn signal	15 A	
	Ignition	10 A	
	Taillight	10 A	
	Main	30 A	
Carburetor heater coil resistance	12 – 18 Ω		
Fuel level gauge resistance	Full	Approx. 5 Ω	
	Empty	Approx. 103 Ω	

WATTAGE

Unit: W

ITEM		SPECIFICATION
Headlight	HI	60
	LO	55
Position or city light		5
Brake light/taillight		21/5 × 2
Turn signal light		21 × 4
Speedometer light		1.7 × 2
Fuel level meter light		1.7
Engine coolant temp. meter light		1.7
Turn signal indicator light		1.7 × 2
High beam indicator light		1.7
Trunk light		2
Brake lock indicator light		1.7

BRAKE + WHEEL

Unit: mm

ITEM		STANDARD		LIMIT
Brake disc thickness		Front	4.5 ± 0.2	4.0
		Rear	5.0 ± 0.2	4.5
Brake disc runout		Front & Rear	———	0.30
Master cylinder bore		Front	11.000 – 11.043	———
		Rear	14.000 – 14.043	———
Master cylinder piston diam.		Front	10.957 – 10.984	———
		Rear	13.957 – 13.984	———
Brake caliper cylinder bore	Leading	Front	22.650 – 22.700	———
	Trailing		33.960 – 34.010	———
		Rear	25.400 – 25.450	———
Brake caliper piston diam.	Leading	Front	22.568 – 22.618	———
	Trailing		33.878 – 33.928	———
		Rear	25.335 – 25.368	———
Wheel rim runout		Axial	———	2.0
		Radial	———	2.0
Wheel axle runout		Front	———	0.25

ITEM	STANDARD		LIMIT
Tire size	Front	110/90-13 M/C 55P	———
	Rear	130/70-13 M/C 63P	———
Tire type	Front	*HOOP B03 G	———
	Rear	*HOOP B02 G	———
Wheel rim size	Front	13 × MT3.00	———
	Rear	13 × MT3.50	———
Tire tread depth	Front	———	1.6
	Rear	———	2.0

SUSPENSION

Unit: mm

ITEM	STANDARD	LIMIT	NOTE
Front fork stroke	100	———	
Front fork spring free length	*330.4	*323	
Rear wheel travel	100	———	
Front fork oil level	*96	———	

TIRE PRESSURE

COLD INFLATION TIRE PRESSURE	SOLO RIDING		DUAL RIDING	
	kPa	kgf/cm²	kPa	kgf/cm²
FRONT	175	1.75	175	1.75
REAR	200	2.00	280	2.80

FUEL + OIL + ENGINE COOLANT

ITEM	SPECIFICATION		NOTE
Fuel type	Gasoline used should be graded 91 octane or higher. An unleaded gasoline is recommended.		
Fuel tank capacity	13.0 L		
Enigne oil type	SAE 10W/40, API SF or SG		
Engine oil capacity	Change	1 900 ml	
	Filter change	2 000 ml	
	Overhaul	2 300 ml	
Final gearbox oil type	SAE 10W/40, API SF or SG		
Final gearbox oil capacity	Change	190 ml	
	Overhaul	200 ml	
Front fork oil type	Fork oil #10		
Front fork oil capacity (each leg)	*281 ml		
Brake fluid type	DOT 4		
Engine coolant type	Use an anti-freeze/coolant compatible with aluminum radiator, mixed with distilled water only, at the ratio of 50 : 50.		
Engine coolant capacity	Reservoir only	250 ml	
	Without reservoir	1 500 ml	

THERMOSTAT + RADIATOR + FAN

ITEM		STANDARD	LIMIT
Thermostat valve opening temperature		Approx. 75°C (167°F)	———
Thermostat valve lift		Over 3 mm at 90°C (194°F)	———
Radiator cap valve opening pressure		110 kPa (1.1 kgf/cm^2)	———
Cooling fan thermo-switch operating temperature	OFF → ON	Approx. 105°C (221°F)	———
	ON → OFF	Approx. 100°C (212°F)	———
Engine coolant temperature sensor resistance	50°C (122°F)	140 – 310 Ω	———
	115°C (239°F)	24.1 – 28.2 Ω	———

AN250K1 (2001-MODEL)

This chapter describes service data, service specifications and servicing procedures which differ from those of the AN250W/X/Y ('98/'99/2000-model).

NOTE:
- *Any differences between the AN250W/X/Y ('98/'99/2000-model) and AN250K1 (2001-model) in specifications and service data are indicated with an asterisk mark (*).*
- *Please refer to the AN250W/X/Y ('98/'99/2000-model) Service Manual for details which are not given in this manual.*

CONTENTS

GENERAL INFORMATION

INFORMATION LABELS

①	Warning safety label
②	Engine starting label
③	Screen warning label
④	Tire pressure label
⑤	Fuel cauting label (E-02)
⑥	Loading capacity label
⑦	ID plate

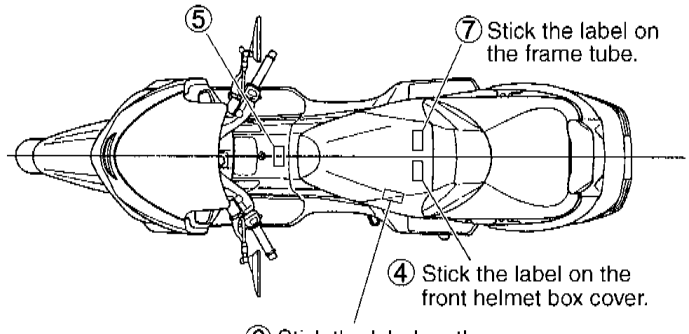

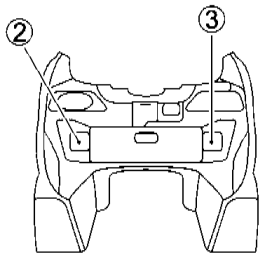

Front box

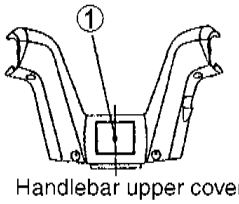

Handlebar upper cover

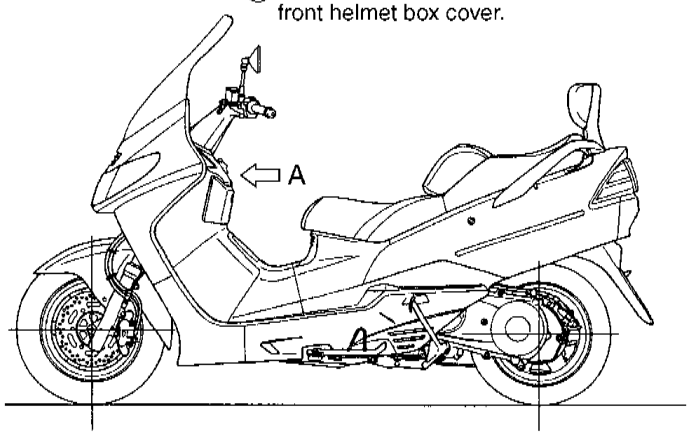

VIEW OF A

COUNTRY AND AREA CODES

The following codes stand for the applicable country (-ies) and area (-s).

CODE	COUNTRY or AREA
E-02	UK
E-19	EU
E-54	Israel

SPECIFICATIONS

DIMENSIONS AND DRY MASS

Overall length	2 260 mm
Overall width	765 mm
Overall height	1 365 mm
Wheelbase	1 590 mm
Ground clearance	120 mm
Dry mass	166 kg

ENGINE

Type	Four-stroke, OHC
Number of cylinders	1
Bore	73.0 mm
Stroke	59.6 mm
Displacement	249 cm^3
Corrected compression ratio	10.5 : 1
Carburetor	KEIHIN CVK30, single
Air cleaner	Plyurethane foam element
Starter system	Electric starter
Lubrication system	Wet sump

TRANSMISSION

Clutch	Dry shoe, automatic, centrifugal type
Raduction ratio	* Variable change (2.417 – 0.836)
Final reduction ratio	8.066 (44/16 × 44/15)
Drive system	V-belt drive

CHASSIS

Front suspension	Telescopic, coil spring, oil damped
Rear suspension	Link type, gas/coil spring, gas/oil damped, spring pre-load 7-way adjustable
Caster	27°
Trail	106 mm
Steering angle	40° (left & right)
Turning radius	2.8 m
Front tire size	110/90-13M/C 55P
Rear tire size	130/70-13M/C 63P
Front brake	Disc brake
Combination brake	Disc brake

ELECTRICAL

Ignition type	Electronic ignition (Transistorized)
Ignition timing	*7° B.T.D.C. at 1 500 rpm
Spark plug	NGK CR8EK or DENSO U24ETR
Battery	12 V 28.8 kC (8 Ah)/10 HR
Generator	Three-phase A.C. Generator
Fuse	30/15/15/10/15/10 A
Headlight	12 V 60/55 W (H4)
Position light	12 V 5 W
Turn signal light	12 V 21 W × 4
Brake light/taillight	12 V 21/5 W × 2
License plate light	*12 V 5 W
Trunk light	12 V 5 W
Speedometer light	12 V 1.7 W × 2
High beam indicator light	12 V 1.7 W
Turn signal indicator light	12 V 1.7 W × 2
Coolant temperature gauge light	12 V 1.7 W
Fuel level gauge light	12 V 1.7 W
Trunk light	12 V 2 W
Brake lock indicator light	12 V 1.7 W

CAPACITIES

Fuel tank	13.0 L
Engine oil, oil change	1 900 ml
with filter change	2 000 ml
Final gear oil	190 ml
Coolant	1 500 ml

PERIODIC MAINTENANCE

VALVE CLEARANCE ADJUSTMENT PROCEDURE

- Open the seat.
- Remove the helmet box front cover ①.

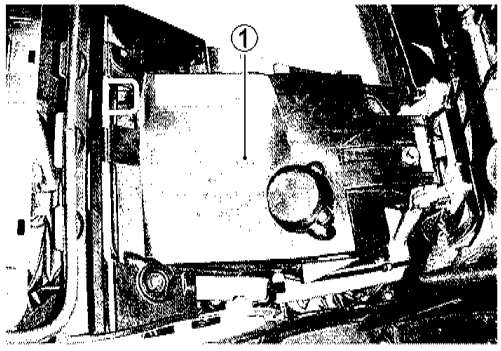

- Loosen the clamp screw and then disconnect the air cleaner outlet tube ②.
- Remove the carburetor ③ by disconnecting the fuel hose, throttle cable and carburetor heater lead wire (if equipped).

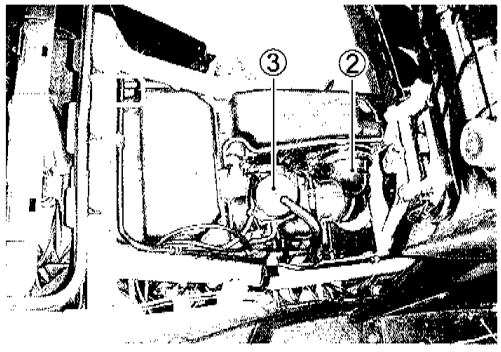

- Remove the air cleaner center mounting bolt ④ and then lift the air cleaner box.
- Remove the cylinder head cover.

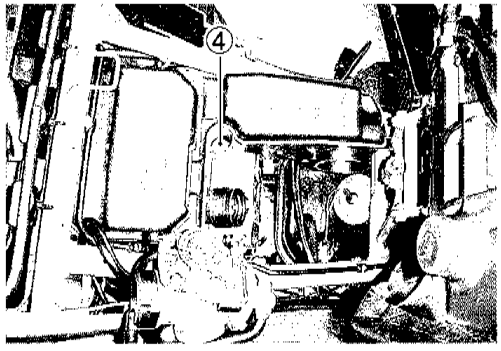

- Inspect the IN. and EX. valve clearances. (☞2-3)
- If the clearance is out of specification, bring it into the specified range.

DATA Valve clearance (when cold)
IN. : 0.08 – 0.13 mm
EX. : 0.17 – 0.22 mm

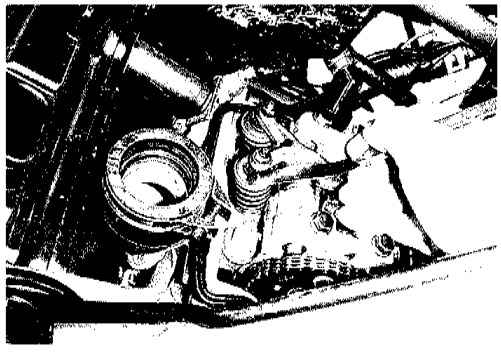

- Reassembling procedures refer to the service manual.

COOLING FAN FILTER

Clean Every 3000 km.

- Remove the left side leg shield. (☞11-17)
- Remove the cooling fan cover ①.

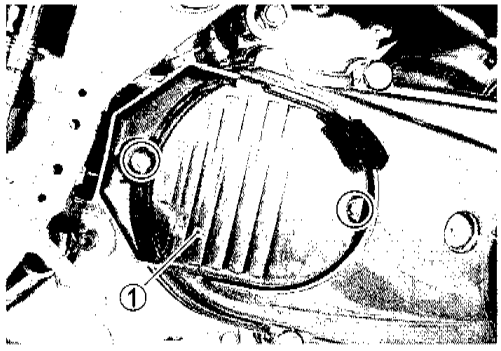

- Remove the cooling fan filter ②.
- Clean the fan filter.
- Reinstall the cleaned or new filter in the reverse order of removal.

⚠ CAUTION

Do not apply oil or water to the fan filter.

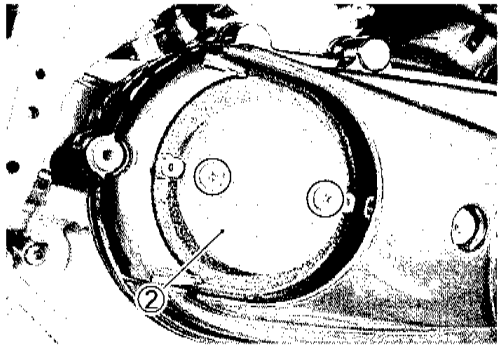

REAR SHOCK ABSORBER ADJUSTMENT

- Keep the motorcycle upright.
- With the fastners removed, remove the lower rear shock absorber cover.
- Adjust the spring pre-load with the tool.
  STD: 3rd position

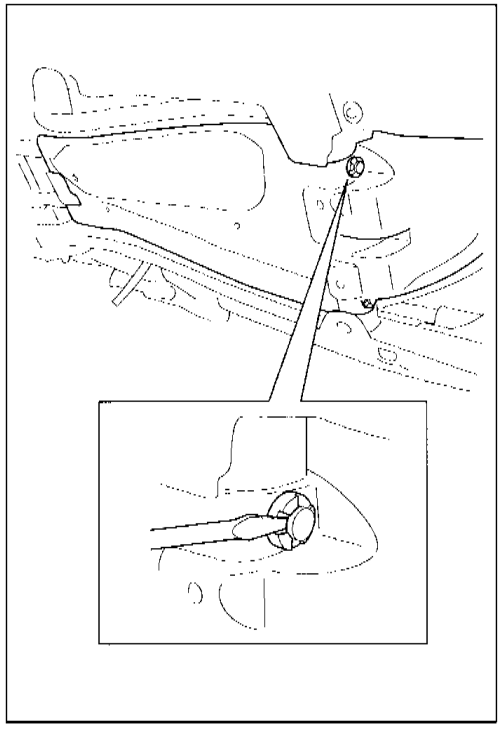

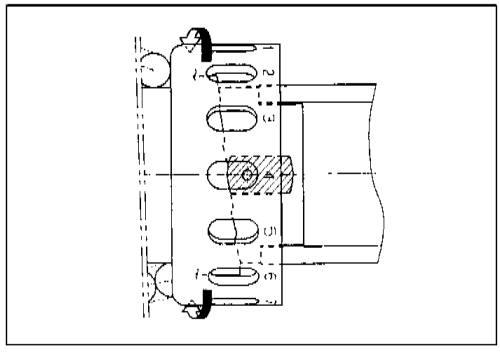

BRAKE-LOCK INSPECTION

Inspect that it is possible to pull the brake-lock lever from 2 to 3 steps, and then the rear wheel is locked up when moving the motorcycle forward.

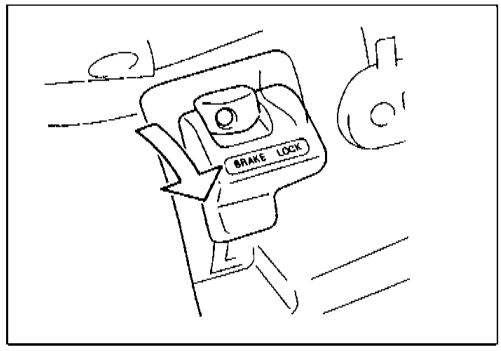

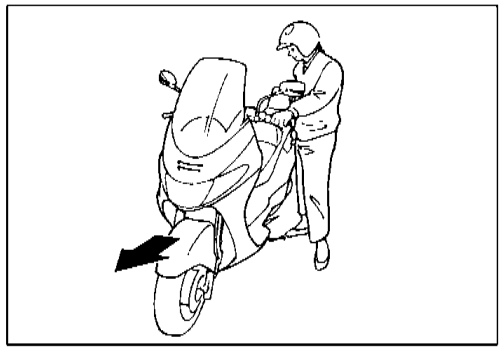

BRAKE-LOCK ADJUSTMENT

- Pull the brake-lock lever by one step (one notch).

NOTE:

The brake-lock lever have 8 steps (8 notchs) when pulling in full.

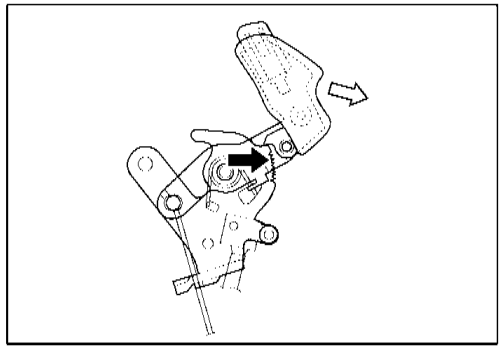

- With the lock nut ① loosening, adjust the adjuster bolt ② in until the brake pad comes in contact with brake disk.
- Tighten the lock nut ①.

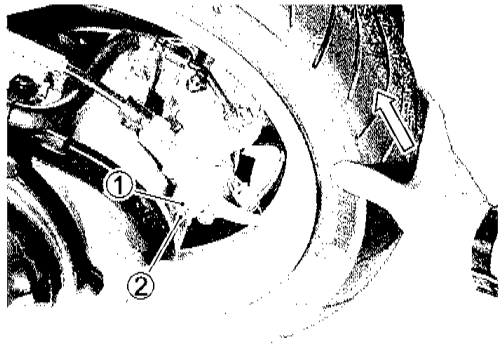

- Return the brake-lock lever to original position and inspect the brake-lock.

⚠ CAUTION

After the brake-lock adjustment, inspect the brake fluid level of combination brake.

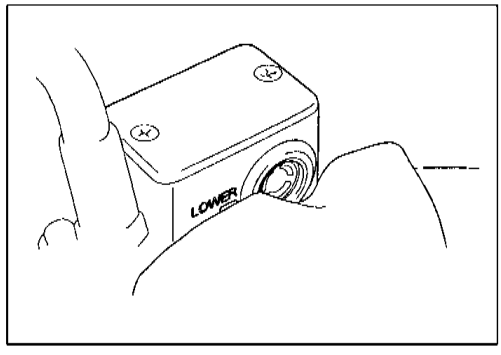

ENGINE

ENGINE REINSTALLATION

- Install the engine mounting bolt and nut following illustration.

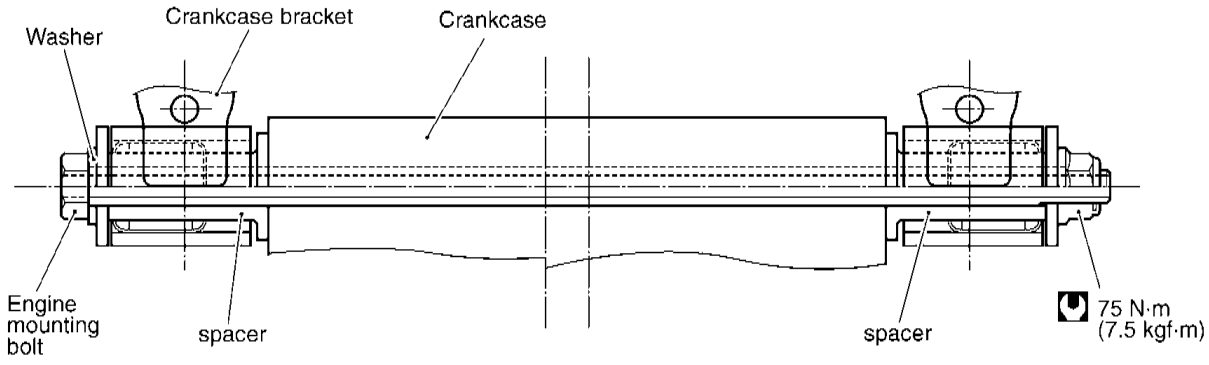

DRIVE V-BELT INSPECTION

Check that the V-belt is free from any greasy substance.
Check the contact surface for crack or other damage.
Measure the width of the belt using the vernier calipers.
If the measurement exceeds the service limit or crack or other damage exists, replace the belt with a new one.

Service Limit: 21.6 mm

TOOL 09900-20102: Vernier Calipers

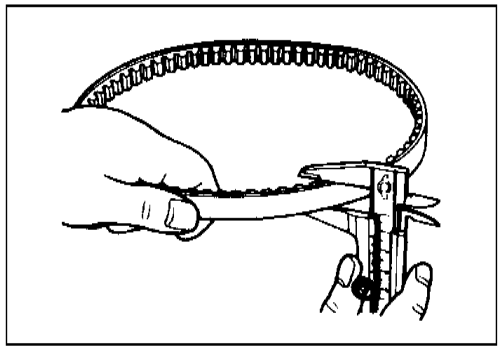

⚠ CAUTION

If grease or oil is present on the surface, degrease the belt thoroughly.

MOVABLE DRIVEN FACE ASSEMBLY/ CLUTCH SHOE

REASSEMBLY

NOTE :

To assemble the clutch shoe assembly, reverse the sequence of the disassembly procedures taking care of the following instructions.

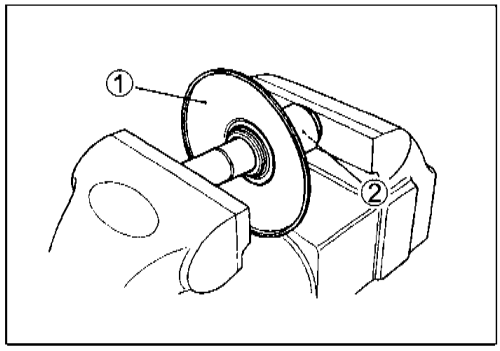

- Install the bearing ② to the fixed driven face ①.

TOOL 09910-70210: Bearing installer set (ϕ 35)

- Install the circlip ③.

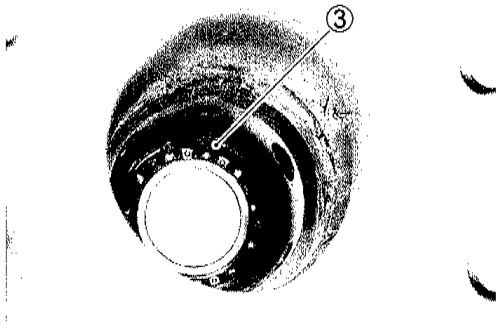

⚠ CAUTION

Position the sealed side of the bearing toward outside.

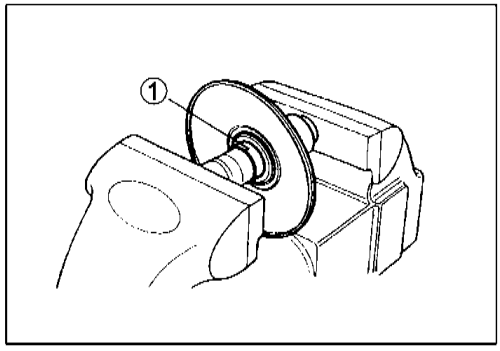

- Fit the needle bearing ①.

TOOL 09910-70210: Bearing installer set (ϕ 40)

⚠ CAUTION

Position the needle bearing with its punch mark outside. Apply sufficient grease both to the grease groove and needle bearing inside the fixed driven face.

99000-25010: SUZUKI SUPER GREASE "A"

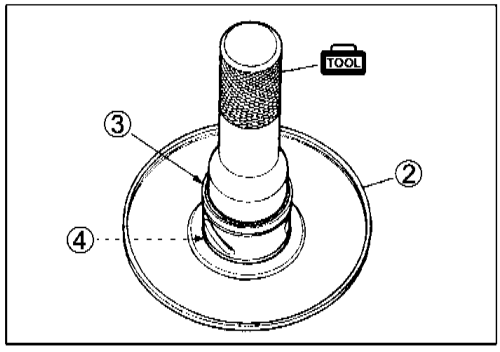

- Install the new oil seals ③ and ④ to both sides of the movable driven face ②.

TOOL 09913-76010: Bearing installer

⚠ CAUTION

*** Position the stamped code side outside.**
*** Apply sufficient grease to both the oil seal lips all around and the grease groove inside the movable driven face.**

99000-25010: SUZUKI SUPER GREASE "A"

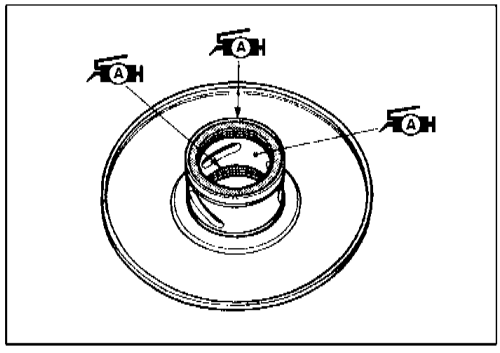

- Install the movable driven face onto the fixed driven face.

⚠ CAUTION

To prevent the oil seal lip from damage during installation, slide the lip using a piece of 0.1 mm-thick steel sheet as a guide.

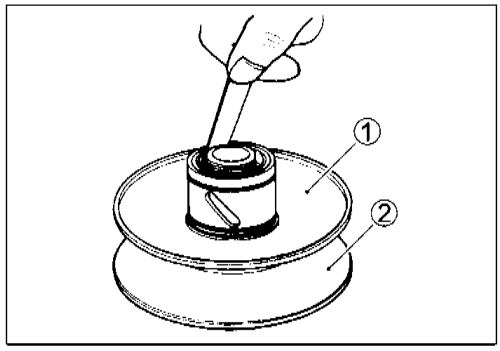

- Align the punch mark Ⓐ of fixed driven face with hole Ⓑ of movable driven face.

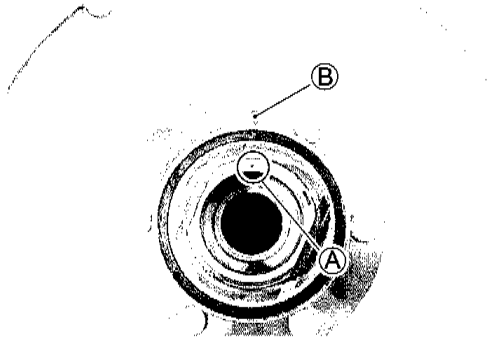

- Install the new O-rings.
- Install the pin to the pin hole with the roller fitted.
- Apply a small amount of grease to the O-ring and the pin hole.

99000-25010: SUZUKI SUPER GREASE "A"

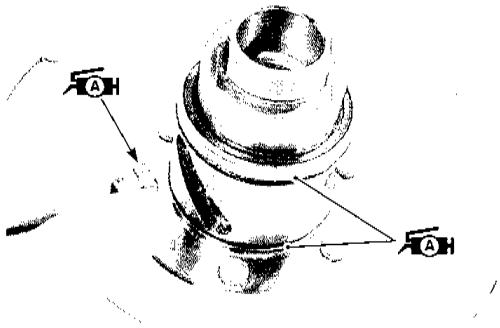

- Install the movable driven face seat and align the hole Ⓒ of movable driven face seat with hole Ⓑ of movable driven face.

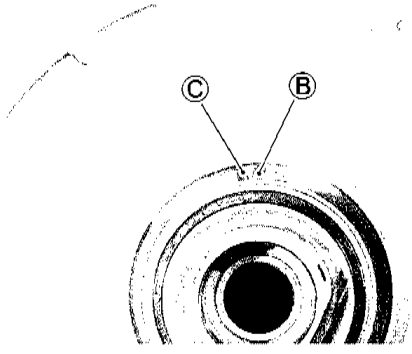

- Install each spring hooks to hole Ⓑ, Ⓒ and hole Ⓓ of clutch shoe plate.

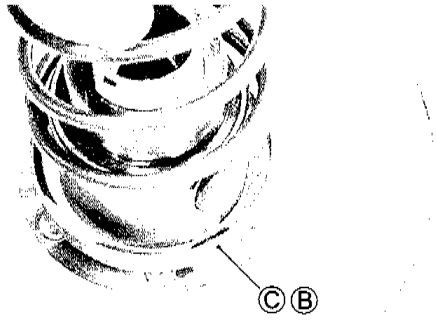

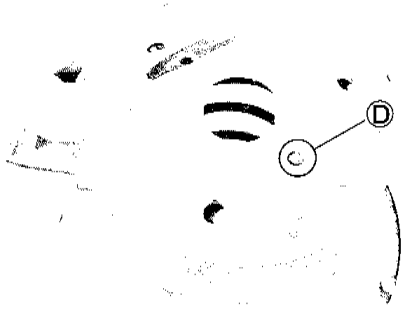

- Slowly turn the special tool handle to tighten, turn the clutch shoe counterclockwise and align the flats at the movable driven face end with clutch shoe plate hole.

TOOL 09922-31420: Clutch spring compressor

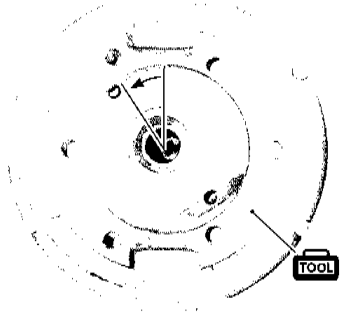

- Tighten the nut with the special tool to the specified torque.

TOOL 09924-52410: Wrench set

Clutch shoe nut: 78 N·m (7.8 kgf·m)

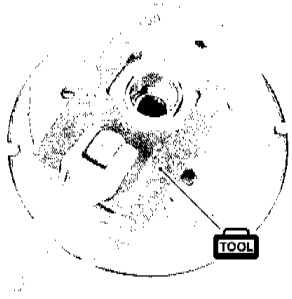

CHASSIS

EXTERIOR PARTS REMOVAL/REMOUNTING

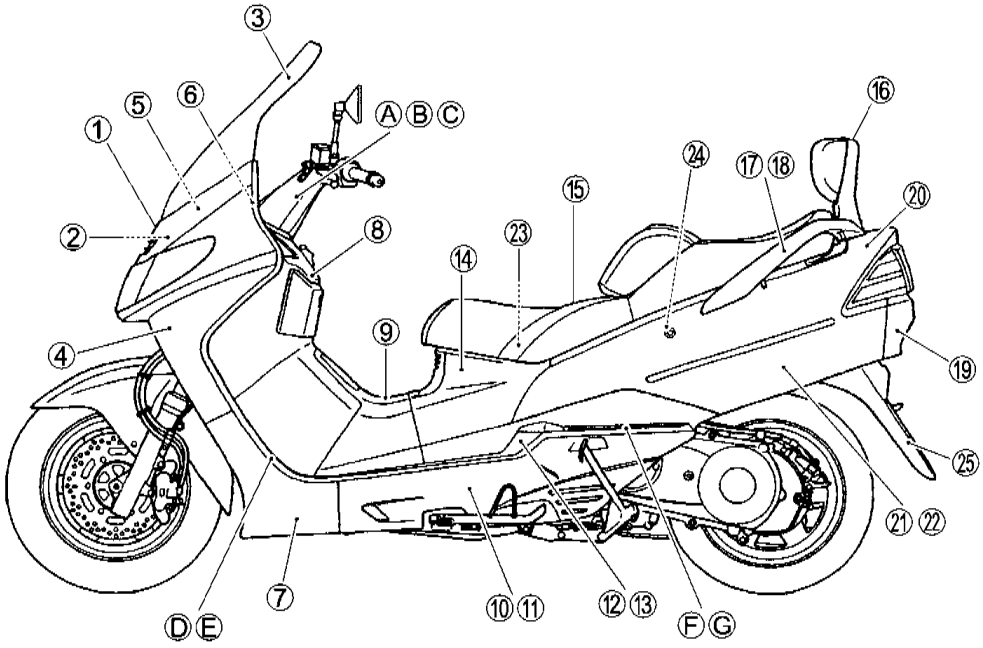

REMOVAL PROCEDURE FLOW CHART

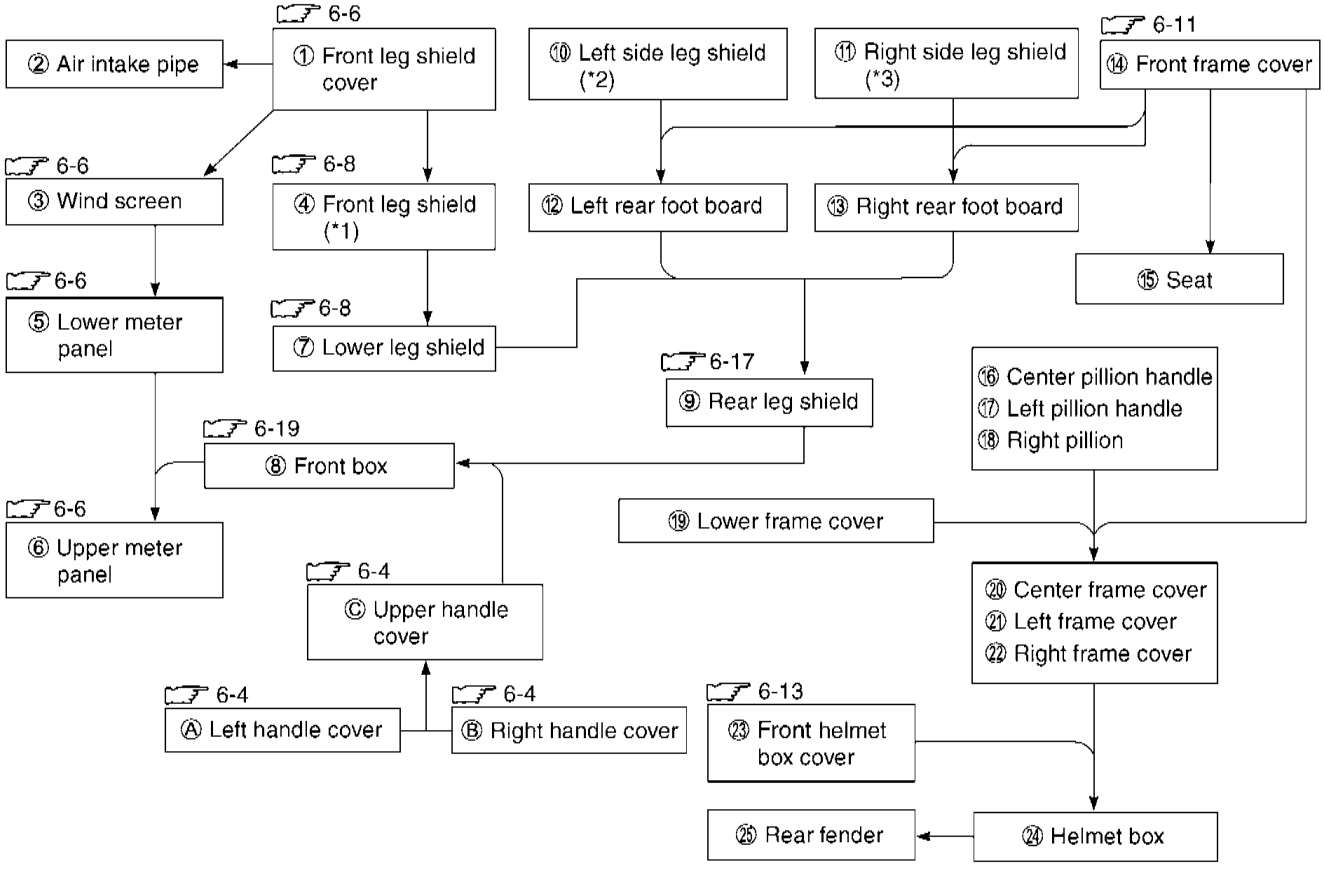

*1: Also remove front floor mats Ⓓ and Ⓔ. (☞ 6-5)
*2: Also remove left floor mats (front and rear) Ⓔ and Ⓖ. (☞ 6-5)
*3: Also remove right floor mats (front and rear) Ⓓ and Ⓕ. (☞ 6-5)

CONSTRUCTION

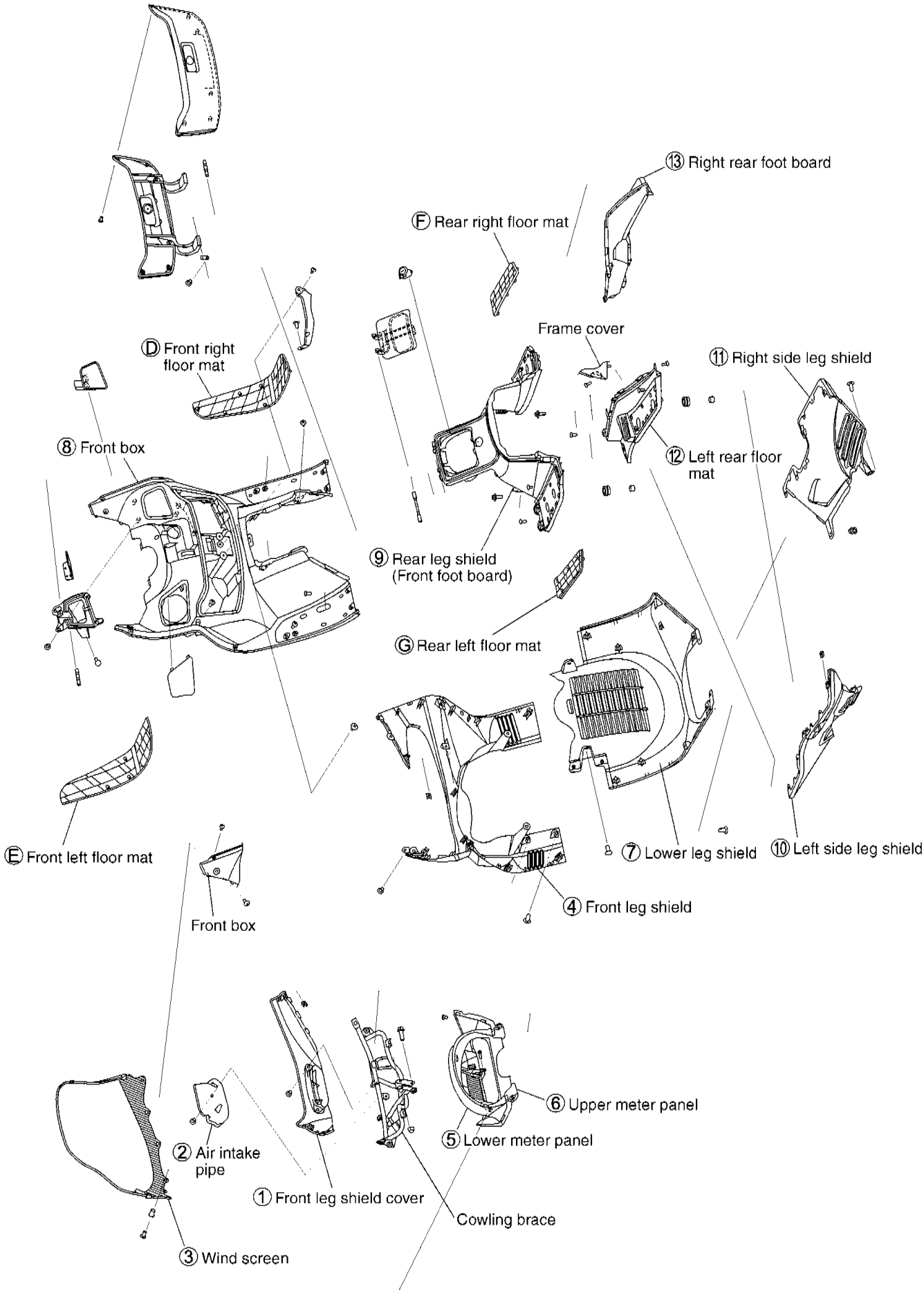

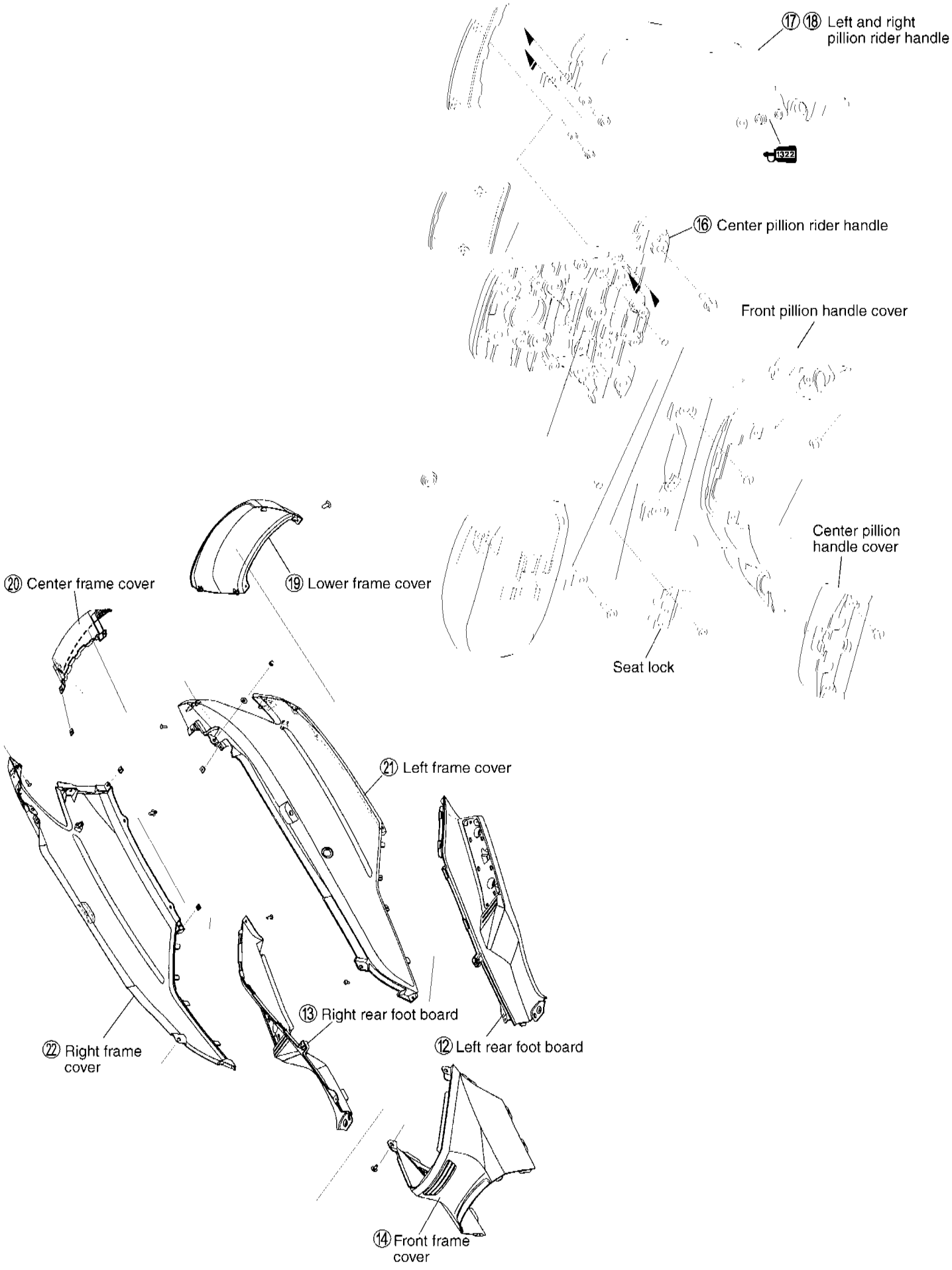
⑰ ⑱ Left and right pillion rider handle
⑯ Center pillion rider handle
Front pillion handle cover
Center pillion handle cover
Seat lock
⑳ Center frame cover
⑲ Lower frame cover
㉑ Left frame cover
⑬ Right rear foot board
⑫ Left rear foot board
㉒ Right frame cover
⑭ Front frame cover

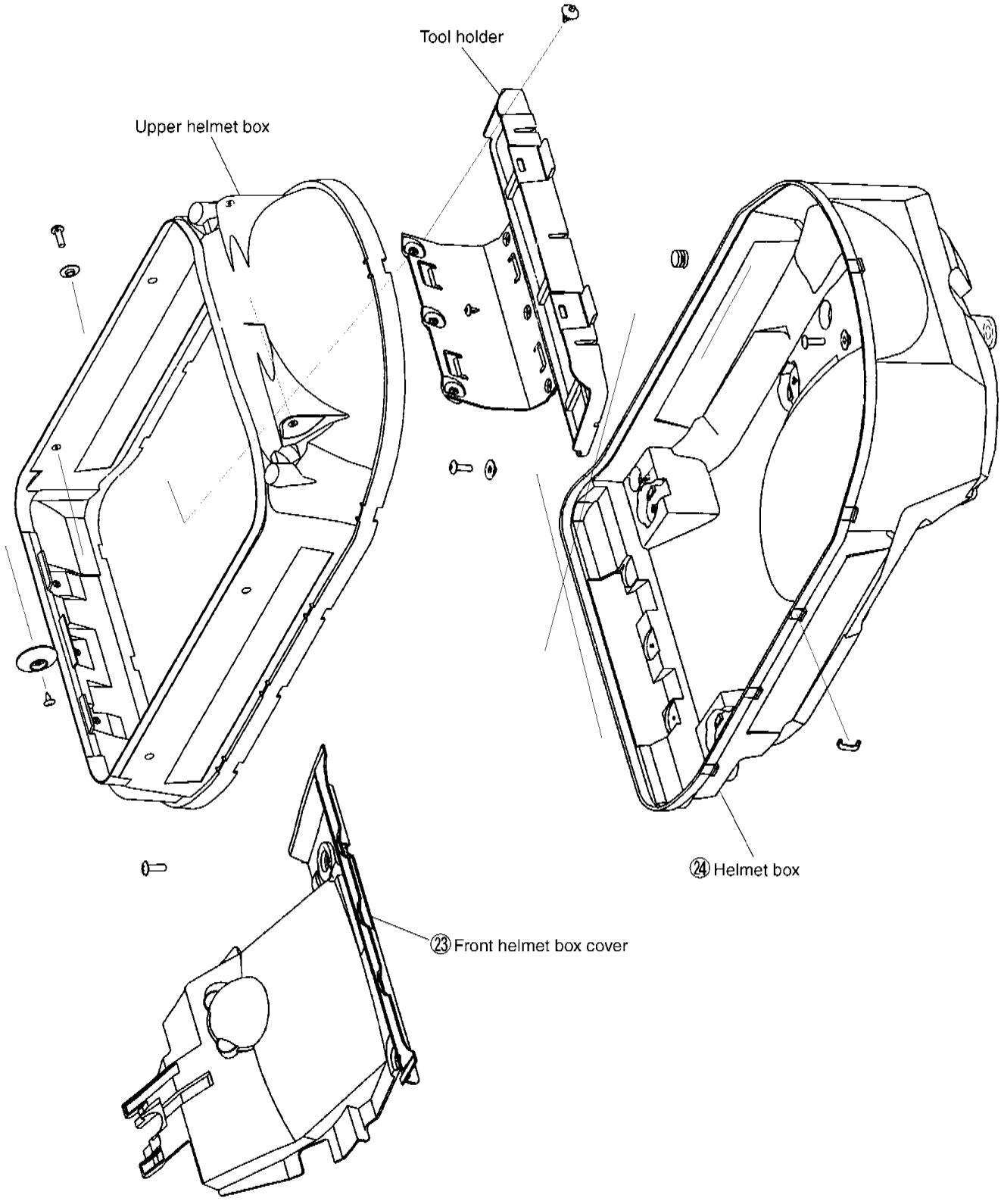
Tool holder
Upper helmet box
㉔ Helmet box
㉓ Front helmet box cover

AIR INTAKE PIPE

- Remove the front leg shield cover. (☞ 6-6)
- Remove the screw.

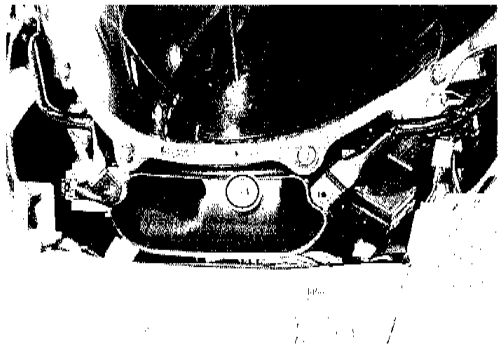

- Remove the air intake pipe.

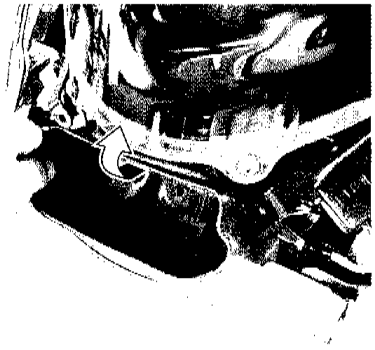

AIR INTAKE SLIDER

- Upper and lower meter panel removal. (☞ 6-7)
- Install the air intake slider to the upper meter panel as shown in right photo.

- Align the air intake slider with hole of lower meter panel, assemble the upper meter panel and lower meter panel.

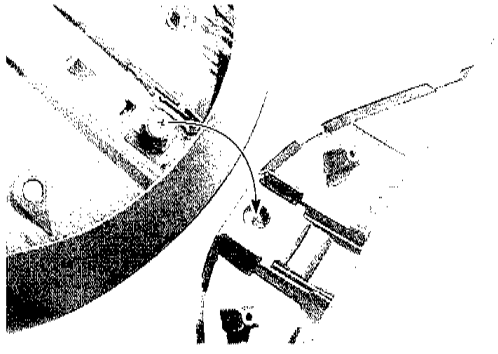

- Check that the air intake slider and shutter operate smoothly, and it stop at three point, open, middle and close.

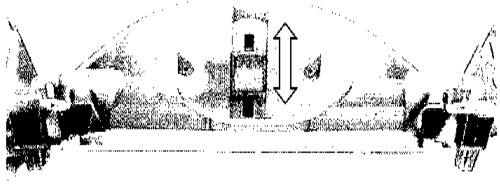

LEFT AND RIGHT SIDE LEG SHIELD

- Remove the front and rear floor mat.
- With all attaching screws and fastener removed, detach the left and right side leg shield.

NOTE:

- *With the head of fastener center piece pulled, remove the fastener Ⓐ.*
- *Insert the flat screwdriver and draw out the hook Ⓑ.*

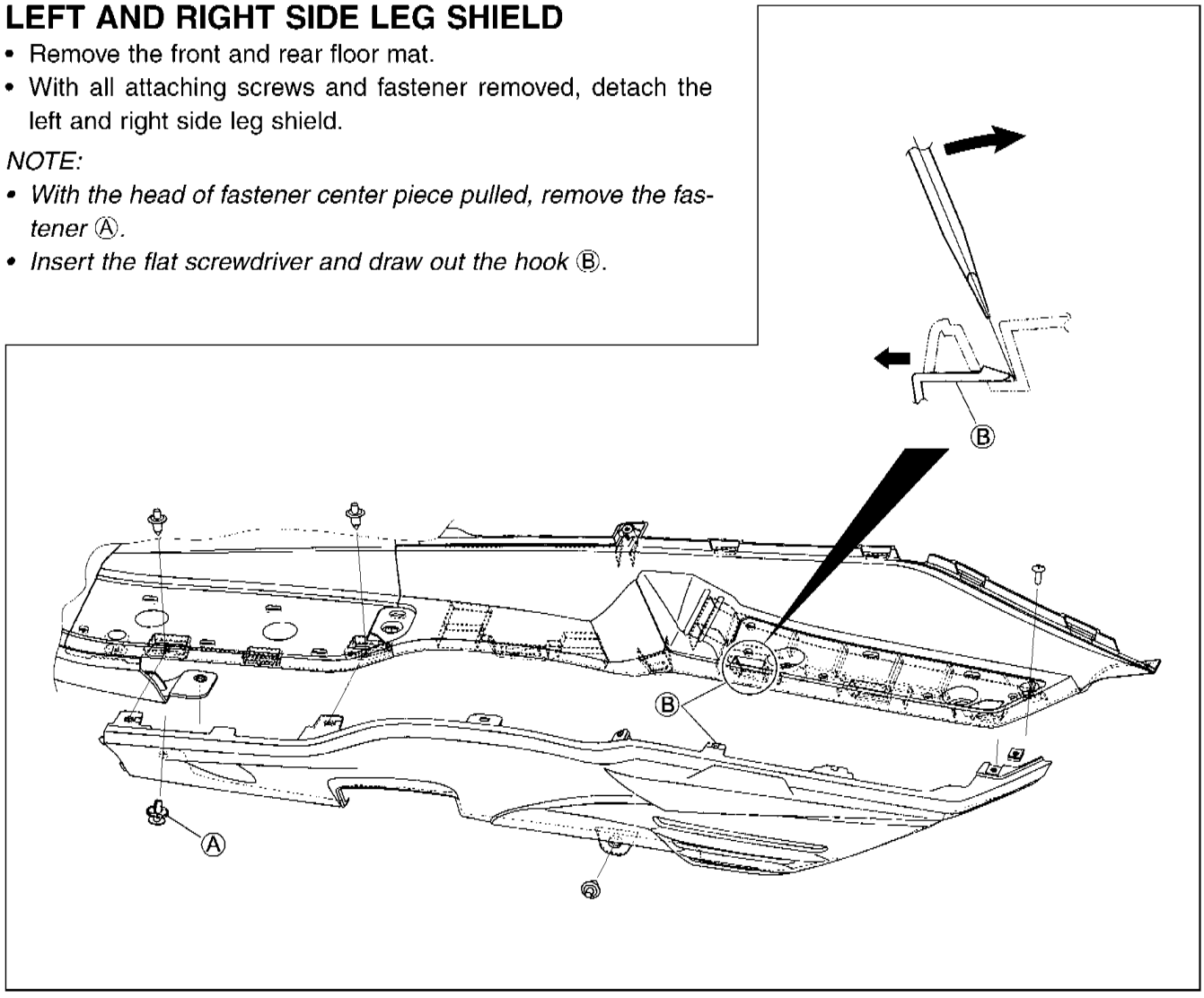

LEFT AND RIGHT REAR LEG SHIELD

- Remove the front frame cover. (☞ 6-11)
- Remove the left and right side leg shield.
- With the screws Ⓐ and bolts Ⓑ removed, detach the left and right rear led shield.

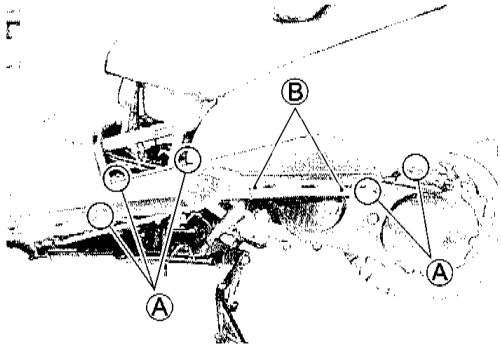

PILLION FOOTREST

- With the bolts removed, detach the pillion footrest.

Pillion foot-rest bolt: 10 N·m (1.0 kgf·m)

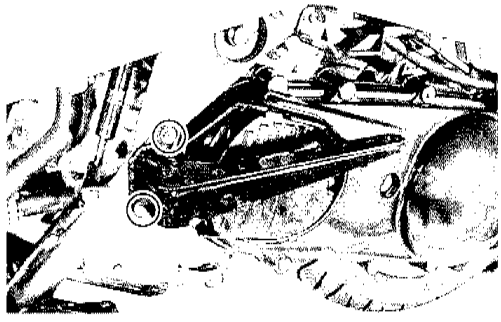

CENTER, LEFT AND RIGHT PILLION RIDER HANDLE

- Remove the screw ①.
- With the hooks drawn out, remove the back-rest.

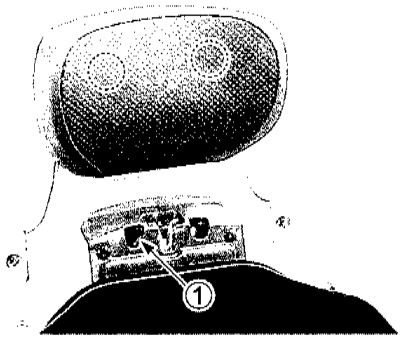

- With the fasteners removed, detach the center pillion rider handle cover ②.
- With the screws removed, detach the front pillion rider handle cover ③.

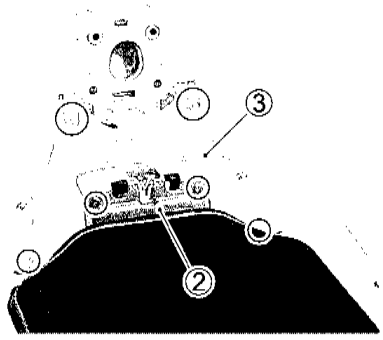

- With the bolts removed, detach the left and right pillion rider handle.

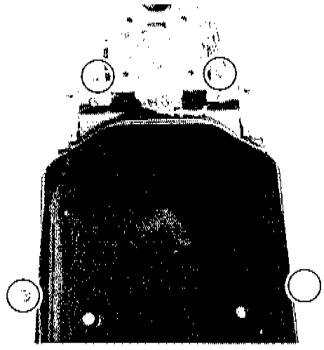

- Disconnect the seat lock cable.

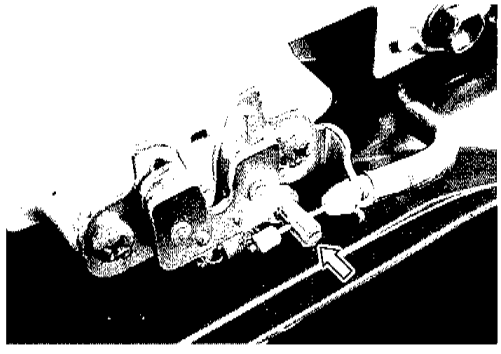

- With the bolts removed, detach the center pillion rider handle.

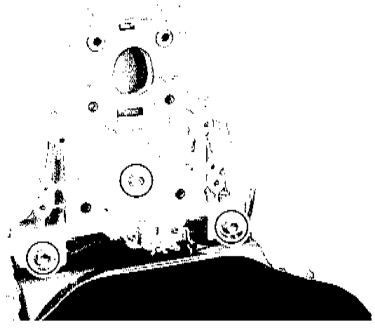

LOWER FRAME COVER

- With the screws removed, detach the lower frame cover ①.

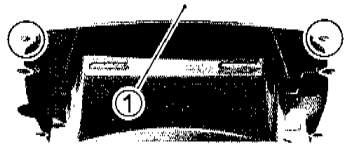

NOTE:
Install the lower frame cover with sliding upward after fitting its hooks.

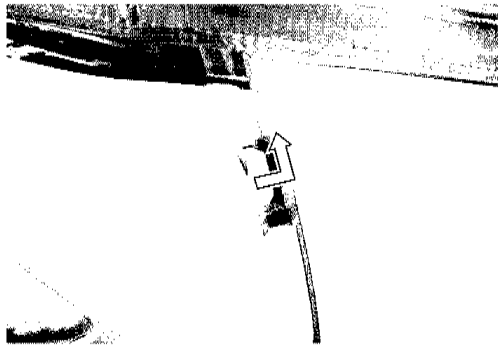

CENTER, LEFT AND RIGHT FRAME COVER

- Remove the front frame cover. (☞ 6-11)
- Remove the center, left and right pillion rider handle. (☞11-17)
- Remove the lower frame cover.

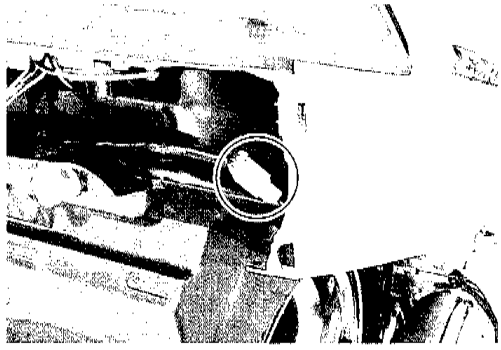

- Disconnect the rear combination light coupler.
- Remove all ataching fasteners, screws and nuts.
- Remove the center, left, right frame cover and rear combination light.

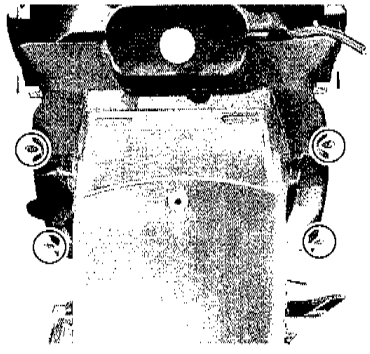

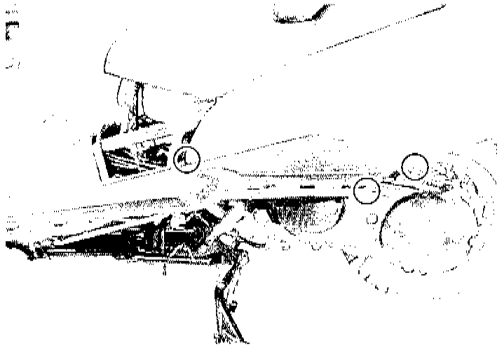

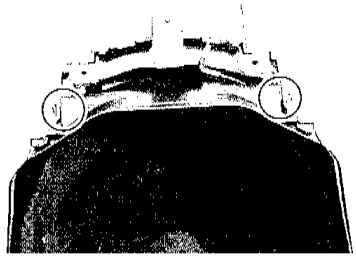

HELMET BOX

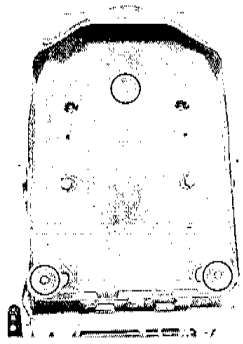

- Remove the front frame cover. (☞ 6-11)
- Remove the lower frame cover. (☞11-19)
- Remove the front helmet box cover. (☞6-13)
- Remove the center, left and right frame cover. (☞11-19)
- Remove the center, left and right pillion rider handle. (☞11-18)
- With the bolts removed, detach the helmet box.
- Seat molding set up. (☞11-40)

REAR FENDER

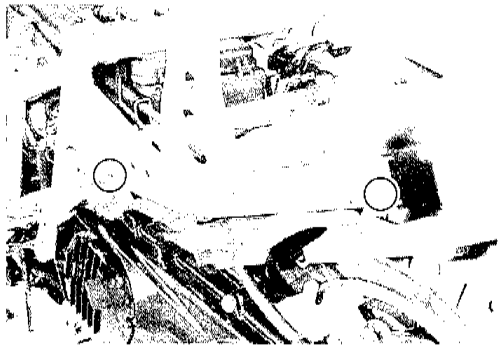

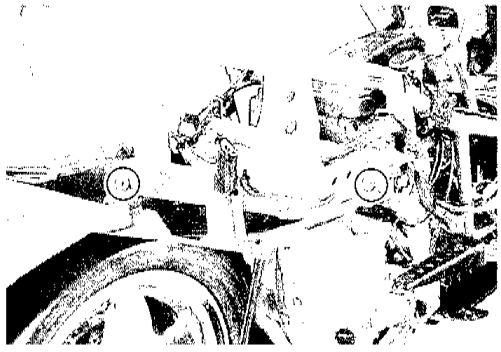

- Remove the helmet box.
- Remove the rear brake hose and brake-lock cable.
- With the bolts removed, detach the rear fender.

REAR BRAKE

BRAKE PAD REPLACEMENT

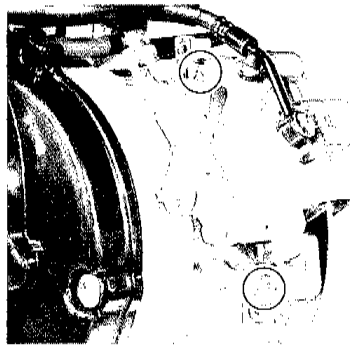

- Remove the rear wheel. (☞ 6-46)
- Remove the caliper mounting bolts.

Caliper mounting bolt: 25 N·m (2.5 kgf·m)

⚠ CAUTION

When tightening the caliper mounting bolts, make sure that the brake disc is slid on the axle all the way to the end.

- Remove the pad mounting pins.

Pad mounting pin: 18 N·m (1.8 kgf·m)

- Remove the brake pads.

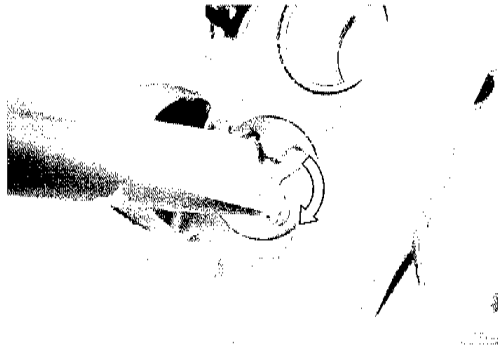

- Install the front piston.
- Install the rear piston with turning crockwise.

NOTE:
Keep back the front caliper piston not to be push out when installing the rear caliper piston.

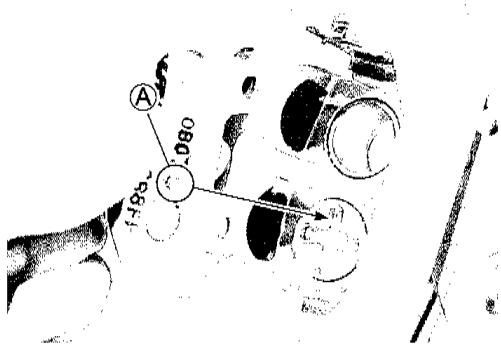

- Set the cross groove of caliper piston in the position as shown in right photo and install the new brake pads.

⚠ WARNING

Make sure that the convex Ⓐ of brake pad fits into the groove of caliper piston securely.

NOTE:
Oparate the combination brake lever several times so as to make the brake-lock auto adjuster working after rear wheel reassembly.

INSPECTION AFTER REPLACEMENT

- Rear brake inspection. (☞ 2-12)
- Brake fluid inspection. (☞ 2-12)
- Brake-lock inspection (☞ 11-7)

CALIPER REMOVAL

⚠ WARNING

* **Do not mix with brake fluid of different brand.**
* **Do not use a brake fluid kept in a open container or stored for long period of time.**
* **To store brake fluid, make sure to seal the container and keep it in a safe place to be out of reach of children.**
* **When filling brake fluid, take care not to allow water or dirt to enter the system.**
* **To wash the brake system parts, use brake fluid and not any other material.**
* **Do not allow dirt and fluids to contact the brake**

⚠ CAUTION

Do not allow brake fluid to contact the paint surface, plastic or rubber parts, or its chemical reaction can cause discoloration or crack.

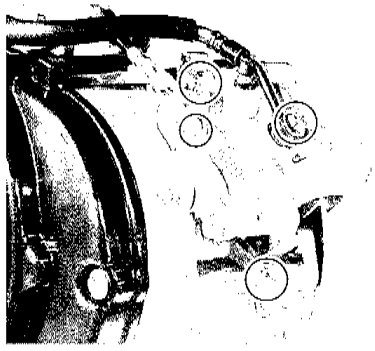

- Drain brake fluid from the combination brake reservoir. (☞ 2-13)
- Remove the rear wheel. (☞ 6-46)
- Remove the brake hose union bolt and caliper mounting bolts.
- With the brake-lock cable disconnected, detach the brake caliper.

- Remove the brake pad. (☞ 11-21)
- Remove the caliper bracket ① and pad spring ②.

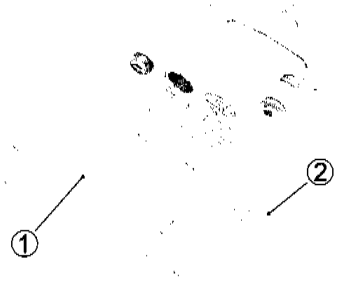

- Using an air blow gun, pressurize the caliper fluid chamber to push out the front side piston.

⚠ WARNING

* **Place a reg over the piston to prevent it from popping out and flying and keep hand off the piston.**
* **Be careful of brake fluid which can possibly splash.**
* **Do not use high pressure air but increase the pressure gradually.**

- Remove the rear piston with turning countercrockwise.

- Remove the dust seals ① and piston seals ②.

▲ CAUTION

> * **Use care not to cause scratch on the cylinder bore.**
> * **Do not reuse the piston seal and dust seal that have been removed.**

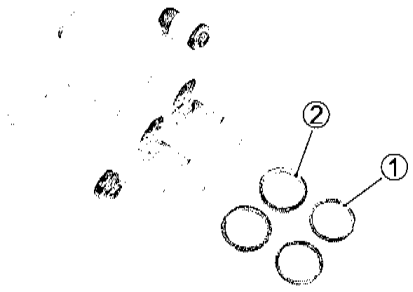

- Remove the bolts and take out the brake-lock housing.

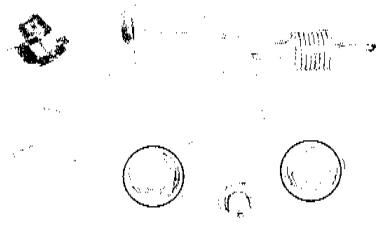

- Take out the lock nut ③, brake-lock adjuster ④, brake-lock arm ⑤ and brake-lock shaft ⑥.

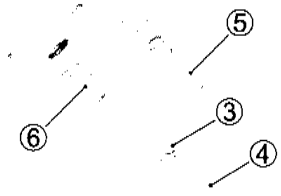

CALIPER INSPECTION

- Inspect the brake fluid leakage from O-ring ① and cup ②.
- Replace the rear brake caliper, if any abnormal condition found.

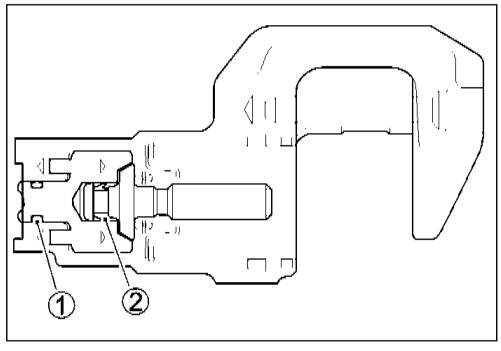

- Caliper (☞ 6-26)
- Piston (☞ 6-26)

REASSEMBLY

- Reassemble the caliper in the reverse order of disassembly procedure and observe the following points.
- Install the new gasket ①.

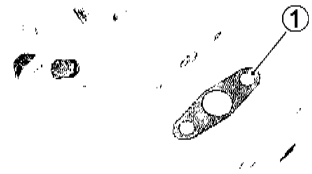

- With the thread lock applied, tighten the brake-lock housing bolts.

1360 99000-32130: THREAD LOCK SUPER "1360"

Brake-lock housing bolt: 23 N·m (2.3 kgf·m)

- Apply the grease to the brake-lock shaft and O-ring.

S H 99000-25100: SUZUKI SILICONE GREASE

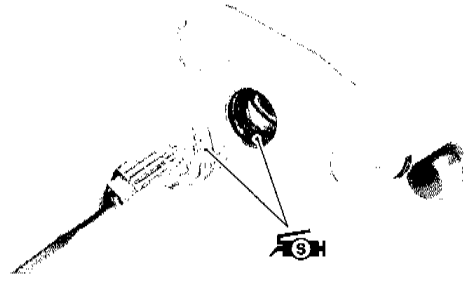

- Install the brake-lock shaft so as the punch mark Ⓐ may position between both notch Ⓑ of housing when tightening (turning counterclockwise) the brake-lock shaft.

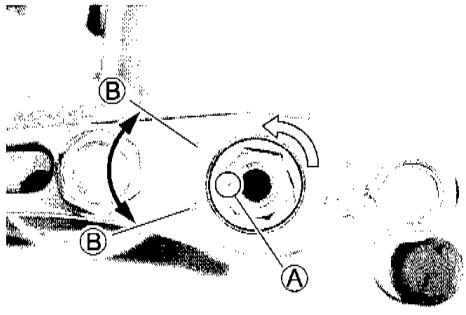

- Align the punch mark Ⓐ on the brake-lock housing with the punch mark Ⓒ on the brake-lock arm.

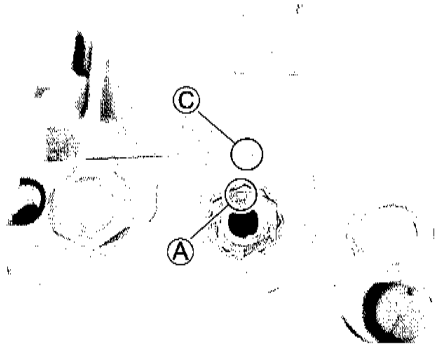

- Apply the grease to the tip and thread of brake-lock adjuster, assemble the lock nut and spring temporarily.

99000-25100: SUZUKI SILICONE GREASE

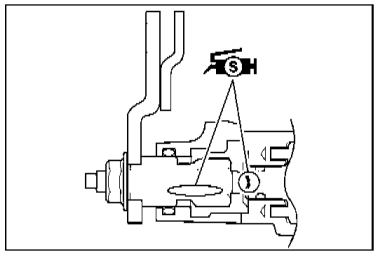

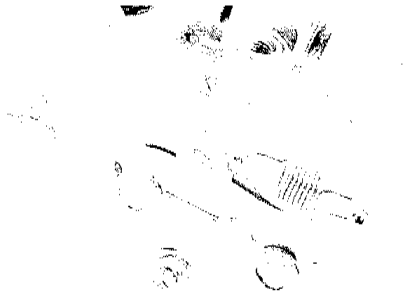

▲ CAUTION

- **Wash the caliper components with fresh brake fluid before reassembly. Do not wipe off brake fluid after washing the components.**
- **Replace the piston seal and dust seal with new ones with brake fluid applied.**

Brake fluid specification and classification: DOT 4

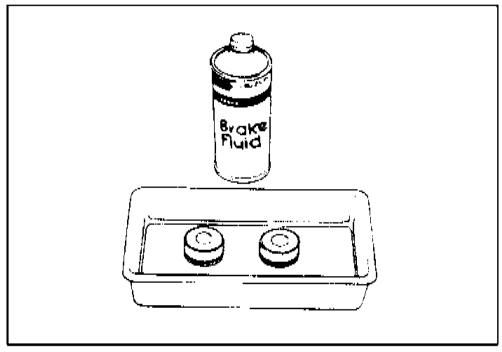

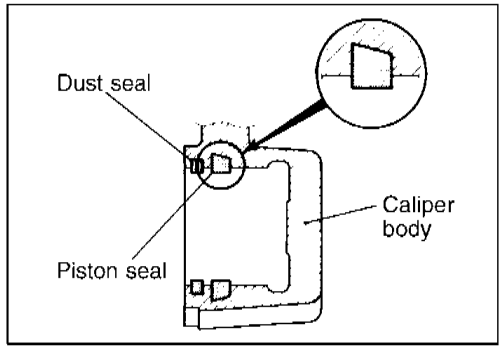

- Set back the rear caliper piston into the caliper with turning crockwise.

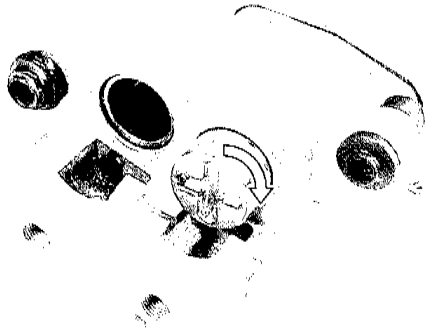

- Apply silicone grease to the caliper axles.

99000-25100: SUZUKI SILICONE GREASE

- Assemble the pad spring.

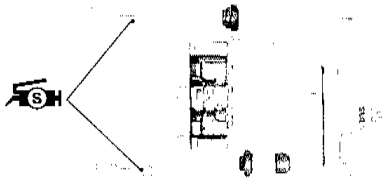

- Install the brake-lock cable.
- Tighten the caliper mounting bolts.

Caliper mounting bolt: 25 N·m (2.5 kgf·m)

- Tighten the brake hose union bolts.

Brake hose union bolt: 23 N·m (2.3 kgf·m)

⚠ CAUTION

When tightening the caliper mounting bolts, make sure that the brake disk is slid on the axle all the way to the end.

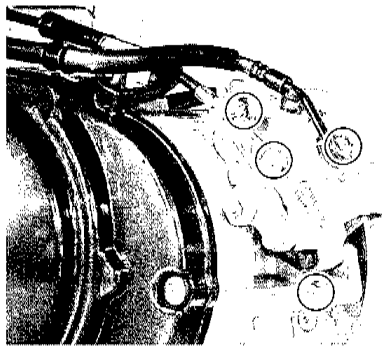

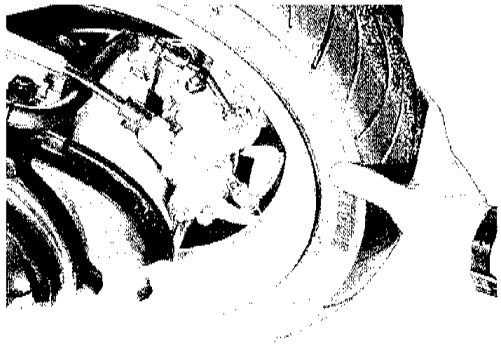

INSPECTION AFTER REASSEMBLY

- Brake-lock adjustment (☞ 11-7)
- Rear brake inspection (☞ 2-12)
- Brake fluid inspection (☞ 2-12)

CRANKCASE BRACKET

- Disassemble and reassemble the crankcase bracket as shown in illustration.
- Bearing replacement: ☞ 6-60

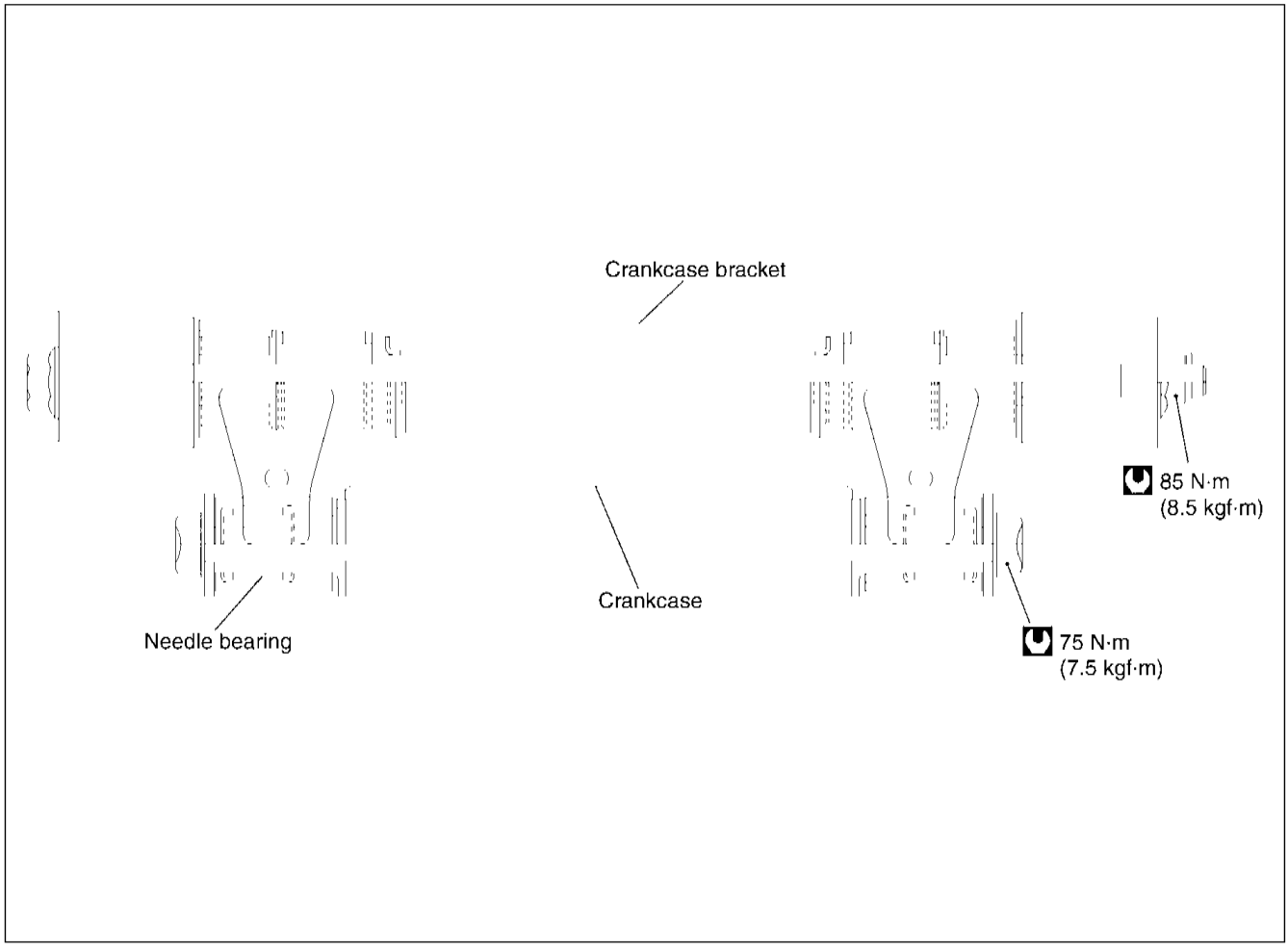

BRAKE SYSTEM

BRAKE-LOCK OPERATION

The brake-lock arm turns through the brake-lock cable as soon as pulling the brake-lock lever. The turning movement is converted to axial movement by the brake-lock adjuster connected to the body with the thread Ⓐ.

The axial movement transmits automatically from sleeve piston to adjust-bolt. The adjust-bolt presses brake pad to brake disk through the adjust-nut/caliper piston. In this bout, the adjust-bolt and adjust-nut move together with the relation as shown in the illustration.

When releasing the brake-lock lever, each parts return to home position, the caliper piston will be returned by an elasticity transform of piston seal, the adjust-bolt will be returned by the adjust-bolt spring, the brake-lock adjuster will be returned by the return-spring.

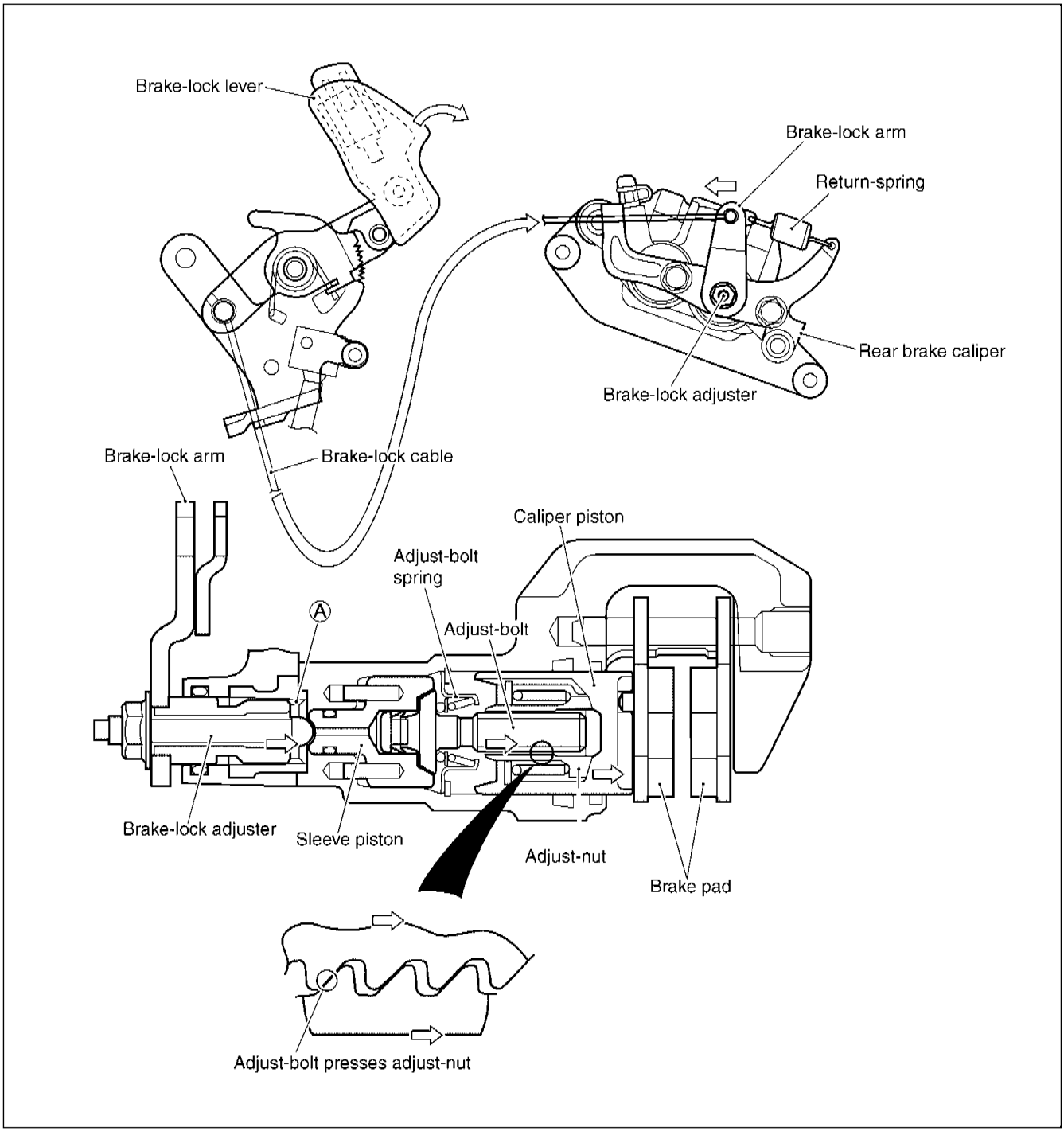

AUTOMATIC BRAKE-LOCK ADJUSTER SYSTEM

The automatic brake-lock adjuster system is equipped on the brake-lock. If the brake pad worn, the adjust-bolt/nut adjust the position of caliper piston so as to keep the certain clearance between brake pad and brake disk.

OPERATION (Normal condition→Braking)

The hydraulic pressure by brake lever operation acts on the adjust-nut/caliper piston. The adjust-bolt threads and adjust-nut threads have a clearance. The piston stroke when braking is shorter than clearance, thus, the braking operation will finish without automatic brake-lock adjuster system operation.

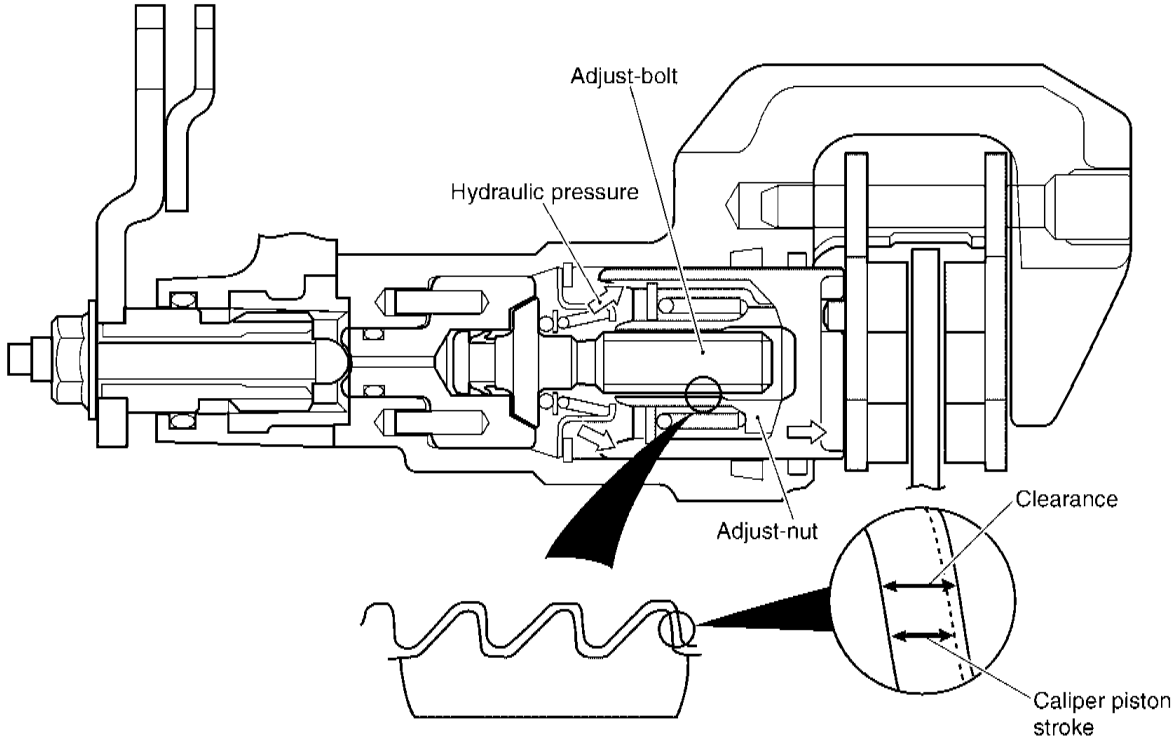

OPERATION (Brake pads are worn→Braking→Automatic adjuster operate)

If braking when the brake pad being worn, the caliper piston/adjust-nut move [①] untill the clearance depended on abrasion is done away.

The axial movement [②] is converted to rotary movement and acts on the adjust-bolt and adjust-nut. Only the adjust-bolt turns [③] because the caliper piston/adjust-nut is fixed to the brake pad with caliper piston groove and pad boss at Ⓐ. Thus, the adjust-bolt keeps original position with rotating as well as the caliper piston/adjust-nut moves outside.

The adjust-bolt stops rotating once the brake pad-to-disc clearance become zero, so the automatic adjuster operation is completed.

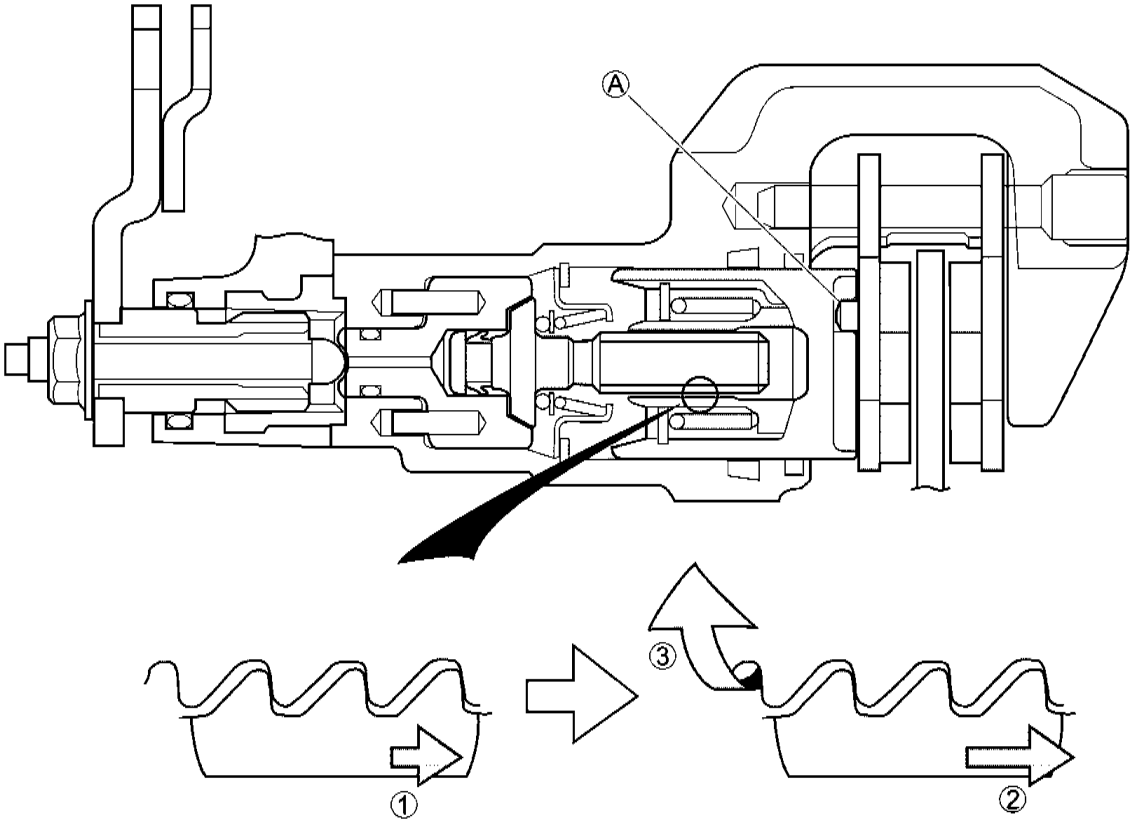

OVER-ADJUST PREVENTION MECHANISM

When rapid braking [①], the automatic brake-lock adjuster operation works too fast [②].
The caliper piston/adjust-nut is forced to stop [③] as soon as the brake pad contacts with brake disk, but the adjust-bolt turns by inertia force [④] after that. The adjust-bolt stops after the adjust-bolt/nut clearance becomes zero. On this account, the caliper piston/adjust-nut can not return back [⑤] using the elasticity transform of piston seal when releasing the brake lever. It is the over-adjust condition.

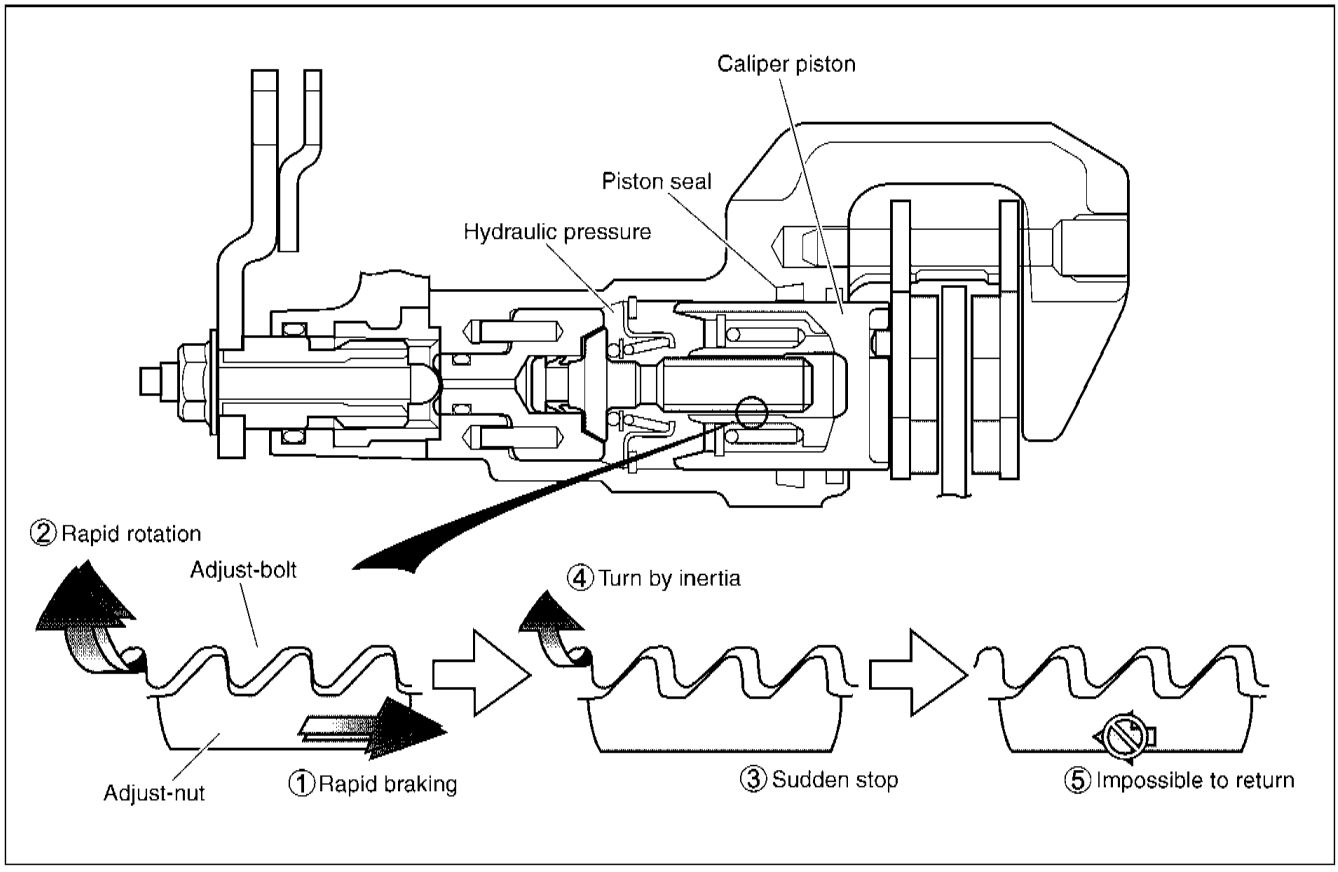

The spring is equipped between the caliper piston and the adjust-nut for preventing the over-adjust, serves damper interm of rapid caliper piston movement.
The spring compress [②] as soon as the caliper piston moves exponentially [①], the adjust-nut moves [③], [④] behind time. Here with, it is possible to make correct clearance of the adjust-bolt/nut because the inertia force with rapid movement does not work the adjust-bolt.

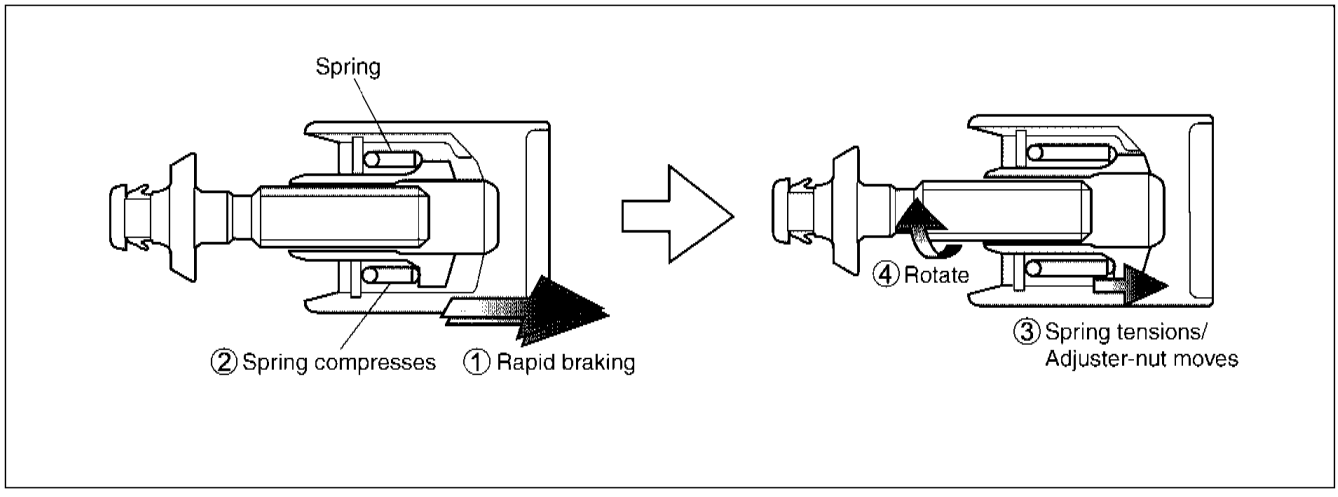

ELECTRICAL SYSTEM

LOCATION OF ELECTRICAL COMPONENTS

- Remove the front leg shield cover. (☞ 6-6)
  ① Main fuse/starter relay
  ② Turn signal relay/side-stand relay
  ③ Fuse box

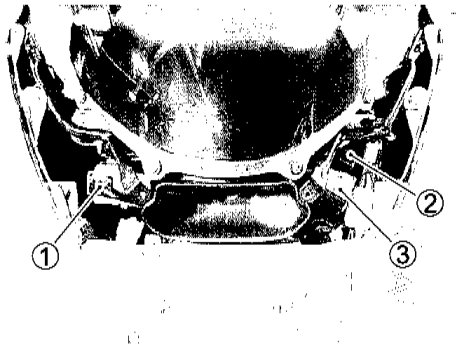

- Helmet box light switch ④

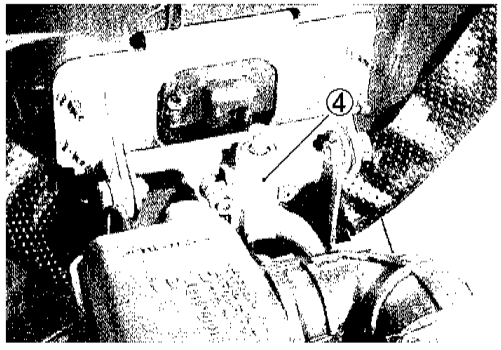

- Remove the helmet box (☞11-20)
  ⑤ Ignitor unit

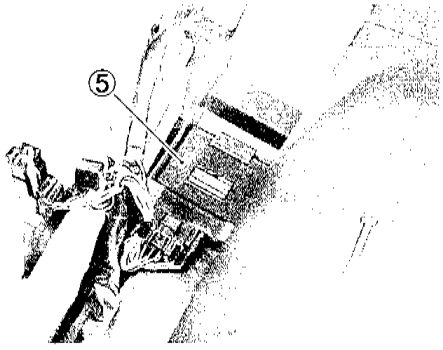

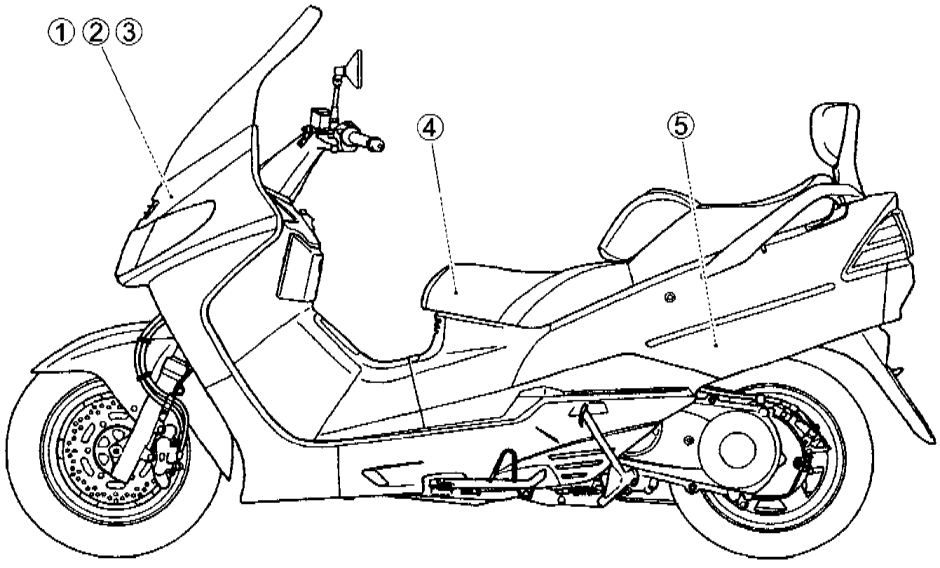

IGNITOR UNIT INSPECTION (USING MULTI-CIRCUIT TESTER)

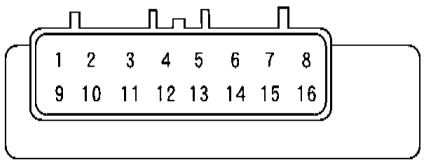

- Remove the helmet box. (☞11-20)

Use Multi-circuit tester to measure voltage between the terminals.

TOOL 09900-25008: Multi-circuit tester

Tester knob indication: Diode test (⊣◀)

unit: V

Tester ⊖ \ Tester ⊕	1	2	3	4	5	6	7	8	9	10	11	12	13	14	15	16
1		0.9 – 1.3	1.2 – 1.5	Approx.1.5	Approx.1.5	Approx.1.5	0.3 – 0.7	0.3 – 0.7	Approx.1.5	0.3 – 0.7	1.2 – 1.5	1.2 – 1.5	0.6 – 1.0	Approx.1.5	Approx.1.5	0.8 – 1.2
2	Approx.1.5		0.5 – 0.9	Approx.1.5	Approx.1.5	Approx.1.5	1 – 1.5	1.2 – 1.5	Approx.1.5	1.1 – 1.5	Approx.1.5	Approx.1.5	1.2 – 1.5	Approx.1.5	Approx.1.5	Approx.1.5
3	Approx.1.5	1.0 – 1.4		Approx.1.5	Approx.1.5	Approx.1.5	0 – 0.7	0.4 – 0.8	Approx.1.5	0.3 – 0.7	1.2 – 1.5	1.2 – 1.5	0.8 – 1.2	Approx.1.5	Approx.1.5	0.9 – 1.3
4	Approx.1.5	1.0 – 1.4	1.2 – 1.5		Approx.1.5	Approx.1.5	0 – 0.7	0.4 – 0.8	Approx.1.5	0.3 – 0.7	1.2 – 1.5	1.2 – 1.5	0.7 – 1.1	Approx.1.5	Approx.1.5	0.9 – 1.3
5	Approx.1.5	Approx.1.5	Approx.1.5	Approx.1.5		Approx.1.5	Approx.1.5	Approx.1.5	Approx.1.5	Approx.1.5	Approx.1.5	Approx.1.5	Approx.1.5	Approx.1.5	Approx.1.5	Approx.1.5
6	Approx.1.5	Approx.1.5	Approx.1.5	Approx.1.5	Approx.1.5		Approx.1.5	Approx.1.5	Approx.1.5	Approx.1.5	Approx.1.5	Approx.1.5	Approx.1.5	Approx.1.5	Approx.1.5	Approx.1.5
7	Approx.1.5	0.7 – 1.1	1.0 – 1.4	Approx.1.5	Approx.1.5	Approx.1.5		0 – 0.3	Approx.1.5	0	1.1 – 1.5	1 – 1.4	0.5 – 0.9	Approx.1.5	Approx.1.5	0.5 – 0.9
8	Approx.1.5	0.7 – 1.1	1.0 – 1.4	Approx.1.5	Approx.1.5	Approx.1.5	0 – 0.3		Approx.1.5	0 – 0.3	1.1 – 1.5	1 – 1.4	0.5 – 0.9	Approx.1.5	Approx.1.5	0.5 – 0.9
9	Approx.1.5	Approx.1.5	Approx.1.5	Approx.1.5	Approx.1.5	Approx.1.5	Approx.1.5	Approx.1.5		Approx.1.5	Approx.1.5	Approx.1.5	Approx.1.5	Approx.1.5	Approx.1.5	Approx.1.5
10	Approx.1.5	0.7 – 1.1	1.0 – 1.4	Approx.1.5	Approx.1.5	Approx.1.5	0	0 – 0.3	Approx.1.5		1.1 – 1.5	1 – 1.4	0.5 – 0.9	Approx.1.5	Approx.1.5	0.5 – 0.9
11	Approx.1.5	1.2 – 1.5	Approx.1.5	Approx.1.5	Approx.1.5	Approx.1.5	1 – 1.5	1.1 – 1.5	Approx.1.5	1.1 – 1.5		1.2 – 1.5	0.2 – 0.6	Approx.1.5	Approx.1.5	1.2 – 1.5
12	Approx.1.5	1.1 – 1.5	1.2 – 1.5	Approx.1.5	Approx.1.5	Approx.1.5	0.7 – 1.1	0.7 – 1.1	Approx.1.5	0.7 – 1.1	1.2 – 1.5		0.9 – 1.3	Approx.1.5	Approx.1.5	0.9 – 1.3
13	Approx.1.5	0.5 – 0.9	0.9 – 1.3	Approx.1.5	Approx.1.5	Approx.1.5	0.5 – 0.9	0.5 – 0.9	Approx.1.5	0.5 – 0.9	1.2 – 1.5	1.1 – 1.5		Approx.1.5	Approx.1.5	0.8 – 1.2
14	Approx.1.5	Approx.1.5	Approx.1.5	Approx.1.5	Approx.1.5	Approx.1.5	Approx.1.5	Approx.1.5	Approx.1.5	Approx.1.5	Approx.1.5	Approx.1.5	Approx.1.5		Approx.1.5	Approx.1.5
15	Approx.1.5	Approx.1.5	Approx.1.5	Approx.1.5	Approx.1.5	Approx.1.5	Approx.1.5	Approx.1.5	Approx.1.5	Approx.1.5	Approx.1.5	Approx.1.5	Approx.1.5	Approx.1.5		Approx.1.5
16	Approx.1.5	0.9 – 1.3	1.2 – 1.5	Approx.1.5	Approx.1.5	Approx.1.5	0 – 0.6	0.3 – 0.7	Approx.1.5	0.2 – 0.6	1.2 – 1.5	0.7 – 1.1	0.7 – 1.1	Approx.1.5	Approx.1.5	

LAMPS

HEADLIGHT

BULB REPLACEMENT

- Remove the front leg shield cover. (☞ 6-1)
- Remove the air intake pipe ①. (☞11-16)

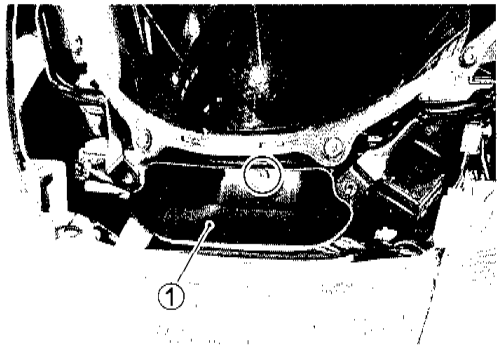

- Remove the headlight bulb socket ② and rubber boot ③, then remove the headlight bulb.
- Reassemble the headlight in the reverse order of the above.

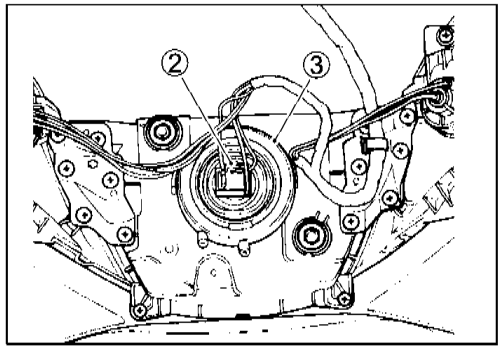

⚠ WARNING

The headlight uses a halogen bulb which operates at a high temperature. Therefore, handle the bulb after sufficiently cooled.

⚠ CAUTION

- **A fouled glass can cause damage to the bulb when lit. If the bulb is contacted with bare hand, wipe clean with a cloth damped with alcohol or detergent.**
- **Do not use the bulb of a wattage other than specification.**
- **When installing the rubber boot, turn its "TOP" mark pointing upward.**

FRONT TURN SIGNAL LIGHT

BULB REPLACEMENT

- Remove the front leg shield cover. (☞ 6-6)

NOTE:
Draw out the starter relay with rubber bracket before removing the right turn signal light balb.

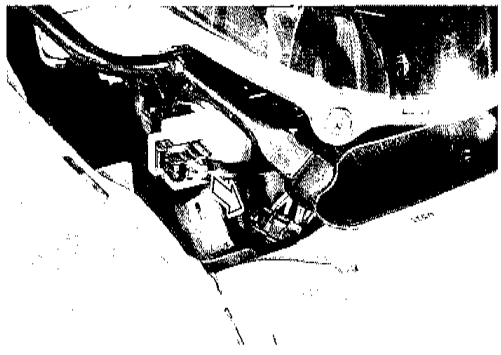

- Turn the light socket and remove the front turn signal light bulb.

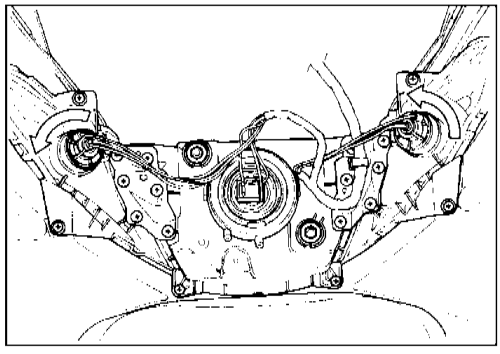

REAR COMBINATION LIGHT/REAR TURN SIGNAL LIGHT

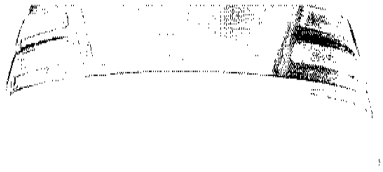

BULB REPLACEMENT

- Remove the lower frame cover ①.

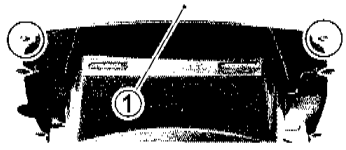

- Remove the following bulbs.
  ② Reat turn signal light
  ③ Rear combination light
  ④ License light

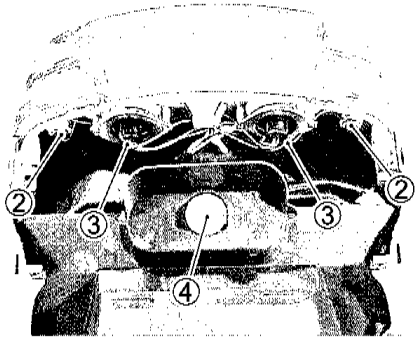

HELMET BOX LIGHT

BULB REPLACEMENT

- With the cover removed, replace the helmet box light bulb ①.

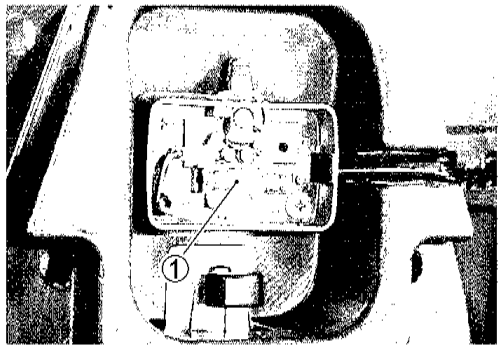

WIRING DIAGRAM

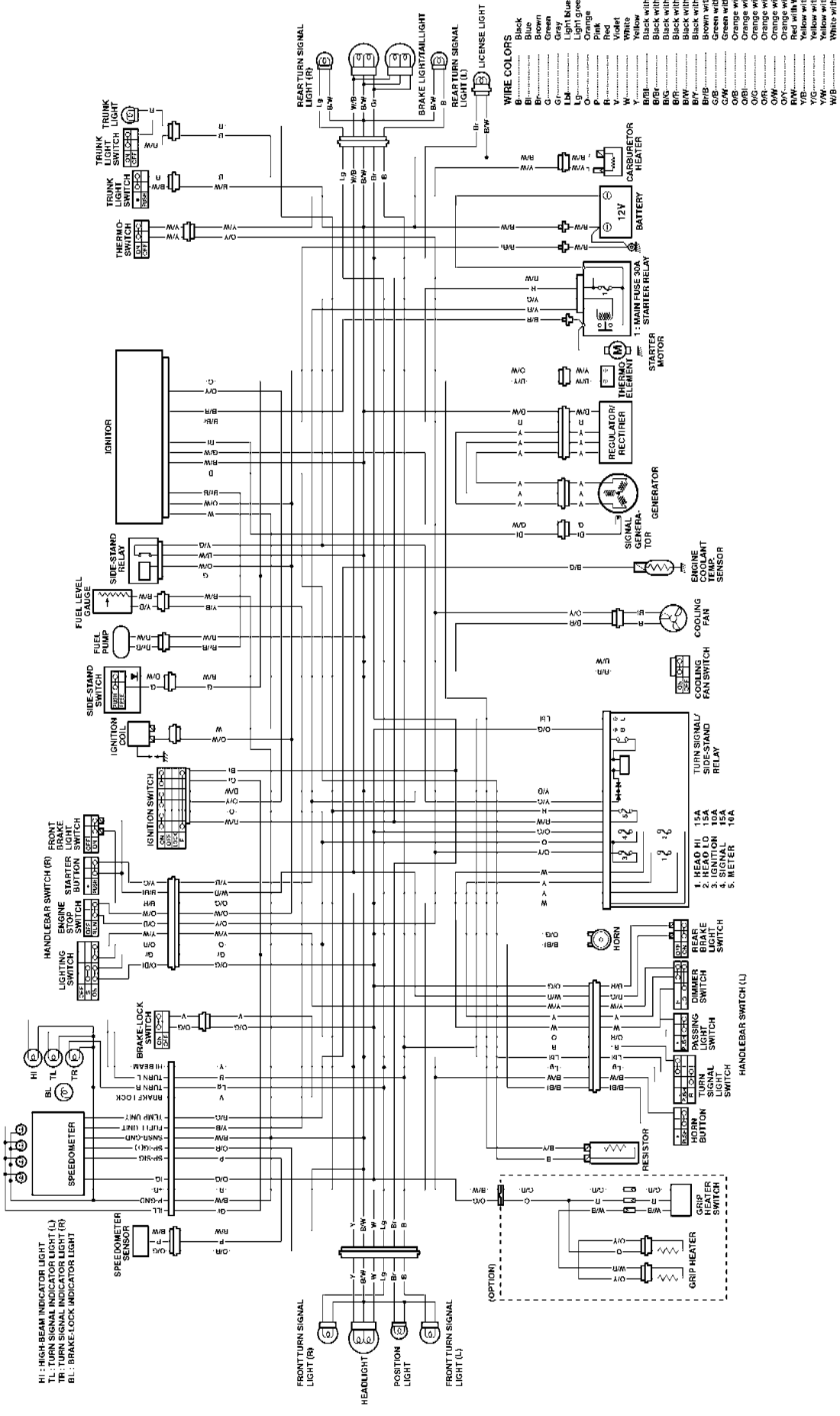

WIRE HARNESS ROUTING

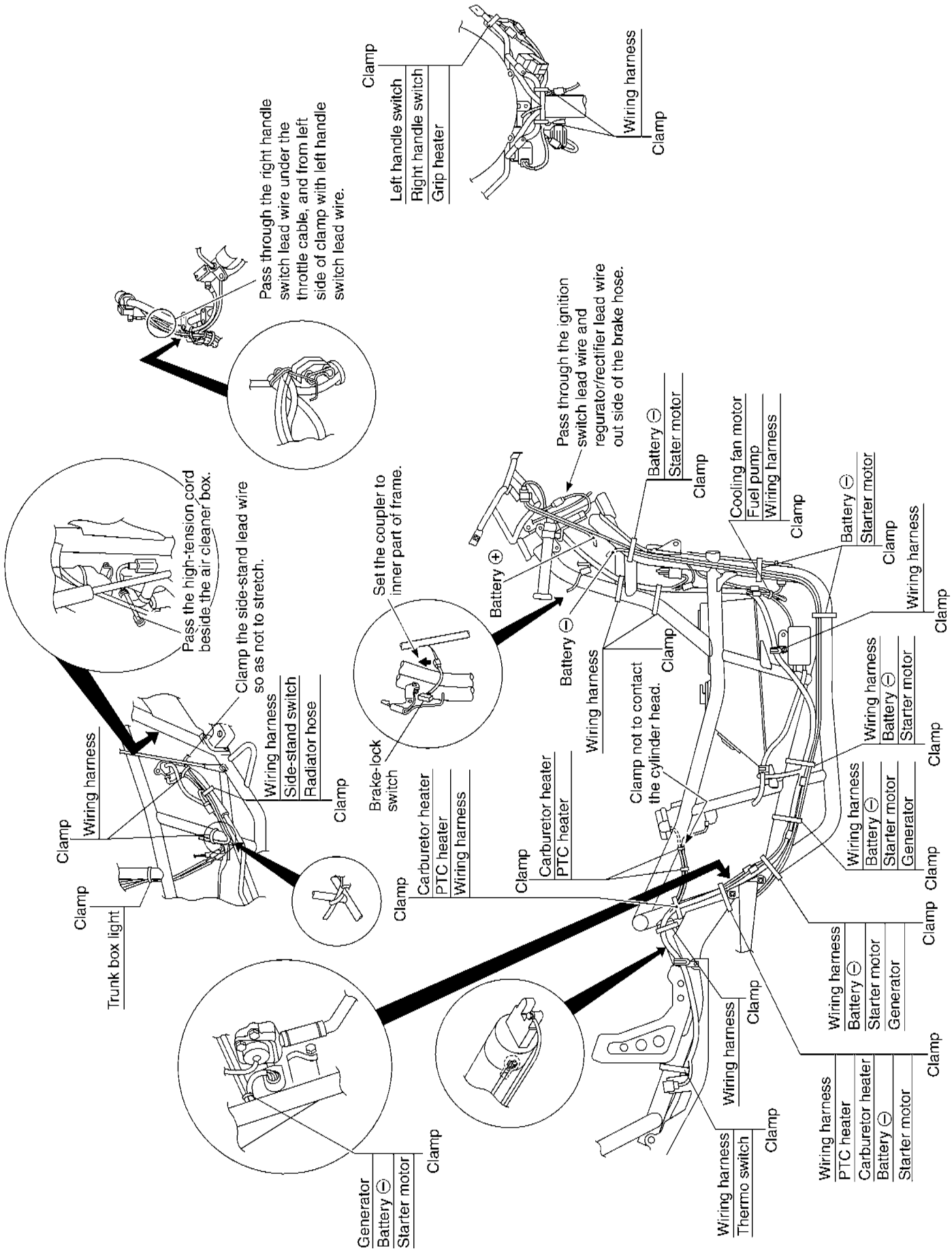

CABLE ROUTING

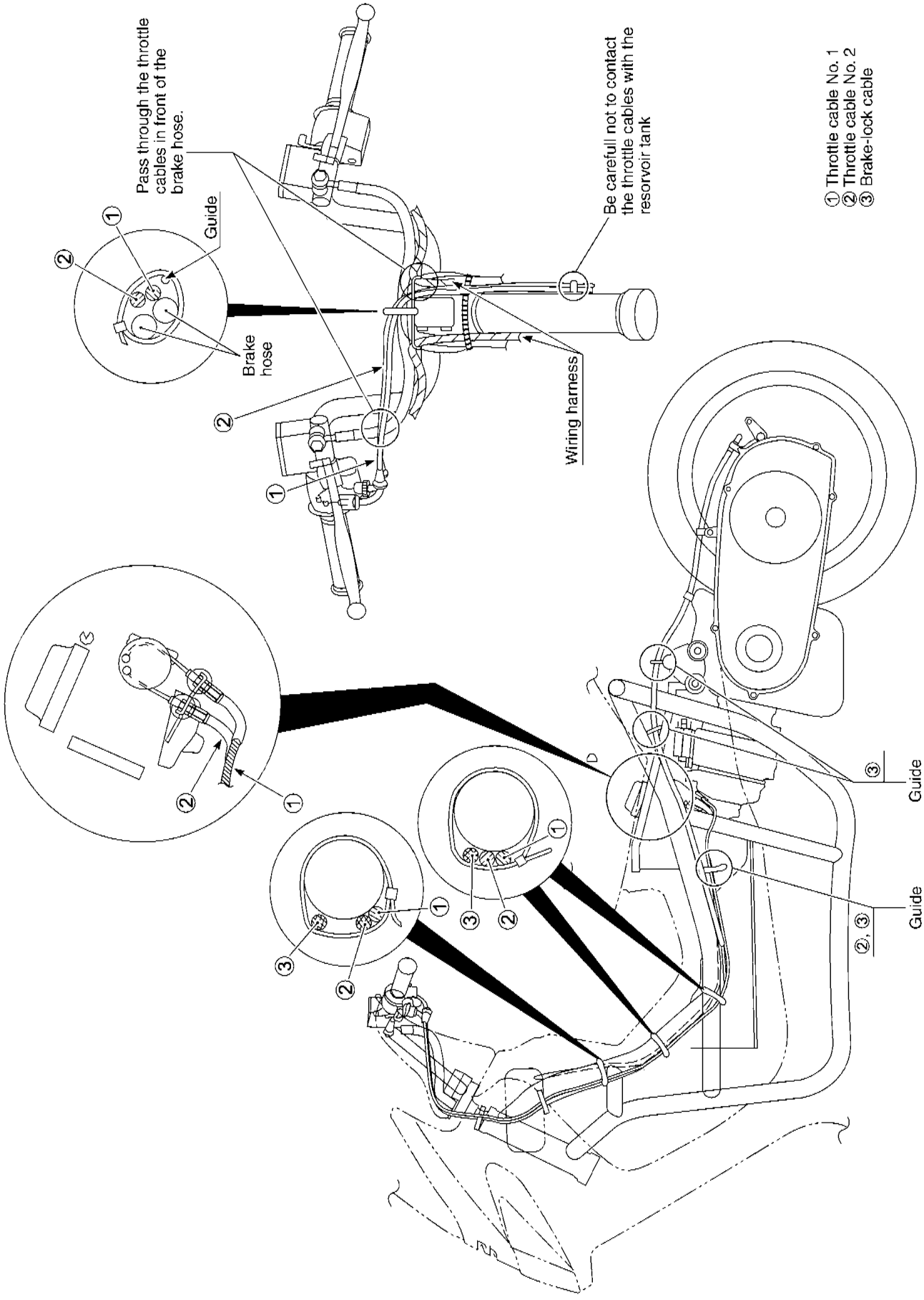

COMBINATION BRAKE HOSE ROUTING

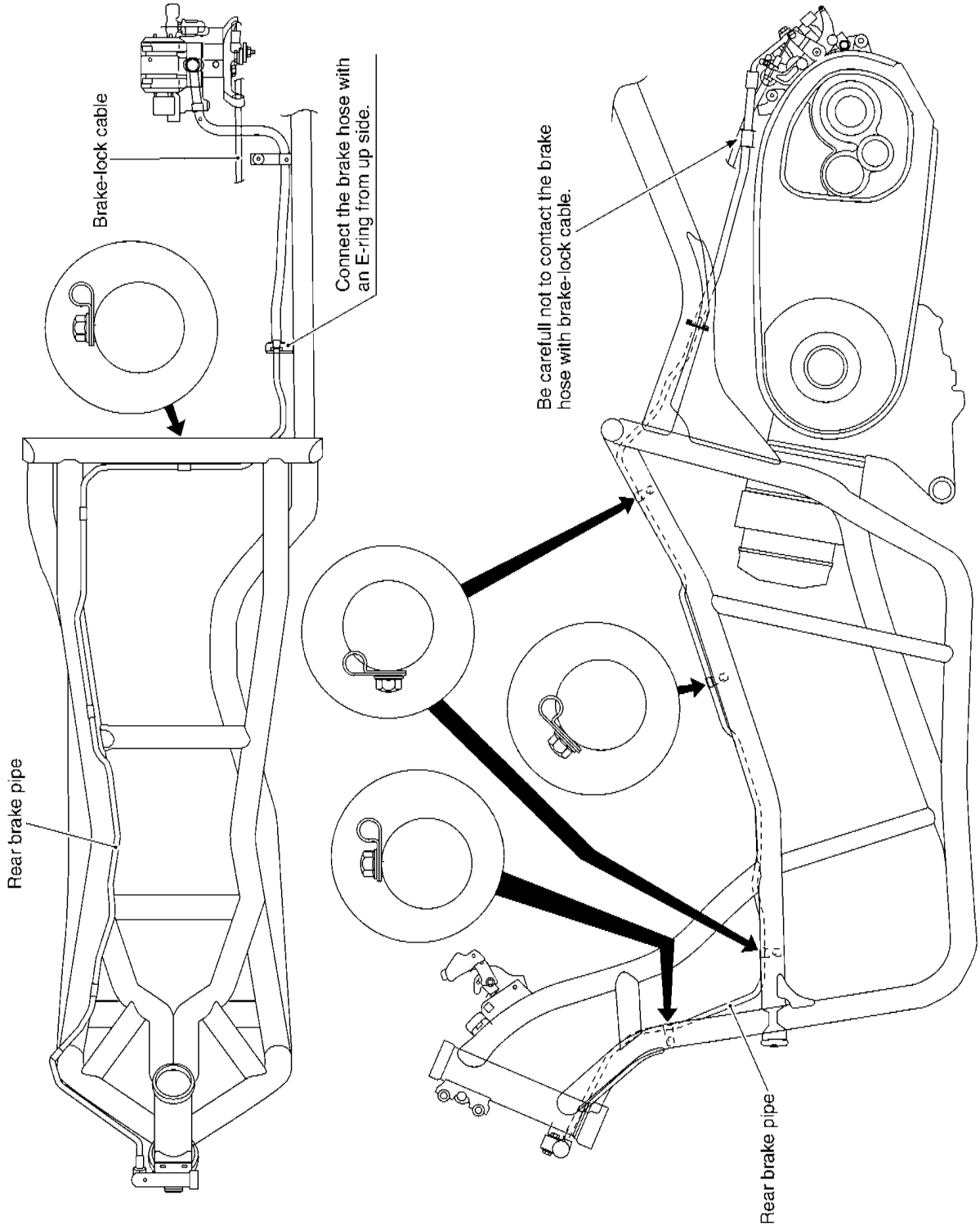

PAIR (AIR SUPPLY) HOSE ROUTING

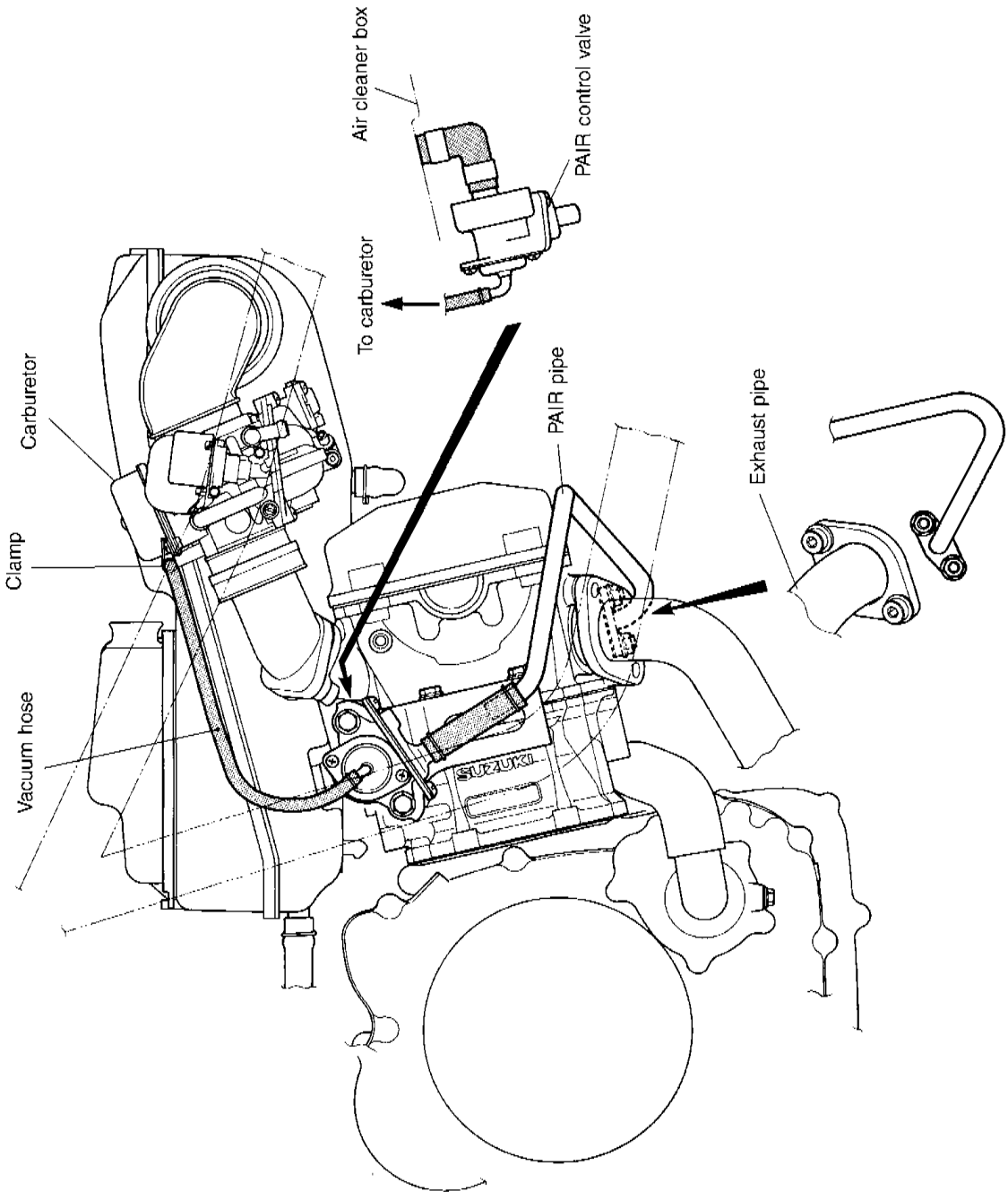

SEAT LOCK CABLE ROUTING

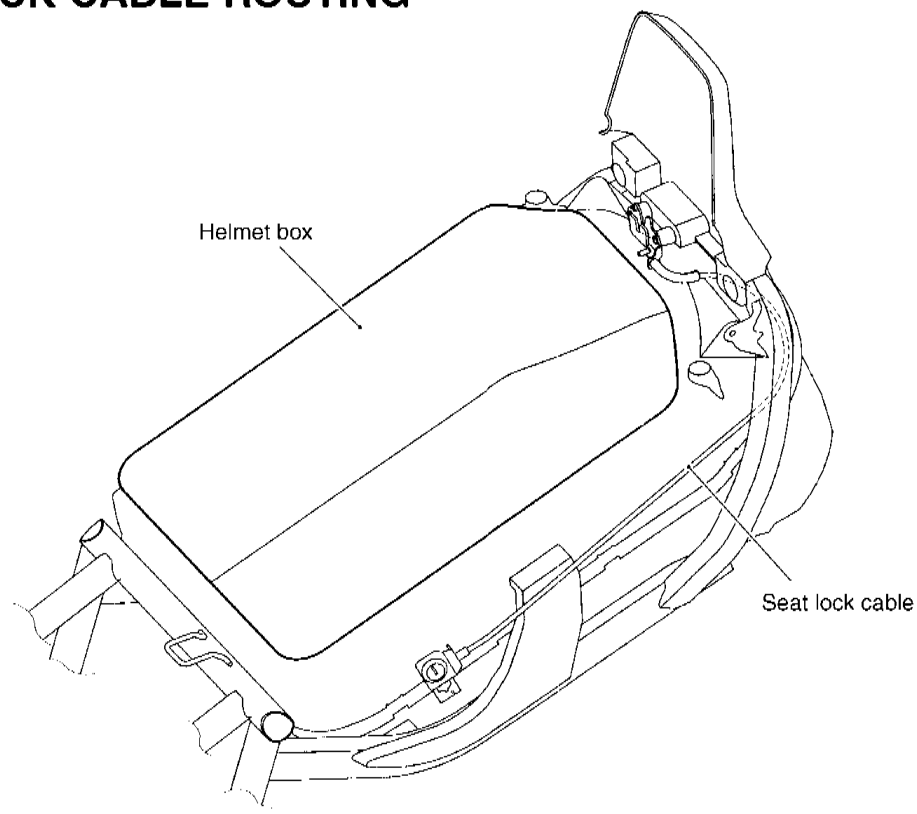

SEAT MOLDING SET-UP

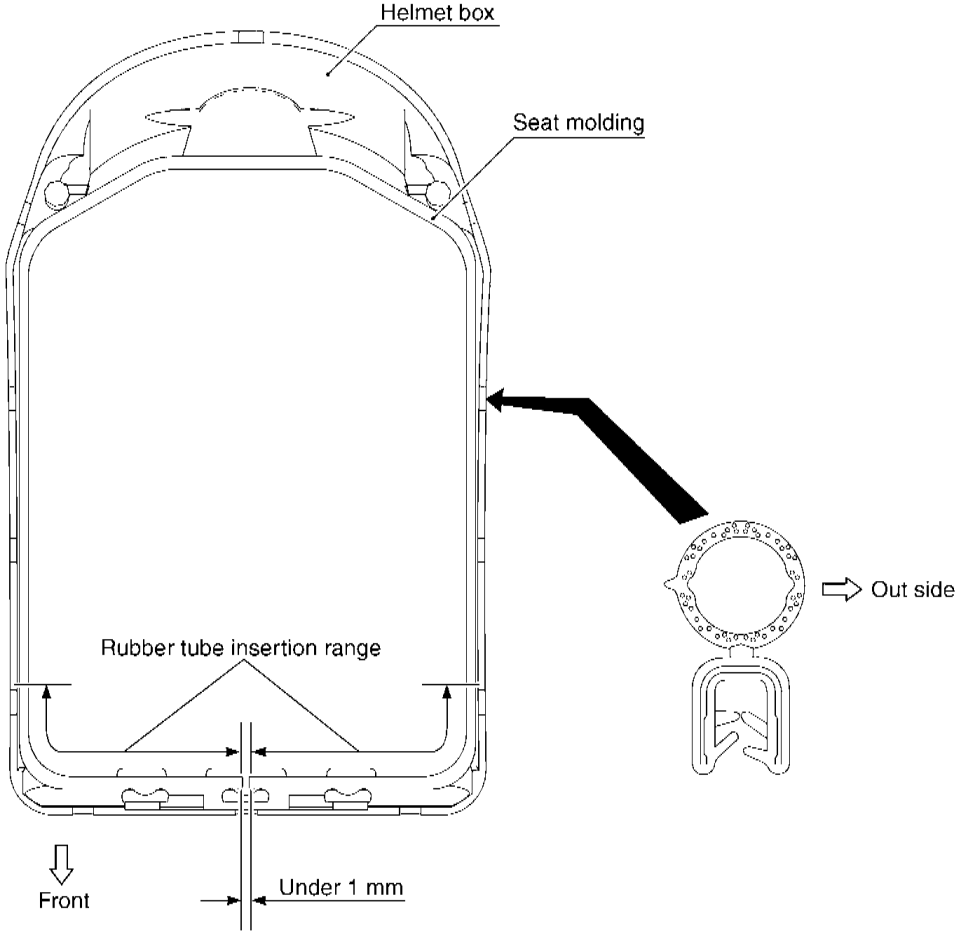

FUEL TANK/FUEL TANK LOWER COVER SET UP

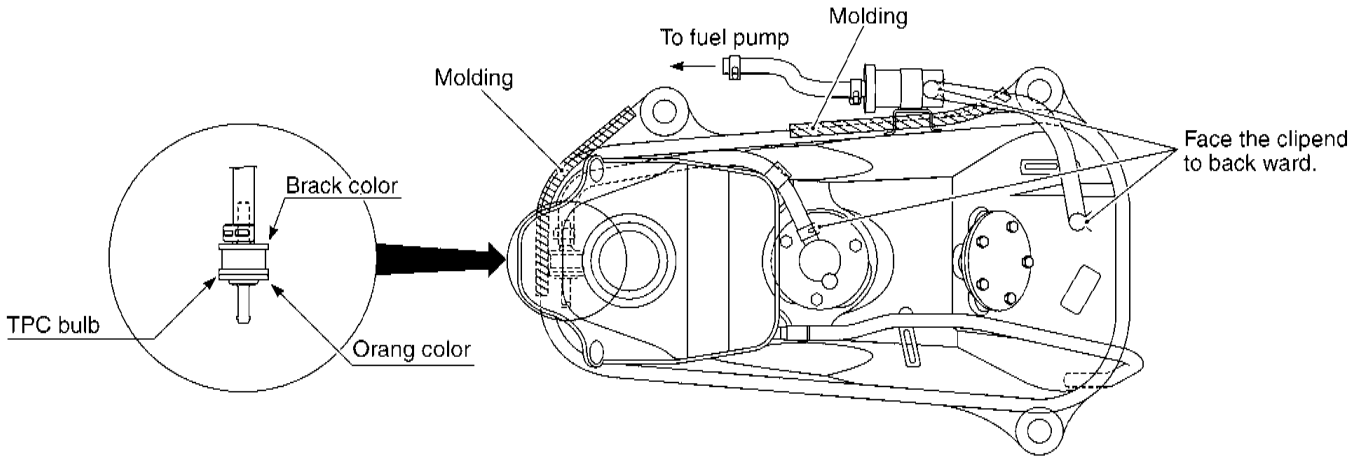

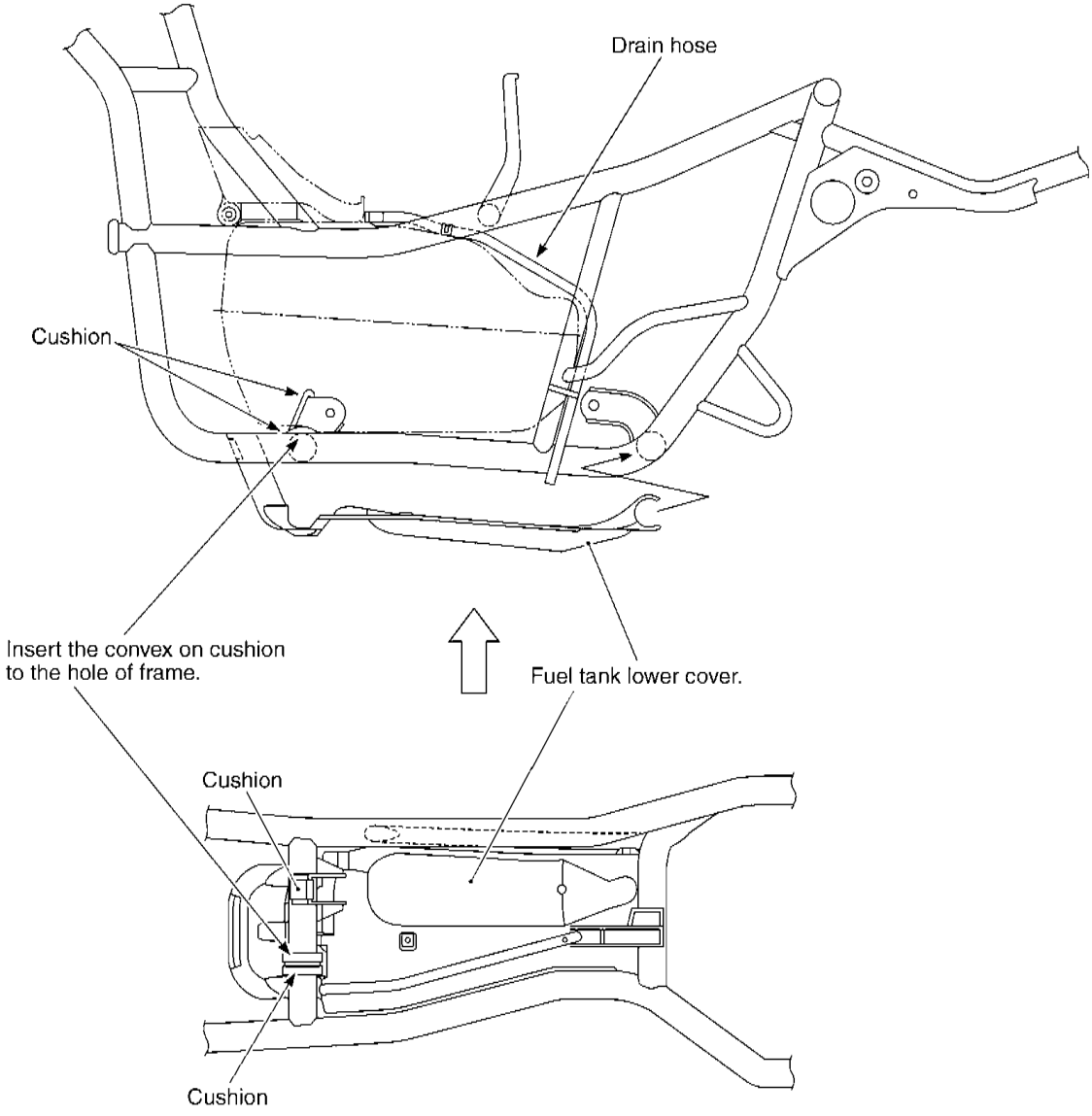

TIGHTENING TORQUE

ENGINE

ITEM	N·m	kgf·m
Engine mounting nut	* 75	7.5

SERVICE DATA

VALVE + GUIDE

Unit: mm

ITEM	STANDARD		LIMIT
Valve diam.	IN.	28.3	———
	EX.	25.0	———
Valve clearance (when cold)	IN.	0.08 – 0.13	———
	EX.	0.17 – 0.22	———
Valve guide to valve stem clearance	IN.	0.010 – 0.037	———
	EX.	0.030 – 0.057	———
Valve stem deflection	IN. & EX.	———	0.35
Valve guide I.D.	IN. & EX.	5.000 – 5.012	———
Valve stem O.D.	IN.	4.975 – 4.990	———
	EX.	4.955 – 4.970	———
Valve stem runout	IN. & EX.	———	0.05
Valve head thickness	IN. & EX.	———	0.5
Valve stem end length	IN. & EX.	———	1.8
Valve seat width	IN. & EX.	0.9 – 1.1	———
Valve head radial runout	IN. & EX.	———	0.03
Valve spring free length (IN. & EX.)	INNER	———	34.9
	OUTER	———	38.2
Valve spring tension (IN. & EX.)	INNER	5.3 – 6.5 kgf at length 28 mm	———
	OUTER	13.1 – 15.1 kgf at length 31.5 mm	———

CAMSHAFT + CYLINDER HEAD

Unit: mm

ITEM	STANDARD		LIMIT
Cam height	IN.	33.43 – 33.47	33.13
	EX.	33.50 – 33.54	33.20
Camshaft journal oil clearance	ϕ 22	0.032 – 0.066	0.150
	ϕ 17.5	0.028 – 0.059	0.150
Camshaft journal holder I.D.	ϕ 22	22.012 – 22.025	———
	ϕ 17.5	17.512 – 17.525	———
Camshaft journal O.D.	ϕ 22	21.959 – 21.980	———
	ϕ 17.5	17.466 – 17.484	———
Rocker arm I.D.	IN. & EX.	12.000 – 12.018	———
Rocker arm shaft O.D.	IN. & EX.	11.973 – 11.984	———
Cylinder head distortion	———		0.05

CYLINDER + PISTON + PISTON RING

Unit: mm

ITEM	STANDARD			LIMIT
Compression pressure	1 480 kPa (14.8 kgf/cm²)			1 030 kPa (10.3 kgf/cm²)
Piston to cylinder clearance	0.040 – 0.050			0.120
Cylinder bore	73.000 – 73.015			73.090
Piston diam.	72.955 – 72.970 Measure at 15 mm from the skirt end.			72.880
Cylinder distortion	———			0.05
Piston ring free end gap	1st	R	Approx. 9.3	7.4
	2nd	R	Approx. 7.2	5.7
Piston ring end gap	1st		0.10 – 0.30	0.5
	2nd		0.35 – 0.50	1.0
Piston ring to groove clearance	1st		———	0.18
	2nd		———	0.15
Piston ring groove width	1st		1.01 – 1.04	———
	2nd		1.01 – 1.04	———
	Oil		2.01 – 2.03	———
Piston ring thickness	1st		0.97 – 0.99	———
	2nd		0.97 – 0.99	———
Piston pin bore	19.002 – 19.008			19.030
Piston pin O.D.	18.996 – 19.000			18.980

CONROD + CRANKSHAFT

Unit: mm

ITEM	STANDARD	LIMIT
Conrod small end I.D.	19.006 – 19.014	19.040
Conrod deflection	———	3.0
Conrod big end side clearance	0.10 – 0.65	1.00
Conrod big end width	21.95 – 22.00	———
Crank web to web width	60.0 ± 0.1	———
Crankshaft runout	———	0.08

OIL PUMP

ITEM	STANDARD	LIMIT
Oil pump reduction ratio	1.470 (25/17)	———
Oil pressure (at 60°C, 140°F)	Above 80 kPa (0.8 kgf/cm²) Below 160 kPa (1.6 kgf/cm²) at 3 000 r/min.	———

CLUTCH

Unit: mm

ITEM	STANDARD	LIMIT
Clutch wheel I.D.	135.00 – 135.20	135.50
Clutch shoe thickness	3.0	2.0
Clutch engagement	* 2 500 – 3 100 r/min.	———
Clutch lock-up	4 200 – 5 200 r/min.	———

TRANSMISSION

Unit: mm Except ratio

ITEM	STANDARD	LIMIT
Reduction ratio	* Variable change 2.417 – 0.836	———
Final reduction ratio	8.066 (44/16 × 44/15)	———
Drive belt width	22.6	21.6
Movable drive face roller O.D.	23.72 – 23.88	———
Movable driven face spring free length	110	104.5

CARBURETOR

ITEM		SPECIFICATION
		E-02, 19, 57
Carburetor type		KEIHIN CVK30
Bore size		30 mm
I.D. No.		* 14F7
Idle r/min.		1 500 ± 100 r/min.
Float height		18.8 ± 1.0 mm
Main jet	(M.J.)	* #108
Main air jet	(M.A.J.)	Press-fitted
Jet needle	(J.N.)	* N7AE
Needle jet	(N.J.)	ϕ 2.1
Throttle valve	(Th.V.)	θ=10°
Pilot jet	(P.J.)	#38
Pilot screw	(P.S.)	* PRE-SET (1⅝ turns back)
Throttle cable play		2 – 4 mm

ELECTRICAL

ITEM		SPECIFICATION		NOTE
Ignition timing		* 8° B.T.D.C. at 1 500 r/min.		
Spark plug		Type	ND: U24ETR NGK: CR8EK	
		Gap	0.6 – 0.7 mm	
Spark performance		Over 8 mm at 1 atm.		
Ignition coil resistance		Primary	3 – 5 Ω	Tester range: (× 1 Ω)
		Secondary	17 – 30 kΩ	Tester range: (× 1 kΩ)
Magneto coil resistance		Pick-up	184 – 276 Ω	Tester range: (× 100 Ω)
Generator no-load voltage		More than 56 V (AC) at 5 000 r/min.		
Regulated voltage		13.5 – 15.0 V at 5 000 r/min.		
Starter relay resistance		2 – 6 Ω		
Battery	Type designation	FTX9-BS		
	Capacity	12 V 28.8 kC (8 Ah)/10HR		

ITEM	SPECIFICATION		NOTE
Fuse size	Headlight	HI: 15 A LO: 15 A	
	Turn signal	15 A	
	Ignition	10 A	
	Taillight	10 A	
	Main	30 A	
Carburetor heater coil resistance	12 – 18 Ω		
Fuel level gauge resistance	Full	Approx. 5 Ω	
	Empty	Approx. 103 Ω	

WATTAGE

Unit: W

ITEM		SPECIFICATION
Headlight	HI	60
	LO	55
Position or city light		5
Brake light/taillight		21/5 × 2
Turn signal light		21 × 4
License light	*	5
Speedometer light		1.7 × 2
Fuel level meter light		1.7
Engine coolant temp. meter light		1.7
Turn signal indicator light		1.7 × 2
High beam indicator light		1.7
Trunk light	*	5
Brake lock indicator light		1.7

BRAKE + WHEEL

Unit: mm

ITEM		STANDARD		LIMIT
Brake disc thickness		Front	4.5 ± 0.2	4.0
		Rear	5.0 ± 0.2	4.5
Brake disc runout		Front & Rear	———	0.30
Master cylinder bore		Front	11.000 – 11.043	———
		Rear	14.000 – 14.043	———
Master cylinder piston diam.		Front	10.957 – 10.984	———
		Rear	13.957 – 13.984	———
Brake caliper cylinder bore	Leading	Front	22.650 – 22.700	———
	Trailing		33.960 – 34.010	———
		Rear	25.400 – 25.450	———
Brake caliper piston diam.	Leading	Front	22.568 – 22.618	———
	Trailing		33.878 – 33.928	———
		Rear	25.335 – 25.368	———
Wheel rim runout		Axial	———	2.0
		Radial	———	2.0
Wheel axle runout		Front	———	0.25

ITEM	STANDARD		LIMIT
Tire size	Front	110/90-13 M/C 55P	———
	Rear	130/70-13 M/C 63P	———
Tire type	Front	HOOP B03 G	———
	Rear	HOOP B02 G	———
Wheel rim size	Front	13 × MT3.00	———
	Rear	13 × MT3.50	———
Tire tread depth	Front	———	1.6
	Rear	———	2.0

SUSPENSION

Unit: mm

ITEM	STANDARD	LIMIT	NOTE
Front fork stroke	100	———	
Front fork spring free length	330.4	323	
Front fork oil level	96	———	
Rear wheel travel	100	———	

TIRE PRESSURE

COLD INFLATION TIRE PRESSURE	SOLO RIDING		DUAL RIDING	
	kPa	kgf/cm²	kPa	kgf/cm²
FRONT	175	1.75	175	1.75
REAR	200	2.00	280	2.80

FUEL + OIL + ENGINE COOLANT

ITEM	SPECIFICATION		NOTE
Fuel type	Gasoline used should be graded 91 octane or higher. An unleaded gasoline is recommended.		
Fuel tank capacity	13.0 L		
Enigne oil type	SAE 10W/40, API SF or SG		
Engine oil capacity	Change	1 900 ml	
	Filter change	2 000 ml	
	Overhaul	2 300 ml	
Final gearbox oil type	SAE 10W/40, API SF or SG		
Final gearbox oil capacity	Change	190 ml	
	Overhaul	200 ml	
Front fork oil type	Fork oil #10		
Front fork oil capacity (each leg)	281 ml		
Brake fluid type	DOT 4		
Engine coolant type	Use an anti-freeze/coolant compatible with aluminum radiator, mixed with distilled water only, at the ratio of 50 : 50.		
Engine coolant capacity	Reservoir only	250 ml	
	Without reservoir	1 500 ml	

THERMOSTAT + RADIATOR + FAN

ITEM		STANDARD	LIMIT
Thermostat valve opening temperature		Approx. 75°C (167°F)	———
Thermostat valve lift		Over 3 mm at 90°C (194°F)	———
Radiator cap valve opening pressure		110 kPa (1.1 kgf/cm^2)	———
Cooling fan thermo-switch operating temperature	OFF → ON	Approx. 105°C (221°F)	———
	ON → OFF	Approx. 100°C (212°F)	———
Engine coolant temperature sensor resistance	50°C (122°F)	140 – 310 Ω	———
	115°C (239°F)	24.1 – 28.2 Ω	———

AN250K2 (2002-MODEL)

This chapter describes service data, service specifications and servicing procedures which differ from those of the AN250W/X/Y/K1 ('98/'99/2000/2001-model).

NOTE:
- *Any differences between AN250K1 ('01-MODEL) and AN250K2 ('02-MODEL) in specification and service data are clearly indicated with the asterisk marks (*).*
- *The drive belt inspection has been added in the "PERIODIC MAINTENANCE CHART".*
- *Please refer to the chapter 1 through 11 for details which are not given in this chapter.*

CONTENTS

SPECIFICATIONS

DIMENSIONS AND DRY MASS

Overall length	2 260 mm
Overall width	765 mm
Overall height	1 365 mm
Wheelbase	1 590 mm
Ground clearance	120 mm
Dry mass	166 kg

ENGINE

Type	Four-stroke, OHC
Number of cylinders	1
Bore	73.0 mm
Stroke	59.6 mm
Displacement	249 cm^3
Corrected compression ratio	10.5 : 1
Carburetor	KEIHIN CVK30, single
Air cleaner	Plyurethane foam element
Starter system	Electric starter
Lubrication system	Wet sump

TRANSMISSION

Clutch	Dry shoe, automatic, centrifugal type
Raduction ratio	Variable change (2.417 – 0.836)
Final reduction ratio	8.066 (44/16 × 44/15)
Drive system	V-belt drive

CHASSIS

Front suspension	Telescopic, coil spring, oil damped
Rear suspension	Link type, gas/coil spring, gas/oil damped
Caster	27°
Trail	106 mm
Steering angle	40° (left & right)
Turning radius	2.8 m
Front tire size	110/90-13M/C 55P
Rear tire size	130/70-13M/C 63P
Front brake	Disc brake
Combination brake	Disc brake

ELECTRICAL

Ignition type	Electronic ignition (Transistorized)
Ignition timing	8° B.T.D.C. at 1 500 rpm
Spark plug	NGK CR8EK or DENSO U24ETR
Battery	12 V 28.8 kC (8 Ah)/10 HR
Generator	Three-phase A.C. Generator
Fuse	30/15/15/10/15/10 A
Headlight	12 V 60/55 W (H4)
Position light	12 V 5 W
Turn signal light	12 V 21 W × 4
Brake light/taillight	12 V 21/5 W × 2
License plate light	12 V 5 W
Trunk light	12 V 5 W
Speedometer light	12 V 1.7 W × 2
High beam indicator light	12 V 1.7 W
Turn signal indicator light	12 V 1.7 W × 2
Coolant temperature gauge light	12 V 1.7 W
Fuel level gauge light	12 V 1.7 W
Brake lock indicator light	12 V 1.7 W

CAPACITIES

Fuel tank	13.0 L
Engine oil, oil change	1 900 ml
with filter change	2 000 ml
Final gear oil	190 ml
Coolant	1 500 ml

SERVICE DATA

VALVE + GUIDE

Unit: mm

ITEM	STANDARD		LIMIT
Valve diam.	IN.	28.3	———
	EX.	25.0	———
Valve clearance (when cold)	IN.	0.08 – 0.13	———
	EX.	0.17 – 0.22	———
Valve guide to valve stem clearance	IN.	0.010 – 0.037	———
	EX.	0.030 – 0.057	———
Valve stem deflection	IN. & EX.	———	0.35
Valve guide I.D.	IN. & EX.	5.000 – 5.012	———
Valve stem O.D.	IN.	4.975 – 4.990	———
	EX.	4.955 – 4.970	———
Valve stem runout	IN. & EX.	———	0.05
Valve head thickness	IN. & EX.	———	0.5
Valve stem end length	IN. & EX.	———	1.8
Valve seat width	IN. & EX.	0.9 – 1.1	———
Valve head radial runout	IN. & EX.	———	0.03
Valve spring free length (IN. & EX.)	INNER	———	34.9
	OUTER	———	38.2
Valve spring tension (IN. & EX.)	INNER	5.3 – 6.5 kgf at length 28 mm	———
	OUTER	13.1 – 15.1 kgf at length 31.5 mm	———

CAMSHAFT + CYLINDER HEAD

Unit: mm

ITEM	STANDARD		LIMIT
Cam height	IN.	33.43 – 33.47	33.13
	EX.	33.50 – 33.54	33.20
Camshaft journal oil clearance	ϕ 22	0.032 – 0.066	0.150
	ϕ 17.5	0.028 – 0.059	0.150
Camshaft journal holder I.D.	ϕ 22	22.012 – 22.025	———
	ϕ 17.5	17.512 – 17.525	———
Camshaft journal O.D.	ϕ 22	21.959 – 21.980	———
	ϕ 17.5	17.466 – 17.484	———
Rocker arm I.D.	IN. & EX.	12.000 – 12.018	———
Rocker arm shaft O.D.	IN. & EX.	11.973 – 11.984	———
Cylinder head distortion	———		0.05

CYLINDER + PISTON + PISTON RING

Unit: mm

ITEM	STANDARD			LIMIT
Compression pressure	1 480 kPa (14.8 kgf/cm²)			1 030 kPa (10.3 kgf/cm²)
Piston to cylinder clearance	0.040 – 0.050			0.120
Cylinder bore	73.000 – 73.015			73.090
Piston diam.	72.955 – 72.970 Measure at 15 mm from the skirt end.			72.880
Cylinder distortion	———			0.05
Piston ring free end gap	1st	R	Approx. 9.3	7.4
	2nd	R	Approx. 7.2	5.7
Piston ring end gap	1st		0.10 – 0.30	0.5
	2nd		0.35 – 0.50	1.0
Piston ring to groove clearance	1st		———	0.18
	2nd		———	0.15
Piston ring groove width	1st		1.01 – 1.04	———
	2nd		1.01 – 1.04	———
	Oil		2.01 – 2.03	———
Piston ring thickness	1st		0.97 – 0.99	———
	2nd		0.97 – 0.99	———
Piston pin bore	19.002 – 19.008			19.030
Piston pin O.D.	18.996 – 19.000			18.980

CONROD + CRANKSHAFT

Unit: mm

ITEM	STANDARD	LIMIT
Conrod small end I.D.	19.006 – 19.014	19.040
Conrod deflection	———	3.0
Conrod big end side clearance	0.10 – 0.65	1.00
Conrod big end width	21.95 – 22.00	———
Crank web to web width	60.0 ± 0.1	———
Crankshaft runout	———	0.08

OIL PUMP

ITEM	STANDARD	LIMIT
Oil pump reduction ratio	1.470 (25/17)	———
Oil pressure (at 60°C, 140°F)	Above 80 kPa (0.8 kgf/cm²) Below 160 kPa (1.6 kgf/cm²) at 3 000 r/min.	———

CLUTCH

Unit: mm

ITEM	STANDARD	LIMIT
Clutch wheel I.D.	135.00 – 135.20	135.50
Clutch shoe thickness	3.0	2.0
Clutch engagement	2 500 – 3 100 r/min.	———
Clutch lock-up	4 200 – 5 200 r/min.	———

TRANSMISSION

Unit: mm Except ratio

ITEM	STANDARD	LIMIT
Reduction ratio	Variable change 2.417 – 0.836	———
Final reduction ratio	8.066 (44/16 × 44/15)	———
Drive belt width	22.6	21.6
Movable drive face roller O.D.	23.72 – 23.88	———
Movable driven face spring free length	110	104.5

CARBURETOR

ITEM		SPECIFICATION
		E-02, 19, 71
Carburetor type		KEIHIN CVK30
Bore size		30 mm
I.D. No.		14F7
Idle r/min.		1 500 ± 100 r/min.
Float height		18.8 ± 1.0 mm
Main jet	(M.J.)	#108
Main air jet	(M.A.J.)	Press-fitted
Jet needle	(J.N.)	N7AE
Needle jet	(N.J.)	ϕ 2.1
Throttle valve	(Th.V.)	θ=10°
Pilot jet	(P.J.)	#38
Pilot screw	(P.S.)	PRE-SET (1⅝ turns back)
Throttle cable play		2 – 4 mm

ELECTRICAL

ITEM		SPECIFICATION		NOTE
Spark plug		Type	ND: U24ETR NGK: CR8EK	
		Gap	0.6 – 0.7 mm	
Spark performance		Over 8 mm at 1 atm.		
Ignition coil resistance		Primary	3 – 5 Ω	Tester range: (× 1 Ω)
		Secondary	17 – 30 kΩ	Tester range: (× 1 kΩ)
Magneto coil resistance		Pick-up	184 – 276 Ω	Tester range: (× 100 Ω)
Generator no-load voltage		More than 56 V (AC) at 5 000 r/min.		
Regulated voltage		13.5 – 15.0 V at 5 000 r/min.		
Starter relay resistance		2 – 6 Ω		
Battery	Type designation	FTX9-BS		
	Capacity	12 V 28.8 kC (8 Ah)/10HR		

ITEM	SPECIFICATION		NOTE
Fuse size	Headlight	HI: 15 A LO: 15 A	
	Turn signal	15 A	
	Ignition	10 A	
	Taillight	10 A	
	Main	30 A	
Carburetor heater coil resistance	12 – 18 Ω		
Fuel level gauge resistance	Full	Approx. 5 Ω	
	Empty	Approx. 103 Ω	

WATTAGE

Unit: W

ITEM		SPECIFICATION
Headlight	HI	60
	LO	55
Position or city light		5
Brake light/taillight		21/5 × 2
Turn signal light		21 × 4
License light		5
Speedometer light		1.7 × 2
Fuel level meter light		1.7
Engine coolant temp. meter light		1.7
Turn signal indicator light		1.7 × 2
High beam indicator light		1.7
Trunk light		5
Brake lock indicator light		1.7

BRAKE + WHEEL

Unit: mm

ITEM		STANDARD		LIMIT
Brake disc thickness		Front	4.5 ± 0.2	4.0
		Rear	5.0 ± 0.2	4.5
Brake disc runout		Front & Rear	———	0.30
Master cylinder bore		Front	11.000 – 11.043	———
		Rear	14.000 – 14.043	———
Master cylinder piston diam.		Front	10.957 – 10.984	———
		Rear	13.957 – 13.984	———
Brake caliper cylinder bore	Leading	Front	22.650 – 22.700	———
	Trailing		33.960 – 34.010	———
		Rear	25.400 – 25.450	———
Brake caliper piston diam.	Leading	Front	22.568 – 22.618	———
	Trailing		33.878 – 33.928	———
		Rear	25.335 – 25.368	———
Wheel rim runout		Axial	———	2.0
		Radial	———	2.0
Wheel axle runout		Front	———	0.25

ITEM	STANDARD		LIMIT
Tire size	Front	110/90-13 M/C 55P	———
	Rear	130/70-13 M/C 63P	———
Tire type	Front	HOOP B03 G	———
	Rear	HOOP B02 G	———
Wheel rim size	Front	13 M/C × MT3.00	———
	Rear	13 M/C × MT3.50	———
Tire tread depth	Front	———	1.6
	Rear	———	2.0

SUSPENSION

Unit: mm

ITEM	STANDARD	LIMIT	NOTE
Front fork stroke	100	———	
Front fork spring free length	330.4	323	
Front fork oil level	96	———	
Rear wheel travel	100	———	

TIRE PRESSURE

COLD INFLATION TIRE PRESSURE	SOLO RIDING		DUAL RIDING	
	kPa	kgf/cm²	kPa	kgf/cm²
FRONT	175	1.75	175	1.75
REAR	200	2.00	280	2.80

FUEL + OIL + ENGINE COOLANT

ITEM	SPECIFICATION		NOTE
Fuel type	Gasoline used should be graded 91 octane or higher. An unleaded gasoline is recommended.		
Fuel tank capacity	13.0 L		
Enigne oil type	SAE 10W/40, API SF or SG		
Engine oil capacity	Change	1 900 ml	
	Filter change	2 000 ml	
	Overhaul	2 300 ml	
Final gearbox oil type	SAE 10W/40, API SF or SG		
Final gearbox oil capacity	Change	190 ml	
	Overhaul	200 ml	
Front fork oil type	Fork oil #10		
Front fork oil capacity (each leg)	281 ml		
Brake fluid type	DOT 4		
Engine coolant type	Use an anti-freeze/coolant compatible with aluminum radiator, mixed with distilled water only, at the ratio of 50 : 50.		
Engine coolant capacity	Reservoir only	250 ml	
	Without reservoir	1 500 ml	

THERMOSTAT + RADIATOR + FAN

ITEM		STANDARD	LIMIT
Thermostat valve opening temperature		Approx. 75°C (167°F)	———
Thermostat valve lift		Over 3 mm at 90°C (194°F)	———
Radiator cap valve opening pressure		110 kPa (1.1 kgf/cm^2)	———
Cooling fan thermo-switch operating temperature	OFF → ON	* Approx. 98°C (208°F)	———
	ON → OFF	* Approx. 92°C (198°F)	———
Engine coolant temperature sensor resistance	50°C (122°F)	140 – 310 Ω	———
	115°C (239°F)	24.1 – 28.2 Ω	———

PERIODIC MAINTENANCE SCHEDULE

The chart below lists the recommended intervals for all the required periodic service work necessary to keep the motorcycle operating at peak performance and economy. Mileages are expressed in terms of kilometer, miles and time for your convenience.

NOTE:
More frequent servicing may be performed on motorcycles that are used under severe conditions.

PERIODIC MAINTENANCE CHART

Interval / Item	km	1 000	5 000	10 000	15 000
	months	3	15	30	45
Valve clearance		I	I	I	I
Spark plug		—	I	R	I
Exhaust pipe bolts and muffler bolts		T	T	T	T
Air cleaner element		Clean every 3 000 km.			
Idle speed		I	I	I	I
Throttle cable play		I	I	I	I
* Drive belt		Inspect every 12 000 km.			
Cooling fan filter		Clean every 3 000 km.			
Radiator hose		I	—	I	—
		Replace every four years.			
Engine coolant		Replace every two years.			
Fuel line		I	I	I	I
		Replace every four years.			
Engine oil		R	R	R	R
Engine oil filter		R	—	R	—
Final gear oil		—	—	I	—
Brakes		I	I	I	I
Brake hose		—	I	I	I
		Replace every four years.			
Brake fluid		—	I	I	I
		Replace every two years.			
Steering		I	—	I	—
Front forks		—	—	I	—
Rear suspensions		—	—	I	—
Tires		I	I	I	I
Chassis bolts and nuts		T	T	T	T

I=Inspect and adjust, clean, lubricate or replace as necessary
C=Clean R=Replace T=Tighten

CARBURETOR HEATER (FOR E-02)

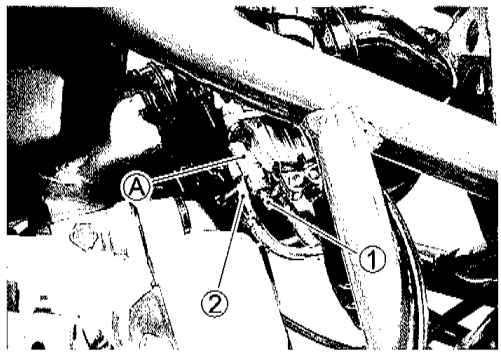

INSPECTION

- Disconnect the carburetor heater terminal lead wires.
- Connect the positive ⊕ terminal of a 12 V battery to the terminal ① of the carburetor heater and the battery negative ⊖ terminal to the terminal ②.
- Check that the heater section Ⓐ is heated in 5 minutes after the battery has been connected.
- Measure the resistance between the terminals.

DATA Carbaretor heater resistance STD: 4 – 13 Ω

TOOL 09900-25008: Multi-circuit tester

Tester knob indication: Resistance (Ω)

REASSEMBLY

- Apply thermo-grease to the threads ① and tighten the carburetor heater.

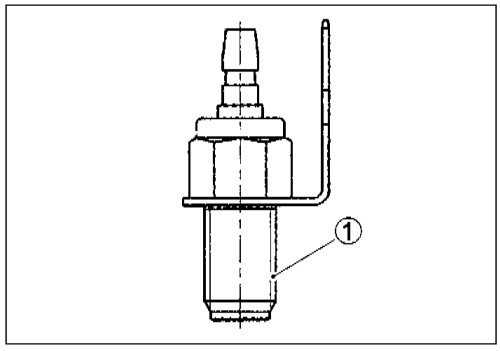

TOOL 99000-59029: THERMO-GREASE

Carburetor heater: 5 N·m (0.5 kgf·m)

AN250RK2 (2002-MODEL)

This chapter describes service data, service specifications and servicing procedures which differ from those of the AN250K2 (2000-model).

NOTE:
- *Any difference between the AN250K2 and AN250RK2 in specifications and service data are indicated with an asterisk mark (*).*
- *Please refer to the chapter 1 through 12 for details which are not given in this chapter.*

CONTENTS

SPECIFICATIONS

DIMENSIONS AND DRY MASS

Overall length	2 260 mm
Overall width	765 mm
Overall height	1 365 mm
Wheelbase	1 590 mm
Ground clearance	120 mm
Dry mass	166 kg

ENGINE

Type	Four-stroke, OHC
Number of cylinders	1
Bore	73.0 mm
Stroke	59.6 mm
Displacement	249 cm^3
Corrected compression ratio	10.5 : 1
Carburetor	KEIHIN CVK30, single
Air cleaner	Plyurethane foam element
Starter system	Electric starter
Lubrication system	Wet sump

TRANSMISSION

Clutch	Dry shoe, automatic, centrifugal type
Raduction ratio	Variable change (2.417 – 0.836)
Final reduction ratio	8.066 (44/16 × 44/15)
Drive system	V-belt drive

CHASSIS

Front suspension	Telescopic, coil spring, oil damped
Rear suspension	Link type, gas/coil spring, gas/oil damped
Caster	27°
Trail	106 mm
Steering angle	40° (left & right)
Turning radius	2.8 m
Front tire size	110/90-13M/C 55P
Rear tire size	130/70-13M/C 63P
Front brake	Disc brake
Combination brake	Disc brake

ELECTRICAL

Ignition type	Electronic ignition (Transistorized)
Ignition timing	8° B.T.D.C. at 1 500 rpm
Spark plug	NGK CR8EK or DENSO U24ETR
Battery	12 V 28.8 kC (8 Ah)/10 HR
Generator	Three-phase A.C. Generator
Fuse	30/15/15/10/15/10 A
Headlight	12 V 60/55 W (H4)
Position light	12 V 5 W
Turn signal light	12 V 21 W × 4
Brake light/taillight	12 V 21/5 W × 2
License plate light	12 V 5 W
Trunk light	12 V 5 W
Speedometer light	12 V 1.7 W × 4
High beam indicator light	12 V 1.7 W
Turn signal indicator light	12 V 1.7 W × 2
Coolant temperature gauge light	12 V 1.7 W
Fuel level gauge light	12 V 1.7 W
Brake lock indicator light	12 V 1.7 W

CAPACITIES

Fuel tank	13.0 L
Engine oil, oil change	1 900 ml
with filter change	2 000 ml
Final gear oil	190 ml
Coolant	1 500 ml

SERVICE DATA

VALVE + GUIDE

Unit: mm

ITEM	STANDARD		LIMIT
Valve diam.	IN.	28.3	———
	EX.	25.0	———
Valve clearance (when cold)	IN.	0.08 – 0.13	———
	EX.	0.17 – 0.22	———
Valve guide to valve stem clearance	IN.	0.010 – 0.037	———
	EX.	0.030 – 0.057	———
Valve stem deflection	IN. & EX.	———	0.35
Valve guide I.D.	IN. & EX.	5.000 – 5.012	———
Valve stem O.D.	IN.	4.975 – 4.990	———
	EX.	4.955 – 4.970	———
Valve stem runout	IN. & EX.	———	0.05
Valve head thickness	IN. & EX.	———	0.5
Valve stem end length	IN. & EX.	———	1.8
Valve seat width	IN. & EX.	0.9 – 1.1	———
Valve head radial runout	IN. & EX.	———	0.03
Valve spring free length (IN. & EX.)	INNER	———	34.9
	OUTER	———	38.2
Valve spring tension (IN. & EX.)	INNER	5.3 – 6.5 kgf at length 28 mm	———
	OUTER	13.1 – 15.1 kgf at length 31.5 mm	———

CAMSHAFT + CYLINDER HEAD

Unit: mm

ITEM	STANDARD		LIMIT
Cam height	IN.	33.43 – 33.47	33.13
	EX.	33.50 – 33.54	33.20
Camshaft journal oil clearance	ϕ 22	0.032 – 0.066	0.150
	ϕ 17.5	0.028 – 0.059	0.150
Camshaft journal holder I.D.	ϕ 22	22.012 – 22.025	———
	ϕ 17.5	17.512 – 17.525	———
Camshaft journal O.D.	ϕ 22	21.959 – 21.980	———
	ϕ 17.5	17.466 – 17.484	———
Rocker arm I.D.	IN. & EX.	12.000 – 12.018	———
Rocker arm shaft O.D.	IN. & EX.	11.973 – 11.984	———
Cylinder head distortion	———		0.05

CYLINDER + PISTON + PISTON RING

Unit: mm

ITEM	STANDARD			LIMIT
Compression pressure	1 480 kPa (14.8 kgf/cm²)			1 030 kPa (10.3 kgf/cm²)
Piston to cylinder clearance	0.040 – 0.050			0.120
Cylinder bore	73.000 – 73.015			73.090
Piston diam.	72.955 – 72.970 Measure at 15 mm from the skirt end.			72.880
Cylinder distortion	———			0.05
Piston ring free end gap	1st	R	Approx. 9.3	7.4
	2nd	R	Approx. 7.2	5.7
Piston ring end gap	1st		0.10 – 0.30	0.5
	2nd		0.35 – 0.50	1.0
Piston ring to groove clearance	1st		———	0.18
	2nd		———	0.15
Piston ring groove width	1st		1.01 – 1.04	———
	2nd		1.01 – 1.04	———
	Oil		2.01 – 2.03	———
Piston ring thickness	1st		0.97 – 0.99	———
	2nd		0.97 – 0.99	———
Piston pin bore	19.002 – 19.008			19.030
Piston pin O.D.	18.996 – 19.000			18.980

CONROD + CRANKSHAFT

Unit: mm

ITEM	STANDARD	LIMIT
Conrod small end I.D.	19.006 – 19.014	19.040
Conrod deflection	———	3.0
Conrod big end side clearance	0.10 – 0.65	1.00
Conrod big end width	21.95 – 22.00	———
Crank web to web width	60.0 ± 0.1	———
Crankshaft runout	———	0.08

OIL PUMP

ITEM	STANDARD	LIMIT
Oil pump reduction ratio	1.470 (25/17)	———
Oil pressure (at 60°C, 140°F)	Above 80 kPa (0.8 kgf/cm²) Below 160 kPa (1.6 kgf/cm²) at 3 000 r/min.	———

CLUTCH

Unit: mm

ITEM	STANDARD	LIMIT
Clutch wheel I.D.	135.00 – 135.20	135.50
Clutch shoe thickness	3.0	2.0
Clutch engagement	2 500 – 3 100 r/min.	———
Clutch lock-up	4 200 – 5 200 r/min.	———

TRANSMISSION

Unit: mm Except ratio

ITEM	STANDARD	LIMIT
Reduction ratio	Variable change 2.417 – 0.836	———
Final reduction ratio	8.066 (44/16 × 44/15)	———
Drive belt width	22.6	21.6
Movable drive face roller O.D.	23.72 – 23.88	———
Movable driven face spring free length	110	104.5

CARBURETOR

ITEM		SPECIFICATION
		E-19
Carburetor type		KEIHIN CVK30
Bore size		30 mm
I.D. No.		14F7
Idle r/min.		1 500 ± 100 r/min.
Float height		18.8 ± 1.0 mm
Main jet	(M.J.)	#108
Main air jet	(M.A.J.)	Press-fitted
Jet needle	(J.N.)	N7AE
Needle jet	(N.J.)	ϕ 2.1
Throttle valve	(Th.V.)	θ=10°
Pilot jet	(P.J.)	#38
Pilot screw	(P.S.)	PRE-SET (1⅝ turns back)
Throttle cable play		2 – 4 mm

ELECTRICAL

ITEM		SPECIFICATION		NOTE
Spark plug		Type	ND: U24ETR NGK: CR8EK	
		Gap	0.6 – 0.7 mm	
Spark performance		Over 8 mm at 1 atm.		
Ignition coil resistance		Primary	3 – 5 Ω	Tester range: (× 1 Ω)
		Secondary	17 – 30 kΩ	Tester range: (× 1 kΩ)
Magneto coil resistance		Pick-up	184 – 276 Ω	Tester range: (× 100 Ω)
Generator no-load voltage		More than 56 V (AC) at 5 000 r/min.		
Regulated voltage		13.5 – 15.0 V at 5 000 r/min.		
Starter relay resistance		2 – 6 Ω		
Battery	Type designation	FTX9-BS		
	Capacity	12 V 28.8 kC (8 Ah)/10HR		

ITEM	SPECIFICATION		NOTE
Fuse size	Headlight	HI: 15 A LO: 15 A	
	Turn signal	15 A	
	Ignition	10 A	
	Taillight	10 A	
	Main	30 A	
Carburetor heater coil resistance	12 – 18 Ω		
Fuel level gauge resistance	Full	Approx. 5 Ω	
	Empty	Approx. 103 Ω	

WATTAGE

Unit: W

ITEM		SPECIFICATION
Headlight	HI	60
	LO	55
Position or city light		5
Brake light/taillight		21/5 × 2
Turn signal light		21 × 4
License light		5
Speedometer light		*1.7 × 4
Fuel level meter light		1.7
Engine coolant temp. meter light		1.7
Turn signal indicator light		1.7 × 2
High beam indicator light		1.7
Trunk light		5
Brake lock indicator light		1.7

BRAKE + WHEEL

Unit: mm

ITEM		STANDARD		LIMIT
Brake disc thickness		Front	4.5 ± 0.2	4.0
		Rear	5.0 ± 0.2	4.5
Brake disc runout		Front & Rear	———	0.30
Master cylinder bore		Front	11.000 – 11.043	———
		Rear	14.000 – 14.043	———
Master cylinder piston diam.		Front	10.957 – 10.984	———
		Rear	13.957 – 13.984	———
Brake caliper cylinder bore	Leading	Front	22.650 – 22.700	———
	Trailing		33.960 – 34.010	———
		Rear	25.400 – 25.450	———
Brake caliper piston diam.	Leading	Front	22.568 – 22.618	———
	Trailing		33.878 – 33.928	———
		Rear	25.335 – 25.368	———
Wheel rim runout		Axial	———	2.0
		Radial	———	2.0
Wheel axle runout		Front	———	0.25

ITEM	STANDARD		LIMIT
Tire size	Front	110/90-13 M/C 55P	———
	Rear	130/70-13 M/C 63P	———
Tire type	Front	HOOP B03 G	———
	Rear	HOOP B02 G	———
Wheel rim size	Front	13 M/C × MT3.00	———
	Rear	13 M/C × MT3.50	———
Tire tread depth	Front	———	1.6
	Rear	———	2.0

SUSPENSION

Unit: mm

ITEM	STANDARD	LIMIT	NOTE
Front fork stroke	100	———	
Front fork spring free length	330.4	323	
Front fork oil level	96	———	
Rear wheel travel	100	———	

TIRE PRESSURE

COLD INFLATION TIRE PRESSURE	SOLO RIDING		DUAL RIDING	
	kPa	kgf/cm²	kPa	kgf/cm²
FRONT	175	1.75	175	1.75
REAR	200	2.00	280	2.80

FUEL + OIL + ENGINE COOLANT

ITEM	SPECIFICATION		NOTE
Fuel type	Gasoline used should be graded 91 octane or higher. An unleaded gasoline is recommended.		
Fuel tank capacity	13.0 L		
Enigne oil type	SAE 10W/40, API SF or SG		
Engine oil capacity	Change	1 900 ml	
	Filter change	2 000 ml	
	Overhaul	2 300 ml	
Final gearbox oil type	SAE 10W/40, API SF or SG		
Final gearbox oil capacity	Change	190 ml	
	Overhaul	200 ml	
Front fork oil type	Fork oil #10		
Front fork oil capacity (each leg)	281 ml		
Brake fluid type	DOT 4		
Engine coolant type	Use an anti-freeze/coolant compatible with aluminum radiator, mixed with distilled water only, at the ratio of 50 : 50.		
Engine coolant capacity	Reservoir only	250 ml	
	Without reservoir	1 500 ml	

THERMOSTAT + RADIATOR + FAN

ITEM		STANDARD	LIMIT
Thermostat valve opening temperature		* Approx. 82°C (180°F)	———
Thermostat valve lift		Over 3 mm at 90°C (194°F)	———
Radiator cap valve opening pressure		110 kPa (1.1 kgf/cm^2)	———
Cooling fan thermo-switch operating temperature	OFF → ON	* Approx. 98°C (208°F)	———
	ON → OFF	* Approx. 92°C (198°F)	
Engine coolant temperature sensor resistance	50°C (122°F)	140 – 310 Ω	———
	115°C (239°F)	24.1 – 28.2 Ω	———

CARBURETOR HEATER

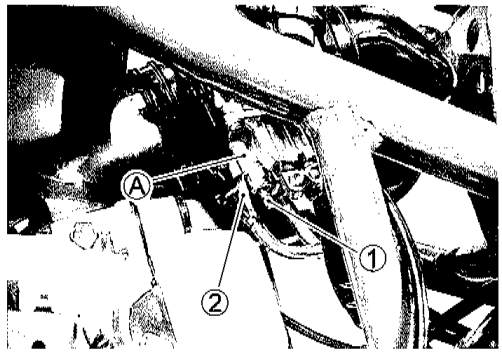

INSPECTION

- Disconnect the carburetor heater terminal lead wires.
- Connect the positive ⊕ terminal of a 12 V battery to the terminal ① of the carburetor heater and the battery negative ⊖ terminal to the terminal ②.
- Check that the heater section Ⓐ is heated in 5 minutes after the battery has been connected.
- Measure the resistance between the terminals.

DATA Carbaretor heater resistance STD: 4 – 13 Ω

TOOL 09900-25008: Multi-circuit tester

Tester knob indication: Resistance (Ω)

REASSEMBLY

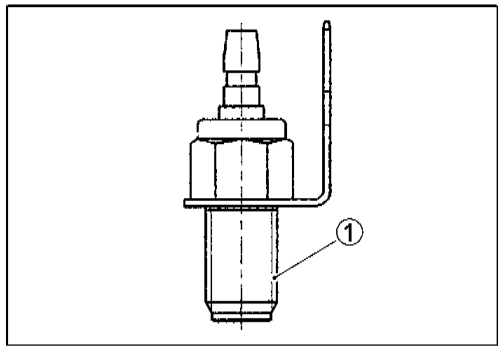

- Apply thermo-grease to the threads ① and tighten the carburetor heater.

TOOL 99000-59029: THERMO-GREASE

Carburetor heater: 5 N·m (0.5 kgf·m)

CARBURETOR THERMO-SWITCH

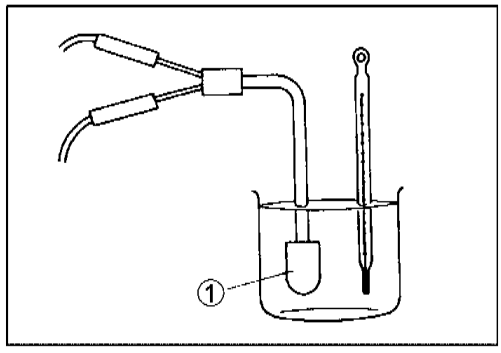

INSPECTION

- Cool the thermo-switch ① with ice water and check for continuity.

TOOL 09920-25008: Multi-circuit tester

DATA

Thermo-switch continuty	Below 8 – 14°C	Yes
	Above 16 – 22°C	No

WATER TEMPERATURE GAUGE

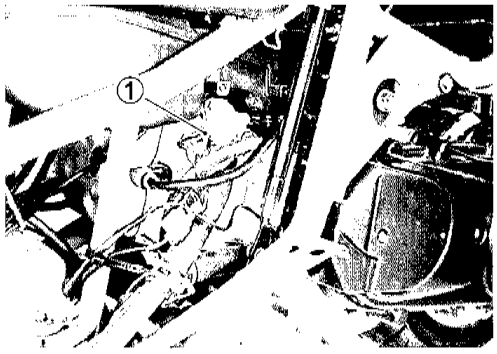

INSPECTION

- For the inspection procedure, refer to page 5-7.
- Remove the frame cover. (See page 6-1.)
- Disconnect the water temperature gauge terminal ①.

With the ignition switch turned on and a variable resister connected between the black/green lead and ground, check for the water temperature gauge needle indication when the resistance is adjusted to the specified values.
If the indication excessively deviates from the standard value, replace the water temperature gauge.

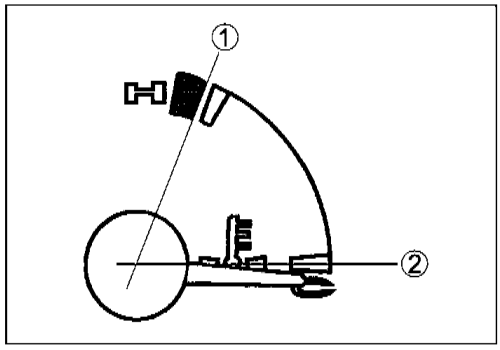

Water temperature gauge needle indication		
Resistance Ω	Approx. 180Ω	Approx. 18Ω
Needle position	①	②

REAR WHEEL

REASSEMBLY

When installing the rear axle washer to the rear axle, make sure that the grinding surface of washer faces the rear wheel.

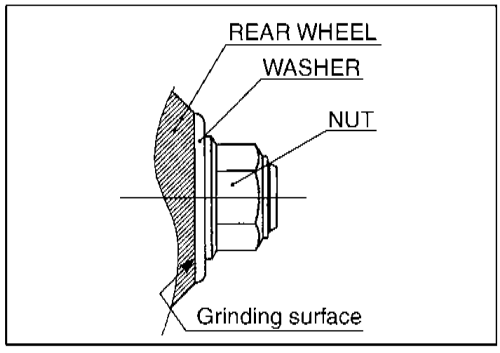

MUFFLER

The AN250RK2 is equipped with the catalyst. The catalyst is mounted in the muffler.

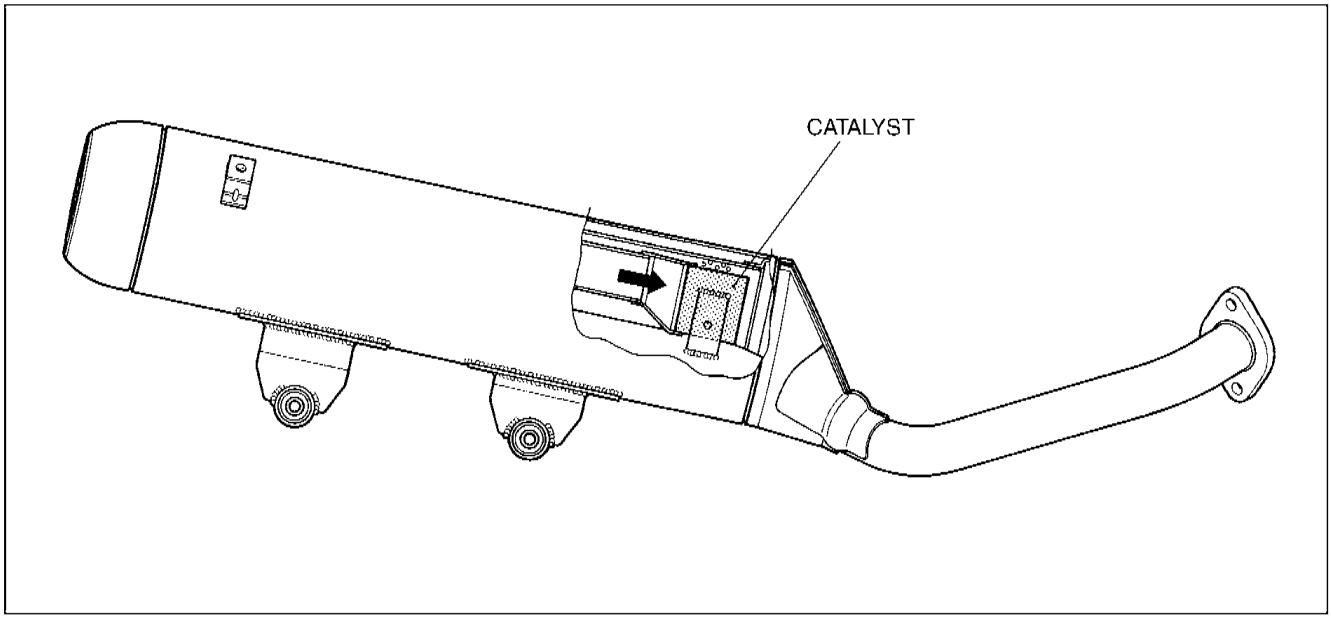

Prepared by

SUZUKI MOTOR CORPORATION

Motorcycle Service Department
3rd Ed. December, 2001
1st Ed. May, 1998
Part No. 99500-32113-01E
Printed in Japan

SUZUKI MOTOR CORPORATION

Printed in Japan (TK)
W X Y K1 K2