IMPORTANT

WARNING/CAUTION/NOTE

Please read this manual and follow its instructions carefully. To emphasize special information, the words **WARNING, CAUTION** and **NOTE** have special meanings. Pay special attention to the messages highlighted by these signal words.

WARNING:
Indicates a potential hazard that could result in death or injury.

CAUTION:
Indicates a potential hazard that could result in vehicle damage.

NOTE:
Indicates special information to make maintenance easier or instructions clearer.

WARNING:
This service manual is intended for authorized Suzuki dealers and qualified service mechanics only. Inexperienced mechanics or mechanics without the proper tools and equipment may not be able to properly perform the services described in this manual.
Improper repair may result in injury to the mechanic and may render the vehicle unsafe for the driver and passengers.

WARNING:
For vehicles equipped with a Supplemental Restraint Air Bag System:

- **Service on and around the air bag system components or wiring must be performed only by an authorized SUZUKI dealer.**
  Please observe all WARNINGS and CAUTIONS in SECTION 10B and Precautions, Air Bag System Components and Wiring Location View in SECTION 10B or before performing service on or around the air bag system components or wiring. Failure to follow WARNINGS could result in unintentional activation of the system or could render the system inoperative. Either of these two conditions may result in severe injury.
- **If the air bag system and another vehicle system both need repair, Suzuki recommends that the air bag system be repaired first, to help avoid unintended air bag deployment.**
- **Do not modify the steering wheel, instrument panel or any other air bag system component (on or around air bag system components or wiring). Modifications can adversely affect air bag system performance and lead to injury.**
- **If the vehicle will be exposed to temperatures over 93°C (200°F)(for example, during a paint baking process), remove the air bag system components (air bag (inflator) modules, SDM and/or seatbelt with pretensioner) beforehand to avoid component damage or unintended deployment.**

FOREWORD

This manual contains procedures for diagnosis, maintenance, adjustments, minor service operations, replacement of components (Service) and for disassembly and assembly of major components (Unit Repair-Overhaul).

Applicable model: RB413

The contents are classified into sections each of which is given a section number as indicated in the Table of Contents on following page. And on the first page of each individual section is an index of that section.
This manual should be kept in a handy place for ready reference of the service work.
Strict observance of the so specified items will enable one to obtain the full performance of the vehicle.

When replacing parts or servicing by disassembling, it is recommended to use SUZUKI genuine parts, tools and service materials (lubricant, sealants, etc.) as specified in each description.

All information, illustrations and specifications contained in this literature are based on the latest product information available at the time of publication approval. And used as the main subject of description is the vehicle of standard specifications among others. Therefore, note that illustrations may differ from the vehicle being actually serviced.
The right is reserved to make changes at any time without notice.

Related Manual

Manual Name	Manual No.
RB413 WIRING DIAGRAM MANUAL	99512-83E00-669

MAGYAR SUZUKI CORPORATION

OVERSEAS SERVICE DEPARTMENT

NOTE:
The screen toned Section 8A WIRING DIAGRAM is not contained in this manual.
The Section 8A is contained in WIRING DIAGRAM MANUAL mentioned in FOREWORD of this manual.

SECTION 0A

GENERAL INFORMATION

CONTENTS

HOW TO USE THIS MANUAL

1) There is a TABLE OF CONTENTS FOR THE WHOLE MANUAL on the third page of this manual, whereby you can easily find the section that offers the information you need. Also, there is a CONTENTS on the first page of EACH SECTION, where the main items in that section are listed.
2) Each section of this manual has its own pagination. It is indicated at the top of each page along with the Section name.
3) The SPECIAL TOOL usage and TORQUE SPECIFICATION are given as shown in figure below.

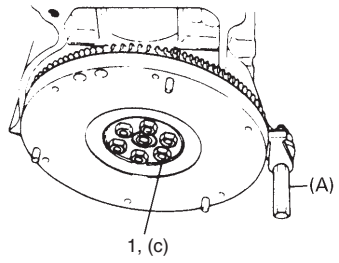

1. Flywheel bolts or drive plate bolts for A/T vehicle

6) Install oil pump. Refer to “Oil pump”.
7) Install flywheel (for M/T vehicle) or drive plate (for A/T vehicle).
   Using special tool, lock flywheel or drive plate, and tighten flywheel or drive plate bolts to specified torque.

   Special Tool
   (A): 09924-17810
   Tightening Torque
   (c): 78 N·m (7.8 kg-m, 56.0 lb-ft)

4) A number of abbreviations are used in the text.
   For their full explanations, refer to **“ABBREVIATIONS MAY BE USED IN THIS MANUAL”** of this section.
5) The SI, metric and foot-pound systems are used as units in this manual.
6) DIAGNOSIS are included in each section as necessary.
7) At the end of each section, there are descriptions of SPECIAL TOOLS, REQUIRED SERVICE MATERIALS and TIGHTENING TORQUE SPECIFICATIONS that should be used for the servicing work described in that section.

PRECAUTIONS

PRECAUTION FOR VEHICLES EQUIPPED WITH A SUPPLEMENTAL RESTRAINT SYSTEM

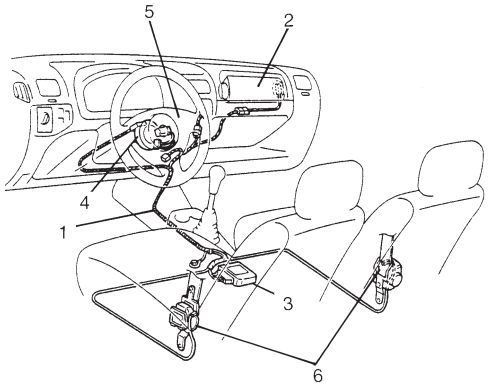

1. Air bag wire harness
2. Passenger air bag (inflator) module (if equipped)
3. SDM
4. Contact coil
5. Driver air bag (inflator) module
6. Seat belt pretensioner

WARNING:

- **The configuration of air bag system parts are as shown in the figure. When it is necessary to service (remove, reinstall and inspect) these parts, be sure to follow procedures described in SECTION 10B. Failure to follow proper procedures could result in possible air bag system activation, personal injury, damage to parts or air bag system being unable to activate when necessary.**
- **If the air bag system and another vehicle system both need repair, Suzuki recommends that the air bag system be repaired first, to help avoid unintended air bag system activation.**
- **Do not modify the steering wheel, dashboard, or any other air bag system components. Modifications can adversely affect air bag system performance and lead to injury.**
- **If the vehicle will be exposed to temperatures over 93°C (200°F) (for example, during a paint baking process), remove the air bag system components beforehand to avoid component damage or unintended air bag system activation.**

DIAGNOSIS

- **When troubleshooting air bag system, be sure to follow "DIAGNOSIS" in SECTION 10B. Bypassing these procedures may result in extended diagnostic time, incorrect diagnosis, and incorrect parts replacement.**
- **Never use electrical test equipment other than that specified in this manual.**

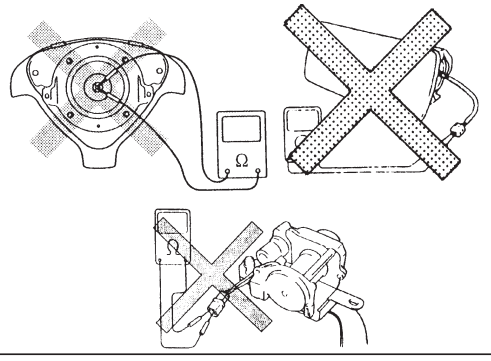

WARNING:

Never attempt to measure the resistance of the air bag (inflator) modules (driver and passenger) and seat belt pretensioners (driver and passenger). It is very dangerous as the electric current from the tester may deploy the air bag or activate the pretensioner.

ALWAYS CARRY AIR BAG (INFLATOR) MODULE WITH TRIM COVER (AIR BAG OPENING) AWAY FROM BODY.

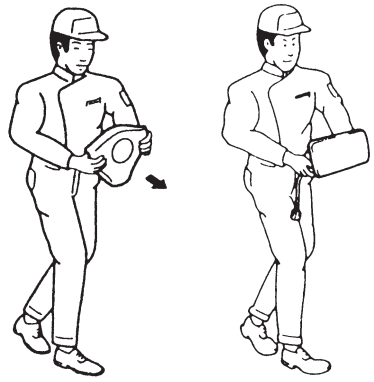

ALWAYS PLACE AIR BAG (INFLATOR) MODULE ON WORKBENCH WITH TRIM COVER (AIR BAG OPENING) UP, AWAY FROM LOOSE OBJECTS.

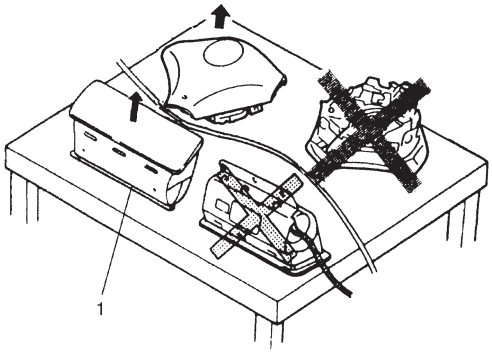

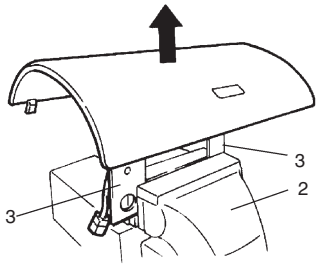

1. Slit on workbench
2. Workbench vise
3. Lower mounting bracket

SERVICING AND HANDLING

WARNING:

Many of service procedures require disconnection of "AIR BAG" fuse and all air bag (inflator) module(s) from initiator circuit to avoid an accidental deployment.

Driver and Passenger Air Bag (Inflator) Modules

- **For handling and storage of a live air bag (inflator) module, select a place where the ambient temperature below 65°C (150°F), without high humidity and away from electric noise.**
- **When carrying a live air bag (inflator) module, make sure the bag opening is pointed away from you. In case of an accidental deployment, the bag will then deploy with minimal chance of injury. Never carry the air bag (inflator) module by the wires or connector on the underside of the module. When placing a live air bag (inflator) module on a bench or other surface, always face the bag up, away from the surface. As the live passenger air bag (inflator) module must be placed with its bag (trim cover) facing up, place it on the workbench with a slit or use the workbench vise to hold it securely at its lower mounting bracket. This is necessary so that a free space is provided to allow the air bag to expand in the unlikely event of accidental deployment. Otherwise, personal injury may result.**
- **Never dispose of live (undeployed) air bag (inflator) modules (driver and passenger). If disposal is necessary, be sure to deploy them according to deployment procedures described in SECTION 10B before disposal.**
- **The air bag (inflator) module immediately after deployment is very hot. Wait for at least 10 minutes to cool it off before proceeding the work.**
- **After an air bag (inflator) module has been deployed, the surface of the air bag may contain a powdery residue. This powder consists primarily of cornstarch (used to lubricate the bag as it inflates) and by-products of the chemical reaction. As with many service procedures, gloves and safety glasses should be worn.**

WARNING:
SDM

- **During service procedures, be very careful when handling a Sensing and Diagnostic Module (SDM). Never strike or jar the SDM.**
- **Never power up the air bag system when the SDM is not rigidly attached to the vehicle. All SDM fasteners must be carefully torqued and the arrow must be pointing toward the front of the vehicle to ensure proper operation of the air bag system. The SDM could be activated when powered while not rigidly attached to the vehicle which could cause deployment and result in personal injury.**

WARNING:
Driver and Passenger Seat Belt Pretensioners

- **For handling and storage of a live seat belt pretensioner, select a place where the ambient temperature below 65°C (150°F), without high humidity and away from electric noise.**
- **Never carry the seat belt pretensioner by the wires or connector on the underside of the pretensioner.**
- **When placing a live seat belt pretensioner on the workbench or other surface, it is also prohibited to put a seat belt pretensioner on top of another. Otherwise, personal injury may result.**
- **Never dispose of live (inactivated) seat belt pretensioners (driver and passenger). If disposal is necessary, be sure to activate them according to activation procedures described in SECTION 10B before disposal.**
- **The seat belt pretensioner immediately after activation is very hot. Wait for at least 10 minutes to cool it off before proceeding the work.**
- **With many service procedures, gloves and safety glasses should be worn to prevent any possible irritation of the skin or eyes.**

CAUTION:

- **Even when the accident was light enough not to cause air bags to activate, be sure to inspect system parts and other related parts according to instructions under "Repair and Inspection Required after an Accident" in SECTION 10B.**
- **When servicing parts other than air bag system, if shocks may be applied to air bag system component parts, remove those parts beforehand.**
- **When handling the air bag (inflator) modules (driver and passenger), seat belt pretensioners (driver and passenger) or SDM, be careful not to drop it or apply an impact to it. If an excessive impact was applied (e.g., for air bag (inflator) modules and SDM; dropped from a height of 90 cm (3 feet) or more, for seat belt pretensioners; a height of 30 cm (1 foot) or more), never attempt disassembly or repair but replace it with a new one.**
- **When grease, cleaning agent, oil, water, etc. has got onto air bag (inflator) modules (driver and passenger) or seat belt pretensioners (driver and passenger), wipe off immediately with a dry cloth.**
- **Air bag wire harness can be identified easily as it is covered with a yellow protection tube. Be very careful when handling it.**
- **When an open in air bag wire harness, damaged wire harness, connector or terminal is found, replace wire harness, connectors and terminals as an assembly.**
- **Do not apply power to the air bag system unless all components are connected or a diagnostic chart requests it, as this will set a diagnostic trouble code.**
- **Never use air bag system component parts from another vehicle.**
- **When using electric welding, be sure to temporarily disable air bag system referring to "Disabling Air Bag System" described in "Service Precautions" in SECTION 10B.**
- **Never expose air bag system component parts directly to hot air (drying or baking the vehicle after painting) or flames.**
- **WARNING/CAUTION labels are attached on each part of air bag system components. Be sure to follow the instructions.**
- **After vehicle is completely repaired, perform "Air Bag Diagnostic System Check" described in "Diagnosis" in SECTION 10B.**

GENERAL PRECAUTIONS

The WARNING and CAUTION below describe some general precautions that you should observe when servicing a vehicle. These general precautions apply to many of the service procedures described in this manual, and they will not necessarily be repeated with each procedure to which they apply.

WARNING:

- **Whenever raising a vehicle for service, be sure to follow the instructions under "VEHICLE LIFTING POINTS" on SECTION 0A.**
- **When it is necessary to do service work with the engine running, make sure that the parking brake is set fully and the transmission is in Neutral (for manual transmission vehicles) or Park (for automatic transmission vehicles), Keep hands, hair, clothing, tools, etc. away from the fan and belts when the engine is running.**
- **When it is necessary to run the engine indoors, make sure that the exhaust gas is forced to stream outdoors.**
- **Do not perform service work in areas where combustible materials can come in contact with a hot exhaust system. When working with toxic or flammable materials (such as gasoline and refrigerant), make sure that the area you work in is well-ventilated.**
- **To avoid getting burned, keep away from hot metal parts such as the radiator, exhaust manifold, tail-pipe, muffler, etc.**
- **New and used engine oil can be hazardous. Children and pets may be harmed by swallowing new or used oil. Keep new and used oil and used engine oil filters away from children and pets. Continuous contact with used engine oil has been found to cause [skin] cancer in laboratory animals. Brief contact with used oil may irritate skin. To minimize your exposure to used engine oil, wear a long-sleeve shirt and moisture-proof gloves (such as dishwashing gloves) when changing engine oil. If engine oil contacts your skin, wash thoroughly with soap and water. Launder any clothing or rags if wet with oil, recycle or properly dispose of used oil and filters.**

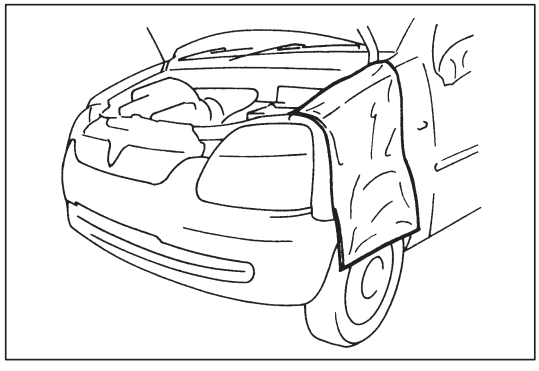

CAUTION:

- **Before starting any service work, cover fenders, seats and any other parts that are likely to get scratched or stained during servicing. Also, be aware that what you wear (e.g. buttons) may cause damage to the vehicle's finish.**

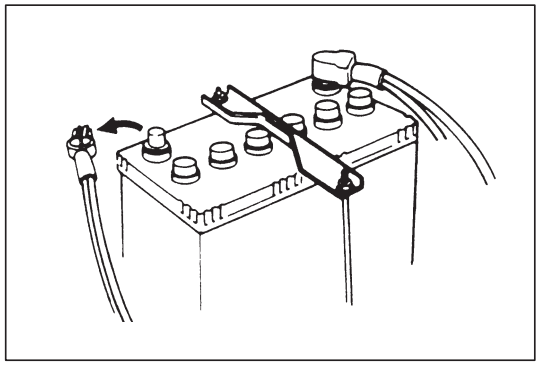

- **When performing service to electrical parts that does not require use of battery power, disconnect the negative cable of the battery.**

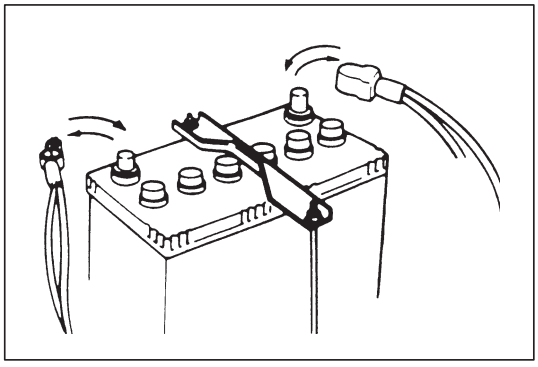

- **When removing the battery, be sure to disconnect the negative cable first and then the positive cable. When reconnecting the battery, connect the positive cable first and then the negative cable, and replace the terminal cover.**

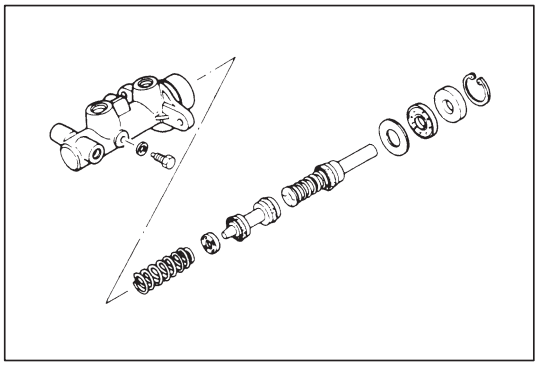

- **When removing parts that are to be reused, be sure to keep them arranged in an orderly manner so that they may be reinstalled in the proper order and position.**

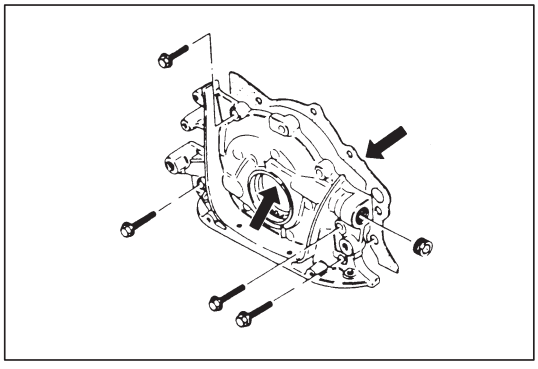

- **Whenever you use oil seals, gaskets, packing, O-rings, locking washers, split pins, self-locking nuts, and certain other parts as specified, be sure to use new ones. Also, before installing new gaskets, packing, etc., be sure to remove any residual material form the mating surfaces.**

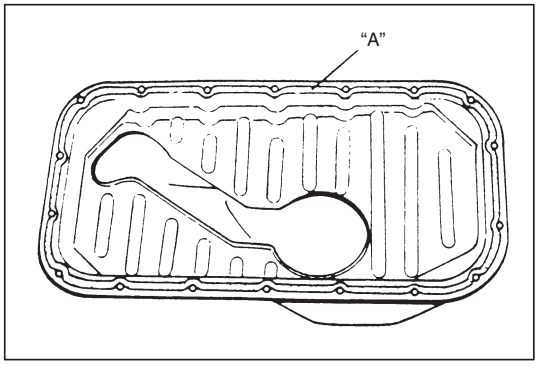

- **Make sure that all parts used in reassembly are perfectly clean.**
- **When use of a certain type of lubricant, bond or sealant is specified, be sure to use the specified type.**

  "A": Sealant 99000-31150

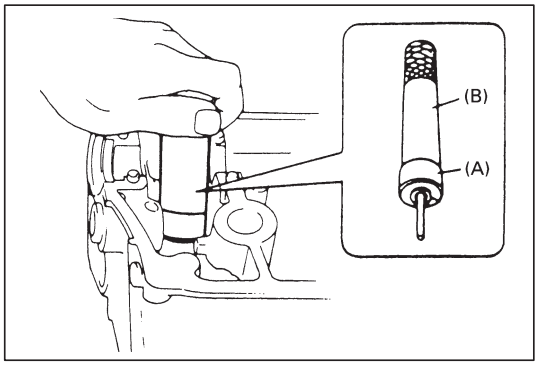

- **Be sure to use special tools when instructed.**

  Special Tool
  (A): 09917-98221
  (B): 09916-58210

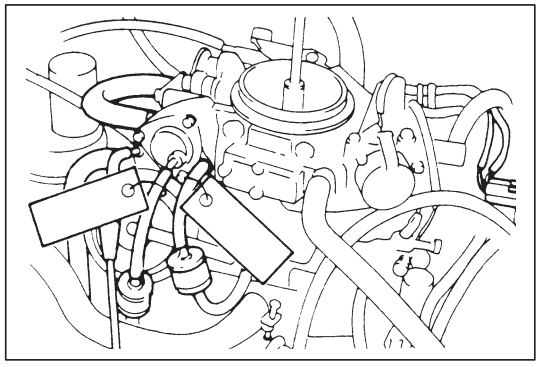

- **When disconnecting vacuum hoses, attach a tag describing the correct installation positions so that the hoses can be re-installed correctly.**

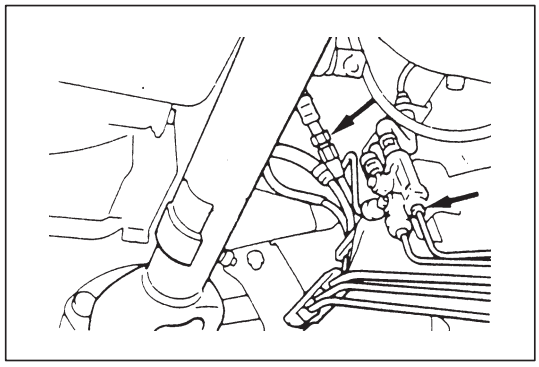

- **After servicing fuel, oil, coolant, vacuum, exhaust or brake systems, check all lines related to the system for leaks.**

- **For vehicles equipped with fuel injection systems, never disconnect the fuel line between the fuel pump and injector without first releasing the fuel pressure, or fuel can be sprayed out under pressure.**

PRECAUTIONS FOR CATALYTIC CONVERTER

For vehicles equipped with a catalytic converter, use only unleaded gasoline and be careful not to let a large amount of unburned gasoline enter the converter or it can be damaged.

- **Conduct a spark jump test only when necessary, make it as short as possible, and do not open the throttle.**
- **Conduct engine compression checks within the shortest possible time.**
- **Avoid situations which can result in engine misfire. (e.g. starting the engine when the fuel tank is nearly empty.)**

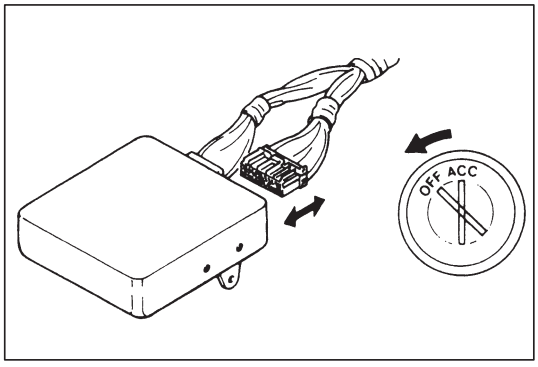

PRECAUTIONS FOR ELECTRICAL CIRCUIT SERVICE

- **When disconnecting and connecting coupler, make sure to turn ignition switch OFF, or electronic parts may get damaged.**

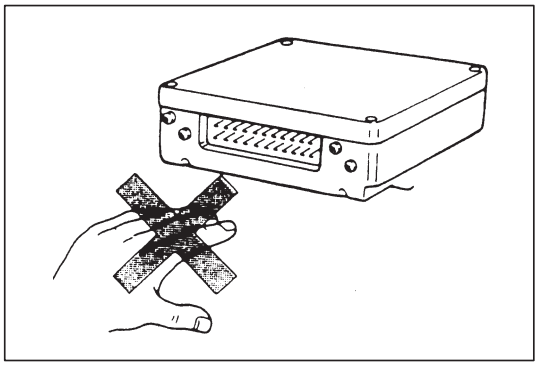

- **Be careful not to touch the electrical terminals of parts which use microcomputers (e.g. electronic control unit like as ECM, PCM, P/S controller, etc.). The static electricity from your body can damage these parts.**

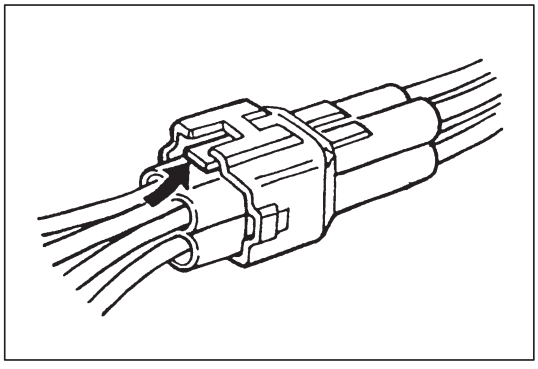

- **When disconnecting couplers, don't pull wire harness but make sure to hold coupler itself. With lock type coupler, be sure to unlock before disconnection. Attempt to disconnect coupler without unlocking may result in damage to coupler. When connecting lock type coupler, insert it till clicking sound is heard and connect it securely.**

- **Never connect any tester (voltmeter, ohmmeter, or whatever) to electronic control unit when its coupler is disconnected. Attempt to do it may cause damage to it.**
- **Never connect an ohmmeter to electronic control unit with its coupler connected to it. Attempt to do it may cause damage to electronic control unit and sensors.**
- **Be sure to use a specified voltmeter/ohmmeter. Otherwise, accurate measurements may not be obtained or personal injury may result. If not specified, use a voltmeter with high impedance (MΩ/V minimum) or a digital type voltmeter.**

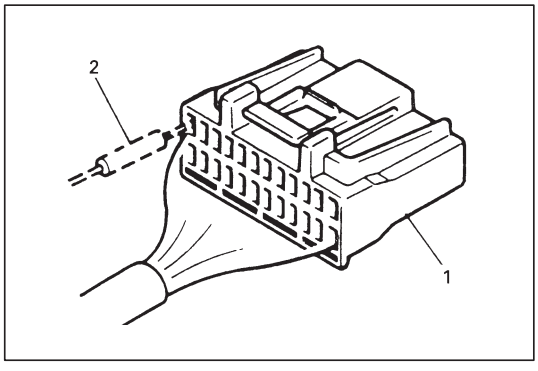

- **When taking measurements at electrical connectors using a tester probe, be sure to insert the probe (2) from the wire harness side (backside) of the connector (1).**

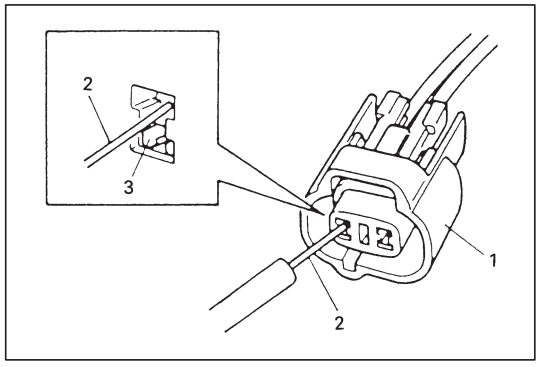

- **When connecting meter probe (2) from terminal side of coupler (1) because it can't be connected from harness side, use extra care not to bend male terminal of coupler of force its female terminal open for connection.**
  In case of such coupler as shown connect probe as shown to avoid opening female terminal.
  Never connect probe where (3) male terminal is supposed to fit.

- **When checking connection of terminals, check its male half for bend and female half for excessive opening and both for locking (looseness), corrosion, dust, etc.**

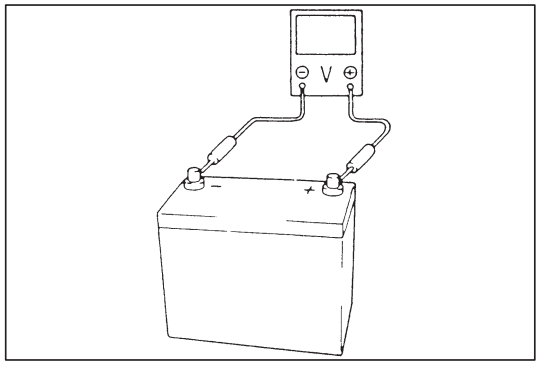

- **Before measuring voltage at each terminal, check to make sure that battery voltage is 11V or higher. Such terminal voltage check at low battery voltage will lead to erroneous diagnosis.**

ELECTRICAL CIRCUIT INSPECTION PROCEDURE

While there are various electrical circuit inspection methods, described here is a general method to check its open and short circuit by using an ohmmeter and a voltmeter.

OPEN CIRCUIT CHECK

Possible causes for the open circuit are as follows. As the cause is in the connector or terminal in many cases, they need to be checked particularly carefully.

- Loose connection of connector
- Poor contact of terminal (due to dirt, corrosion or rust on it, poor contact tension, entry of foreign object etc.)
- Wire harness being open

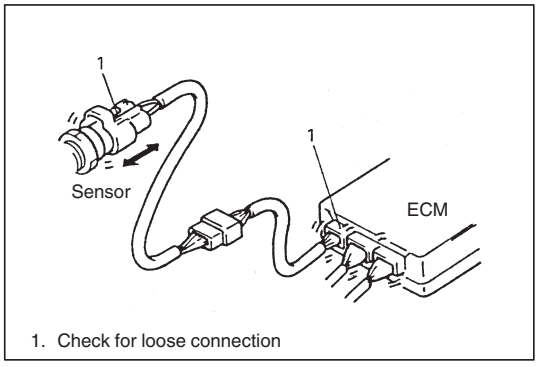

1. Check for loose connection

When checking system circuits including an electronic control unit such as ECM, TCM, ABS control module, etc., it is important to perform careful check, starting with items which are easier to check.

1) Disconnect negative cable from battery.
2) Check each connector at both ends of the circuit being checked for loose connection. Also check lock condition of connector if equipped with connector lock.

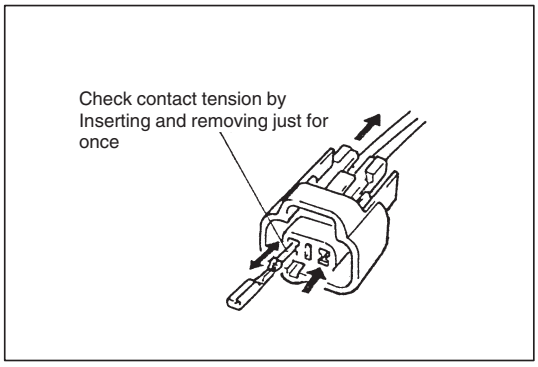

3) Using a test male terminal, check both terminals of the circuit being checked for contact tension of its female terminal.
   Check each terminal visually for poor contact (possibly caused by dirt, corrosion, rust entry of foreign object, etc.).
   At the same time, check to make sure that each terminal is locked in the connector fully.

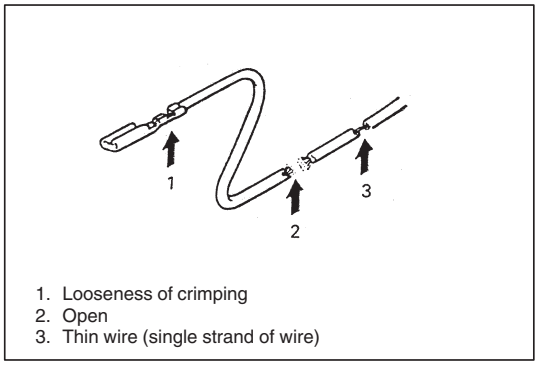

1. Looseness of crimping
2. Open
3. Thin wire (single strand of wire)

4) Using continuity check or voltage check procedure described in the following page, check the wire harness for open circuit and poor connection with its terminals. Locate abnormality, if any.

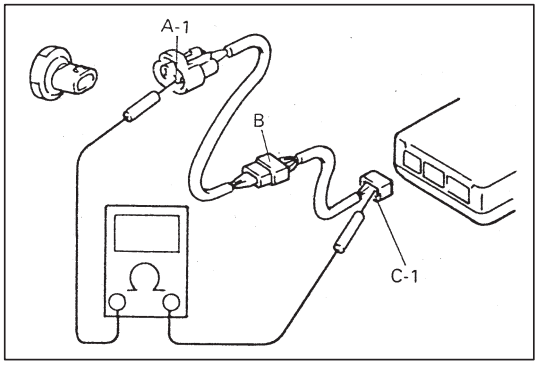

Continuity check

1) Measure resistance between connector terminals at both ends of the circuit being checked (between A-1 and C-1 in the figure).
   If no continuity is indicated (infinity or over limit), that means that the circuit is open between terminals A-1 and C-1.

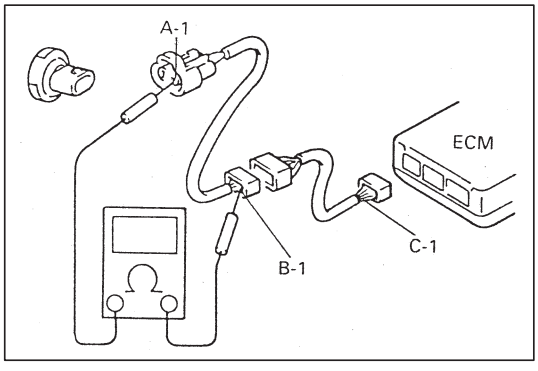

2) Disconnect the connector included in the circuit (connector-B in the figure) and measure resistance between terminals A-1 and B-1.
   If no continuity is indicated, that means that the circuit is open between terminals A-1 and B-1. If continuity is indicated, there is an open circuit between terminals B-1 and C-1 or an abnormality in connector-B.

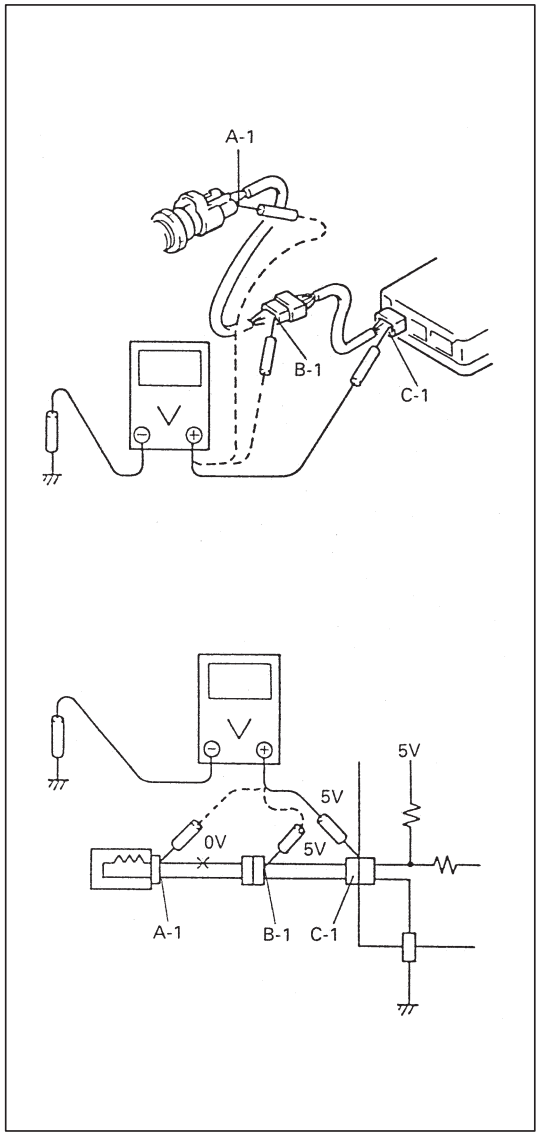

Voltage check

If voltage is supplied to the circuit being checked, voltage check can be used as circuit check.

1) With all connectors connected and voltage applied to the circuit being checked, measure voltage between each terminal and body ground.

If measurements were taken as shown in the figure at the left and results were as listed below, it means that the circuit is open between terminals B-1 and A-1.

Voltage Between:
C-1 and body ground: Approx. 5V
B-1 and body ground: Approx. 5V
A-1 and body ground: 0V

Also, if measured values were as listed below, it means that there is a resistance (abnormality) of such level that corresponds to the voltage drop in the circuit between terminals A-1 and B-1.

Voltage Between:
C-1 and body ground: Approx. 5V
B-1 and body ground: Approx. 5V
A-1 and body ground: Approx. 3V
2V voltage drop

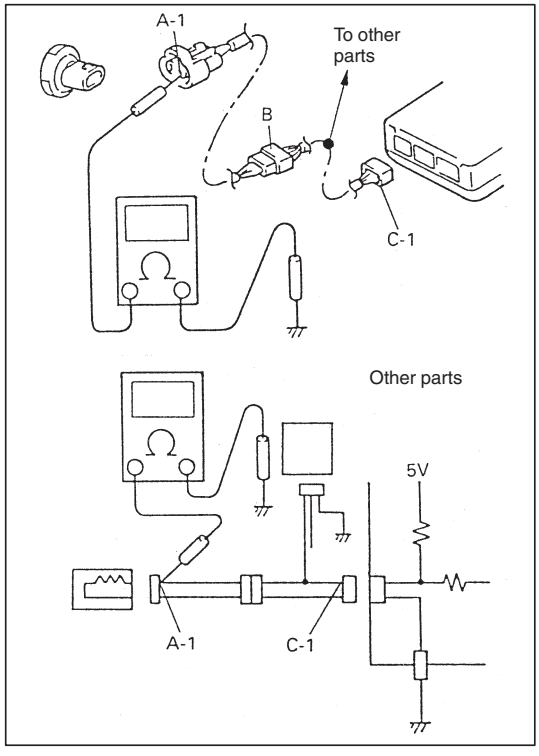

SHORT CIRCUIT CHECK (Wire harness to ground)

1) Disconnect negative cable from battery.
2) Disconnect connectors at both ends of the circuit to be checked.

NOTE:
If the circuit to be checked is connected to other parts, disconnect all connectors of those parts.
Otherwise, diagnosis will be misled.

3) Measure resistance between terminal at one end of circuit (A-1 terminal in figure) and body ground. If continuity is indicated, it means that there is a short to ground between terminals A-1 and C-1 of the circuit.

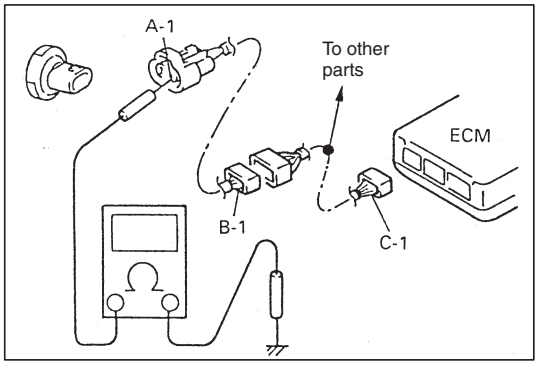

4) Disconnect the connector included in circuit (connector B) and measure resistance between A-1 and body ground.
   If continuity is indicated, it means that the circuit is shorted to the ground between terminals A-1 and B-1.

INTERMITTENTS AND POOR CONNECTION

Most intermittents are caused by faulty electrical connections or wiring, although a sticking relay or solenoid can occasionally be at fault. When checking it for proper connection, perform careful check of suspect circuits for:

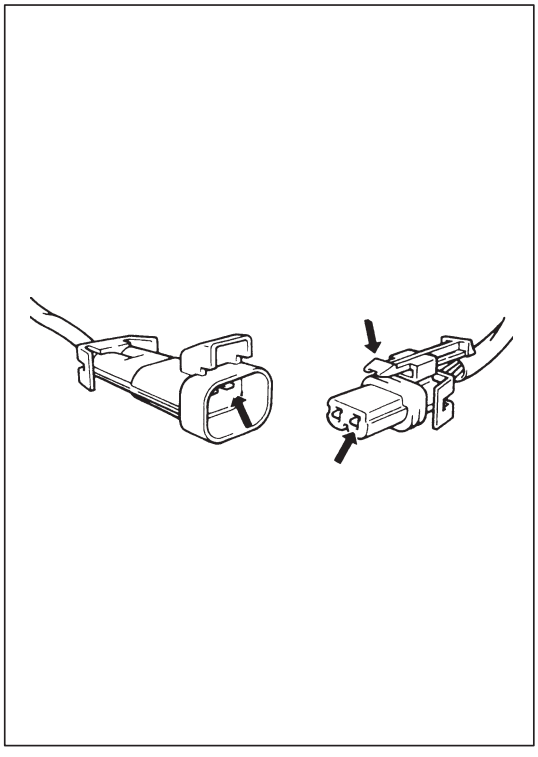

- Poor mating of connector halves, or terminals not fully seated in the connector body (backed out).
- Dirt or corrosion on the terminals. The terminals must be clean and free of any foreign material which could impede proper terminal contact.
  However, cleaning the terminal with a sand paper or the like is prohibited.
- Damaged connector body, exposing the terminals to moisture and dirt, as well as not maintaining proper terminal orientation with the component or mating connector.

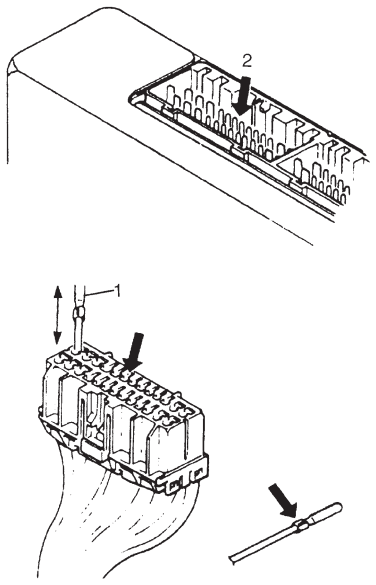

1. Check contact tension by inserting and removing just once.
2. Check each terminal for bend and proper alignment.

- Improperly formed or damaged terminals.
  Check each connector terminal in problem circuits carefully to ensure good contact tension by using the corresponding mating terminal.
  If contact tension is not enough, reform it to increase contact tension or replace.

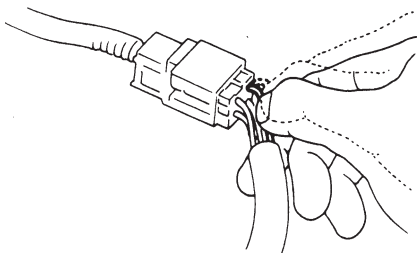

- Poor terminal-to-wire connection.
  Check each wire harness in problem circuits for poor connection by shaking it by hand lightly. If any abnormal condition is found, repair or replace.

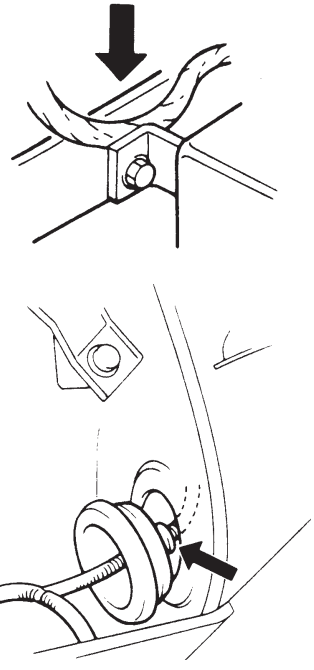

- Wire insulation which is rubbed through, causing an intermittent short as the bare area touches other wiring or parts of the vehicle.
- Wiring broken inside the insulation. This condition could cause continuity check to show a good circuit, but if only 1 or 2 strands of a multi-strand-type wire are intact, resistance could be far too high.
  If any abnormality is found, repair or replace.

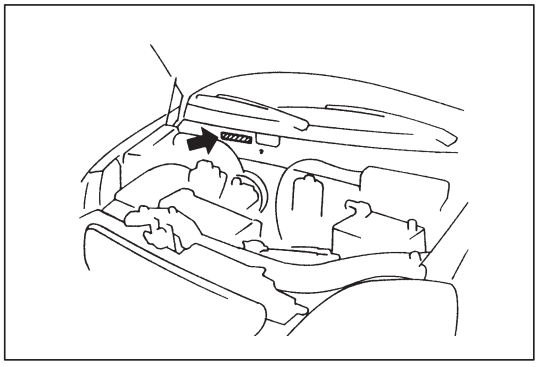

IDENTIFICATION INFORMATION

VEHICLE IDENTIFICATION NUMBER

The vehicle identification number is located on the front dash panel in the engine room.

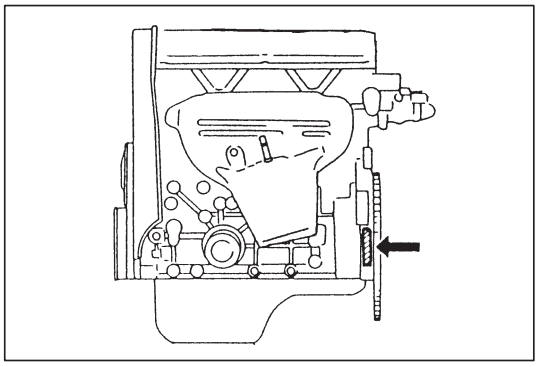

ENGINE IDENTIFICATION NUMBER

The number is punched on the cylinder block.

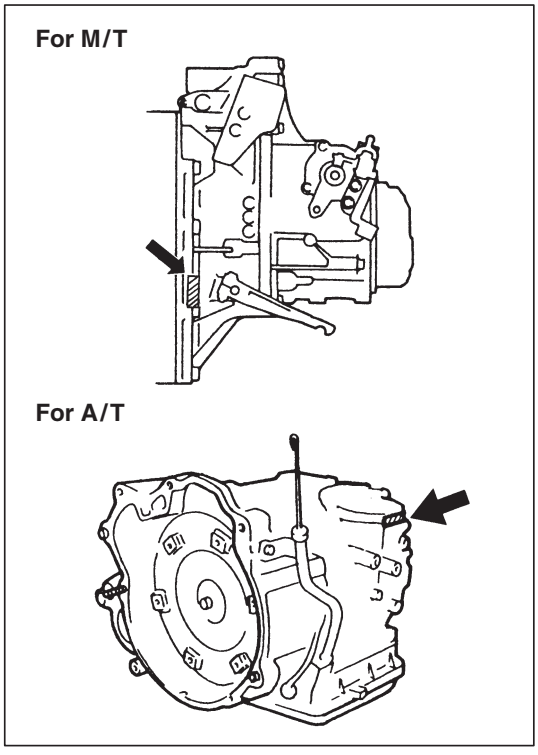

TRANSMISSION IDENTIFICATION NUMBER

The number is located on the transmission case.

WARNING, CAUTION AND INFORMATION LABELS

The figure below shows main labels among others that are attached to vehicle component parts.
When servicing and handling parts, refer to WARNING/CAUTION instructions printed on labels.
If any WARNING/CAUTION label is found stained or damaged, clean or replace it as necessary.

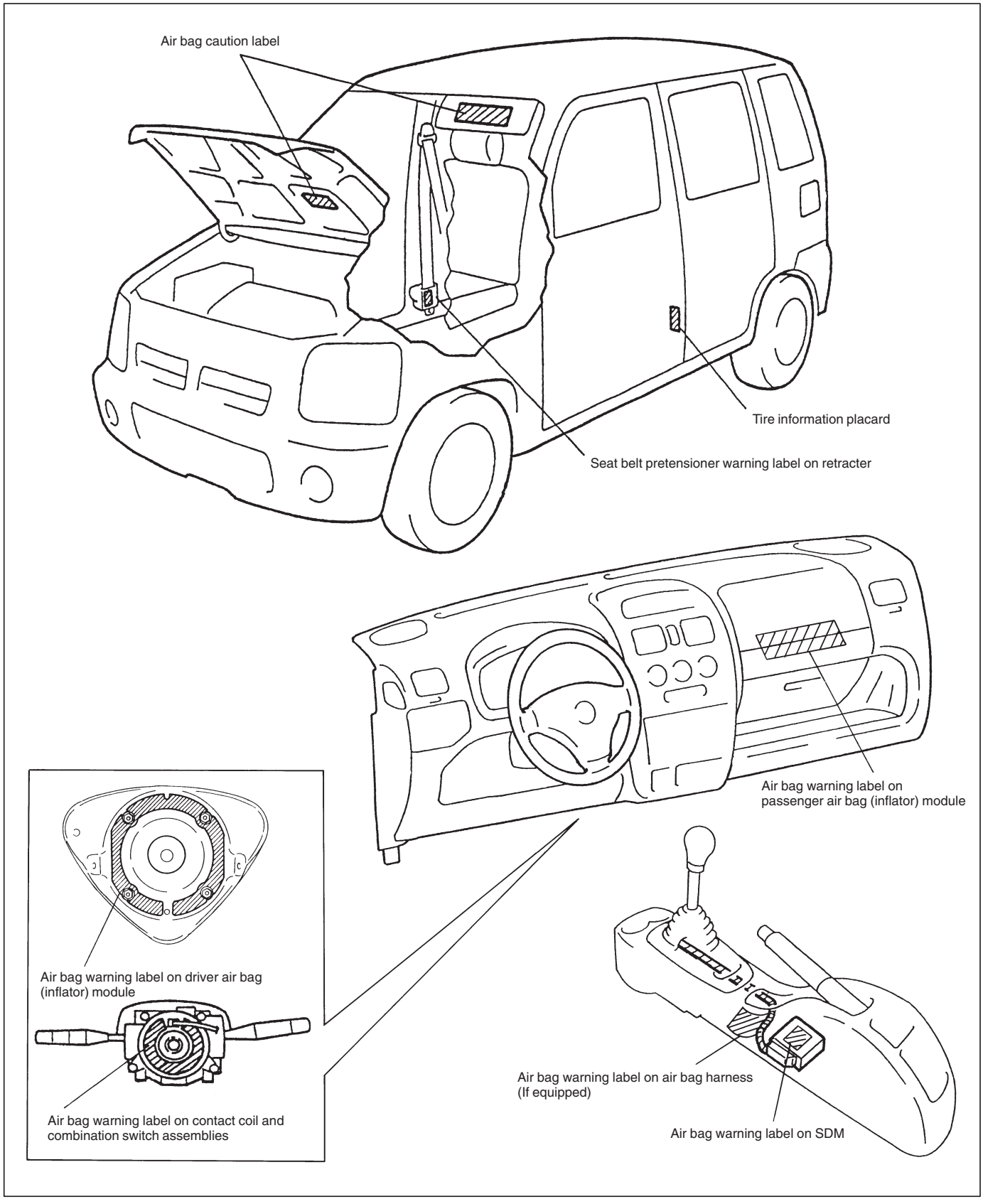

VEHICLE LIFTING POINTS

WARNING:

- **Before applying hoist to underbody, always take vehicle balance throughout service into consideration. Vehicle balance on hoist may change depending on what part to be removed.**
- **Before lifting up the vehicle, check to be sure that end of hoist arm is not in contact with brake pipe, fuel pipe, bracket or any other part.**
- **When using frame contact hoist, apply hoist as shown (right and left at the same position). Lift up the vehicle till 4 tires are a little off the ground and make sure that the vehicle will not fall off by trying to move vehicle body in both ways. Work can be started only after this confirmation.**
- **Make absolutely sure to lock hoist after vehicle is hoisted up.**

When using frame contact hoist:

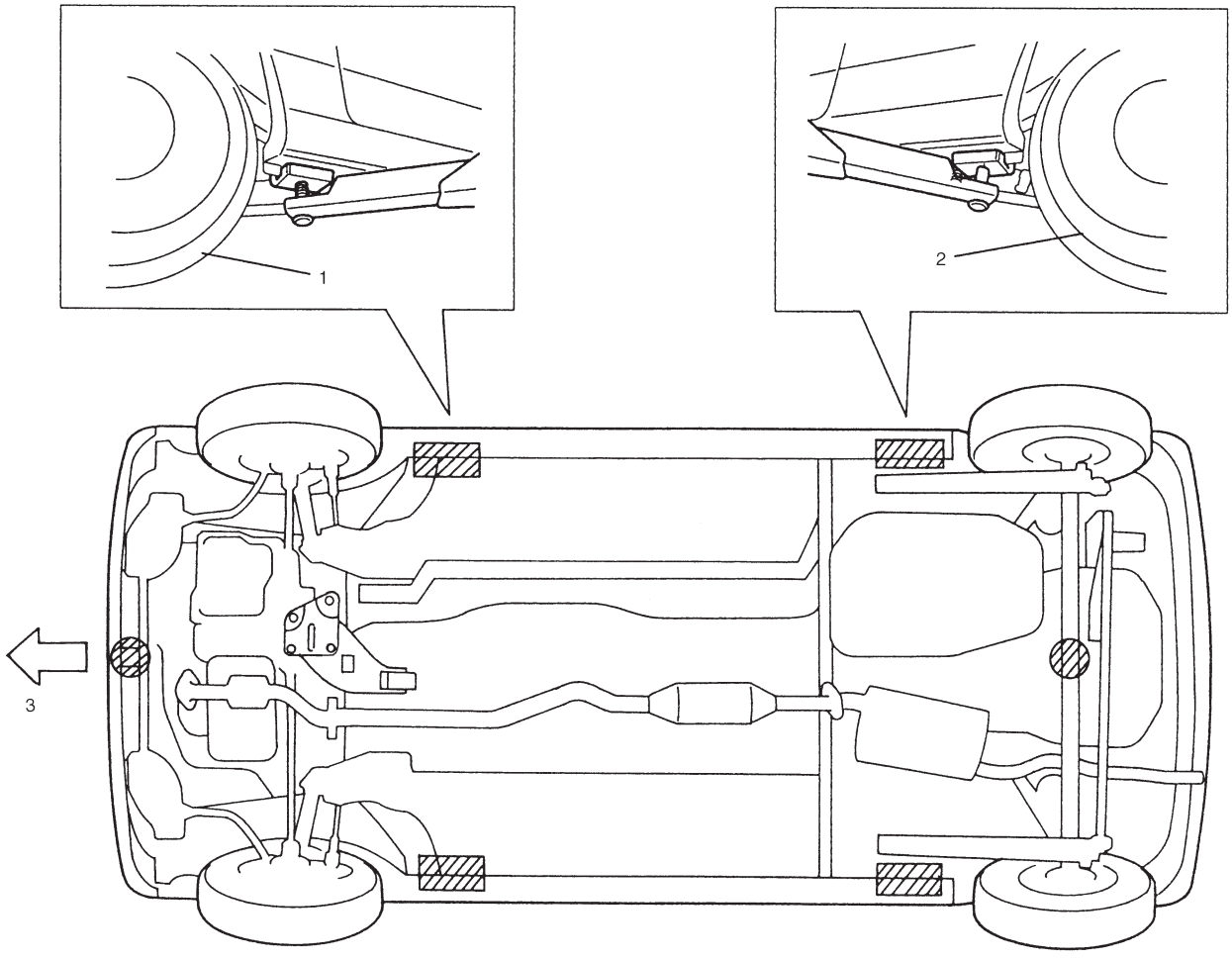

1. Front left tire
2. Rear left tire
3. Front

: Support position for frame contact hoist and safety stand.

: Floor jack position

When using floor jack:

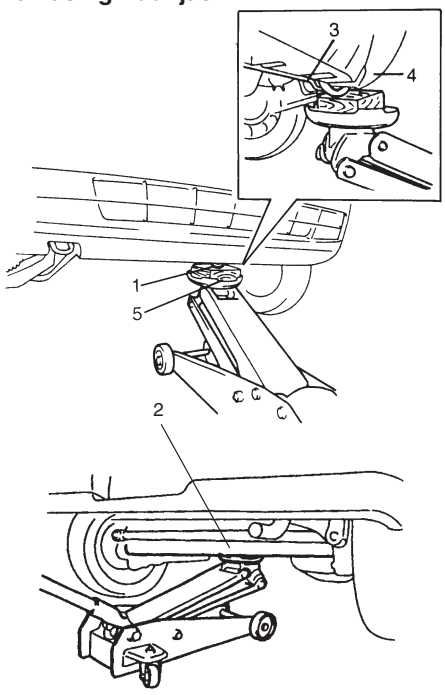

In raising front or rear vehicle end off the floor by jacking, be sure to put the wooden block (5) on the jack against front jacking bracket (1) or the center portion of rear axle (2).

CAUTION:
- **Never apply jack against suspension parts (i.e., stabilizer (3), etc.), front bumper (4) or vehicle floor, otherwise it may get deformed.**

WARNING:
- **If the vehicle to be jacked up only at the front or rear end, be sure to block the wheels on ground in order to ensure safety.**
  After the vehicle is jacked up, be sure to support it on stands. It is extremely dangerous to do any work on the vehicle raised on jack alone.

Front

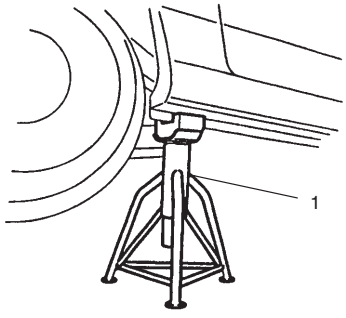

Rear

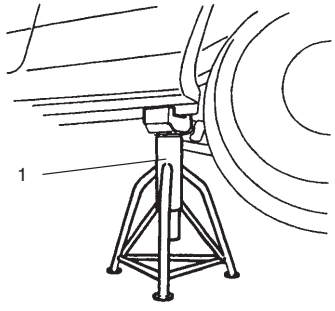

To perform service with either front or rear vehicle end jacked up, be sure to place safety stands (1) under body so that body is securely supported. And then check to ensure that body does not slide on safety stands and the vehicle is held stable for safety's sake.

ABBREVIATIONS AND SYMBOLS MAY BE USED IN THIS MANUAL

ABBREVIATIONS

A

ABS	:	Anti-lock Brake System
ATDC	:	After Top Dead Center
API	:	American Petroleum Institute
ATF	:	Automatic Transmission Fluid
ALR	:	Automatic Locking Retractor
AC	:	Alternating Current
A/T	:	Automatic Transmission
A/C	:	Air Conditioning
ABDC	:	After Bottom Dead Center
A/F	:	Air Fuel Mixture Ratio
A-ELR	:	Automatic-Emergency Locking Retractor

B

B+	:	Battery Positive Voltage
BTDC	:	Before Top Dead Center
BBDC	:	Before Bottom Dead Center

C

CKT	:	Circuit
CMP Sensor	:	Camshaft Position Sensor (Crank Angle Sensor, CAS)
CO	:	Carbon Monoxide
CPP Switch	:	Clutch Pedal Position Switch (Clutch Switch, Clutch Start Switch)
CPU	:	Central Processing Unit
CRS	:	Child Restraint System

D

DC	:	Direct Current
DLC	:	Data Link Connector (Assembly Line Diag. Link, ALDL, Serial Data Link, SDL)
DOHC	:	Double Over Head Camshaft
DOJ	:	Double Offset Joint
DRL	:	Daytime Running Light
DTC	:	Diagnostic Trouble Code (Diagnostic Code)

E

EBCM	:	Electronic Brake Control Module, ABS Control Module
ECM	:	Engine Control Module
ECT Sensor	:	Engine Coolant Temperature Sensor (Water Temp. Sensor, WTS)
EGR	:	Exhaust Gas Recirculation
EGRT Sensor	:	EGR Temperature Sensor (Recirculated Exhaust Gas Temp. Sensor, REGTS)
EFE Heater	:	Early Fuel Evaporation Heater (Positive Temperature Coefficient, PTC Heater)
ELR	:	Emergency Locking Retractor
EPS	:	Electrical Power Steering
EVAP	:	Evaporative Emission
EVAP Canister	:	Evaporative Emission Canister (Charcoal Canister)

F

4WD	:	4 Wheel Drive

G

GEN	:	Generator
GND	:	Ground

H

HC	:	Hydrocarbons
HO2S	:	Heated Oxygen Sensor

I

IAC Valve	:	Idle Air Control Valve (Idle Speed Control Solenoid Valve, ISC Solenoid Valve)
IAT Sensor	:	Intake Air Temperature Sensor (Air temperature Sensor, ATS)
ICM	:	Immobilizer Control Module
IG	:	Ignition
ISC Actuator	:	Idle Speed Control Actuator (Motor)
ISO	:	International Standards Organization

J

JIS	:	Japanese Industrial Standard

L

LH	:	Left Hand
LSPV	:	Load Sensing Proportioning Valve

M

MAF Sensor	:	Mass Air Flow Sensor (Air Flow Sensor, AFS, Air Flow Meter, AFM)
MAP Sensor	:	Manifold Absolute Pressure Sensor (Pressure Sensor, PS)
Max	:	Maximum
MFI	:	Multiport Fuel Injection (Multipoint Fuel Injection)
Min	:	Minimum
MIL	:	Malfunction Indicator Lamp
M/T	:	Manual Transmission

N

NOx	:	Nitrogen Oxides

O

OBD	:	On-Board Diagnostic System (Self-Diagnosis Function)
O/D	:	Overdrive
OHC	:	Over Head Camshaft

P

PNP	:	Park/Neutral Position
P/S	:	Power Steering
PSP Switch	:	Power Steering Pressure Switch (P/S Pressure Switch)
PCM	:	Powertrain Control Module
PCV	:	Positive Crankcase Ventilation

R

RH	:	Right Hand

S

SAE	:	Society of Automotive Engineers
SDM	:	Sensing and Diagnostic Module
SFI	:	Sequential Multiport Fuel Injection
SOHC	:	Single Over Head Camshaft

T

TBI	:	Throttle Body Fuel Injection (Single-Point Fuel Injection, SPI)
TCC	:	Torque Converter Clutch
TCM	:	Transmission Control Module (A/T Controller, A/T Control Module)
TP Sensor	:	Throttle Position Sensor
TVV	:	Thermal Vacuum Valve (Thermal Vacuum Switching Valve, TVSV, Bimetal Vacuum Switching Valve, BVSV)
TWC	:	Three Way Catalytic Converter (Three Way Catalyst)
2WD	:	2 Wheel Drive

V

VIN	:	Vehicle Identification Number
VSS	:	Vehicle Speed Sensor

W

WU-OC	:	Warm Up Oxidation Catalytic Converter
WU-TWC	:	Warm Up Three Way Catalytic Converter

SYMBOLS

SYMBOL	DEFINITION	SYMBOL	DEFINITION
	Tightening torque	1216	Apply SUZUKI BOND NO. 1216 99000-31160
OIL	Apply oil (Engine, transmission, transfer, differential)	Si	Apply SILICONE SEALANT 99000-31120
FLD	Apply fluid (Brake, power steering or automatic transmission fluid)	366E	Apply SEALING COMPOUND 366E 99000-31090
A	Apply SUZUKI SUPER GREASE A 99000-25010		
C	Apply SUZUKI SUPER GREASE C 99000-25030	1322	Apply THREAD LOCK 1322 99000-32110
E	Apply SUZUKI SUPER GREASE E 99000-25050	1333B	Apply THREAD LOCK 1333B 99000-32020
H	Apply SUZUKI SUPER GREASE H 99000-25120	1342	Apply THREAD LOCK 1342 99000-32050
I	Apply SUZUKI SUPER GREASE I 99000-25210		
1215	Apply SUZUKI BOND NO. 1215 99000-31110		Do not reuse
1207C	Apply SUZUKI BOND NO. 1207C 99000-31150		Note on reassembly

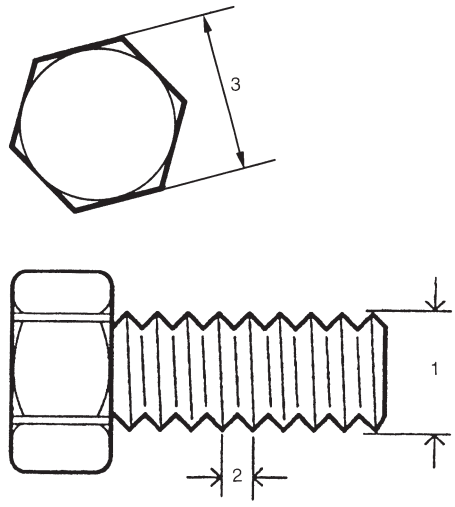

METRIC INFORMATION

METRIC FASTENERS

Most of the fasteners used for this vehicle are JIS-defined and ISO-defined metric fasteners. When replacing any fasteners, it is most important that replacement fasteners be the correct diameter, thread pitch and strength.

CAUTION:
Even when the nominal diameter (1) of thread is the same, the thread pitch (2) or the width across flats (3) may vary between ISO and JIS. Refer to JIS-TO-ISO Main Fasteners Comparison Table below for the difference.
Installing a mismatched bolt or nut will cause damage to the thread.
Before installing, check the thread pitch for correct matching and then tighten it by hand temporarily. If it is tight, recheck the thread pitch.

JIS-TO-ISO Main Fasteners Comparison Table

Standard \ Nominal diameter		M6	M8	M10	M12	M14
JIS	Thread pitch	1.0	1.25	1.25	1.25	1.5
	Width across flats	10	12	14	17	19
ISO	Thread pitch	1.0	1.25	1.5	1.5	1.5
	Width across flats	10	13	16	18	21

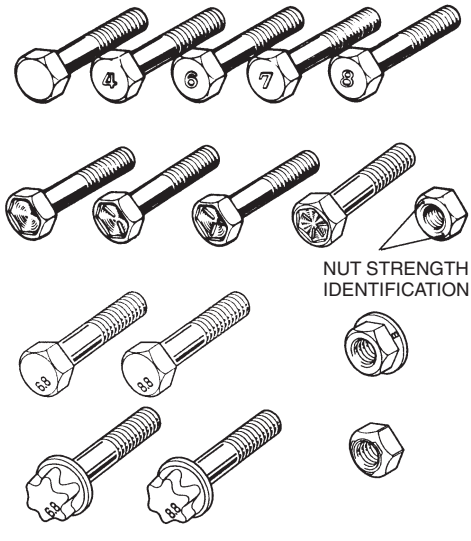

METRIC BOLTS-IDENTIFICATION CLASS NUMBERS OR MARKS CORRESPOND TO BOLT STRENGTH-INCREASING NUMBERS REPRESENT INCREASING STRENGTH.

FASTENER STRENGTH IDENTIFICATION

Most commonly used metric fastener strength property classes are 4T, 6.8, 7T, 8.8 and radial line with the class identification embossed on the head of each bolt. Some metric nuts will be marked with punch, 6 or 8 mark strength identification on the nut face. Figure shows the different strength markings.
When replacing metric fasteners, be careful to use bolts and nuts of the same strength or greater than the original fasteners (the same number marking or higher). It is likewise important to select replacement fasteners of the correct diameter and thread pitch. Correct replacement bolts and nuts are available through the parts division.

STANDARD TIGHTENING TORQUE

Each fastener should be tightened to the torque specified in each section of this manual. If no description or specification is provided, refer to the following tightening torque chart for the applicable torque for each fastener. When a fastener of greater strength than the original one is used, however, use the torque specified for the original fastener.

NOTE:

- **For the flanged bolt, flanged nut and self-lock nut of 4T and 7T strength, add 10% to the tightening torque given in the chart below.**
- **The chart below is applicable only where the fastened parts are made of steel or light alloy.**

Tightening torque chart

Strength \ Thread Diameter (Nominal Diameter) (mm)		4	5	6	8	10	12	14	16	18
A equivalent of 4T strength fastener 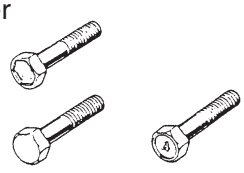	N·m	1.5	3.0	5.5	13	29	45	65	105	160
	kg-m	0.15	0.30	0.55	1.3	2.9	4.5	6.5	10.5	16
	lb-ft	1.0	2.5	4.0	9.5	21.0	32.5	47.0	76.0	116.0
A equivalent of 6.8 strength fastener without flange 	N·m	2.4	4.7	8.4	20	42	80	125	193	280
	kg-m	0.24	0.47	0.84	2.0	4.2	8.0	12.5	19.3	28
	lb-ft	2.0	3.5	6.0	14.5	30.5	58.0	90.5	139.5	202.5
A equivalent of 6.8 strength fastener with flange 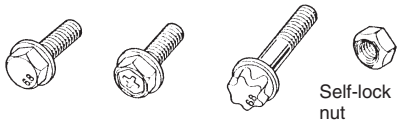 Self-lock nut	N·m	2.4	4.9	8.8	21	44	84	133	203	298
	kg-m	0.24	0.49	0.88	2.1	4.4	8.4	13.3	20.3	29.8
	lb-ft	2.0	3.5	6.5	15.5	32.0	61.0	96.5	147.0	215.5
A equivalent of 7T strength fastener 	N·m	2.3	4.5	10	23	50	85	135	210	240
	kg-m	0.23	0.45	1.0	2.3	5.0	8.5	13.5	21	24
	lb-ft	2.0	3.5	7.5	17.0	36.5	61.5	98.0	152.0	174.0
A equivalent of 8.8 strength fastener without flange 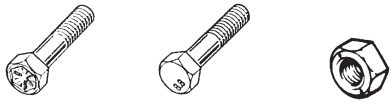	N·m	3.1	6.3	11	27	56	105	168	258	373
	kg-m	0.31	0.63	1.1	2.7	5.6	10.5	16.8	25.8	37.3
	lb-ft	2.5	4.5	8.0	19.5	40.5	76.0	121.5	187.0	270.0
A equivalent of 8.8 strength fastener with flange 	N·m	3.2	6.5	12	29	59	113	175	270	395
	kg-m	0.32	0.65	1.2	2.9	5.9	11.3	17.5	27	39.5
	lb-ft	2.5	5.0	9.0	21.0	43.0	82.0	126.5	195.5	286.0

SECTION 0B

MAINTENANCE AND LUBRICATION

WARNING:
For vehicles equipped with Supplemental Restraint (Air Bag) System:

- **Service on and around the air bag system components or wiring must be performed only by an authorized SUZUKI dealer. Refer to "Air Bag System Components and Wiring Location View" under "General Description" in air bag system section in order to confirm whether you are performing service on or near the air bag system components or wiring. Please observe all WARNINGS and "Service Precautions" under "On-Vehicle Service" in air bag system section before performing service on or around the air bag system components or wiring. Failure to follow WARNINGS could result in unintentional activation of the system or could render the system inoperative. Either of these two conditions may result in severe injury.**
- **Technical service work must be started at least 90 seconds after the ignition switch is turned to the "LOCK" position and the negative cable is disconnected from the battery. Otherwise, the system may be activated by reserve energy in the Sensing and Diagnostic Module (SDM).**

CONTENTS

MAINTENANCE SCHEDULE

NORMAL CONDITION SCHEDULE

Interval: This interval should be judged by odometer reading or months, whichever comes first.	This table includes services as scheduled up to 90,000 km (54,000 miles) mileage. Beyond 90,000 km (54,000 miles), carry out the same services at the same intervals respectively.						
	km (x 1,000)	15	30	45	60	75	90
	Miles (x 1,000)	9	18	27	36	45	54
	Months	12	24	36	48	60	72
1. ENGINE							
1-1. Drive belt (tension, damage)	V-rib belt	—	—	I	—	—	R
1-2. Camshaft timing belt		Replace every 100,000 km (60,000 miles)					
1-3. Valve lash (clearance)		—	I	—	I	—	I
1-4. Engine oil and Engine oil filter	When SG, SH or SJ grade oil is used.	R	R	R	R	R	R
	When SE or SF grade oil is used.	Replace every 10,000 km (6,000 miles) or 8 months					
1-5. Engine coolant		—	R	—	R	—	R
1-6. Exhaust system (leakage, damage, tightness)		—	I	—	I	—	I
2. IGNITION SYSTEM							
2-1. Spark plugs	When unleaded fuel is used	—	—	R	—	—	R
3. FUEL SYSTEM							
3-1. Air cleaner filter	Paved-road	I	I	R	I	I	R
	Dusty condition	Refer to “Severe Driving Condition” schedule					
3-2. Fuel lines (deterioration, leakage, damage)		—	I	—	I	—	I
3-3. Fuel tank		—	—	I	—	—	I
4. EMISSION CONTROL SYSTEM							
4-1. PCV (Positive Crankcase Ventilation) valve		—	—	—	—	—	I
4-2. Fuel evaporative emission control system		—	—	—	—	—	I
5. BRAKE							
5-1. Brake discs and pads (thickness, wear, damage)		I	I	I	I	I	I
Brake drums and shoes (wear, damage)		—	I	—	I	—	I
5-2. Brake hoses and pipes (leakage, damage, clamp)		—	I	—	I	—	I
5-3. Brake fluid		—	R	—	R	—	R
5-4. Brake lever and cable (damage, stroke, operation)		Inspect at first 15,000 km (9,000 miles) only					

Interval: This interval should be judged by odometer reading or months, whichever comes first.	This table includes services as scheduled up to 90,000 km (54,000 miles) mileage. Beyond 90,000 km (54,000 miles), carry out the same services at the same intervals respectively.						
	km (x 1,000)	15	30	45	60	75	90
	Miles (x 1,000)	9	18	27	36	45	54
	Months	12	24	36	48	60	72
6. CHASSIS AND BODY							
6-1. Clutch pedal (For manual transmission)		—	I	—	I	—	I
6-2. Tires/wheel discs (wear, damage, rotation)		I	I	I	I	I	I
6-3. Drive shaft boots (breakage, damage)		—	—	I	—	—	I
6-4. Suspension system (tightness, damage, rattle, breakage)		—	I	—	I	—	I
6-5. Steering system (tightness, damage, breakage, rattle)		—	I	—	I	—	I
6-6. Manual transmission oil (leakage, level) (“I”: 1st 15,000 km only)		I	—	R	—	—	R
6-7. Automatic transmission	Fluid level	—	I	—	I	—	I
	Fluid change	Replace every 160,000 km (100,000 miles)					
6-8. All latches, hinges and locks		—	I	—	I	—	I
6-9. Ventilator air filter (if equipped)		—	I	R	—	I	R

NOTES:

- ***“R”: Replace or change***
- ***“I”: Inspect and correct or replace if necessary***
- ***For Sweden, item 2-1, 4-1 and 4-2 should be performed by odometer reading only.***

MAINTENANCE RECOMMENDED UNDER SEVERE DRIVING CONDITIONS

If the vehicle is usually used under the conditions corresponding to any severe condition code given below, it is recommended that applicable maintenance operation be performed at the particular interval as given in the chart below.

Severe condition code

A – Repeated short trips
B – Driving on rough and/or muddy roads
C – Driving on dusty roads
D – Driving in extremely cold weather and/or salted roads
E – Repeated short trips in extremely cold weather
H – Trailer towing (if admitted)

Severe Condition Code	Maintenance	Maintenance Operation	Maintenance Interval
– B C D – – – –	Drive belt (V-rib belt)	I	Every 15,000 km (9,000 miles) or 12 months
		R	Every 45,000 km (27,000 miles) or 36 months
A – C D E – – H	Engine oil and oil filter	R	Every 5,000 km (3,000 miles) or 4 months
A B C – E – – H	Spark plugs	R	Every 10,000 km (6,000 miles) or 8 months
– – C – – – – –	Air cleaner filter *1	I	Every 2,500 km (1,500 miles)
		R	Every 30,000 km (18,000 miles) or 24 months
– B – – E – – H	Manual transmission oil	R	Every 30,000 km (18,000 miles) or 24 months
– B – – E – – H	Automatic transmission fluid	R	Every 30,000 km (18,000 miles) or 24 months
– B C D – – – H	Wheel bearings	I	Every 15,000 km (9,000 miles) or 12 months
– – C D – – – –	Ventilator air filter *2 (if equipped)	I	Every 15,000 km (9,000 miles) or 12 months
		R	Every 45,000 km (27,000 miles) or 36 months

NOTES:

- ***"R": Replace or change***
- ***"I": Inspect and correct or replace if necessary***
- ****1: Inspect or replace more frequently if necessary.***
- ****2: Clean or replace more frequently if the air from the ventilator decreases.***

MAINTENANCE SERVICE
ENGINE
ITEM 1-1
Drive Belt Inspection and Replacement

WARNING:
Disconnect negative cable at battery before checking and adjusting belt tension.

Water pump belt inspection

1) Remove engine under cover of right side from vehicle body.
2) Inspect belt for cracks, cuts, deformation, wear and cleanliness. Replace, if necessary.
3) Check pump belt for tension and adjust it as necessary.

Water pump belt tension "a":
8 – 10 mm (0.32 – 0.39 in.) deflection under 100 N, 10 kg or 22 lb pressure

NOTE:
When replacing belt with a new one, adjust belt tension to 6 – 7 mm (0.24 – 0.27 in.).

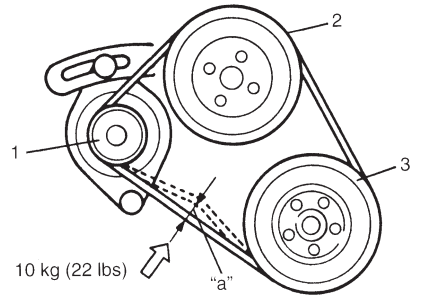

1. Generator pulley
2. Water pump pulley
3. Crankshaft pulley

A/C compressor drive belt inspection (If equipped)

1) Hoist vehicle and remove engine under cover of right side from vehicle body.
2) Inspect belt for wear, deterioration and tension. Replace or adjust, if necessary.

A/C compressor drive belt tension "a":
7 – 9 mm (0.28 – 0.35 in.) deflection under 100 N, 10 kg or 22 lb pressure

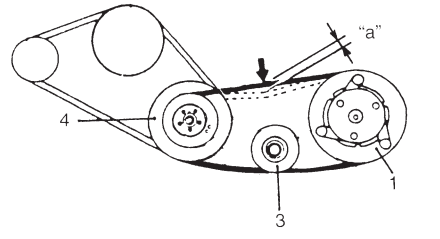

1. A/C compressor pulley
2. Blank
3. Tension pulley
4. Crankshaft pulley

A/C compressor drive belt replacement

1) Disconnect negative cable from battery.
2) Remove engine under cover of right side.
3) Loosen belt tension and replace belt with new one.
4) Adjust belt tension to specification.
5) Install engine under cover and connect negative cable to battery.

Water pump belt replacement

Replace belt with new one. Refer to SECTION 6B for replacement procedure of pump belt.

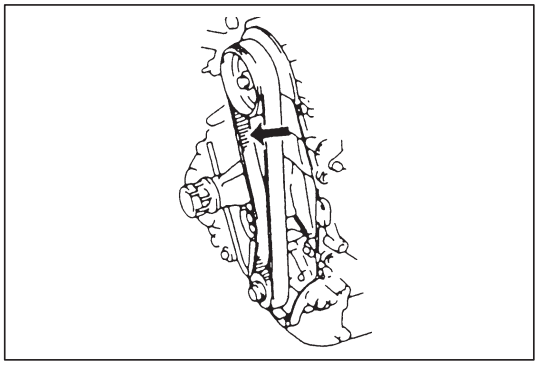

ITEM 1-2
Camshaft Timing Belt Replacement

Replace belt with new one. Refer to SECTION 6A1 for replacement procedure.

CAUTION:
- **Do not bend or twist timing belt.**
- **Do not allow timing belt to come into contact with oil, water, etc.**

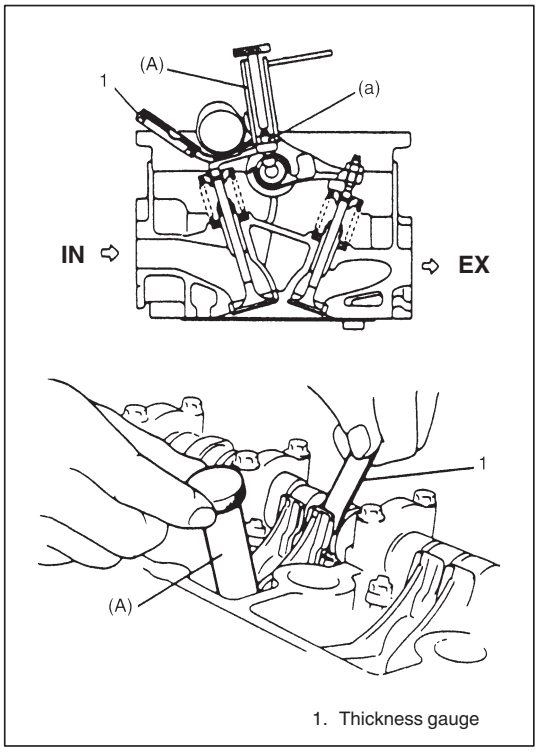

1. Thickness gauge

ITEM 1-3
Valve Lash Inspection

1) Remove cylinder head cover.
2) Inspect intake and exhaust valve lash and adjust as necessary. Refer to SECTION 6A1 for valve lash inspection and adjustment procedure.

		When cold (Coolant temperature is 15 – 25°C or 59 – 77°F)	When hot (Coolant temperature is 60 – 68°C or 140 – 154°F)
Valve lash specification	Intake	0.13 – 0.17 mm (0.005 – 0.007 in)	0.17 – 0.21 mm (0.007 – 0.008 in)
	Exhaust	0.23 – 0.27 mm (0.009 – 0.011 in)	0.27 – 0.31 mm (0.011 – 0.012 in)

Special Tool
(A): 09917-18210

Tightening Torque
(a): 12 N·m (1.2 kg-m, 8.5 lb-ft)

3) Install cylinder head cover and tighten bolts to specification.

Proper Engine Oil Viscosity Chart

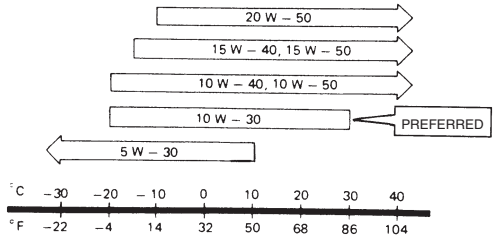

ITEM 1-4
Engine Oil and Filter Change

WARNING:
New and used engine oil can be hazardous.
Be sure to read "WARNING" in General Precaution in SECTION 0A and observe what in written there.

Use engine oil of SE, SF, SG, SH or SJ grade.
Select the appropriate oil viscosity according to the left chart.
For ambient temperature between –20°C (–4°F) and 30°C (86°F), it is highly recommended to use SAE 10 W – 30 oil.

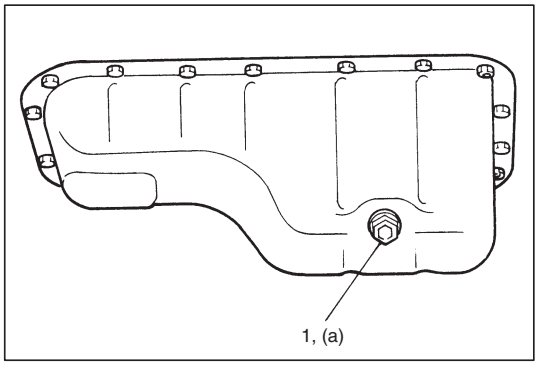

1, (a)

Before draining engine oil, check engine for oil leakage. If any evidence of leakage is found, make sure to correct defective part before proceeding to following work.

1) Drain engine oil by removing drain plug (1).
2) After draining oil, wipe drain plug clean. Reinstall drain plug, and tighten it securely as specified below.

Tightening Torque
(a): 50 N·m (5.0 kg-m, 36.5 lb-ft)

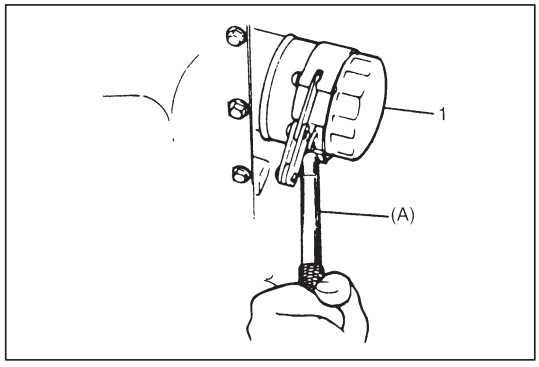

3) Loosen oil filter (1) by using oil filter wrench (Special tool).

Special Tool
(A): 09915-47330

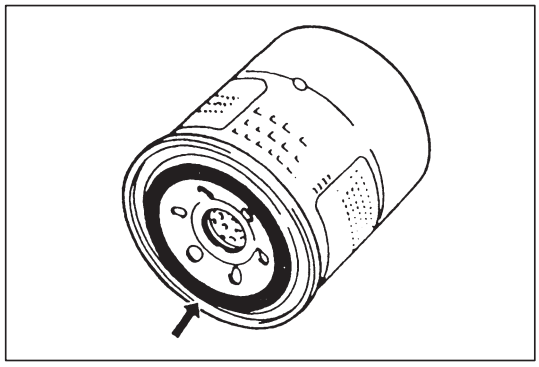

4) Apply engine oil to new oil filter "O" ring.
5) Screw new filter on oil filter stand by hand until filter "O" ring contacts mounting surface.

CAUTION:
To tighten oil filter properly, it is important to accurately identify the position at which filter "O" ring first contacts mounting surface.

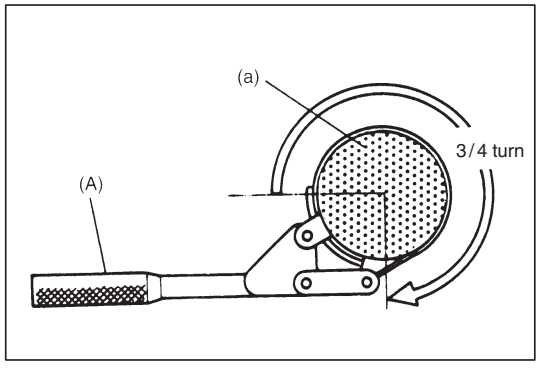

6) Tighten filter 3/4 turn from the point of contact with mounting surface using an oil filter wrench.

Special Tool
(A): 09915-47330

Tightening Torque
(a): 14 N·m (1.4 kg-m, 10.5 lb-ft)

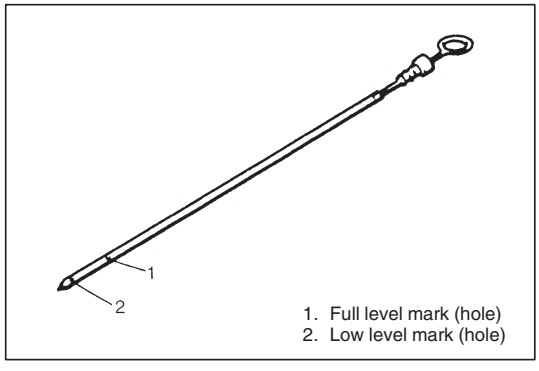

7) Replenish oil until oil level is brought to FULL level mark (1) on dipstick (Oil pan and oil filter capacity). Filler inlet is at the top of cylinder head cover.
8) Start engine and run it for three minutes. Stop it and wait another 5 minutes before checking oil level. Add oil, as necessary, to bring oil level to FULL level mark on dipstick.

Engine oil capacity

Oil pan capacity	about 3.1 liters (6.5/5.5 US/Imp pt.)
Oil filter capacity	about 0.2 liters (0.4/0.3 US/Imp pt.)
Others	about 0.3 liters (0.6/0.5 US/Imp pt.)
Total	about 3.6 liters (7.5/6.3 US/Imp pt.)

NOTE:
Engine oil capacity is specified as left table.
However, note that amount of oil required when actually changing oil may somewhat differ from data in left table depending on various conditions (temperature, viscosity, etc.).

9) Check oil filter and drain plug for oil leakage.

ITEM 1-5
Engine Coolant Change

WARNING:
To help avoid danger of being burned, do not remove radiator cap while engine and radiator are still hot. Scalding fluid and steam can be blown out under pressure if cap is taken off too soon.

CAUTION:
When changing engine coolant, use mixture of 50% water and 50% ethylene-glycol base coolant (Anti-Freeze/Anti-corrosion coolant) for the market where ambient temperature falls lower than –16°C (3°F) in winter and mixture of 70% water and 30% ethylene-glycol base coolant for the market where ambient temperature doesn't fall lower than –16°C (3°F).
Even in a market where no freezing temperature is anticipated, mixture of 70% water and 30% ethylene glycol base coolant should be used for the purpose of corrosion protection and lubrication.

Refer to SECTION 6B of this manual for COOLANT CAPACITY.

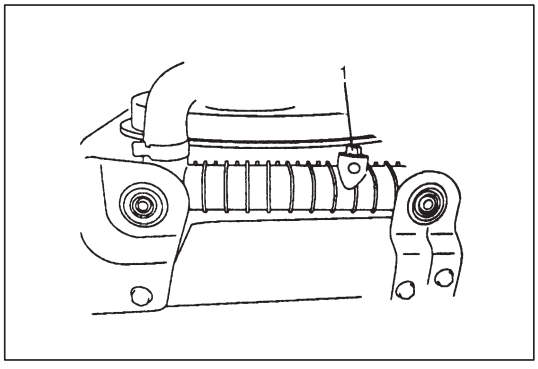

1) Remove radiator cap when engine is cool.
2) Loosen radiator drain plug (1) to drain coolant.
3) Remove reservoir and drain.
4) Tighten drain plug securely. Also install reservoir.
5) Slowly pour specified amount of coolant to the base of radiator filler neck, and run engine, with radiator cap removed, until radiator upper hose is hot. This drives out any air which may still be trapped within cooling system. Add coolant as necessary until coolant level reaches filler throat of radiator. Reinstall radiator cap.

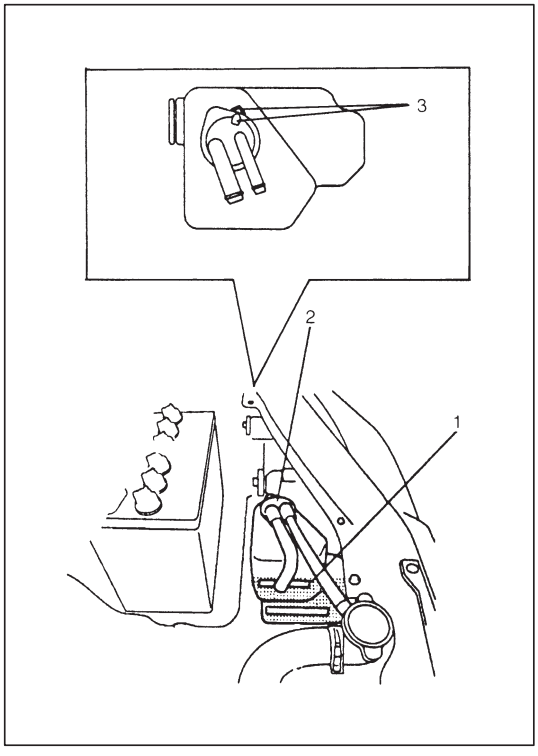

6) Add coolant to reservoir so that its level aligns with FULL level line (1). Then, reinstall cap (2) to reservoir aligning match marks (3) on the reservoir and cap.

ITEM 1-6
Exhaust System Inspection

WARNING:
To avoid danger of being burned, do not touch exhaust system when it is still hot.
Any service on exhaust system should be performed when it is cool.

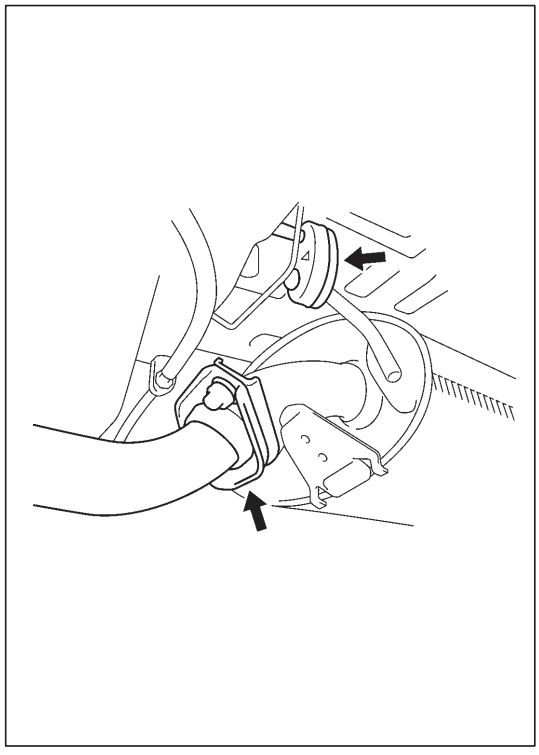

When carrying out periodic maintenance or vehicle is raised for other service, check exhaust system as follows:

- Check rubber mountings for damage and deterioration.
- Check exhaust system for leakage, loose connections, dents, and damages.
  If bolts or nuts are loose, tighten them to specification.
  Refer to SECTION 6K for torque specification of bolts and nuts.
- Check nearby body areas for damaged, missing or mispositioned parts, open seams, holes, loose connections or other defects which could permit exhaust fumes to seep into vehicle.
- Make sure that exhaust system components have enough clearance from underbody to avoid overheating and possible damage to floor carpet.
- Any defects should be fixed at once.

IGNITION SYSTEM

ITEM 2-1

Spark Plugs Replacement

Replace spark plugs with new ones referring to Section 6F1.

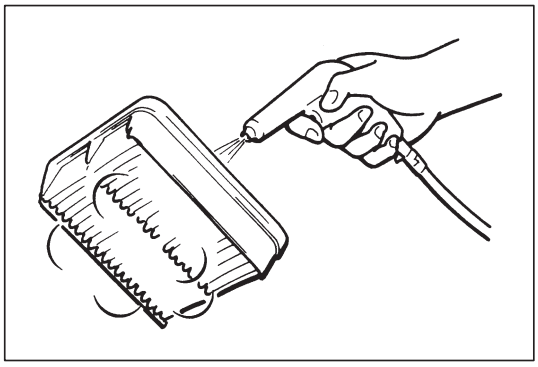

FUEL SYSTEM

ITEM 3-1

Air Cleaner Filter Inspection

1) Unclamp air cleaner case clamps.
2) Take cleaner filter out of air cleaner case.
3) Visually check that air cleaner filter is not excessively dirty, damaged or oily.
4) Clean filter with compressed air from air outlet side of filter.
5) Install air cleaner filter into case referring to Section 6A1.
6) Clamp case securely.

Air Cleaner Filter Replacement

Replace air cleaner filter with new one according to procedure described in Section 6A1.

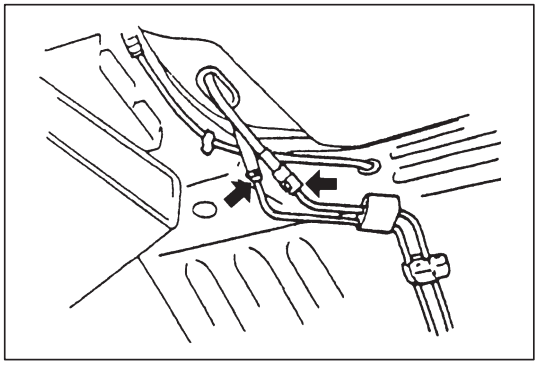

ITEM 3-2

Fuel Lines Inspection

Check fuel lines for loose connection, deterioration or damage which could cause leakage. Make sure all clamps are secure.
Replace any damaged or deteriorated parts.
There should be no sign of fuel leakage or moisture at any fuel connection.

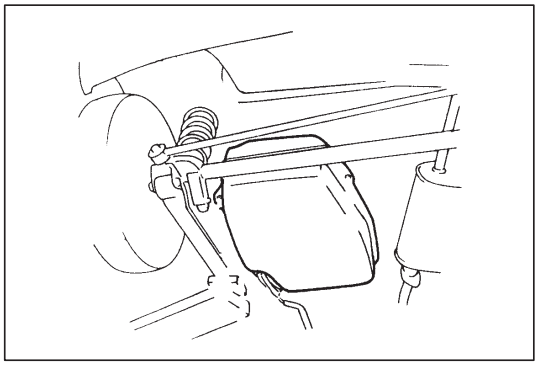

ITEM 3-3

Fuel Tank Inspection

Check fuel tank for damage, cracks, fuel leakage, corrosion and tank bolts looseness.
If a problem is found, repair or replace.

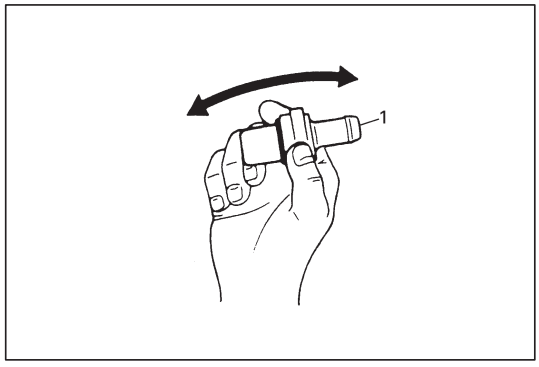

EMISSION CONTROL SYSTEM

ITEM 4-1

PCV (Positive Crankcase Ventilation) Valve Inspection

Check crankcase ventilation hoses and PCV hoses for leaks, cracks or clog, and PCV valve (1) for stick or clog. Refer to Section 6E for PCV valve checking procedure.

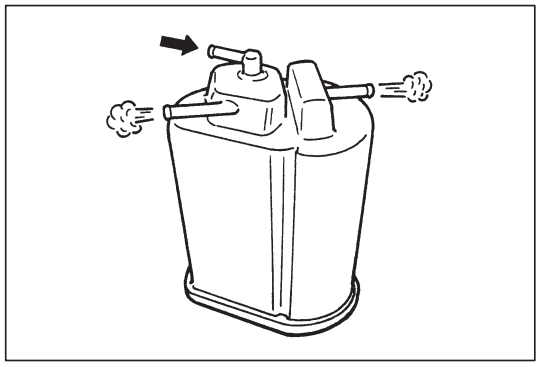

ITEM 4-2

Fuel Evaporative Emission Control System Inspection

WARNING:
DO NOT SUCK nozzles on EVAP canister. Fuel vapor inside EVAP canister is harmful.

Check EVAP (Evaporative Emission) canister for damage, clog and operation referring to SECTION 6E1.
If a problem is found, replace.

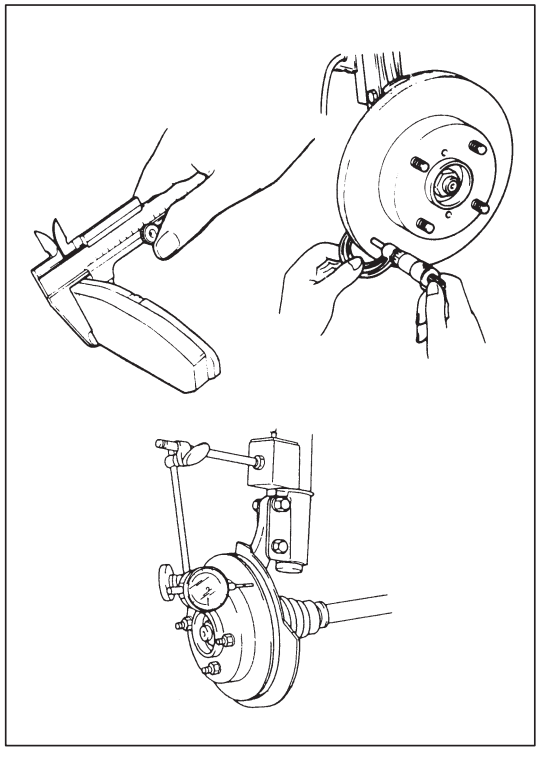

BRAKE

ITEM 5-1

Brake Discs, Pads, Drums and Shoes Inspection

Brake discs and pads

1) Remove wheel and caliper but don't disconnect brake hose from caliper.
2) Check front disc brake pads and discs for excessive wear, damage and deflection. Replace parts as necessary. For the details, refer to SECTION 5B.
3) Install caliper and wheel.

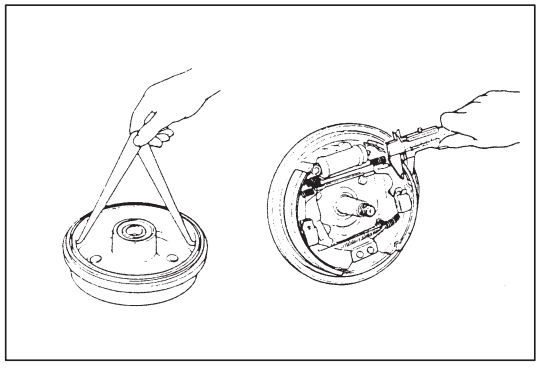

Brake drums and shoes

1) Remove wheel and brake drum.
2) Check rear brake drums and brake linings for excessive wear and damage, while wheels and drums are removed.
   At the same time, check wheel cylinders for leakage.
   Replace as necessary.
   For the details, refer to SECTION 5C.
3) Install brake drum and wheel.

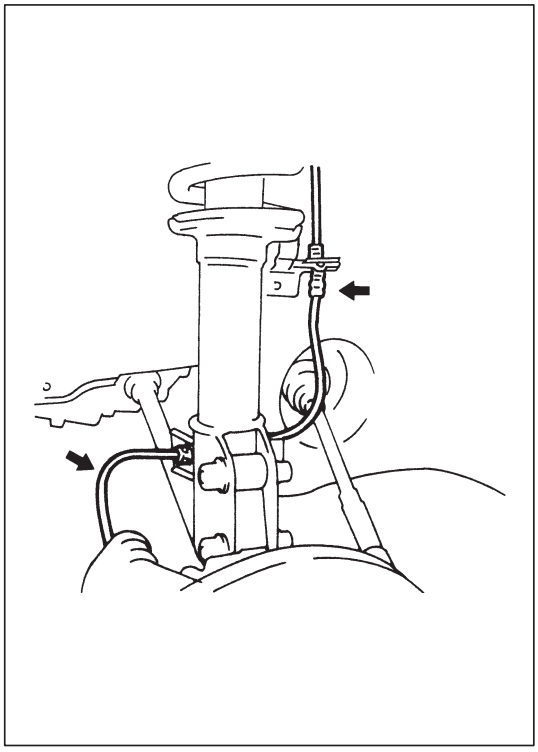

ITEM 5-2

Brake Hoses and Pipes Inspection

Perform this inspection where there is enough light and use a mirror as necessary.

- Check brake hoses and pipes for proper hook-up, leaks, cracks, chafing, wear, corrosion, bends, twists and other damage. Replace any of these parts as necessary.
- Check all clamps for tightness and connections for leakage.
- Check that hoses and pipes are clear of sharp edges and insecure parts.

CAUTION:
After replacing any brake pipe or hose, be sure to carry out air purge operation.

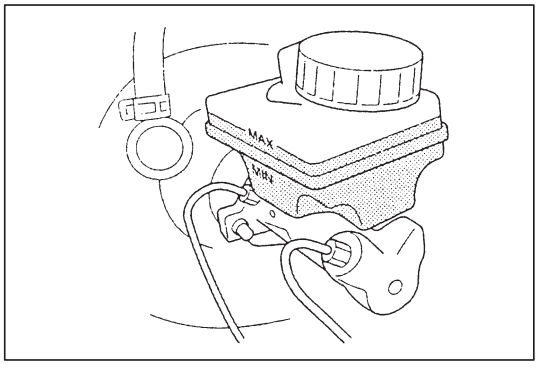

ITEM 5-3

Brake Fluid Change

CAUTION:
Do not use old or used brake fluid, or any fluid from any unsealed container.

Change brake fluid as follows.
Drain existing fluid from brake system completely, fill system with above recommended fluid and carry out air purge operation.
For air purging procedure, refer to SECTION 5.

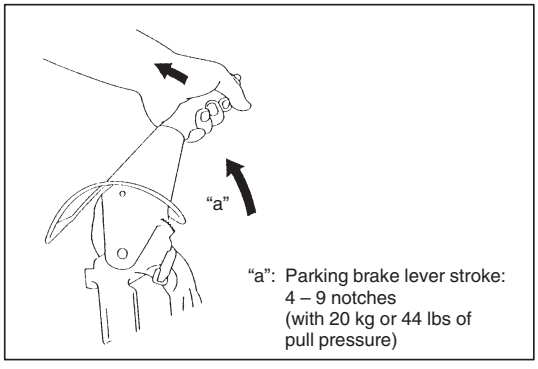

ITEM 5-4

Brake Lever and Cable Inspection

Parking brake lever

- Check tooth tip of each notch for damage or wear. If any damage or wear is found, replace parking lever.
- Check parking brake lever for proper operation and stroke, and adjust it if necessary.
  For checking and adjusting procedures, refer to PARKING BRAKE INSPECTION AND ADJUSTMENT in SECTION 5C.

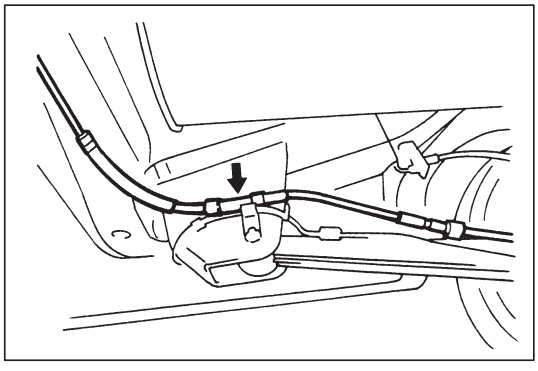

Parking brake cable

Inspect brake cable for damage and smooth movement.
Replace cable if it is in deteriorated condition.

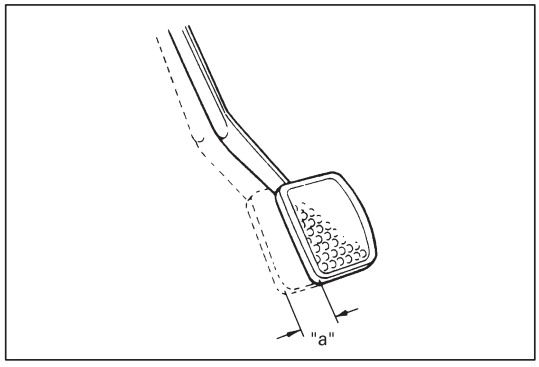

CHASSIS AND BODY

ITEM 6-1

Clutch Pedal Free Travel Inspection (Cable type only)

Check clutch pedal free travel “a”. Refer to SECTION 7C for procedure to check and adjust it.

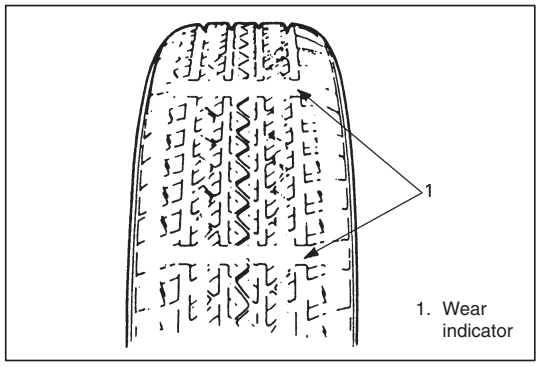

ITEM 6-2

Tire/Wheel Disc Inspection

[Tire inspection]

1) Check tire for uneven or excessive wear, or damage. If defective, replace.

2) Check inflating pressure of each tire and adjust pressure to specification as necessary.

NOTE:

- **Tire inflation pressure should be checked when tires are cool.**
- **Specified tire inflation pressure should be found on tire placard or in owner’s manual which came with vehicle.**

[Wheel disc inspection]

Inspect each wheel disc for dents, distortion and cracks. A disc in badly damaged condition must be replaced.

[Tire rotation]

Rotate tires.

For details of the steps, refer to SECTION 3F.

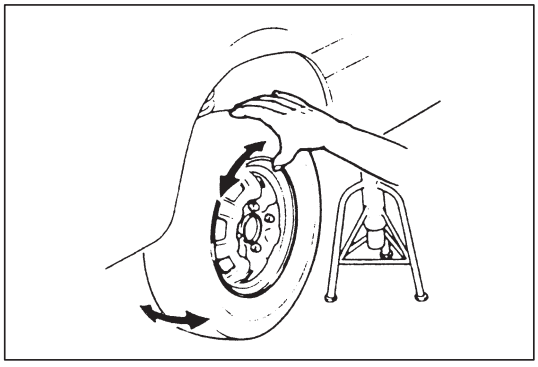

Wheel Bearing Inspection

1) Check front wheel bearing for wear, damage, abnormal noise or rattles. For details, refer to FRONT SUSPENSION INSPECTION of SECTION 3D.
2) Check rear wheel bearing for wear, damage abnormal noise or rattle. For details, refer to REAR SUSPENSION INSPECTION of SECTION 3E.

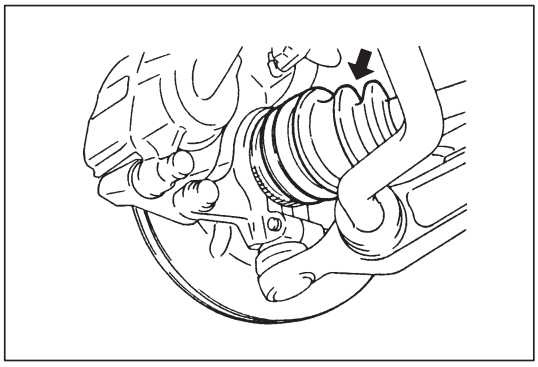

ITEM 6-3

Drive Shaft (Axle) Boot Inspection

Check drive shaft boots (wheel side and differential side) for leakage, detachment, tear or any other damage.
Replace boot as necessary.

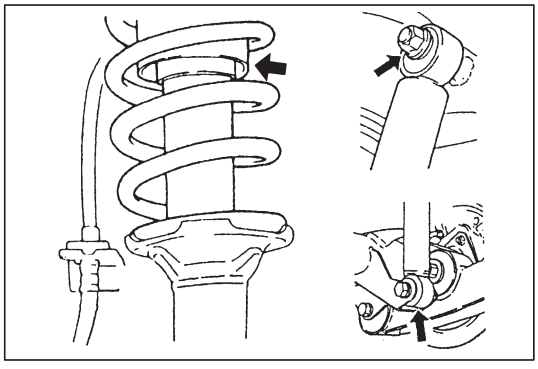

ITEM 6-4

Suspension System Inspection

- Inspect front struts & rear shock absorbers for evidence of oil leakage, dents or any other damage on sleeves; and inspect anchor ends for deterioration.
  Replace defective parts, if any.
- Check front and rear suspension systems for damaged, loose or missing parts; also for parts showing signs of wear or lack of lubrication.
  Repair or replace defective parts, if any.

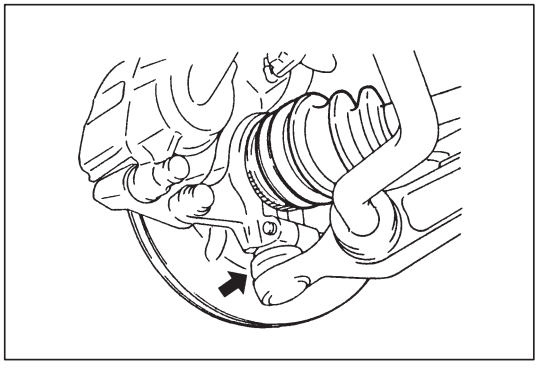

- Check front suspension arm ball joint stud dust seals for leakage, detachment, tear or any other damage.
  Replace defective boot, if any.

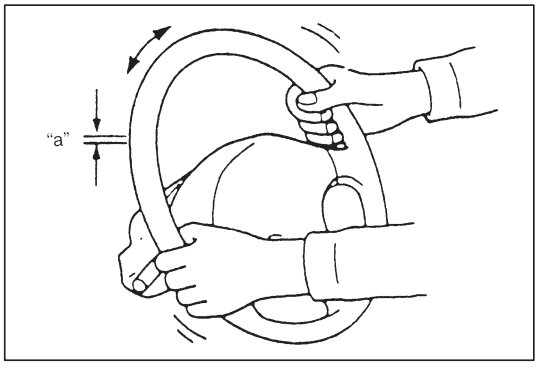

ITEM 6-5

Steering System Inspection

1) Check steering wheel for play and rattle, holding vehicle straight on ground.

   Steering wheel play "a": 0 – 30 mm (0 – 1.1 in.)

2) Check bolts and nuts for tightness and retighten them as necessary. Repair or replace defective parts, if any.

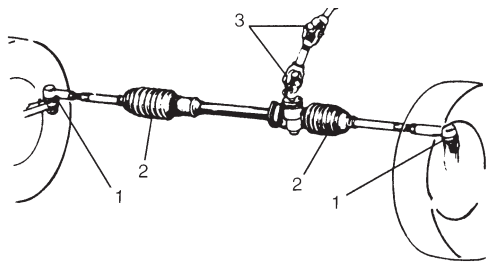

1. Tie-rod end boot
2. Steering gear case boot
3. Universal joint

3) Check steering linkage for looseness and damage. Repair or replace defective parts, if any.
4) Check boots of steering linkage and steering gear case for damage (leaks, detachment, tear, etc.). If damage is found, replace defective boot with new one.
   If any dent is found on steering gear case boots, correct it to original shape by turning steering wheel to the right or left as far as it stops and holding it for a few seconds.
5) Check universal joints of steering shaft for rattle and damage. If rattle or damage is found, replace defective part with a new one.
6) Check that steering wheel can be turned fully to the right and left. Repair or replace defective parts, if any.
7) If equipped with power steering system, check also, in addition to above check items, that steering wheel can be turned fully to the right and left more lightly when engine is running at idle speed than when it is stopped. Repair, if found faulty.
8) Check wheel alignment referring to Section 3A.

ITEM 6-6

Manual Transmission Oil Inspection and Change

[Inspection]

1) Inspect transmission case for evidence of oil leakage.
   Repair leaky point if any.
2) Make sure that vehicle is placed level for oil level check.
3) Remove oil filler/level plug (1) of transmission.
4) Check oil level.
   Oil level can be checked roughly by means of filler/level plug hole. That is, if oil flows out of level plug hole or if oil level is found up to hole when level plug is removed, oil is properly filled.
   If oil is found insufficient, pour specified oil up to level hole.
   For specified oil, refer to description of oil change under On-Vehicle Service in Section 7A.
5) Apply sealant to filler/level plug and tighten it to specified torque.

[Change]

1) Place the vehicle level and drain oil by removing drain plug (2).
2) Apply sealant to drain plug after cleaning it and tighten drain plug to specified torque.
3) Pour specified oil up to level hole.
4) Tighten filler plug to specified torque.
   For recommended oil, its amount and tightening torque data, refer to On-Vehicle Service of Section 7A.

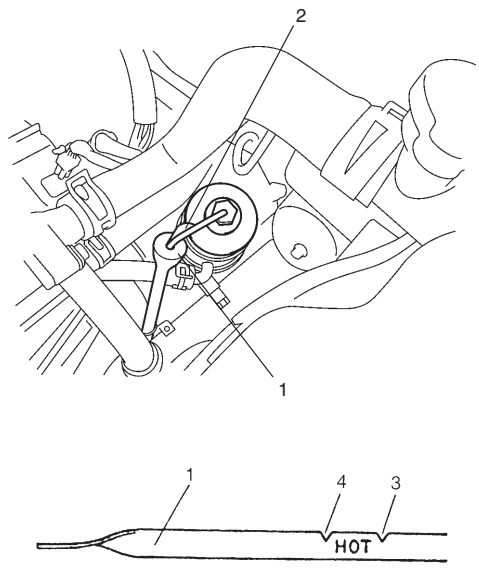

1. Dipstick
2. Clamp
3. FULL HOT mark
4. LOW HOT mark

ITEM 6-7

Automatic Transmission Fluid Inspection and Change

[Fluid level inspection]

1) Inspect transmission case for evidence of fluid leakage. Repair leaky point, if any.
2) Make sure that vehicle is placed level for fluid level check.
3) Unclamp dipstick and pull out it. Check fluid level. For fluid level checking procedure, refer to SECTION 7B and be sure to perform it under specified conditions. If fluid level is low, replenish specified fluid.

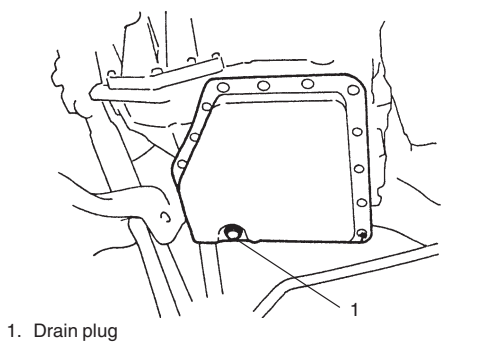

1. Drain plug

[Fluid change]

1) Perform steps 1) and 2) of above Fluid Level Inspection.
2) Change fluid with new specified fluid referring to SECTION 7B.

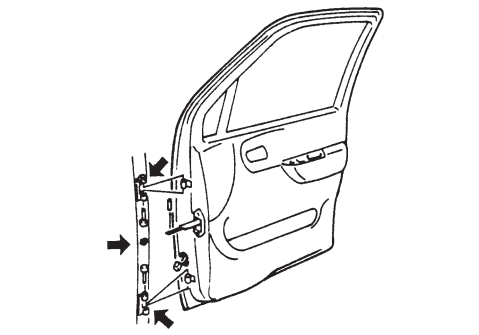

ITEM 6-8

All Latches, Hinges and Locks Inspection

Doors

Check that each door of front, rear and back doors opens and closes smoothly and locks securely when closed.

If any malfunction is found, lubricate hinge and latch or repair door lock system.

Engine hood

Check that secondary latch operates properly (check that secondary latch keeps hood from opening all the way even when pulling hood release handle inside vehicle.) Also check that hood opens and closes smoothly and properly and hood locks securely when closed.

If any malfunction is found, lubricate hinge and latch, or repair hood lock system.

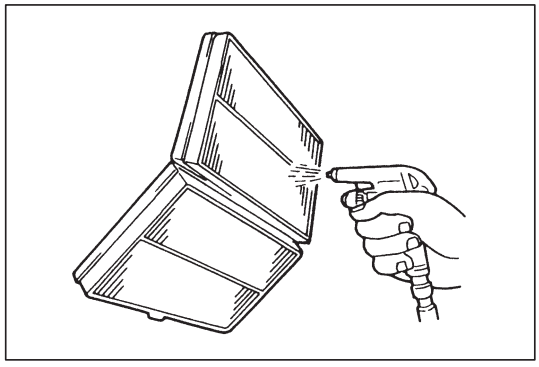

ITEM 6-9

Ventilator Air Filter (if equipped)

Inspection

1) Remove air filter from air inlet box or cooling unit referring to Section 1B.
2) Check filter for dirt. Replace excessively dirty filter.
3) Blow off dust by compressed air from air outlet side of filter.
4) Install filter to air inlet box or cooling unit referring to Section 1B.

Replacement

Replace ventilator air filter with new one referring to Section 1B.

FINAL INSPECTION

WARNING:
When carrying out road tests, select a safe place where no man or no running vehicle is seen so as to prevent any accident.

Seats

Check that seat slides smoothly and locks securely at any position. Also check that reclining mechanism of front seat back allows it to be locked at any angle.

Seat Belt

Inspect belt system including webbing, buckles, latch plates, retractors and anchors for damage or wear. Check that seat belt is securely locked.

Battery Electrolyte Level Check

Check that the electrolyte level of all battery cells is between the upper and lower level lines on the case. If battery is equipped with built-in indicator, check battery condition by the indicator.

Accelerator Pedal Operation

Check that pedal operates smoothly without getting caught or interfered by other part.

Engine Start

Check engine start for readiness.

WARNING:
Before performing the following check, be sure to have enough room around the vehicle. Then, firmly apply both the parking brake and the regular brakes. Do not use the accelerator pedal. If the engine starts, be ready to turn off the ignition promptly. Take these precautions because the car could move without warning and possibly cause personal injury or property damage.

On automatic transmission vehicles, try to start the engine in each select lever position. The starting motor should crank only in “P” (Park) or “N” (Neutral).
On manual transmission vehicles, place the shift lever in “Neutral”, depress clutch pedal fully and try to start.

Exhaust System Check

Check for leakage, cracks or loose supports.

Clutch (For Manual transmission)

Check for the following.
- Clutch is completely released when depressing clutch pedal,
- No slipping clutch occurs when releasing the clutch pedal and accelerating,
- Clutch itself is free from any abnormal condition.

Gearshift or Select Lever (Transmission)

Check gear shift or select lever for smooth shifting to all positions and for good performance of transmission in any position.
With automatic transmission equipped vehicle, also check that shift indicator indicates properly according to which position select lever is shifted to.

Brake

[Foot brake]
Check the following;
- that brake pedal has proper travel,
- that brake works properly,
- that it is free from noise,
- that vehicle does not pull to one side when brake is applied,
- and that brake do not drag.

[Parking brake and automatic transmission “P” (Park) mechanism]
Check that parking brake lever has proper travel.

WARNING:
With vehicle parked on a fairly steep slope, make sure nothing is in the way downhill to avoid any personal injury or property damage. Be prepared to apply regular brake quickly even if vehicle should start to move.

Check to ensure that parking brake is fully effective when the vehicle is stopped on the safe slope and brake lever is pulled all the way.
Make sure that vehicle is at complete stop when select lever is shifted to “P” range position and all brakes are released.

Steering

- Check to ensure that steering wheel is free from instability, or abnormally heavy feeling.
- Check that the vehicle does not wander or pull to one side.

Engine

- Check that engine responds readily at all speeds.
- Check that engine is free from abnormal noise and abnormal vibration.

Body, Wheels and Power Transmitting System

Check that body, wheels and power transmitting system are free from abnormal noise and abnormal vibration or any other abnormal condition.

Meters and Gauge

Check that speedometer, odometer, fuel meter, temperature gauge, etc. are operating accurately.

Lights

Check that all lights operate properly.

Windshield Defroster

Periodically check that air comes out from defroster outlet when operating heater or air conditioning.
Set fan switch lever to “HI” position for this check.

RECOMMENDED FLUIDS AND LUBRICANTS

Engine oil	SE, SF, SG, SH or SJ (Refer to engine oil viscosity chart in item 1-4.)
Engine coolant (Ethylene glycol base coolant)	“Anti-freeze/Anti-corrosion coolant”
Brake fluid	DOT4 or SAE J1704
Manual transmission oil	API GL-4, SAE75W-90 (Refer to Section 7A for detail)
Automatic transmission fluid	An equivalent of DEXRON®-III
Door hinges	Engine oil or water resistance chassis grease
Hood latch assembly	
Key lock cylinder	Spray lubricant

SECTION 1A

HEATER AND VENTILATION

WARNING:
For vehicles equipped with Supplemental Restraint (Air Bag) System:

- **Service on and around the air bag system components or wiring must be performed only by an authorized SUZUKI dealer. Refer to "Air Bag System Components and Wiring Location View" under "General Description" in air bag system section in order to confirm whether you are performing service on or near the air bag system components or wiring. Please observe all WARNINGS and "Service Precautions" under "On-Vehicle Service" in air bag system section before performing service on or around the air bag system components or wiring. Failure to follow WARNINGS could result in unintentional activation of the system or could render the system inoperative. Either of these two conditions may result in severe injury.**
- **Technical service work must be started at least 90 seconds after the ignition switch is turned to the "LOCK" position and the negative cable is disconnected from the battery. Otherwise, the system may be activated by reserve energy in the Sensing and Diagnostic Module (SDM).**

NOTE:
The link mechanism of the heater varies depending on the specifications.

CONTENTS

GENERAL DESCRIPTION

The heater and ventilation consist of the following parts.

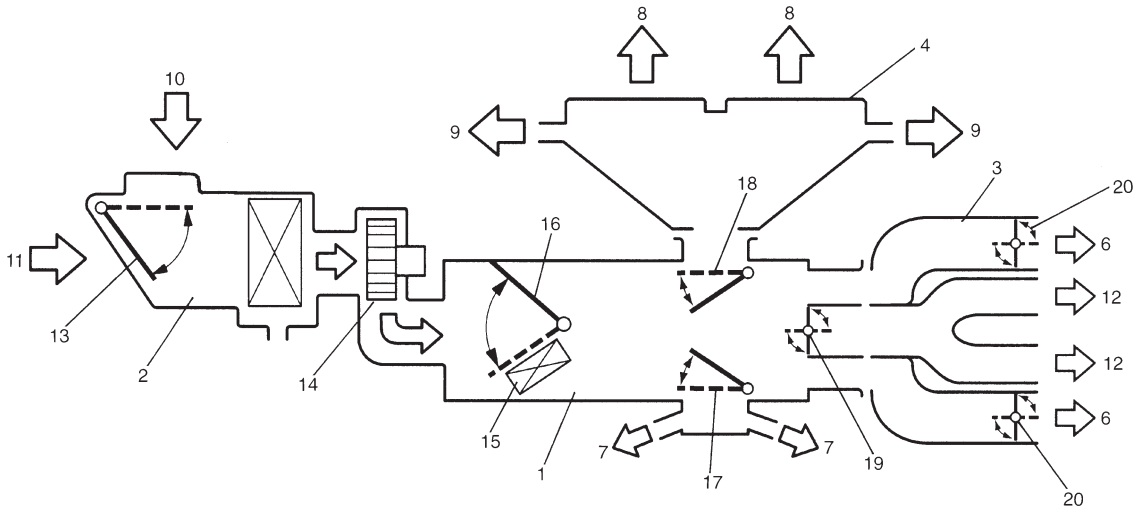

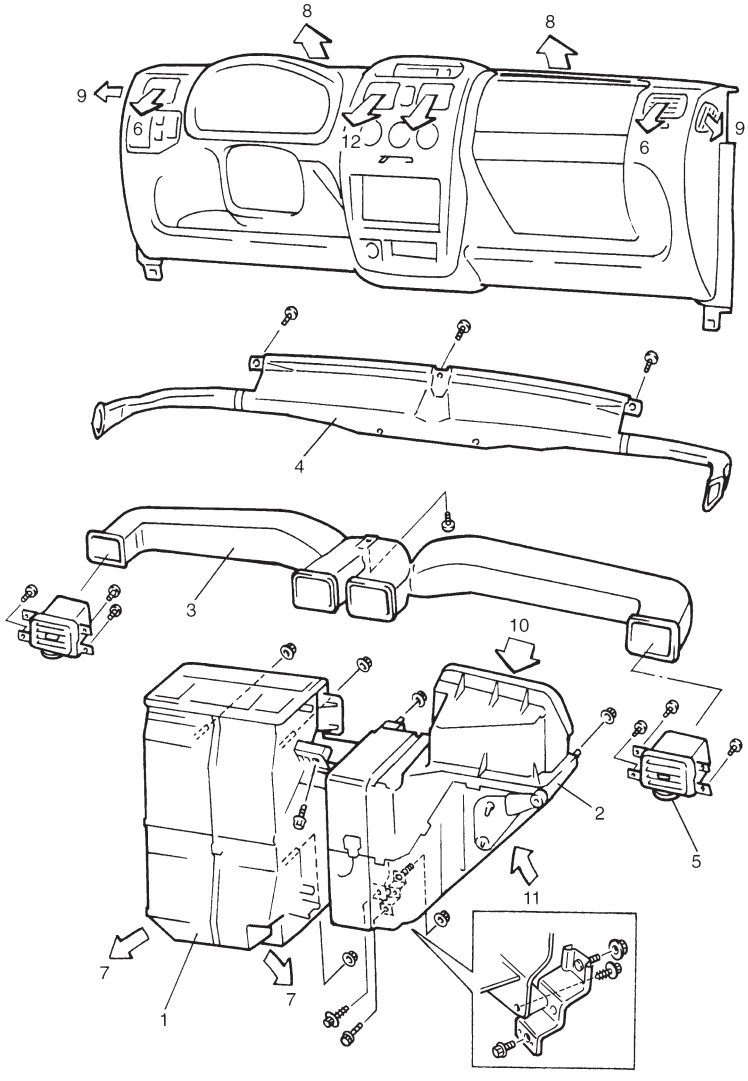

1. Heater Unit
2. Air inlet box
3. Ventilator duct
4. Defroster nozzle
5. Ventilator outlet
6. Side ventilation air
7. Foot air
8. Front defroster air
9. Side defroster air
10. Fresh air
11. Recirculation air
12. Center ventilation air
13. Air inlet select door
14. Blower motor
15. Heater core (heater radiator)
16. Temperature control door
17. Foot air control door
18. Defroster air control door
19. Ventilation air control door
20. Side ventilation control door

DIAGNOSIS

DIAGNOSIS TABLE

Trouble	Possible Cause	Remedy
Heater blower won't work even when its switch is ON.	● Blower fuse blown ● Blower resistor faulty ● Blower switch faulty ● Blower motor faulty ● Wiring or grounding faulty	Check for short to ground and replace fuse. Check resistor. Check blower switch. Replace motor. Repair as necessary.
Incorrect temperature output.	● Control cables broken or binding ● Temperature control lever faulty ● Control cable clamp position is faulty ● Air damper broken ● Air ducts clogged ● Heater radiator leaking or clogged ● Heater hoses leaking or clogged ● Thermostat faulty	Check cables. Check control lever. Check and adjustment. Repair damper. Repair air ducts. Replace radiator. Replace hoses. Check thermostat.
When mode control lever is changed, air outlet port is not changed or lever position disagree with air outlet port.	● Control cables broken or binding ● Air damper broken ● Air ducts clogged ● Air damper broken ● Air ducts leaking or clogged	Check cable. Check control lever. Check and adjustment. Repair damper. Repair air ducts.

WIRING CIRCUIT

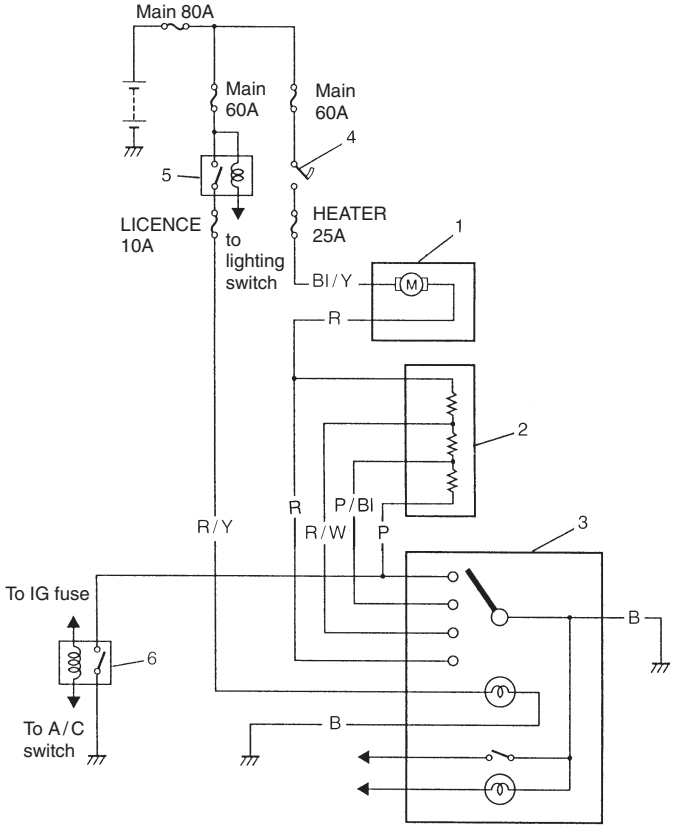

1. Blower motor
2. Blower motor resistor
3. Blower switch
4. Ignition switch
5. Lighting relay
6. A / C relay (if equipped with A / C)

ON VEHICLE SERVICE

HEATER UNIT

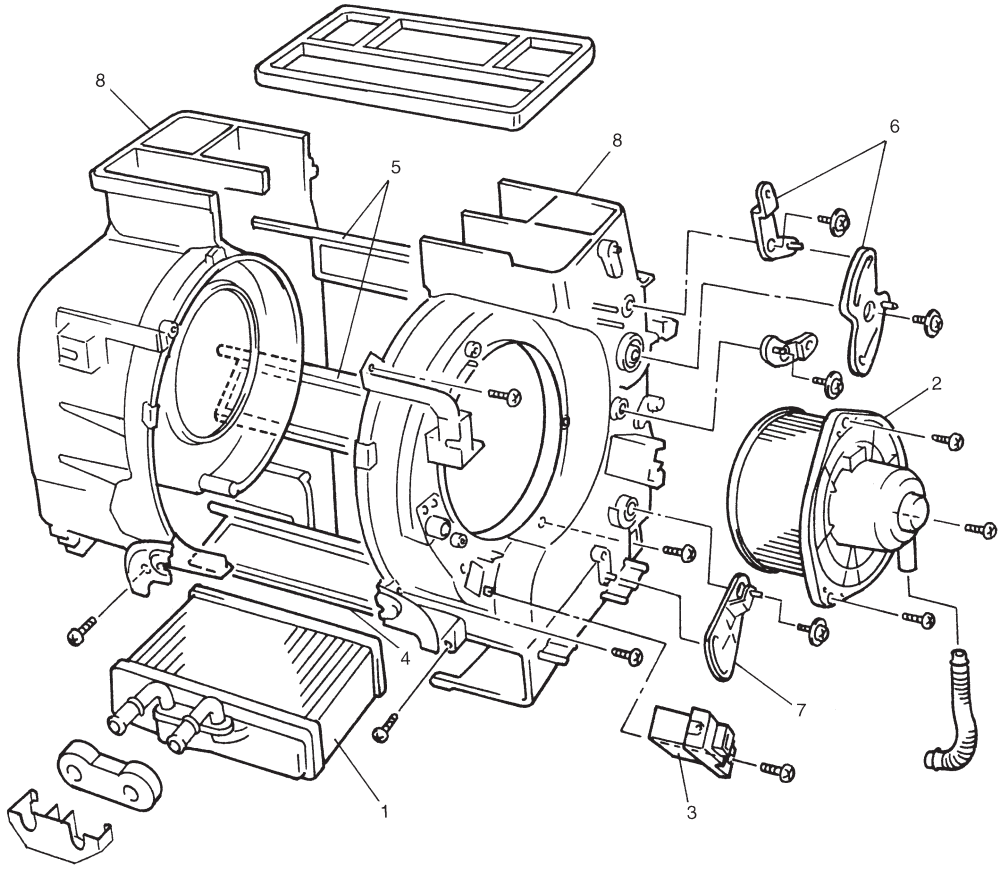

1. Heater core
2. Blower motor assembly
3. Blower resistor
4. Temperature door assembly
5. Mode door assembly
6. Mode lever
7. Temperature lever
8. Heater case

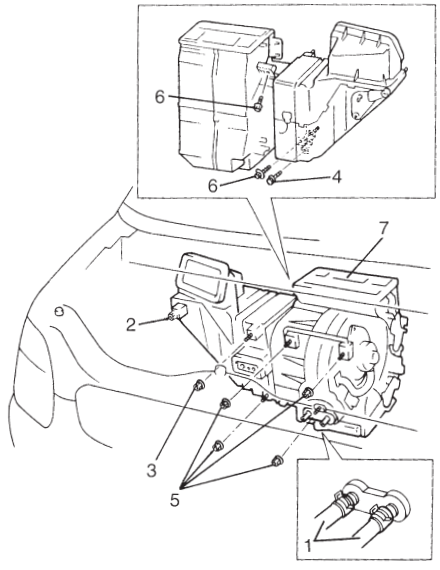

REMOVAL

1) Disconnect negative (–) cable at battery.
2) If equipped with air bag system, disable air bag system.
   Refer to DISABLING AIR BAG SYSTEM in Section 10B.
3) Drain engine coolant and disconnect heater hoses (1) from heater unit.
4) Remove instrument panel.
   Refer to INSTRUMENT PANEL in Section 9.
   Loosen air inlet box (cooling unit) mounting nut (2), and remove mounting nut (3).
5) Remove bolts (4), nuts (5) and screws (6).
6) Remove heater unit (7).

INSTALLATION

Install heater unit by reversing removal procedure, noting the following items.

- When installing each part, be careful not to catch any cable or wiring harness.
- Adjust heater control cable (refer to heater control lever assembly in this section).
- Fill engine coolant to radiator.
- If equipped with air bag system, enable air bag system. Refer to "ENABLING AIR BAG SYSTEM" in Section 10B.

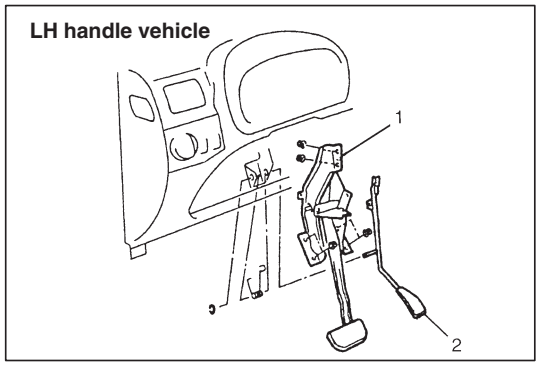

BLOWER MOTOR

REMOVAL

1) Disconnect negative (–) cable at battery.
2) Disable air bag system, if equipped.
   Refer to DISABLING AIR BAG SYSTEM in Section 10B.
3) Remove column hole cover.
4) Remove clutch pedal assembly (RH steering vehicle) or brake pedal assembly (1) and accelerator pedal (2) (LH steering vehicle). Refer to "BRAKE PEDAL" in Section 5A and "CLUTCH PEDAL" in Section 7C.

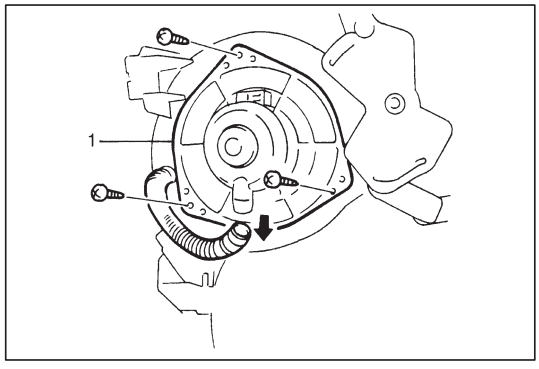

5) Disconnect blower motor couplers.
6) Remove blower motor (1).

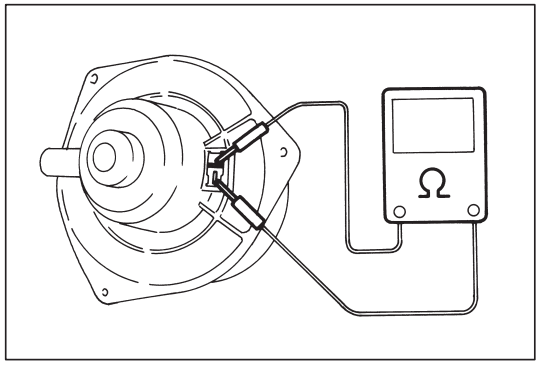

INSPECTION

1) Check continuity between two terminals as shown in figure.
   If there is no continuity, replace blower motor.

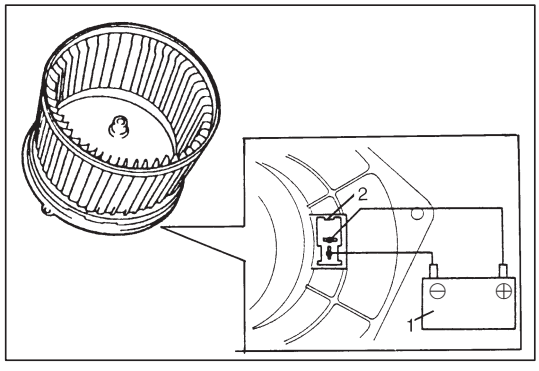

2) Connect battery (1) to blower motor connector (2) as shown, then check that the blower motor operates smoothly.
   If blower motor operates do not smoothly, replace blower motor.

   Reference current data: Approx. 13 – 20 A at 12 V

INSTALLATION

1) Reverse removal procedure for installation.
2) Enable air bag system, if equipped.
   Refer to ENABLING AIR BAG SYSTEM in Section 10B.

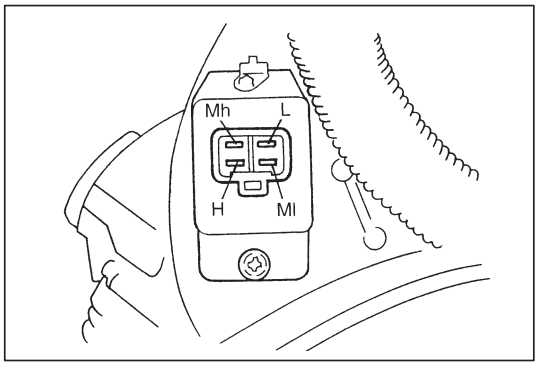

BLOWER MOTOR RESISTOR

INSPECTION

Measure each terminal-to-terminal resistance on resistor.

Resistance	**H – Mh**	**: Approx. 0.6 Ω**
	Mh – Ml	**: Approx. 1.0 Ω**
	Ml – L	**: Approx. 1.8 Ω**

If measured resistance is incorrect, replace heater blower motor resistor.

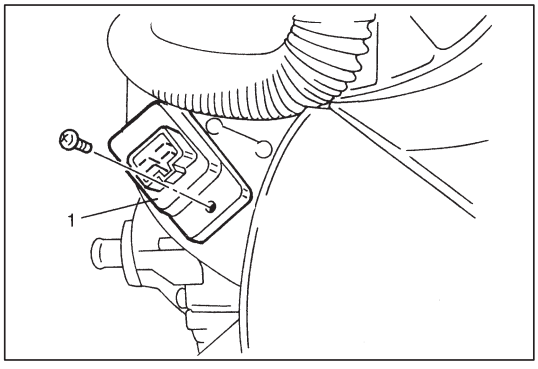

REMOVAL

1) Disconnect negative (–) cable at battery.
2) Disable air bag system, if equipped.
   Refer to DISABLING AIR BAG SYSTEM in Section 10B.
3) Remove clutch pedal bracket (RH steering vehicle), if necessary.
   Refer to “CLUTCH PEDAL” in Section 7C.
4) Disconnect resistor coupler.
5) Remove blower motor resistor (1).

INSTALLATION

1) Reverse removal procedure for installation.
2) Enable air bag system, if equipped.
   Refer to ENABLING AIR BAG SYSTEM in Section 10B.

HEATER CONTROL LEVER ASSEMBLY

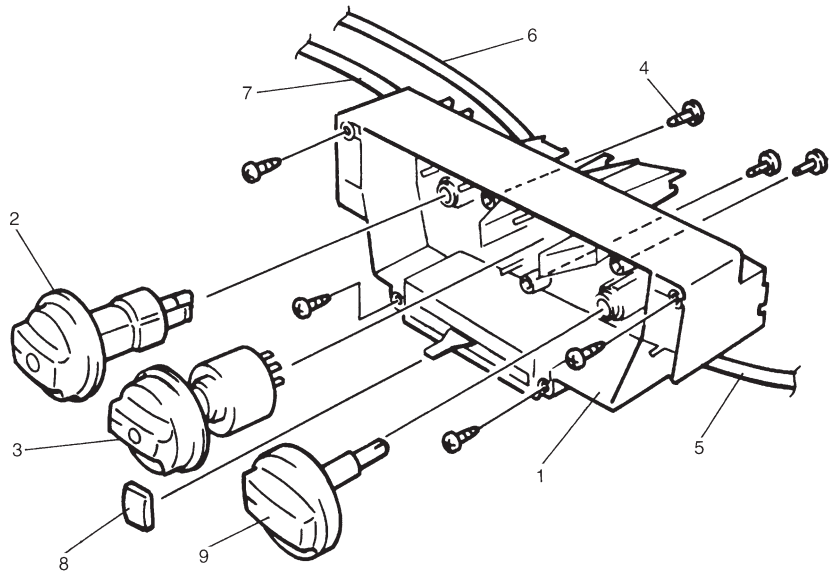

1. Heater control body assembly
2. Temperature control knob assembly (& A/C switch, if equipped)
3. Blower fan & defogger switch assembly
4. Bulb
5. Fresh air control cable
6. Mode control cable
7. Temperature control cable
8. Fresh air control knob assembly
9. Mode control knob assembly

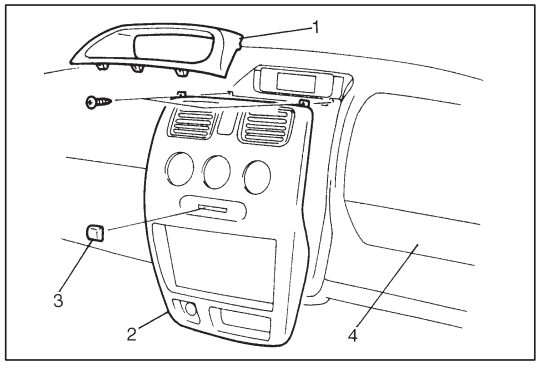

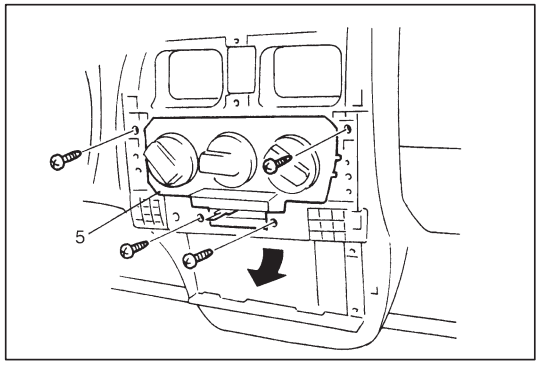

REMOVAL

1) Disconnect negative (–) cable at battery.
2) Disable air bag system, if equipped.
   Refer to DISABLING AIR BAG SYSTEM in Section 10B.
3) Remove ashtray, center upper garnish (1), center lower garnish (2), heater control knob (3), instrument lid (4) and radio or accessory case (if equipped).
4) Disconnect each heater control cables (mode control, temperature control and fresh air control) from heater unit and air inlet box.
5) Disconnect blower fan switch coupler and A/C switch coupler (if equipped).
6) Remove heater control lever assembly (5).
7) Remove blower fan switch.

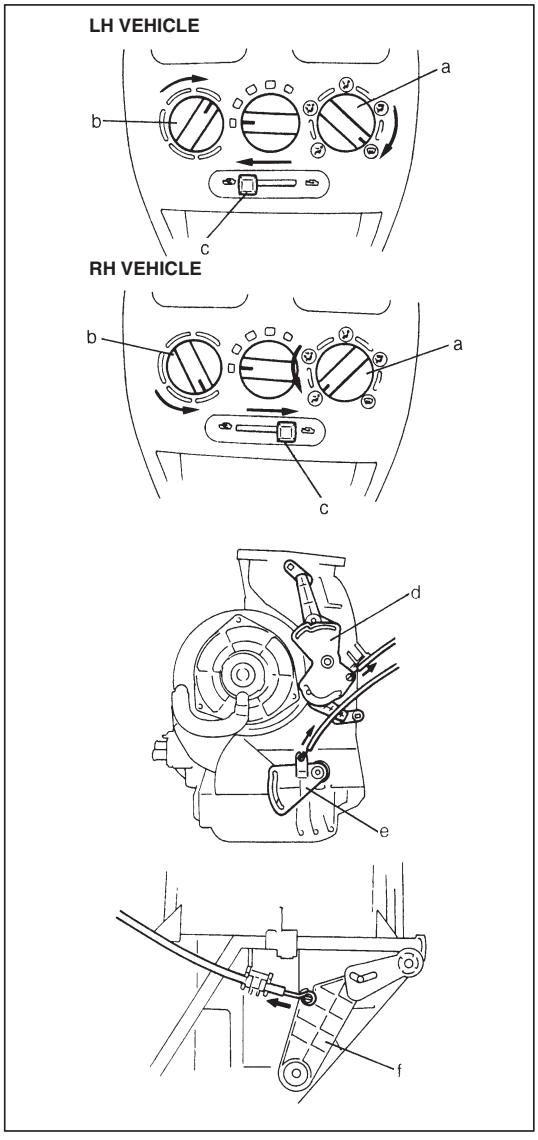

INSTALLATION

1) Reverse removal procedure for installation.
2) Adjust cables as follows.
   i) Move mode control knob (a), temperature control knob (b) and fresh air control knob (c) fully in arrow direction as shown in figure.
   ii) Push mode lever (d), temperature lever (e) and door link (f) fully in arrow direction and fix cable with clamp in position as shown in figure.

   NOTE:
   After installing control cables, be sure that control levers move smoothly and stop at proper position.

3) If equipped with air bag, enable air bag system. Refer to “ENABLING AIR BAG SYSTEM” in “AIR BAG SYSTEM” section.

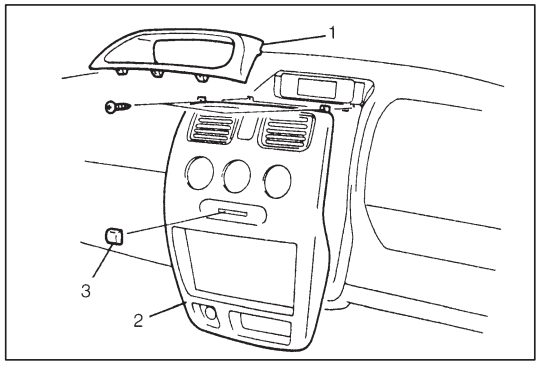

BLOWER FAN & DEFOGGER SWITCH

REMOVAL

1) Disconnect negative (–) cable at battery.
2) Remove ashtray, instrument center upper garnish (1), heater control knob (3), instrument center lower garnish (2) and radio or accessory case (if equipped).
3) Disconnect blower fan switch coupler.

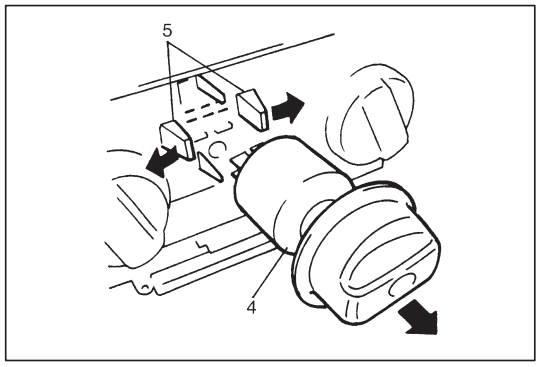

4) Remove blower fan switch (4) with unlocked the locking part (5) as shown in figure.

INSTALLATION

Reverse removal sequence to install blower fan switch.

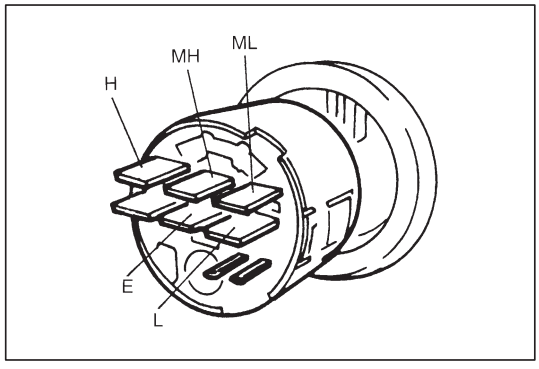

INSPECTION OF BLOWER FAN SWITCH

Check blower fan switch for each terminal-to-terminal continuity. For the detail refer to “WIRING CIRCUIT” earlier in this section.

POSITION \ TERMINAL	E	L	M_L	M_H	H
OFF	○				
1	○	○			
2	○		○		
3	○			○	
4	○				○

AIR INLET BOX

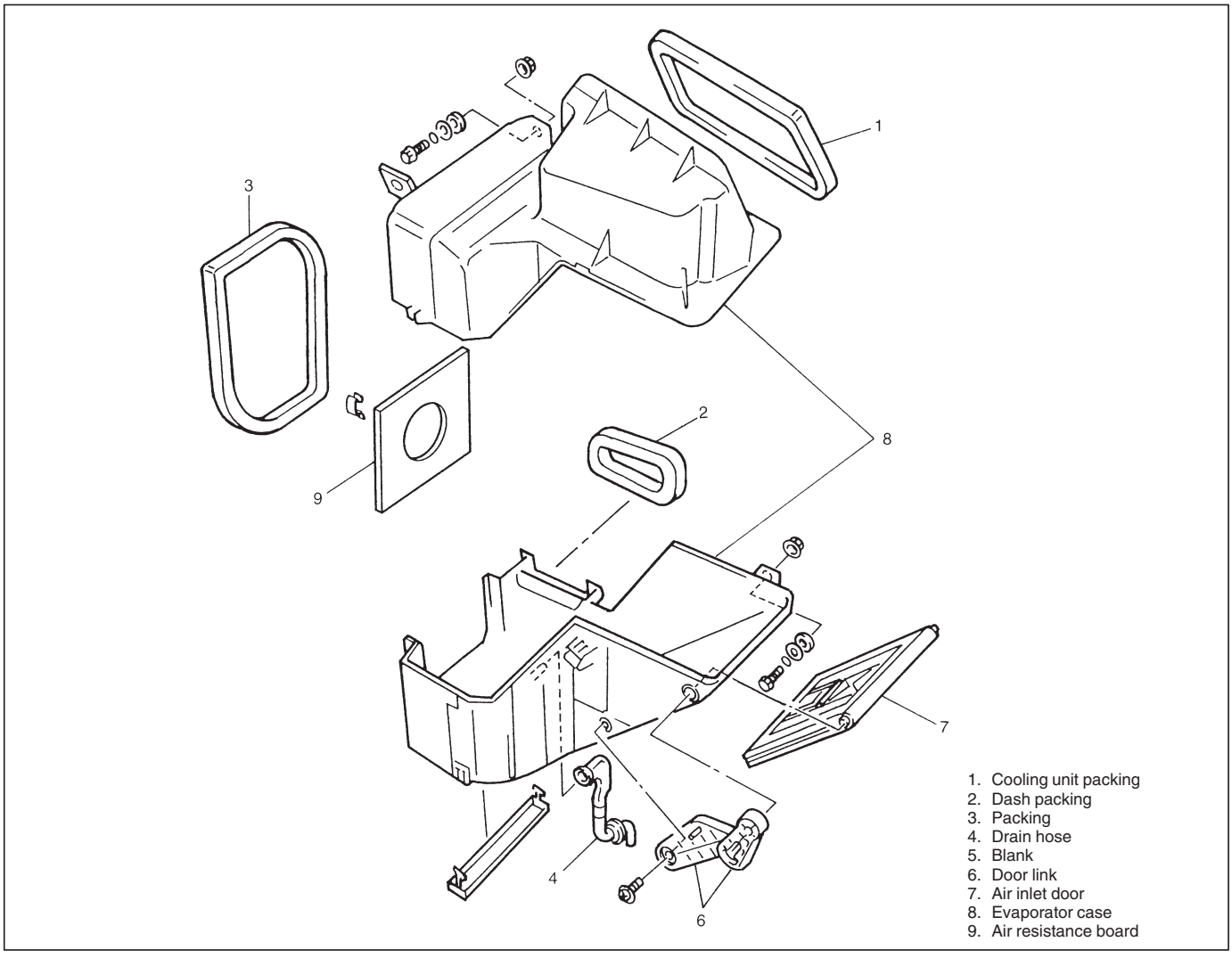

REMOVAL AND INSTALLATION

Refer to “COOLING UNIT” in “AIR CONDITIONING” section.

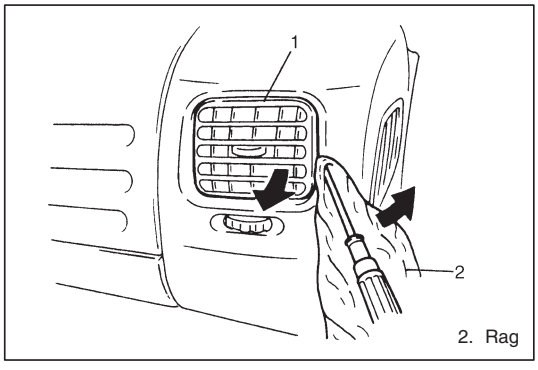

VENTILATION LOUVER

REMOVAL AND INSTALLATION

Remove ventilation louver (1) as shown in figure, and reverse removal sequence to install ventilation louver.

SECTION 1B

AIR CONDITIONING (OPTIONAL)

WARNING:
For vehicles equipped with Supplemental Restraint (Air Bag) System:

- **Service on and around the air bag system components or wiring must be performed only by an authorized SUZUKI dealer. Refer to "Air Bag System Components and Wiring Location View" under "General Description" in air bag system section in order to confirm whether you are performing service on or near the air bag system components or wiring. Please observe all WARNINGS and "Service Precautions" under "On-Vehicle Service" in air bag system section before performing service on or around the air bag system components or wiring. Failure to follow WARNINGS could result in unintentional activation of the system or could render the system inoperative. Either of these two conditions may result in severe injury.**
- **Technical service work must be started at least 90 seconds after the ignition switch is turned to the "LOCK" position and the negative cable is disconnected from the battery. Otherwise, the system may be activated by reserve energy in the Sensing and Diagnostic Module (SDM).**

CAUTION:
The air conditioning system of this vehicle uses refrigerant HFC-134a (R-134a).
None of refrigerant, compressor oil and component parts is interchangeable between two types of A/C: one using refrigerant CFC-12 (R-12) and the other using refrigerant HFC-134a (R-134a).
Be sure to check which refrigerant is used before any service work including inspection and maintenance. For identification between these two types, refer to the description in page 1B-2.
When replenishing or changing refrigerant and compressor oil and when replacing parts, make sure that the material or the part to be used is appropriate to the A/C installed in the vehicle being serviced. Use of incorrect one will result in leakage of refrigerant, damage in parts or other faulty condition.

For basic servicing method of the air conditioning system that is not described in this section, refer to AIR CONDITIONING BASIC MANUAL (99520-02130).

CONTENTS

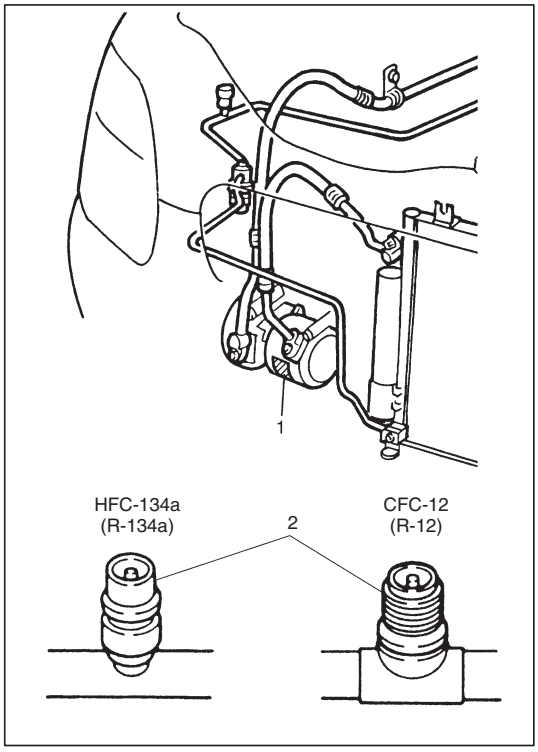

GENERAL DESCRIPTION

Whether the A/C in the vehicle being serviced uses HFC-134a (R-134a) or CFC-12 (R-12) is indicated on LABEL (1) on the compressor. Also, it can be checked by the shape of the service (charge) valve (2).

REFRIGERANT FLOW OF AIR CONDITIONING SYSTEM

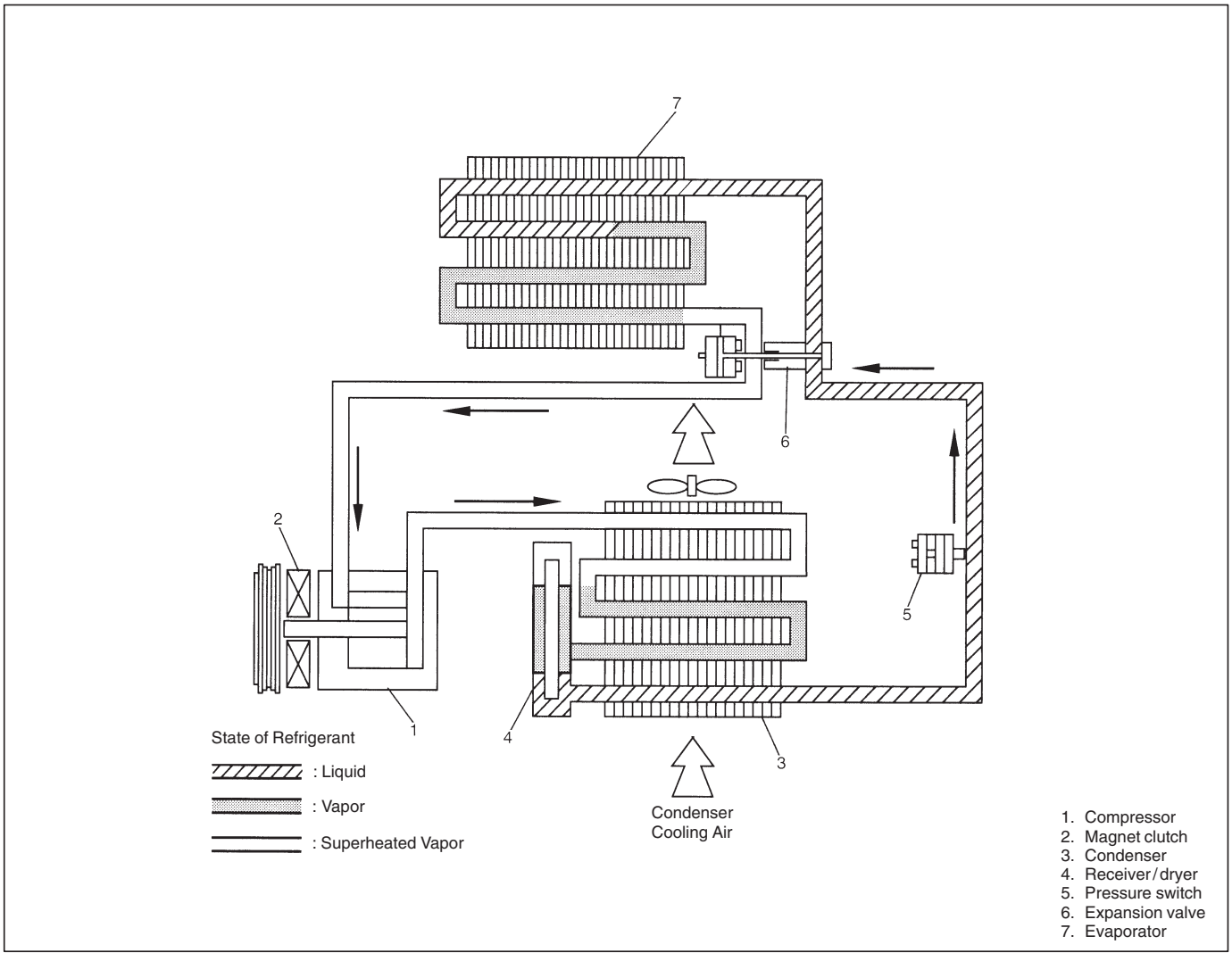

MAJOR COMPONENTS AND LOCATION

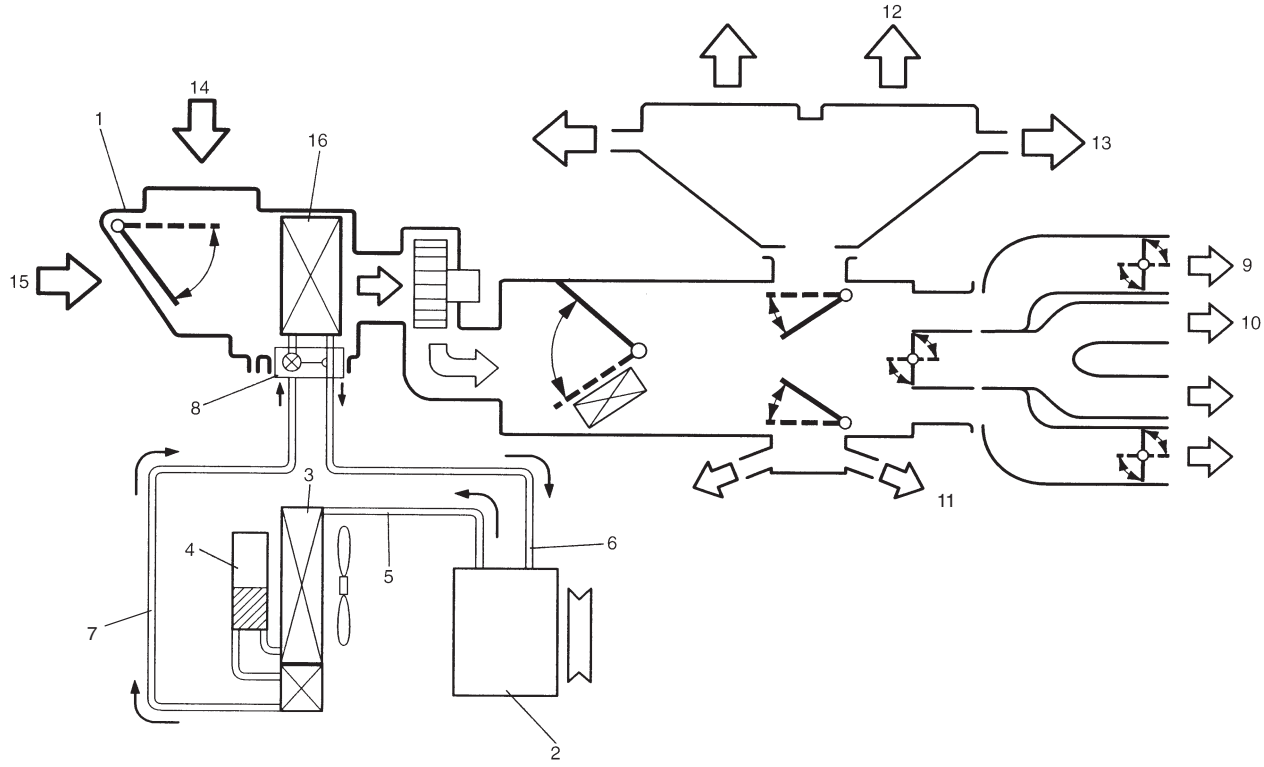

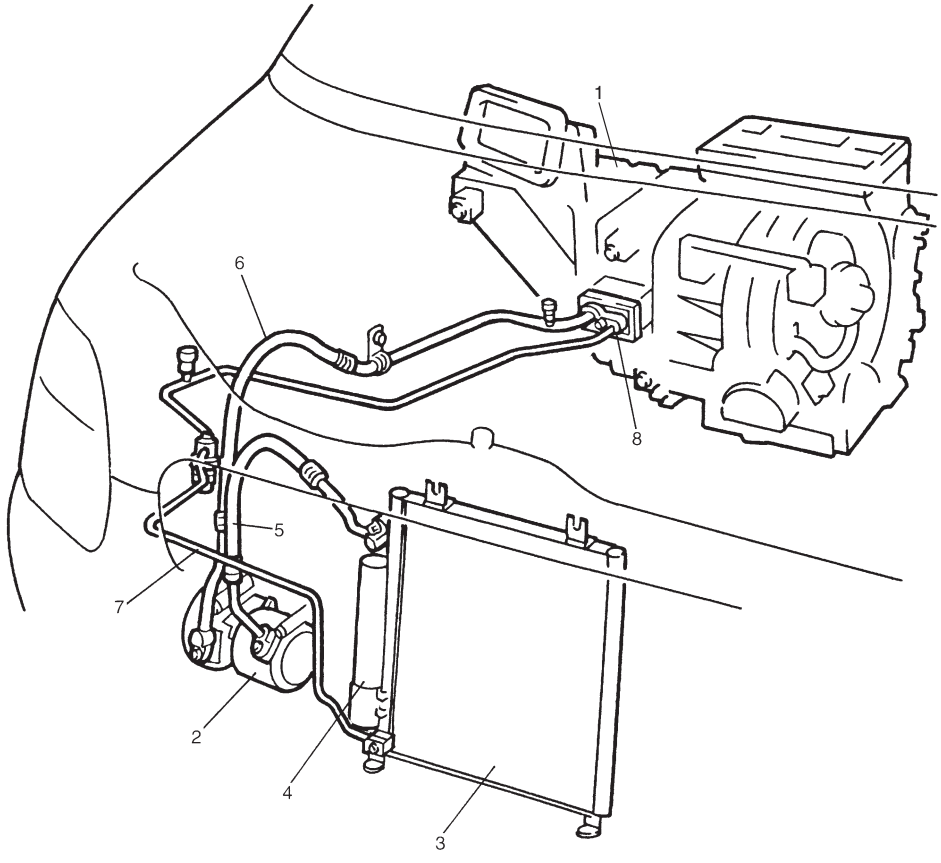

1. Cooling unit
2. Compressor
3. Condenser assembly
4. Receiver/dryer
5. Discharge hose
6. Suction hose
7. Liquid pipe
8. Expansion valve
9. Side ventilation air
10. Center ventilation air
11. Foot air
12. Front defroster air
13. Side defroster air
14. Fresh air
15. Recirculation air
16. Evaporator

DIAGNOSIS

GENERAL DIAGNOSIS TABLE

Condition	Possible Cause	Correction
Cool air does not come out (A/C system improper operative)	**A/C system inoperative**	
	● No refrigerant	Recover, evacuation and charging.
	● Fuse blown	Check “IG COIL” fuse, “HEATER” fuse and check for short circuit to ground.
	● A/C switch faulty	Check A/C switch.
	● Blower fan switch faulty	Check blower fan switch.
	● A/C thermistor faulty	Check A/C thermistor.
	● Dual pressure switch faulty	Check dual pressure switch.
	● Wiring or grounding faulty	Repair as necessary.
	● ECT sensor faulty	Check ECT sensor.
	● ECM faulty	Check ECM.
	Compressor inoperative (dose not rotate)	
	● Magnet clutch faulty	Check magnet clutch.
	● Drive belt loose or broken	Adjust or replace drive belt.
	● Compressor faulty	Check compressor.
	● ECM faulty	Check ECM.
	Radiator (and condenser), cooling fan motor inoperative	
	● Fuse blown	Check RDTR fuse and check short circuit to ground.
	● Radiator cooling fan relay faulty	Check radiator cooling fan relay.
	● Wiring or grounding faulty	Repair as necessary.
	● Radiator cooling fan motor faulty	Check radiator cooling fan motor.
	● ECM faulty	Check ECM.
	Blower motor inoperative	
	● Fuse blown	Check “HEATER” fuse and check for short circuit to ground.
	● Blower resistor faulty	Check blower motor resistor.
	● Blower fan switch faulty	Check blower fan switch.
	● Wiring or grounding faulty	Repair as necessary.
	● Blower motor faulty	Check blower motor.
When the blower fan switch is OFF position, blower motor does not operate at A/C switch is ON	● A/C blower motor relay faulty	Check A/C blower motor relay.
	● Wiring or grounding faulty	Repair as necessary.
	● A/C switch faulty	Check A/C switch.
Cool air does not come out or insufficient cooling (A/C system normal operative)	● Insufficient or excessive charge of refrigerant	Check charge of refrigerant. Check system for leaks.
	● Condenser clogged	Check condenser.
	● Evaporator clogged or frosted	Check evaporator and position of A/C thermistor.
	● A/C thermistor faulty	Check A/C thermistor.
	● Expansion valve faulty	Check expansion valve.
	● Receiver/dryer clogged	Check receiver/dryer.
	● Drive belt slipping	Check or replace drive belt.
	● Magnetic clutch faulty	Check magnetic clutch.

Condition	Possible Cause	Correction
Cool air does not come out or insufficient cooling (A/C system normal operative)	● Compressor faulty ● Air in A/C system ● Air leaking from cooling unit or air duct ● Heater and ventilation system faulty ● Blower motor faulty ● Excessive compressor oil existing in A/C system	Check compressor. Replace receiver/dryer, and evacuation and charging. Repair as necessary. Check air inlet box assembly. Check heater control lever assembly. Check heater assembly. Check blower motor. Evacuate and charge system.
Cool air does not comes out only intermittently	● Wiring connection faulty ● Expansion valve faulty ● Excessive moisture in A/C system ● Magnetic clutch faulty ● Excessive charge of refrigerant	Repair as necessary. Check expansion valve. Replace receiver/dryer, and evacuation and charging. Check magnetic clutch. Check charge of refrigerant.
Cool air comes out only at high speeds	● Condenser clogged ● Insufficient charge of refrigerant ● Air in A/C system ● Drive belt slipping ● Compressor faulty	Check condenser. Check charge of refrigerant. Replace receiver/dryer, and evacuation and charging. Check or replace drive belt. Check compressor.
Cool air does not come out only at high speeds	● Excessive charge of refrigerant ● Evaporator frosted	Check charge refrigerant. Check evaporator.
Insufficient velocity of cooled air	● Evaporator clogged or frosted ● Air leaking from cooling unit or air duct ● Blower motor faulty ● Wiring or grounding faulty ● Air filter element clogged	Check evaporator. Repair as necessary. Check blower motor. Repair as necessary. Check air filter element.

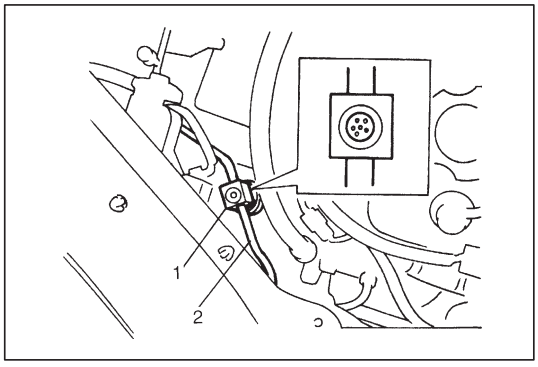

QUICKLY CHECKING OF REFRIGERANT CHARGE

CHARGE OF REFRIGERANT

When the A/C inlet temperature is within 30 – 35°C.
The following procedure can be used for quickly checking whether the A/C system has a proper charge of refrigerant or not.
Run engine at fast idle, and operate A/C at its maximum cooling capacity for a few minutes. Then, look at the sight glass (1) on liquid pipe (2) and compare what is observed with the symptoms listed in "CHECKING REFRIGERANT CHARGE" table given below.

CHECKING REFRIGERANT CHARGE

Item No.	Symptom	Charge of refrigerant	Correction
1	Bubbles observed in sight glass	Insufficient charge of refrigerant in system	Check system for leaks with a leak tester.
2	No bubbles observed in sight glass	No or insufficient charge of refrigerant in system	Refer to the items 3 and 4.
3	No temperature difference between compressor inlet and outlet	Empty or nearly empty system	Evacuate and charge system and then check it for leaks with a leak tester.
4	Noticeable temperature difference between compressor inlet and outlet	Proper or too much charge of refrigerant in system	Refer to the items 5 and 6.
5	When A/C is turned OFF, refrigerant in sight glass clears immediately and remains clear	Too much charge of refrigerant in system	Discharge excess charge of refrigerant to adjust it to a specified charge.
6	When A/C is turned OFF, refrigerant in sight glass once produces bubbles and then clears	Proper charge of refrigerant in system	NO CORRECTION NEEDED BECAUSE CHARGE OF REFRIGERANT IS NORMAL.

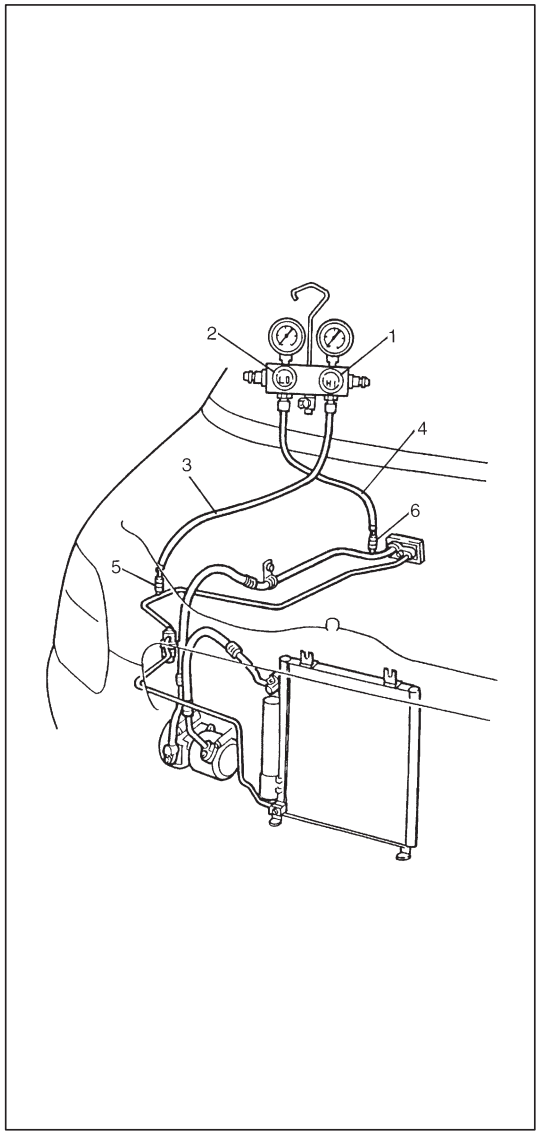

DIAGNOSIS TEST

1) Confirm that vehicle and environmental conditions are as follows.
   – Vehicle is not exposed to direct sun.
   – Ambient temperature is within 15°C – 35°C (59°F – 95°F).
2) Make sure that high pressure valve (1) and low pressure valve (2) of manifold gauge are firmly closed.
3) Connect high pressure charging hose (3) to high pressure service valve (5) on vehicle, and connect low pressure charging hose (4) to low pressure service valve (6) on vehicle.
4) Bleed the air in charging hoses (3), (4) by loosening their respective nuts on manifold gauge, utilizing the refrigerant pressure. When a hiss is heard, immediately tighten nut.

> **CAUTION:**
> **Do not interchange high and low pressure charging hoses by mistake.**

5) Warm up engine to normal operating temperature and keep it at specified idle speed.
6) Turn A/C switch ON, and set blower switch at “HI”, temperature control knob at “COOL”, mode control knob at “FACE”, fresh/circulation control lever at “CIRCULATION”. (Confirm that A/C compressor and condenser fan are working.)
7) Keep all windows, doors and engine hood open.

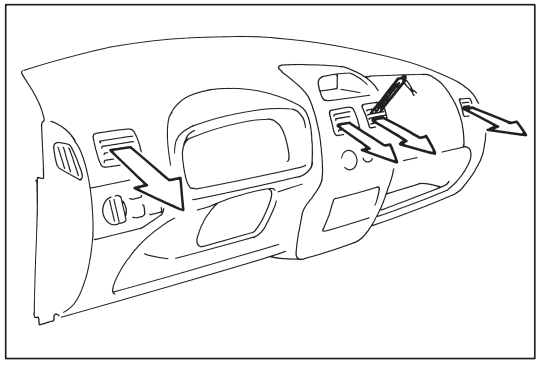

A/C inlet air temperature	15 – 35°C (59 – 95°F)
Engine rpm	Keep 1500 rpm
Blower switch	Max.
Temperature control	Max. cold
Doors	All open
Air inlet damper position	Recirculation

8) With about 20 mm (0.8 in.) of dry bulb thermometer inserted into center duct air outlet and another one set near evaporator air inlet, read temperature indicated on each thermomenter.

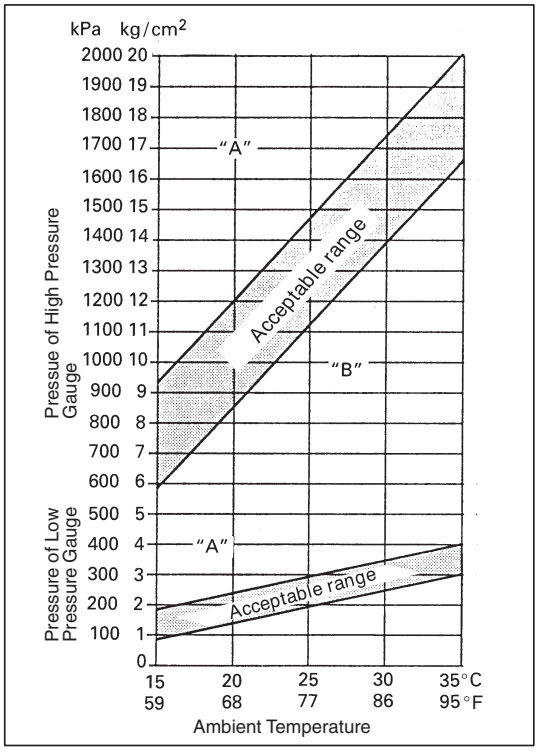

9) Check for each pressure of low side and high side if it is within shaded range of left graph.

NOTE:
Pressure registered on gauge varies with ambient temperature. Therefore, use left graphs when determining if pressures are normal or not.

Example:

Gauges should read as follows when ambient temperature is 30°C	
Pressure on high pressure gauge (HI):	**1400 – 1750 kPa** **14.0 – 17.5 kg/cm^2**
Pressure on low pressure gauge (LO):	**230 – 350 kPa** **2.3 – 3.5 kg/cm^2**

If each gauge reading is out of specified pressure, correct defective part referring to following Test Diagnosis table.

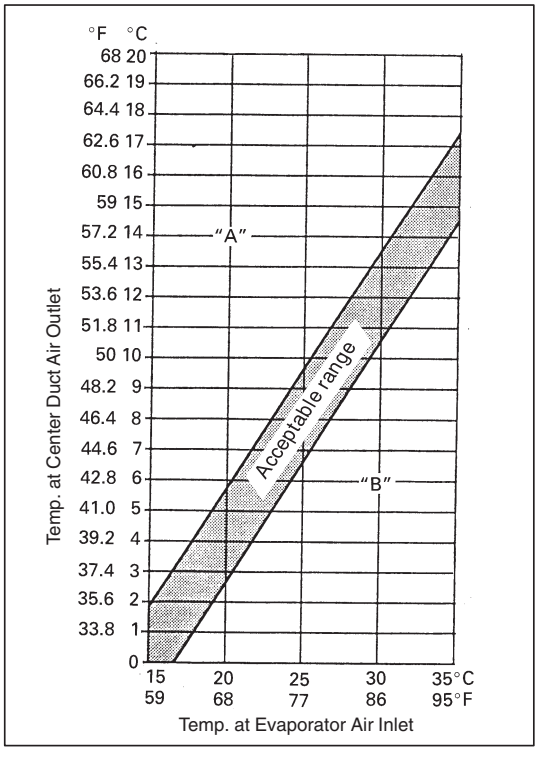

10) Check inlet port temperature-to-outlet port temperature relationship using graph at the left.
For example, if evaporator inlet port temperature is 25°C (77°F) and center duct air outlet temperature is 8°C (46.4°F), their crossing point is within acceptable range as shown in graph at the left.
In this case, cooling performance is satisfactory and proper.

11) If crossing point is out of acceptable range, diagnose trouble referring to following Test Diagnosis table.

DIAGNOSIS TEST TABLE

	TESTING RESULTS	POSSIBLE CAUSE	REMEDY
HIGH PRESSURE GAUGE	Pressure high (“A” area of high side graph)	● Refrigerant overcharged ● Expansion valve frozen or clogged ● Clogged refrigerant passage of high side ● Condenser fan malfunction — Insufficient cooling of condenser ● Dirty or bent condenser fins — Insufficient cooling of condenser ● Compressor malfunction (Insufficient oil etc.) ● Engine overheat	● Recharge ● Check expansion valve ● Clean or replace ● Check condenser fan ● Clean or repair ● Check compressor ● Check engine cooling system
	Pressure low (“B” area of high side graph)	● Insufficient refrigerant (Insufficient charge or leakage) ● Expansion valve malfunction (valve opens too wide) ● Compressor malfunction (Insufficient compression)	● Check for leakage, repair if necessary and recharge ● Check expansion valve ● Check compressor
LOW PRESSURE GAUGE	Pressure high (“A” area of high side graph)	● Expansion valve malfunction (valve opens too wide) ● Compressor malfunction (Insufficient compression)	● Check expansion valve ● Check compressor
	Pressure low (“B” area of high side graph)	● Insufficient refrigerant (Insufficient charge or leakage) ● Expansion valve malfunction (valve opens too narrow) ● Clogged refrigerant passage (crashed pipe)	● Check for leakage, repair if necessary and recharge ● Check expansion valve ● Repair or replace
THERMOMETER AT CENTER DUCT	Outlet air temperature at center duct is high (Crossing point is in area “A”)	● Insufficient or excessive charge of refrigerant ● Dirty or bent evaporator fins ● Air leakage from cooling (heater) unit or air duct ● Malfunctioning, switchover function of damper in cooling (heater) unit ● Compressor malfunction	● Check refrigerant pressure ● Clean or repair ● Repair or replace ● Repair or replace ● Check compressor
	Outlet air temperature at center duct is low (Crossing point is in area “B”)	● Insufficient air volume from center duct (Heater blower malfunction) ● Compressor malfunction	● Check blower motor and fan ● Check compressor

If ambient temperature is within 30 – 35°C (86 – 95°F), it is possible to do using next page table for detail diagnosis.

DETAIL DIAGNOSIS TABLE AT AMBIENT TEMPERATURE WITHIN 30 – 35°C (85 – 95°F)

MANIFOLD GAUGE (MPa / kg/cm² / psi)		CONDITION	CAUSE	CORRECTION
Lo	Hi			
0.23 – 0.35 (2.3 – 3.5 33 – 50)	1.4 – 1.75 (14 – 17.5 200 – 249)	Normal condition.	————	————
Negative pressure	0.5 – 0.6 (5 – 6 71.2 – 85.3)	● The low pressure side reads a negative pressure,and the high pressure side reads an extremely low pressure. ● Presence of frost around tubing to and from receiver/dryer and expansion valve.	● Dust particles or water droplets are either stuck or frozen inside expansion valve, preventing the refrigerant from flowing.	● Clean expansion valve. Replace it if it cannot be cleaned. ● Replace receiver/dryer. ● Evacuate the A/C system and recharge with fresh refrigerant.
Normal: 0.23 – 0.35 (2.3 – 3.5 33 – 50) ↕ Abnormal: Negative pressure	Normal: 1.4 – 1.75 (14 – 17.5 200 – 249) ↕ Abnormal: 0.69 – 0.98 (7 – 10 100 – 142)	● During A/C operation, the low pressure side sometimes indicates negative pressure, and sometimes normal pressure. Also high pressure side reading fluctuates between the abnormal and normal pressure.	● Expansion valve is frozen due to moisture in the system, and temporarily shuts off the refrigeration cycle.	● Replace expansion valve. ● Replace receiver/dryer. ● Evacuate A/C system and recharge with fresh refrigerant.
0.05 – 0.15 (0.5 – 1.5 4.2 – 21.3)	0.69 – 0.98 (7 – 10 100 – 142)	● Both low and high pressure sides indicate low readings. ● Continuous air bubbles are visible through sight glass. ● Output air is slightly cold.	● Insufficient refrigerant in system. (Refrigerant leaking)	● Using a gas leak detector, check for leaks and repair as necessary. ● Recharge refrigerant to a specified amount. If the pressure reading is almost 0 when the manifold gauges are attached, check for any leaks, repair them, and evacuate the system.
0.4 – 0.6 (4 – 6 56.9 – 85.3)		● Pressure on low pressure side is high. ● Pressure on high pressure side is low. ● Both pressure becoming equal right after A/C is turned OFF.	● Internal leak in compressor.	● Inspect compressor and repair or replace as necessary.
0.35 – 0.45 (3.5 – 4.5 50 – 64)	1.96 – 2.45 (20 – 25 285 – 355)	● High pressure reading on both low and high pressure sides. ● Air bubbles are not visible even when engine rpm is lowered.	● Overcharged A/C system. ● Faulty condenser cooling operation. ● Faulty condenser fan operation.	● Adjust refrigerant to specified amount. ● Clean condenser. ● Inspect and repair condenser fan.
		● High pressure reading on both low and high pressure sides. ● Low pressure side tubing is not cold when touched. ● Air bubbles are visible through sight glass.	● Presence of air in A/C system. (Improperly evacuated)	● Replace receiver/dryer. ● Inspect quantity of compressor oil and presence of contaminants in oil. ● Evacuate system and recharge with fresh refrigerant.
0.45 – 0.55 (4.5 – 5.5 64 – 78)		● High pressure reading on both low and high pressure sides. ● Large amount of frost or dew on the low pressure side tubing.	● Faulty expansion valve. ● Refrigerant flow is not regulated properly.	● Replace expansion valve.

WIRING CIRCUIT

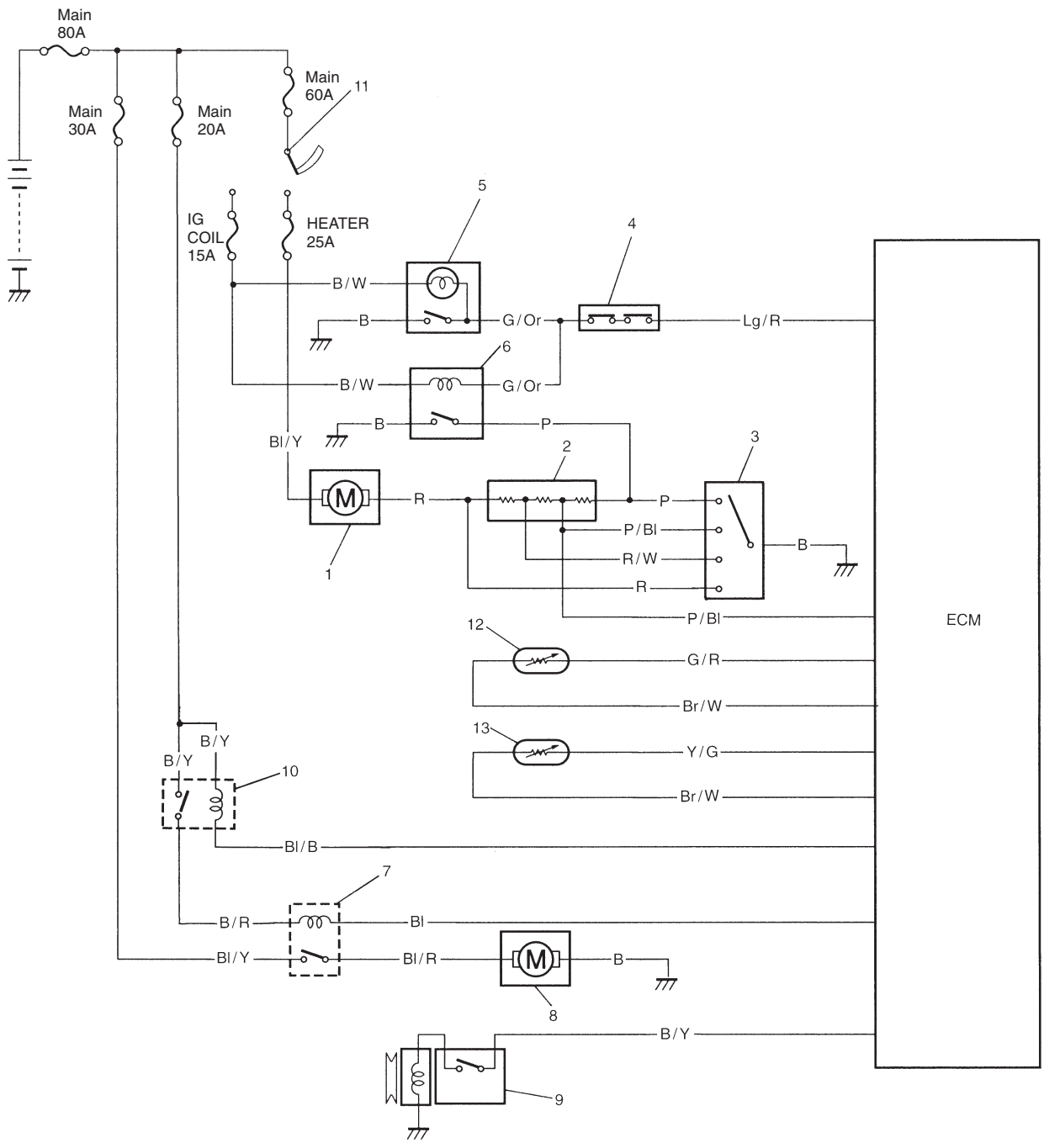

1. Blower motor
2. Blower resistor
3. Blower fan switch
4. Dual pressure switch
5. A/C switch
6. A/C blower motor relay
7. Radiator (and condenser) cooling fan relay
8. Radiator (and condenser) cooling fan motor
9. Compressor
10. Main relay
11. Ignition switch
12. A/C evaporator thermistor
13. ECT sensor

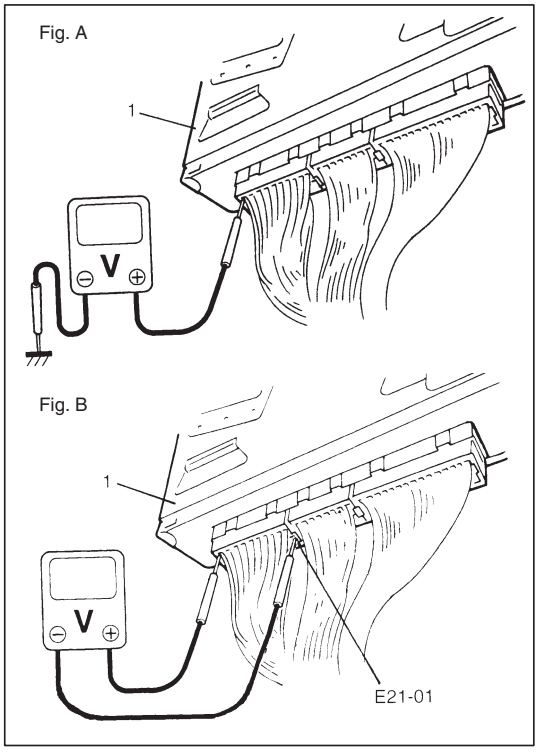

A/C SYSTEM INSPECTION OF ECM AND ITS CIRCUITS

ECM and its Circuits can be checked at ECM wiring couplers by measuring voltage.

CAUTION:
ECM cannot be checked by itself. It is strictly prohibited to connect voltmeter or ohmmeter to ECM with couplers disconnected from it.

Voltage Check

1) Remove ECM (1) from vehicle.
2) Connect ECM (1) couplers to ECM.
3) Check voltage at each terminal of couplers connected.
   Refer to next page and "Inspection of ECM and its circuit" in ENGINE AND EMISSION CONTROL SYSTEM section.

NOTE:
As each terminal voltage is affected by the battery voltage, confirm that it is 11V or more when ignition switch is ON.

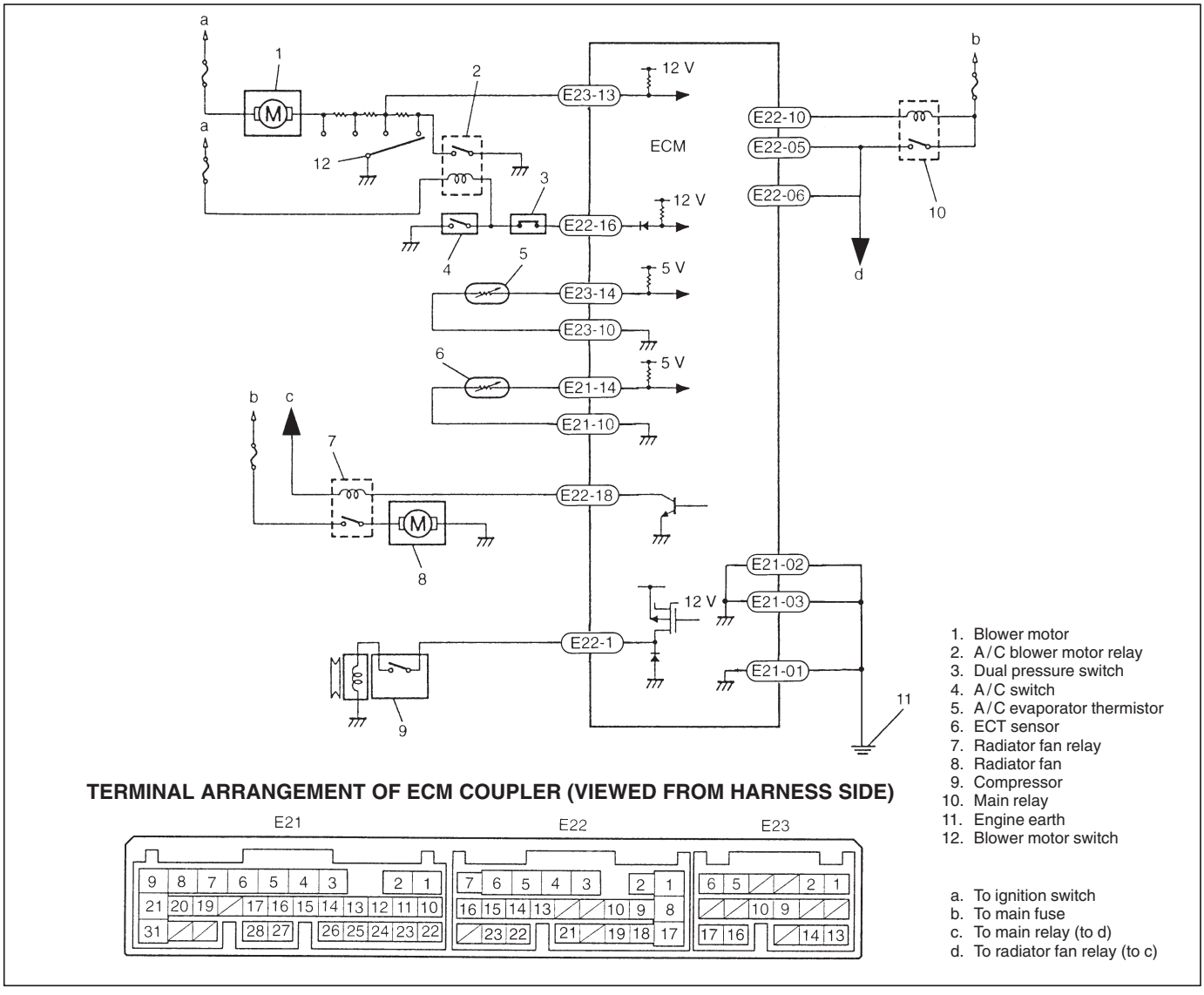

ECM VOLTAGE VALUES TABLE FOR RELATION OF A/C CONTROL

Terminal	Wire	Circuit	Measurement ground	Normal value	Condition
E21-01	B	ECM ground for sensor circuit (E21-10, E23-10)	Ground to body (Fig A)	–0.5 – 0 volt	Ignition switch ON
E21-02	B/Y	ECM ground for power circuit	Ground to body (Fig A)	–0.5 – 0 volt	Ignition switch ON
E21-03	B/Y	ECM ground for power circuit	Ground to body (Fig A)	–0.5 – 0 volt	Ignition switch ON
E21-10	Br/W	Sensor ground	Ground to body (Fig A)	–0.5 – 0 volt	Ignition switch ON
E21-14	Y/G	Engine coolant temperature sensor input	Ground to engine (Fig B)	0.71 – 0.76 volts (290 – 320 Ω)	Engine coolant temperature at Approx. 80°C (176°F) with ignition ON
				0.35 – 0.37 volts (136 – 144 Ω)	Engine coolant temperature at Approx. 110°C (230°F) with ignition ON
E22-01	B/Y	Compressor magnet clutch output	Ground to engine (Fig B)	10 – 14 volts	Blower switch and A/C switch ON with engine running
				0 – 1 volt	Except the above-mentioned with engine running
E22-05	B/R	Power supply for engine control	Ground to engine (Fig B)	10 – 14 volts	Ignition switch ON
E22-06	B/R	Power supply for engine control	Ground to engine (Fig B)	10 – 14 volts	Ignition switch ON
E22-10	Bl/B	Main relay	Ground to engine (Fig B)	0 – 1 volt	Ignition switch ON
				10 – 14 volts	Ignition switch OFF
E22-16	Lg/R	A/C switch input	Ground to engine (Fig B)	0 – 1 volt	Blower switch and A/C switch ON with ignition switch ON
				10 – 14 volts	Blower switch or A/C switch OFF with ignition switch ON
E22-18	Bl	Radiator (condenser) cooling fan relay output	Ground to engine (Fig B)	0 – 1 volt	Blower switch and A/C switch ON or engine coolant temp. sensor more than 98°C (208°F) with engine running
				10 – 14 volts	Except the above-mentioned with engine running
E23-10	Br/W	Sensor ground	Ground to body (Fig A)	–0.5 – 0 volt	Ignition switch ON
E23-13	P/Bl	Blower fan speed input	Ground to engine (Fig B)	0 – 2 volt	Blower switch 2nd or 3rd or 4th position with ignition switch ON
				3 – 5 volts	Blower switch 1st position with ignition switch ON
				10 – 14 volts	Blower switch OFF position with ignition switch ON
E23-14	G/R	Evaporator thermistor temp. input	Ground to engine (Fig B)	2.0 – 2.3 volts (1800 – 2200 Ω)	Evaporator thermistor temp. at Approx. 25°C (77°F) with ignition switch ON
				3.5 – 3.6 volts (6300 – 7000 Ω)	Evaporator thermistor temp. at Approx. 0°C (32°F) with ignition switch ON

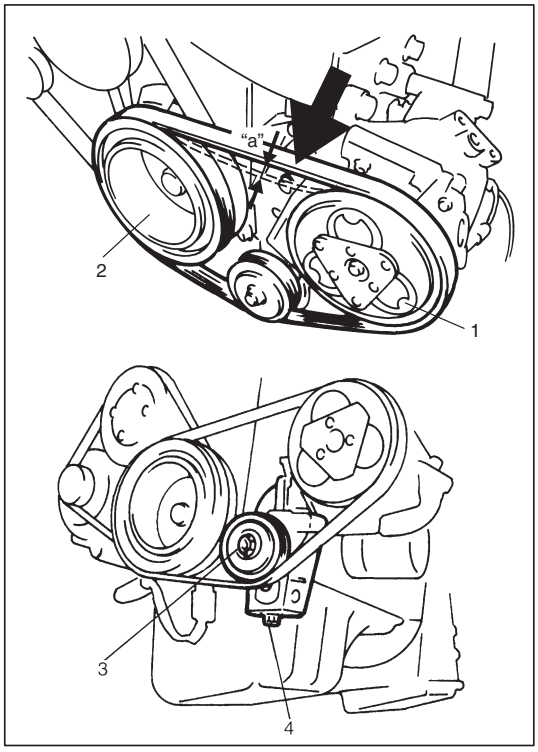

A/C COMPRESSOR DRIVE BELT INSPECTION

1) Check belt for wear and cracks, and replace as required.
2) Check belt tension by measuring how much it deflects when pushed at intermediate point between compressor pulley (1) and crankshaft pulley (2) with about 100 N (10 kg, 22 lbs) force.

   "a" : 7 – 9 mm (0.27 – 0.35 in.) as deflection/ 100N (10 kg, 22 lbs)

   If belt tension is without above specification, adjust belt tension by according to following items.
   i) Loosen tension pulley bolt (3).
   ii) Adjust belt tension by tighten or loosen tension pulley adjust bolt (4).
   iii) Tighten tension pulley bolt (3).
   iv) Turn the crank pulley one revolution, then check belt tension.

RECOVERY, EVACUATION AND CHARGING

OPERATION PROCEDURE FOR CHARGING A/C WITH REFRIGERANT

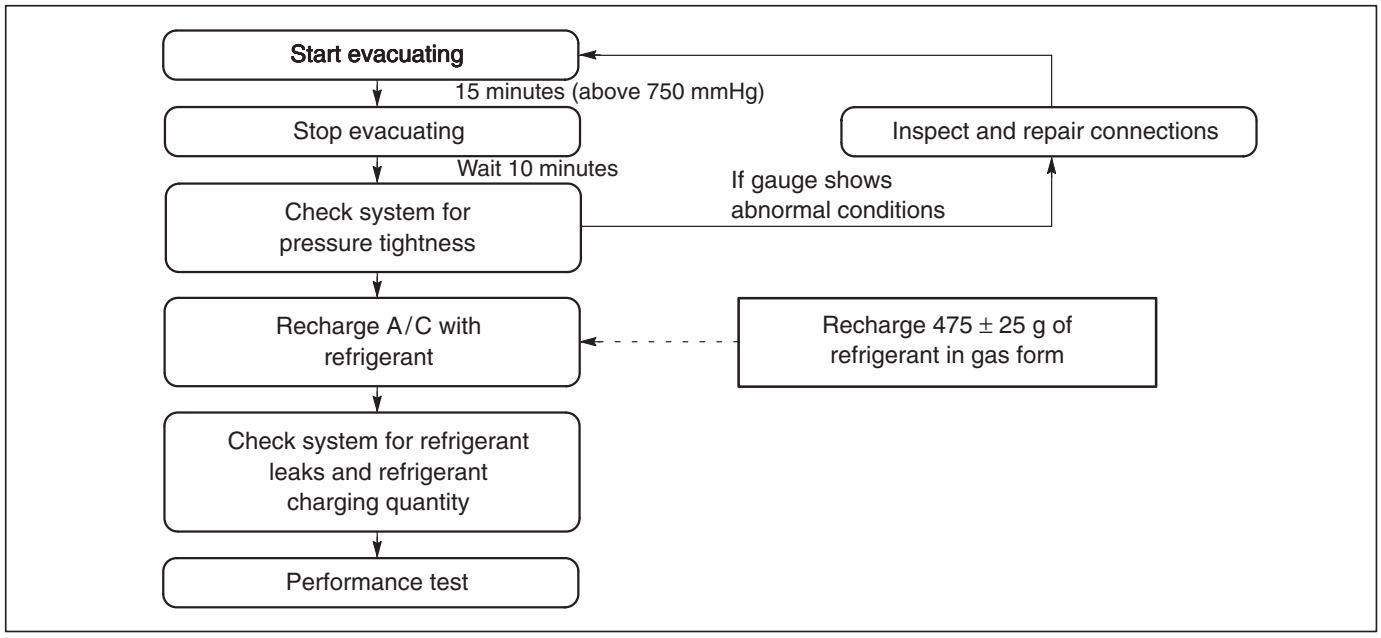

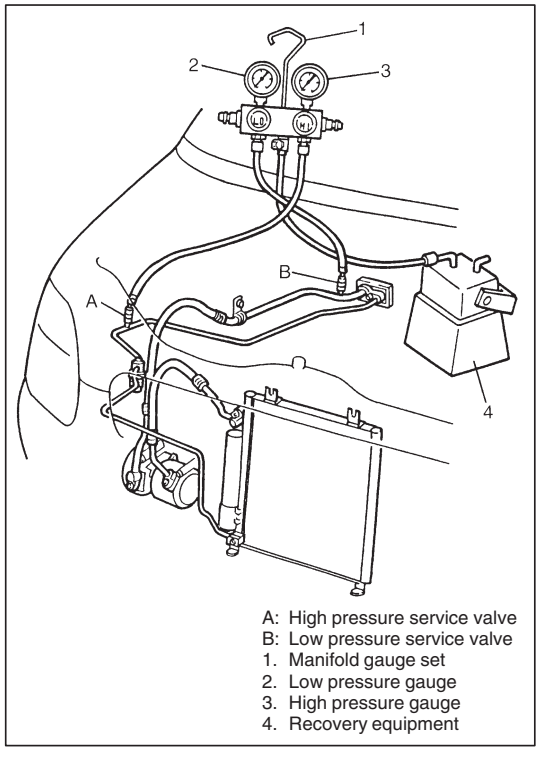

REFRIGERANT RECOVERY

When discharging refrigerant out of A/C system, always recover it by using refrigerant recovery and recycling equipment.
Discharging it into atmosphere would cause adverse effect to environments.

NOTE:
When handling recovery and recycling equipment, be sure to follow the instruction manual for the equipment.

EVACUATING AND CHARGING

Refer to AIR CONDITIONING BASIC MANUAL (99520-02130).

NOTE:
Specified amount of refrigerant: 475 ± 25 g

ON-VEHICLE SERVICE

NOTE:
When refrigerant line must be disconnected and connected to remove and reinstall any component of A/C system, be sure to observe the following instructions.

- **When disconnecting any line from the system, install a blinding plug or cap to fitting of such line immediately.**
- **When connecting hoses and pipes to each other respectively, previously apply a few drops of compressor oil (refrigerating oil) to O-ring.**

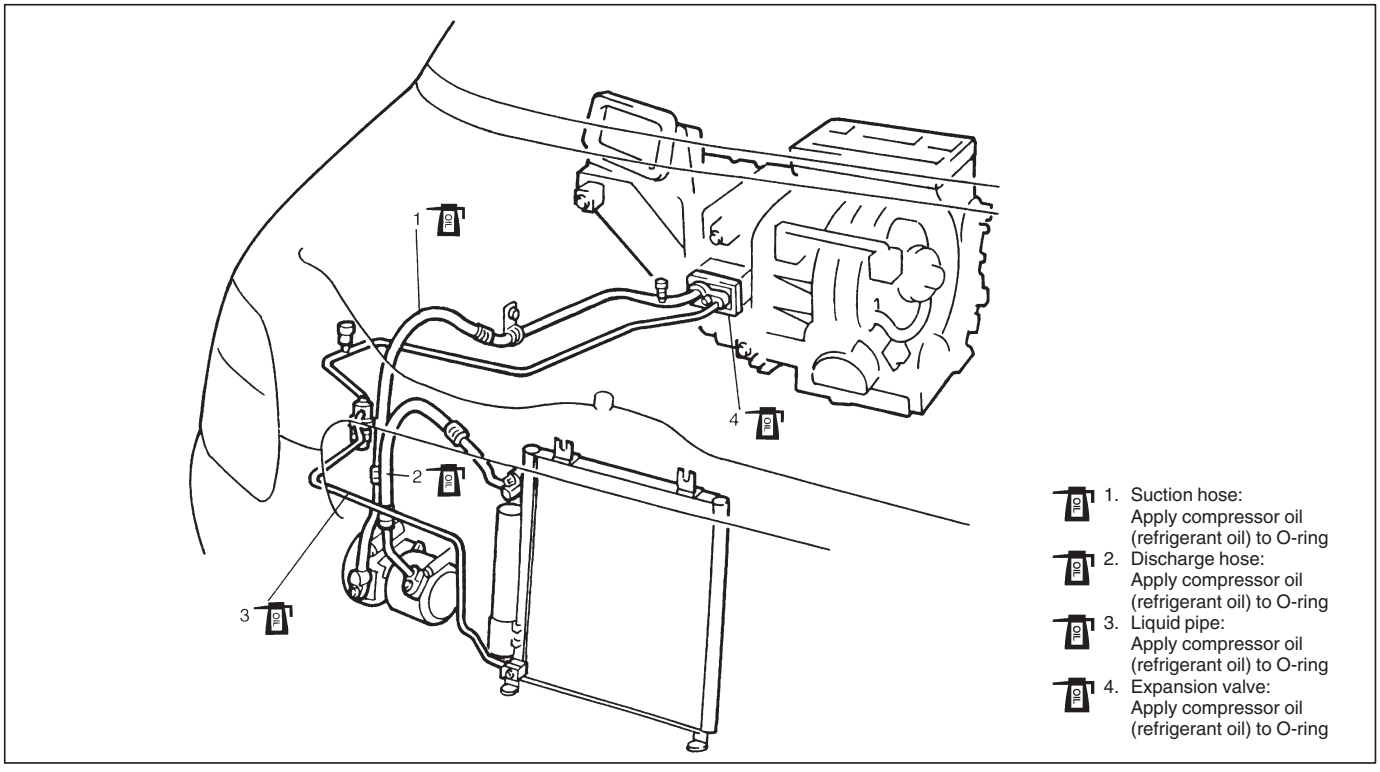

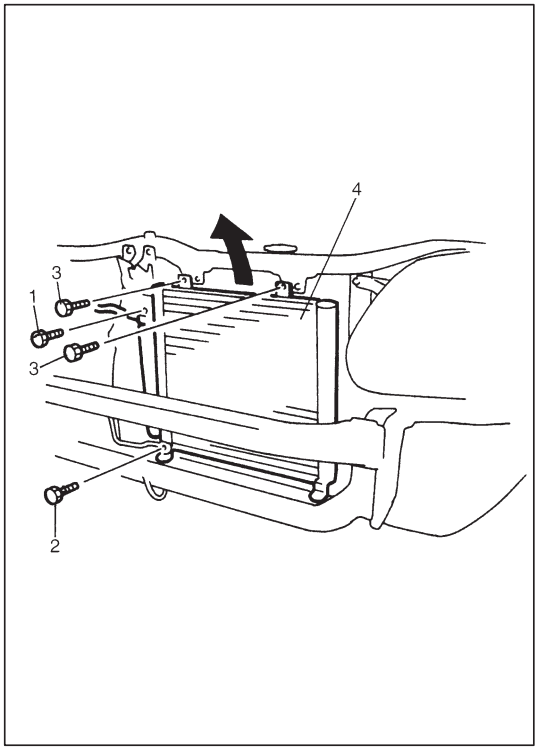

A/C CONDENSER ASSEMBLY

REMOVAL

1) Disconnect negative (–) cable at battery.
2) Recover refrigerant from refrigeration system by using recovery and recycling equipment.
3) Remove front bumper. Refer to FRONT BUMPER in BODY SERVICE Section.
4) Loosen discharge hose bolt (1) and liquid pipe bolt (2).
5) Loosen condenser mounting bolts (3).
6) Remove condenser assembly (4).

INSTALLATION

Reverse removal sequence to install condenser, noting the following point.

- If replace condenser, pour 15 cc of refrigerating oil to compressor suction-side.
- Evacuate and charge system according to previously described procedure.

INSPECTION

Check the following.

- Condenser fins for leakage, blockage and damage
- Condenser fittings for leakage

Clogged condenser fins should be washed with water, and should be dried with compressed air.

NOTE:

Be careful not to damage condenser fins. If condenser fin is bent, straighten it by using a screwdriver or pair of pliers. If any leakage is found from fitting or tube, repair or replace condenser.

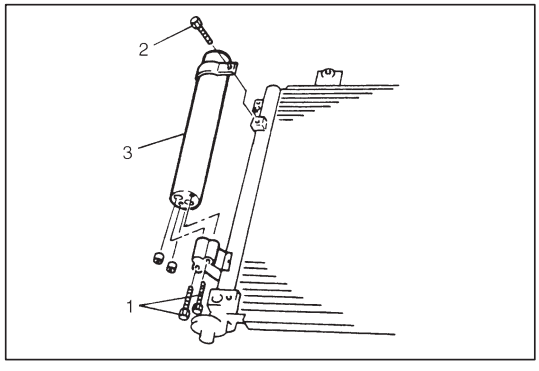

RECEIVER/DRYER

REMOVAL

1) Recover refrigerant from refrigeration system by using recovery and recycling equipment.
2) Remove A/C condenser assembly. Refer to A/C condenser assembly in this section.
3) Loosen receiver/dryer attachment bolts (1), (2).
4) Remove receiver/dryer (3).

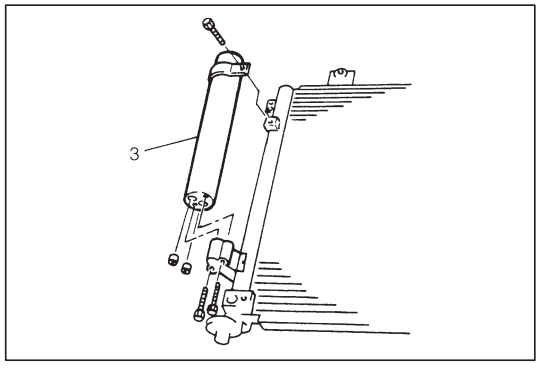

INSTALLATION

Reverse removal sequence to install receiver/dryer noting the following points.

- If receiver/dryer (3) is replaced, pour 20 cc of refrigerating oil to compressor suction-side.
- Evacuate and charge system according to previously described procedure.

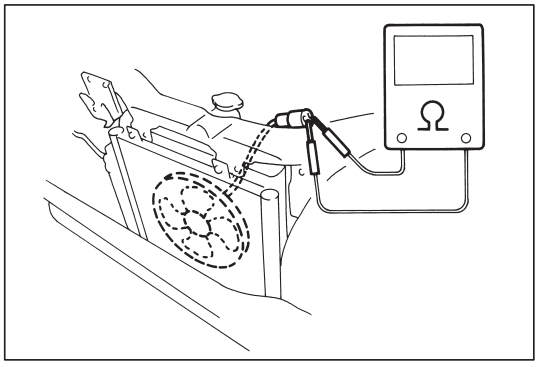

RADIATOR (AND CONDENSER) COOLING FAN MOTOR

INSPECTION

1) Check continuity between each two terminals.
   If there is no continuity, replace radiator (and condenser) cooling fan motor.

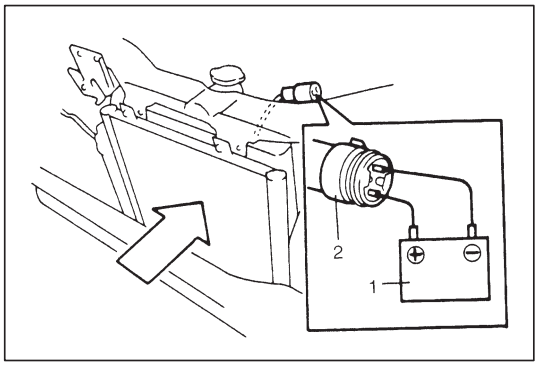

2) Connect battery (1) to radiator (and condenser) cooling fan motor coupler (2) as shown in figure, then check that the radiator (and condenser) cooling fan motor operates smoothly.
   If radiator (and condenser) cooling fan motor does not operates smoothly, replace motor.

   Reference current data: Approx. 8.5 – 11.5 A at 12 V

COOLING UNIT (EVAPORATOR)

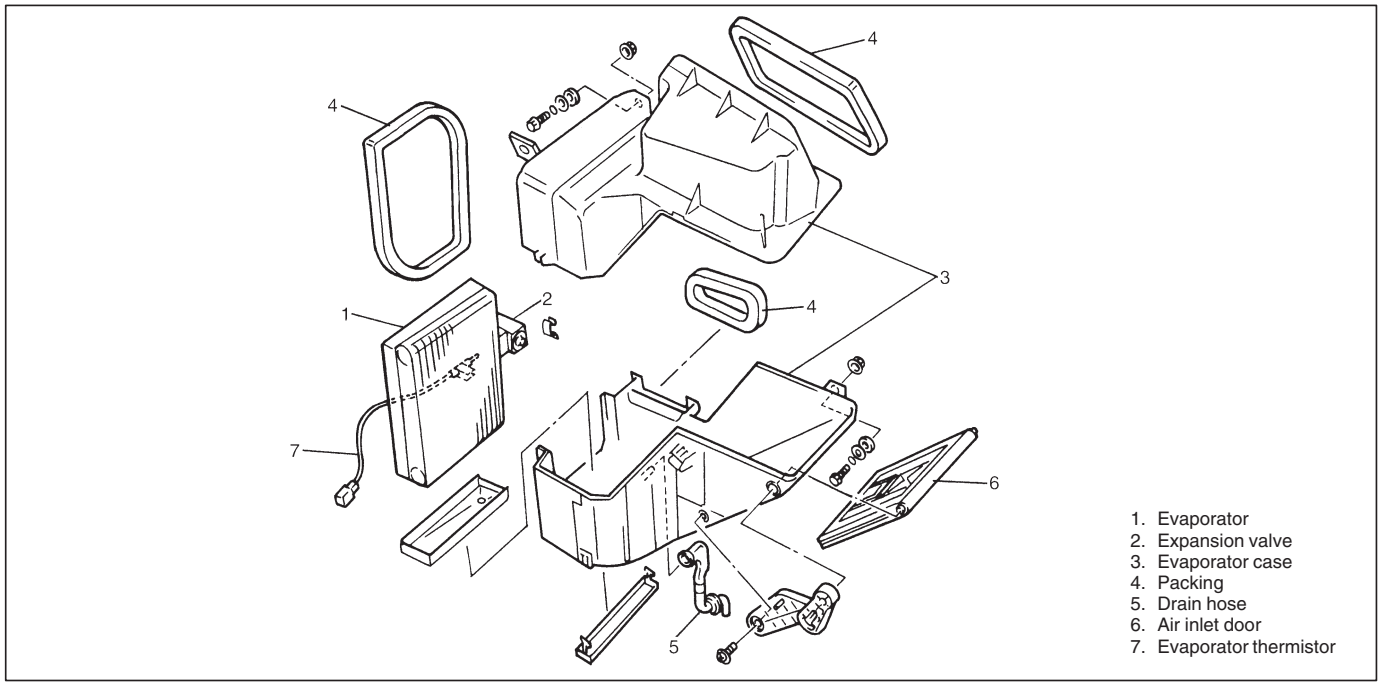

1. Evaporator
2. Expansion valve
3. Evaporator case
4. Packing
5. Drain hose
6. Air inlet door
7. Evaporator thermistor

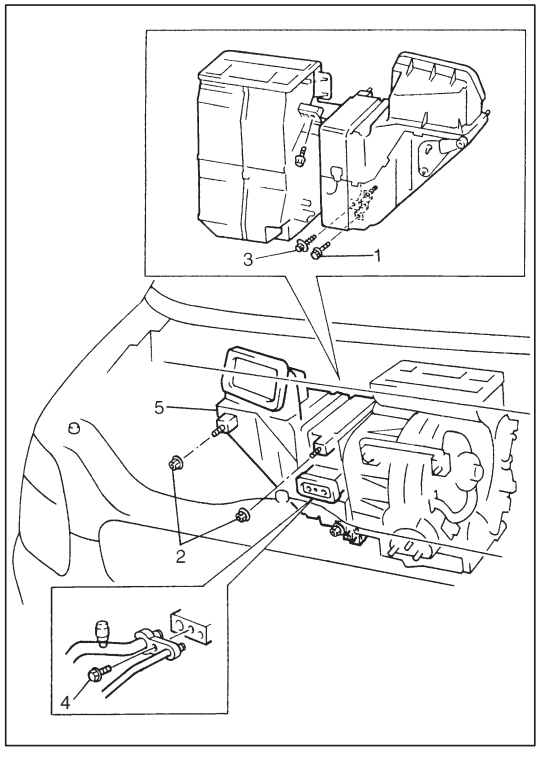

REMOVAL

1) Disconnect negative (–) cable at battery.
2) Recover refrigerant from refrigeration system by using recovery and recycling equipment.
3) Disable air bag system, if equipped.
4) Remove heater control cable, main harness clamp.
5) Loosen suction hose & liquid pipe bolt (4).
6) Loosen cooling unit bolt (1), nuts (2) and screw (3) as shown in figure.
7) Remove cooling unit (5).

INSPECTION

Check the following

- Evaporator fins for leakage, blockage and damage.
- Evaporator fitting for leakage.

Clogged evaporator fins should be washed with water, and should be dried with compressor air.

NOTE:

Be careful not to damage evaporator fins. If evaporator fin is bent, straighten it by using a screwdriver or pair of pliers.
If any leakage is found from fitting or tube, repair or replace evaporator.

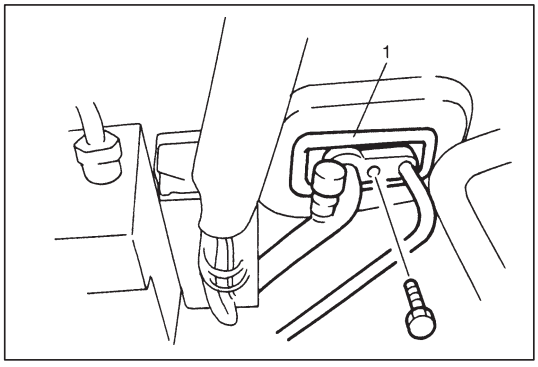

INSTALLATION

Reverse removal sequence to install cooling unit, noting the following points.

- If cooling unit or evaporator is replaced, pour 25 cc of refrigerating oil to compressor suction-side.
- Install uniformly the padding (1) to installation hole.

- Evacuate and charge system according to previously described procedure.
- Adjust heater control cable, refer to HEATER CONTROL LEVER ASSEMBLY in HEATER AND VENTILATION section.
- Enable air bag system, if equipped.

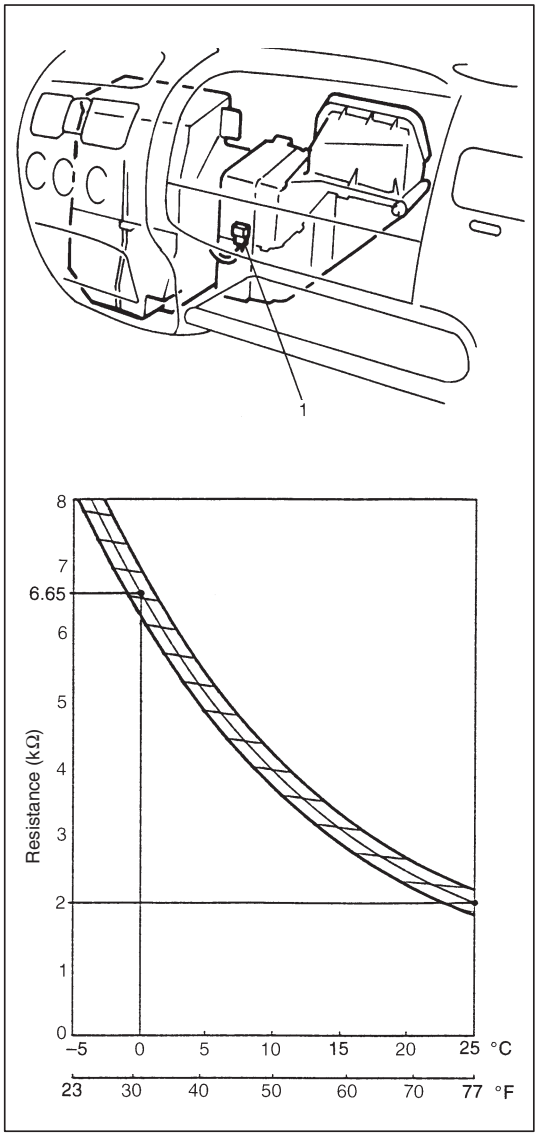

A/C EVAPORATOR THERMISTOR

Check resistance between evaporator thermistor (1) terminals.

Sensor Temperature (°C (°F))	Resistance (kΩ)
0 (32)	6.3 – 7.0
25 (77)	1.8 – 2.2

If check results are as not specified, replace evaporator thermistor.

NOTE:

When the evaporator thermistor removed, its should be reinstalled in original position.

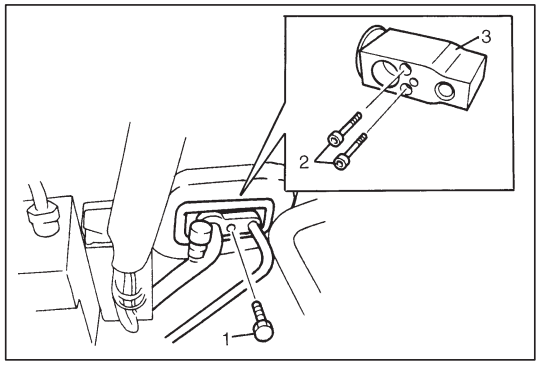

EXPANSION VALVE

INSPECTION

Refer to “Troubleshooting Procedure Using Manifold Gauge Set” earlier in this section for inspection.

REMOVAL

1) Recover refrigerant from refrigeration system by using recovery and recycling equipment.
2) Loosen liquid pipe mounting bolt (1).
3) Loosen expansion attaching bolts (2) and remove expansion valve (3).

INSTALLATION

Reverse removal procedure for installation, noting the following points.

- Apply compressor oil to expansion valve O-ring and connecting hose and pipe O-ring.
- Evacuate and charge system according to previously described procedure.

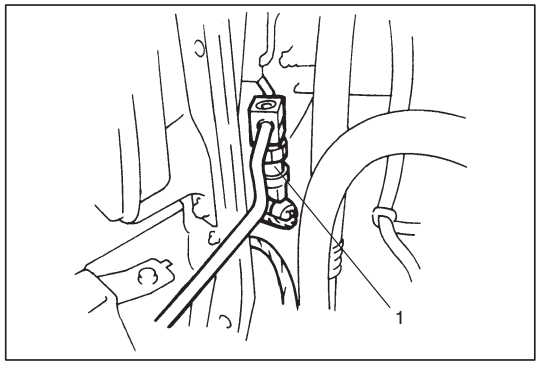

DUAL PRESSURE SWITCH

INSPECTION

1) Check dual pressure switch (1) for continuity at normal temperature (approx. 25°C (77°F)) when A/C system has a proper charge of refrigerant and when A/C system (compressor) is under operation. In each of these cases, switch should show proper continuity.

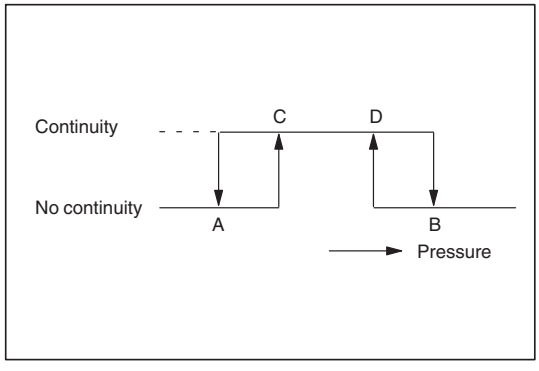

2) Check switch for continuity at specified pressure as shown.

A: Approx 200 KPa (2.0 kg/cm^2)
B: Approx 3200 KPa (32 kg/cm^2)
C: Approx 230 KPa (2.3 kg/cm^2)
D: Approx 2800 KPa (28 kg/cm^2)

REMOVAL

1) Recover refrigerant from refrigeration system by using recovery and recycling equipment.
2) Disconnect negative (–) cable at battery.
3) Remove dual pressure switch.

INSTALLATION

Reverse removal procedure for installation, noting the following points.

- Apply compressor oil to dual pressure switch O-ring.
- Evacuate and charge system according to previously described procedure.

Tightening torque for pressure sensor
11 N·m (1.1 kg-m, 8.0 lb-ft)

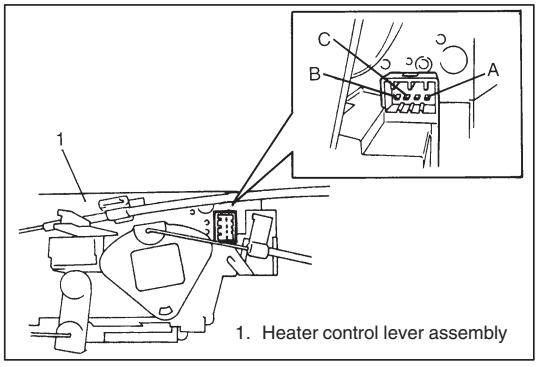

1. Heater control lever assembly

A/C SWITCH

INSPECTION

1) Remove heater control lever assembly, refer to “HEATER CONTROL LEVER ASSEMBLY” in Section 1A.
2) Check following points for A/C switch.
   - Pull A/C Switch nob and check it there is continuity between terminals “A” and “B”.
   - With battery voltage (+) connected to terminal “C” and (–) to terminal “A”, pull A/C Switch nob and check it indicator lamp lights.

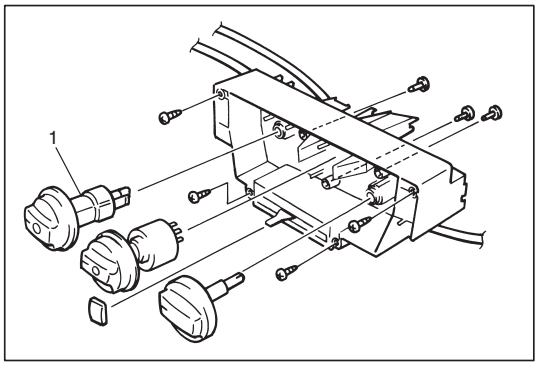

REMOVAL AND INSTALLATION

Refer to “HEATER CONTROL LEVER ASSEMBLY” in Section 1A for A/C Switch (1) removal and installation.

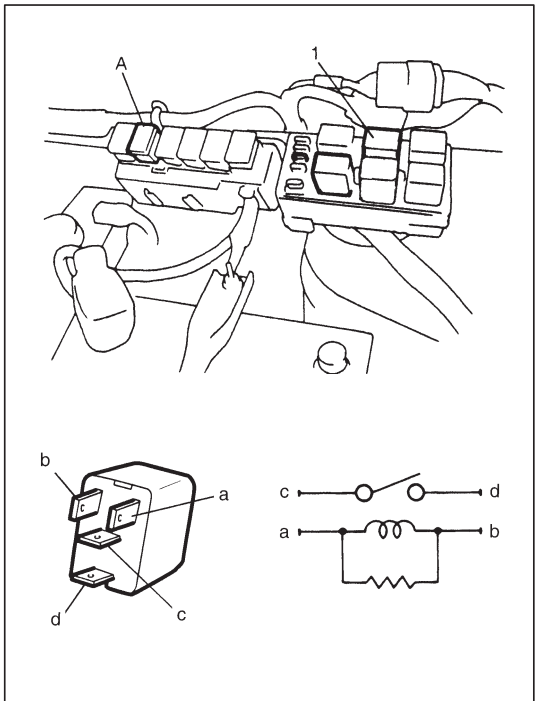

A. Radiator (and condenser) cooling fan fuse

RADIATOR (AND CONDENSER) COOLING FAN RELAY

INSPECTION

1) Disconnect negative cable at battery.
2) Remove radiator cooling fan relay (1) from vehicle.
3) Check that there is no continuity between terminal “c” and “d”.
   If there is continuity, replace relay.
4) Connect battery positive (+) terminal to terminal “b” of relay.
   Connect battery negative (–) terminal “a” of relay.
   Check continuity between terminal “c” and “d”.
   If there is no continuity when relay is connected to the battery, replace relay.

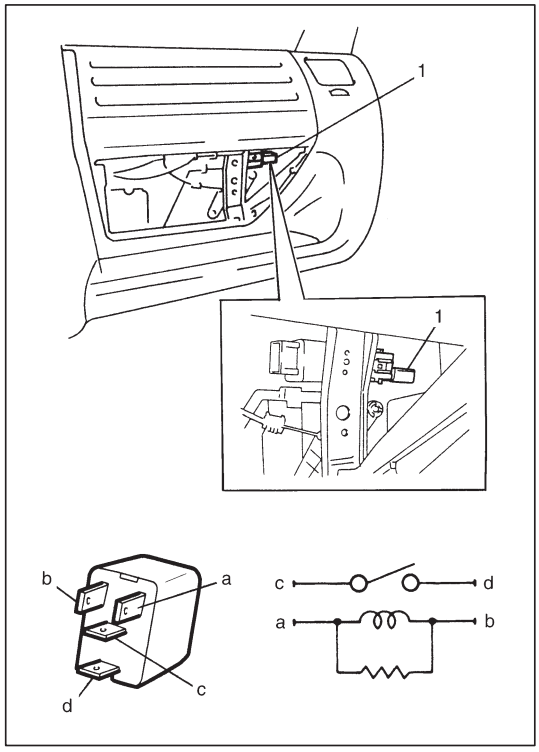

A/C BLOWER FAN RELAY

INSPECTION

1) Disconnect negative cable at battery.
2) Remove A/C blower fan relay (1) from vehicle.
3) Check that there is no continuity between terminal “c” and “d”.
   If there is continuity, replace relay.
4) Connect battery positive (+) terminal to terminal “b” and connect battery negative terminal to terminal “a”.
   Check continuity between terminal “c” and “d”.
   If there is no continuity when relay is connected to the battery, replace relay.

COMPRESSOR

REMOVAL

1) RUN engine at idle speed with air conditioning ON for 10 minutes. After that stop the engine.
2) Disconnect negative (–) cable at battery.
3) Recover refrigerant from refrigeration system by using recovery and recycling equipment.

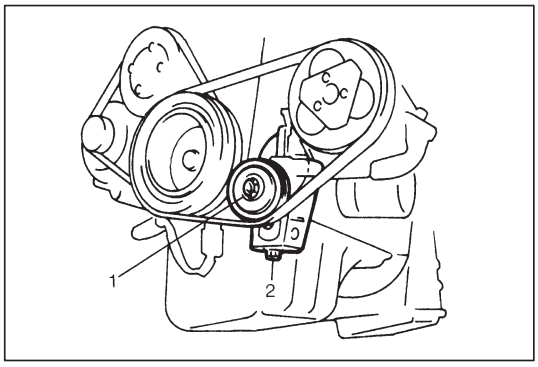

4) Remove front bumper.
5) Remove engine front cover.
6) Disconnect magnet clutch lead wire and undo lead wire clamp.
7) Remove compressor drive belt by loosening tension pulley bolt (1) and adjust bolt (2).

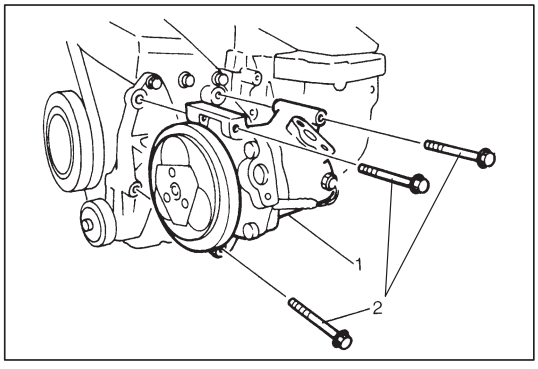

8) Disconnect suction and discharge hoses from compressor.

NOTE
Cap open fittings immediately to keep moisture out of system.

9) Remove compressor with magnet clutch assembly (1) from its mount by loosening mounting bolts (2).
10) If compressor is replaced.
Drain oil from compressor, and measure its amount.

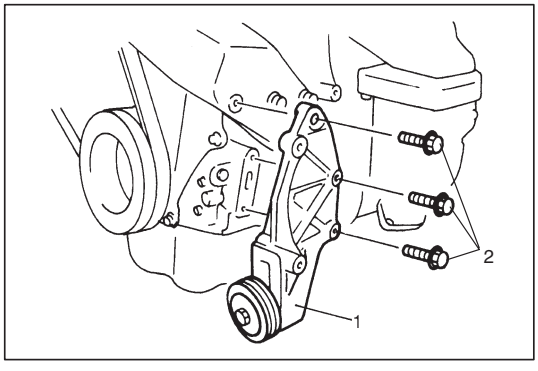

11) Remove compressor mount (1) by loosening mount bolts (2).

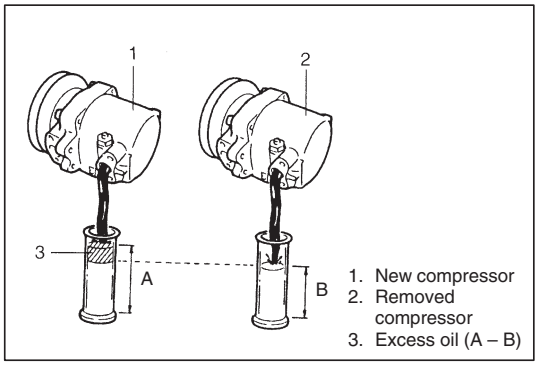

INSTALLATION

Reverse removal procedure noting the following point.

- If compressor is replaced, pour new compressor oil with the same amount as that drained from compressor in REMOVAL.
Refer to “REPLENISHING COMPRESSOR OIL” in this section.
- Evacuate and charge system according to previously described procedure.

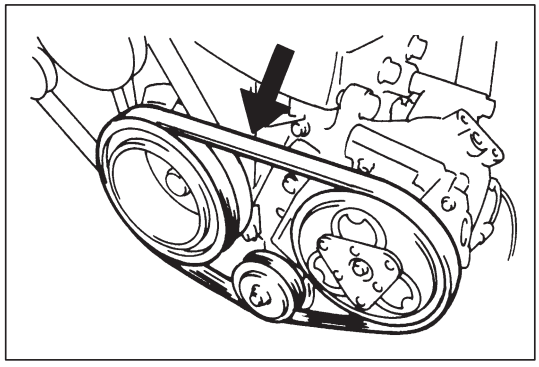

- Adjust drive belt tension. Refer to “DRIVE BELT INSPECTION” in this section.

CAUTION:
Be sure to use HFC-134a (R-134a) compressor oil.

NOTE:
Compressor assembly supplied from factory is filled up with the following amount of oil.
Oil amount in compressor: 120 cm^3 (120 cc, 7.5 in^3)

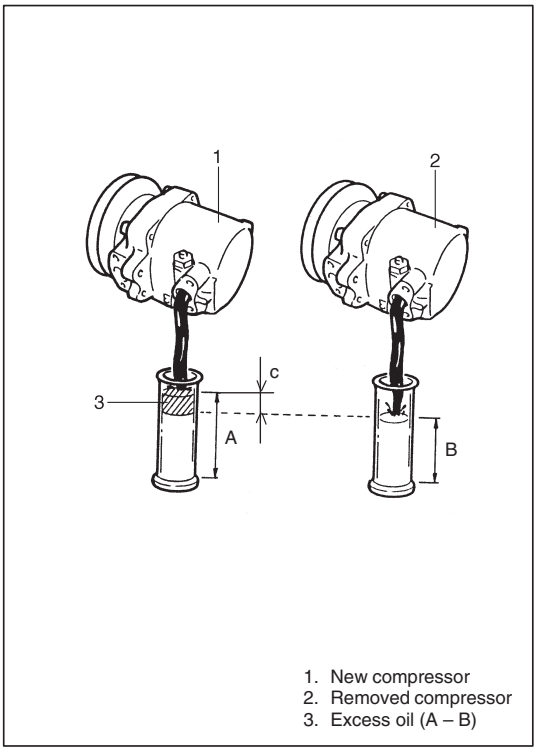

1. New compressor
2. Removed compressor
3. Excess oil (A – B)

REPLENISHING COMPRESSOR OIL

When replacing air conditioning parts with new ones, it is necessary to replenish oil by the amount supposedly remaining in each part.

When changing gas only

When it is unavoidable to change gas without replacing any component part for engine removal and installation or for some other reason, replenish 50 cc oil. When replenishing gas only, oil replenishment is not necessary.

When replacing compressor

Compressor oil is sealed in each new compressor by the amount required for air conditioner cycle. Therefore, when using a new compressor for replacement, drain oil from it by the amount calculated as follows.

“C” = “A” – “B”
“C”: Amount of oil to be drained
“A”: Amount of oil sealed in a new compressor
“B”: Amount of oil remaining in removed compressor

When replacing other part

Part replaced	Amount of compressor oil to be replenished
Evaporator	25 cc
Condenser	15 cc
Receiver/dryer	20 cc
Hoses	10 cc each
Pipes	10 cc each

MAGNET CLUTCH

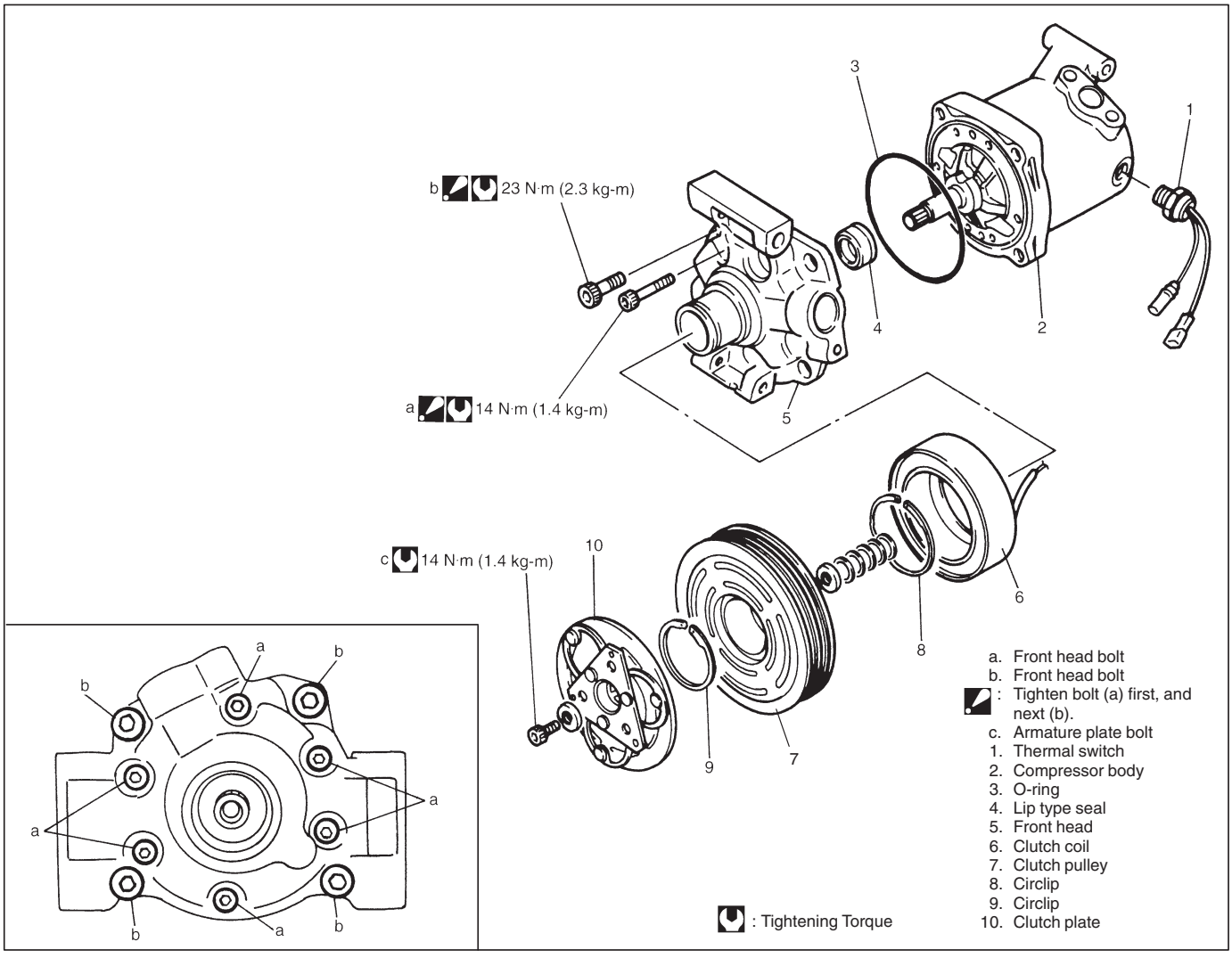

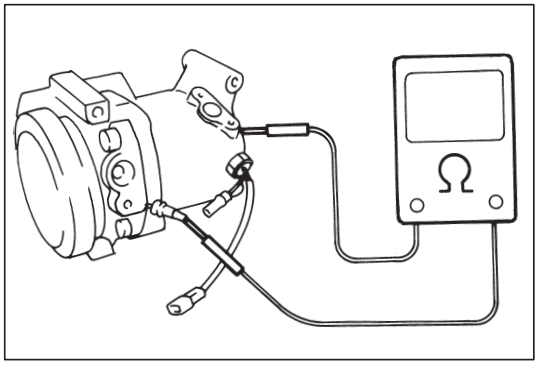

INSPECTION

- Check clutch plate and clutch pulley for wear and oil soaked conditions respectively.
- Check clutch pulley bearing for noise, wear and grease leakage.
- Measure clutch coil for resistance at 20°C.

Standard Resistance: 3.4 – 4.1 Ω

If the measured resistance does not remain within above tolerance, replace magnet clutch assembly.

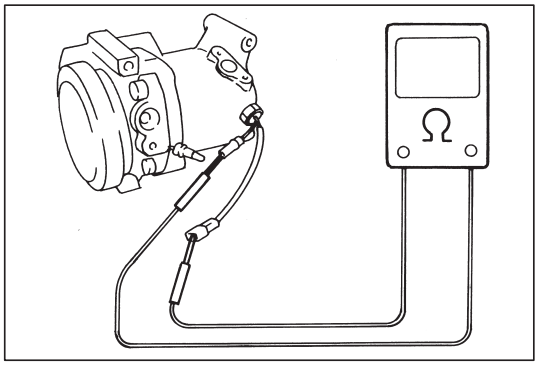

- Use an ohmmeter to check thermal switch for continuity. If it is no continuity, replace it.

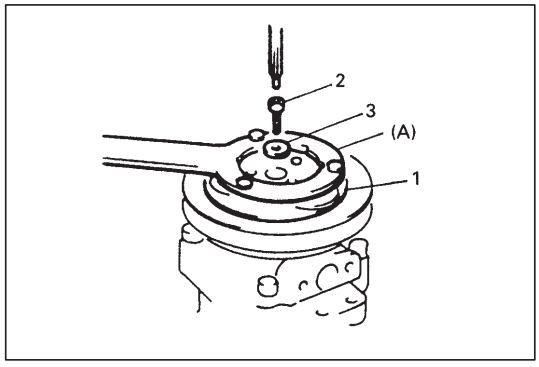

REMOVAL

1) Remove compressor from vehicle. Refer to COMPRESSOR in this section.
2) Fix clutch plate (1) with special tool (A) and remove clutch plate bolt (2) and washer (3).

Special Tool
(A): 09991-06020

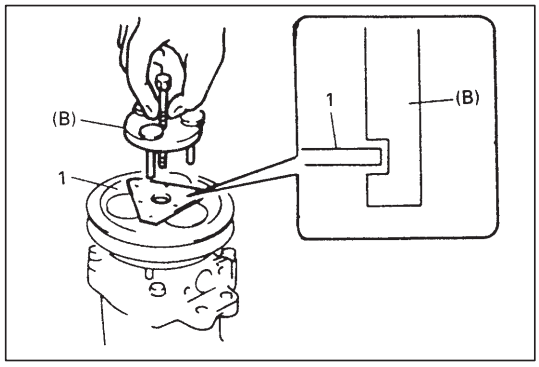

3) Using special tool (B) if necessary, remove clutch plate (1).

Special Tool
(B): 09991-06030

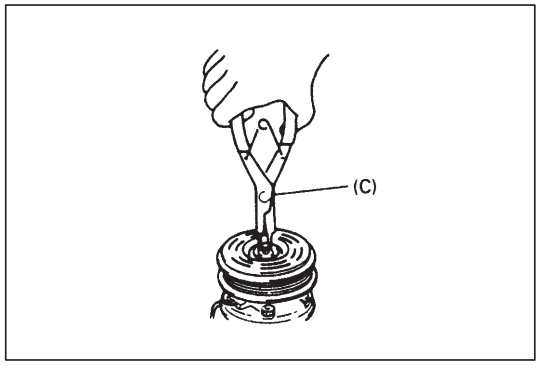

4) Remove shims from shaft.
5) Using special tool (C), remove circlip.

Special Tool
(C): 09900-06107

6) Remove clutch coil read wire clamp by loosening its screw and disconnect clutch coil read wire from thermal switch read wire.

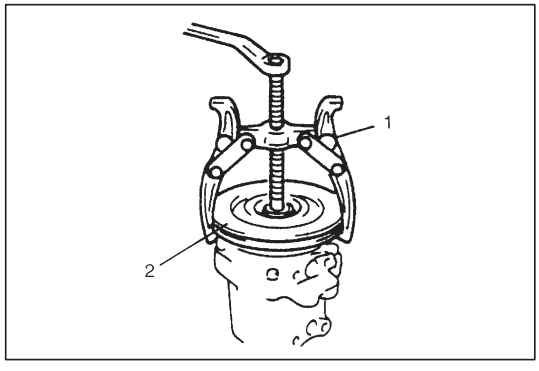

7) Remove clutch pulley (2) with puller (1).

NOTE:
Be careful not to damage pulley when tapping clutch pulley.

8) Remove clutch coil.

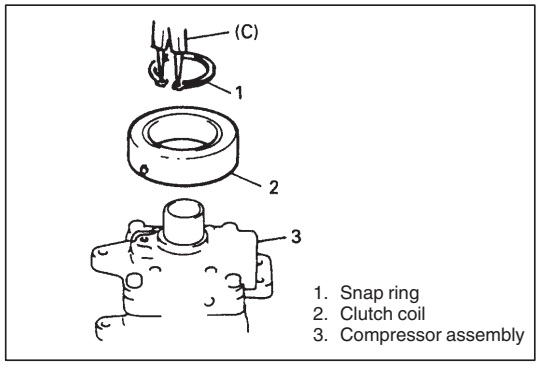

9) Remove circlip (1) by using special tool (C).
10) Remove clutch coil (2) from compressor (3).

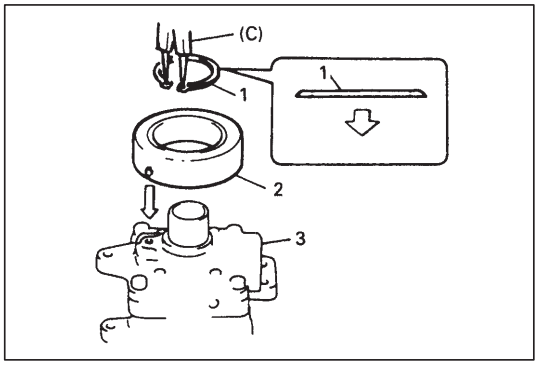

INSTALLATION

1) Install clutch coil (2).
   Protrusion on under side of clutch coil must match hole in compressor (3) to prevent movement and correctly locate lead wire.
2) Using special tool (C), install circlip (1) as shown.

   Special Tool
   (C): 09900-06107

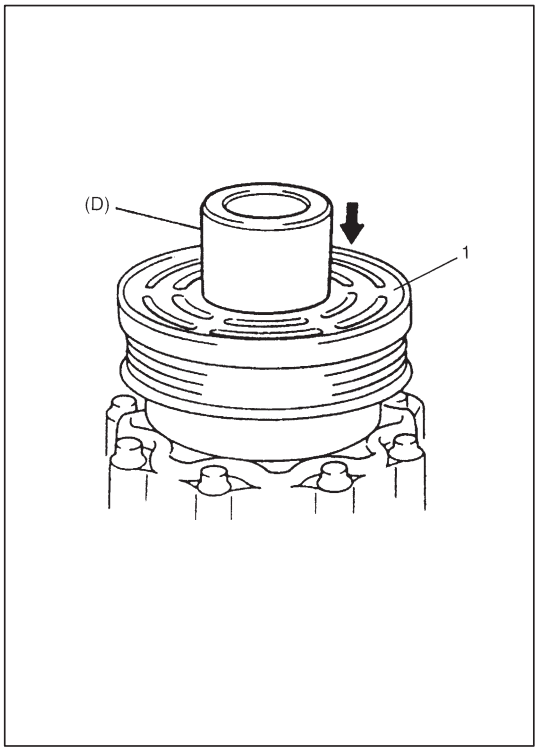

3) Install clutch pulley (1).
   (I) Set clutch pulley (1) squarely over clutch pulley installation boss.
   (II) Place special tool (D) onto clutch coil bearing.
   Ensure that edge rests only on inner race of bearing.
   (III) Install circlip.

   Special Tool
   (D): 09991-06010

   CAUTION:
   Be careful not to scratch bearing seal.

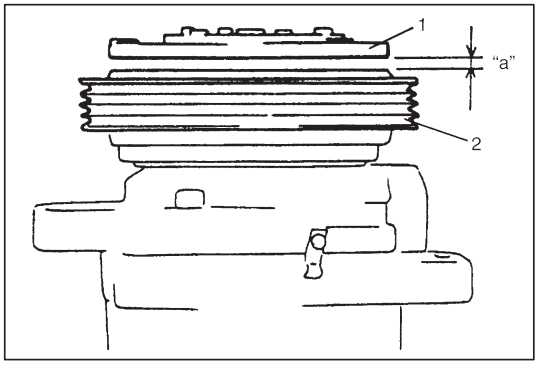

4) Adjust clearance, between clutch plate (1) and clutch pulley (2) by putting shim on compressor shaft.

   Standard clearance "a": 0.3 – 0.6 mm (0.012 – 0.024 in.)

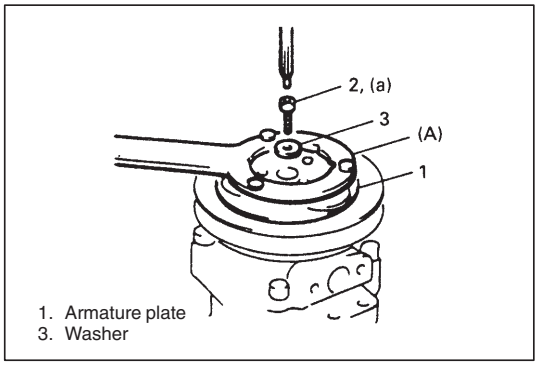

5) Tighten new clutch plate bolt (2) as specified below.

   Tightening Torque
   (a): 14 N·m (1.4 kg-m, 10.5 lb-ft)

   Special Tool
   (A): 09991-06020

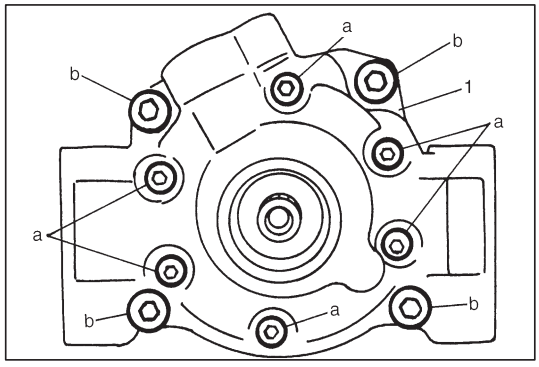

LIP SEAL

REMOVAL

1) Remove magnet clutch, referring to “MAGNET CLUTCH” in this section.
2) Remove front head (1) mounting bolts (a), (b).

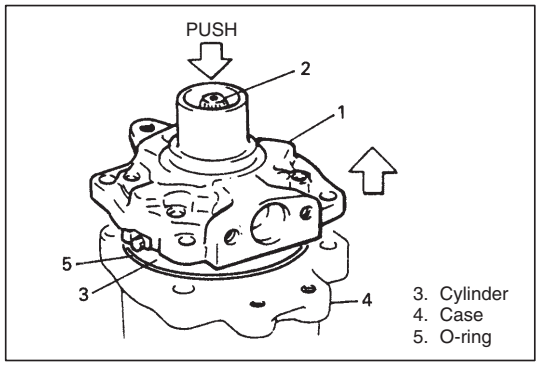

3) Remove front head (1) by pushing cylinder shaft (2).

NOTE:
Be careful not to remove cylinder from front head.

4) Remove O-ring.

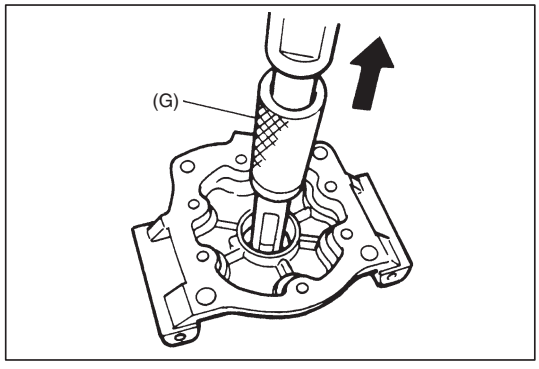

5) Remove lip seal from front head using special tool (G).

Special Tool
(G): 09923-73210

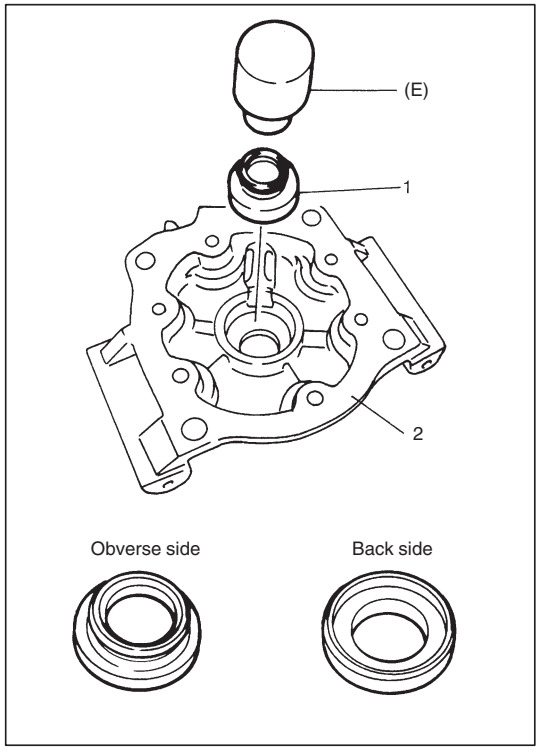

INSTALLATION

1) Press-fit lip seal (1) into front head (2) using special tool (E).

Special Tool
(E): 09991-06050

> **CAUTION:**
> **Do not reuse mechanical seal once removed from compressor.**

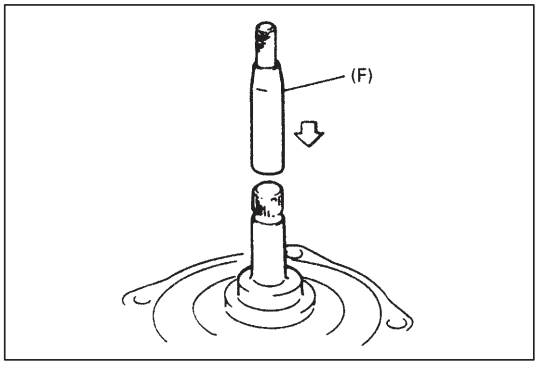

2) Coat special tool (F) surface with oil and place it on the shaft.

Special Tool
(F): 09991-06040

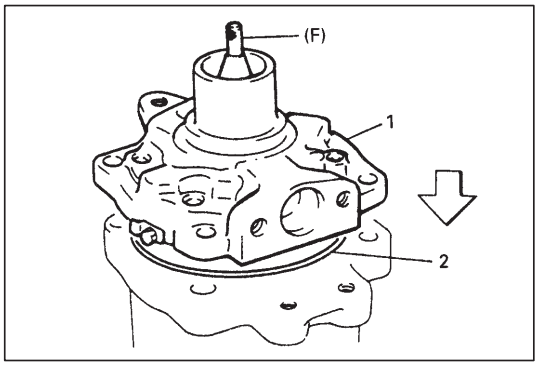

3) Install O-ring (2) to case.
4) Apply compressor oil to lip seal and O-ring.
5) Install front head (1).

Special Tool
(F): 09991-06040

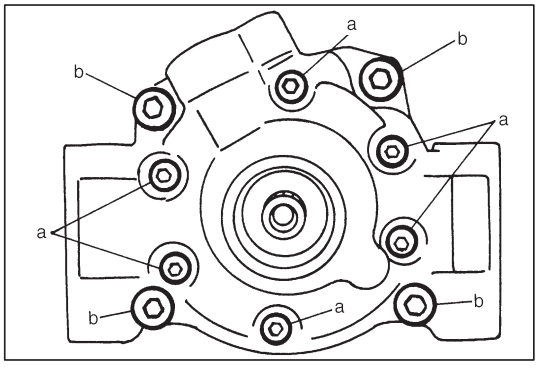

6) Tighten front head mounting bolts (a), (b).

Tightening Torque
(a): 14 N·m (1.4 kg-m, 10.5 lb-ft)
(b): 23 N·m (2.3 kg-m, 17.0 lb-ft)

NOTE:
- **Be sure to use new front head mounting bolts.**
- **Tighten bolt (a) first, and next (b).**

REQUIRED SERVICE MATERIALS

MATERIALS	RECOMMENDED SUZUKI PRODUCT	USE
Compressor oil (Refrigerant oil)	COMPRESSOR OIL RS20 (150 cc) 99000-99088	● O-ring ● Each Component
Refrigerant	REFRIGERANT DRUM (200 g) 95794-50G00	● Refrigerant charge

SPECIAL TOOLS

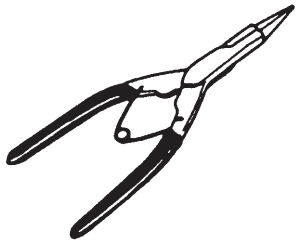 09900-06107 Snap ring pliers (Opening type)	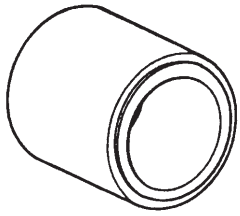 09900-06010 Magnet clutch pulley installer	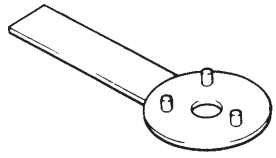 09991-06020 Armature plate spanner	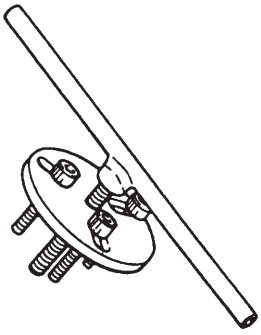 09991-06030 Armature plate remover
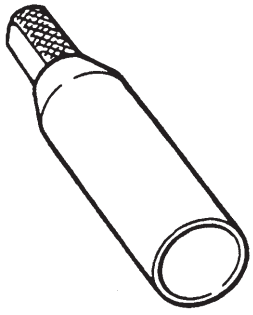 09991-06040 Lip type seal protector	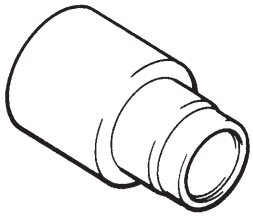 09991-06050 Lip type seal installer	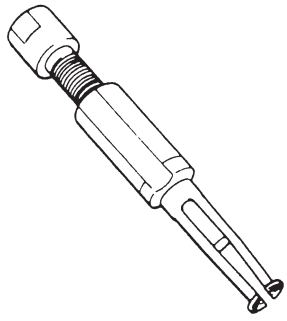 09923-73210 Bearing remover	

SECTION 3

STEERING, SUSPENSION, WHEELS AND TIRES

CONTENTS

DIAGNOSIS

GENERAL DIAGNOSIS

Since the problems in steering, suspension, wheels and tires involve several systems, they must all be considered when diagnosing a complaint. To avoid using the wrong symptom, always road test the vehicle first. Proceed with the following preliminary inspection and correct any defects which are found.

1) Inspect tires for proper pressure and uneven wear.
2) Raise vehicle on a hoist and inspect front and rear suspension and rack and pinion for loose or damaged parts.
3) Spin front wheels. Inspect for out-of-round tires, out-of-balance tires, bent rims, loosen and/or rough wheel bearings.

GENERAL DIAGNOSIS TABLE		
Condition	**Possible Cause**	**Reference Item**
Vehicle Pulls (Leads)	● Mismatched or uneven tires	Replacement tires in Section 3F
	● Tires not adequately inflated	Inflation of tires in Section 3F
	● Broken or sagging springs	Strut damper assembly in Section 3D or coil spring in Section 3E
	● Radial tire lateral force	Replacement tires in Section 3F
	● Disturbed front end alignment	Section 3A
	● Disturbed rear wheel alignment	Check and adjust rear wheel alignment
	● Brake dragging in one road wheel	Refer to Section 5
	● Loose, bent or broken front or rear suspension parts	Tighten or replace suspension parts
Abnormal or Excessive Tire Wear	● Broken or sagging spring	Strut damper assembly in Section 3D or coil spring in Section 3E
	● Tire out of balance	General balance procedure or replacement tires in Section 3F
	● Disturbed front or rear end alignment	Section 3A
	● Faulty strut (shock absorber)	Strut damper assembly in Section 3D
	● Hard driving	Replacement tires in Section 3F
	● Overloaded vehicle	Replacement tires in Section 3F
	● Not rotating tire	Replacement tires or tire rotation in Section 3F
	● Worn or loose road wheel bearing	Knuckle/bearing in Section 3D
	● Wobbly wheel or tire	Replacement wheels or tires in Section 3F
	● Tires not adequately inflated	Inflation of tires in Section 3F
Wheel Tramp	● Blister or bump on tire	Replacement tires in Section 3F
	● Improper strut (shock absorber) action	Strut damper assembly in Section 3D

Condition	Possible Cause	Reference Item
Shimmy, Shake or Vibration	● Tire or wheel out of balance	Balance wheels or general balance procedure in Section 3F
	● Loosen wheel bearings	Knuckle/Bearing in Section 3D and/or wheel bearing and wheel stud in Section 3E
	● Worn tie rod ends	Tie rod end in Section 3B
	● Worn lower ball joints	Suspension arm/bushing in Section 3D
	● Excessive wheel runout	Replacement wheels or tires in Section 3F
	● Blister or bump on tire	Replacement tires in Section 3F
	● Excessively loaded radial runout of tire/wheel assembly	Replacement wheels or tires in Section 3F
	● Disturbed front end alignment	Section 3A
	● Loose or worn steering linkage	Section 3B and 3C
	● Loose steering gear case bolts	Manual rack and pinion assembly in Section 3B
Hard Steering	● Tire not adequately inflated	Inflation of tires in Section 3F
	● Malfunctioning Electrical power steering system	Refer to “Diagnosis” in Section 3B1
	● Bind in tie rod end ball studs or lower ball joints	Tie rod end in Section 3B or suspension arm/bushing in Section 3D
	● Disturbed front end alignment	Section 3A
	● Rack and pinion adjustment	Steering rack plunger in Section 3B
	● Bind in steering column	Steering column in Section 3C
Too Much Play in Steering	● Wheel bearings worn	Knuckle/Bearing in Section 3D
	● Loose steering gear case bolts	Manual rack and pinion assembly in Section 3B
	● Rack and pinion adjustments (Manual steering only)	Section 3B
	● Worn steering shaft joints	Steering lower shaft joint in Section 3C
	● Worn tie rod ends or tie rod inside ball joints	Tie rod end or rack boot/tie rod in Section 3B
	● Worn lower ball joints	Suspension arm/bushing in Section 3D
Poor Returnability	● Bind in tie rod end ball studs	Tie rod end in Section 3B
	● Bind in ball joints	Rack boot/tie rod, tie rod end in Section 3B and suspension arm/bushing in Section 3D
	● Bind in steering column	Steering column in Section 3C
	● Poorly lubricated rack and pinion	Steering pinion or steering rack in Section 3B
	● Disturbed front end alignment	Section 3A
	● Rack and pinion adjustment	Steering rack plunger in Section 3B
	● Tires not adequately inflated	Inflation of tires in Section 3F

Condition	Possible Cause	Reference Item
Rack and Pinion Noise (Rattle or Chuckle)	● Loose steering gear case bolts	Manual rack and pinion assembly in Section 3B
	● Worn rack bush	Rack bushing in Section 3B
	● Rack and pinion adjustment	Steering rack plunger in Section 3B
Abnormal Noise, Front End	● Worn, sticky or loose tie rod ends, lower ball joints, tie rod inside ball joints or drive shaft joints	Rack boot/tie rod, tie rod end in Section 3B, suspension arm in Section 3D or drive shaft in Section 4
	● Damaged struts or mountings	Strut damper assembly in Section 3D
	● Worn suspension arm bushings	Suspension arm/bushing in Section 3D
	● Loose or worn stabilizer bar mountings	Stabilizer bar and/or bushings
	● Loose wheel nuts	Section 3F
	● Loose suspension bolts or nuts	Section 3D or 3E
	● Broken or otherwise damaged wheel bearings	Knuckle/bearing in Section 3D or wheel bearing and wheel stud in Section 3E
	● Broken suspension springs	Strut damper assembly in Section 3D or coil spring in Section 3E
	● Poorly lubricated or worn strut bearings	Strut damper assembly in Section 3D
Wander or Poor Steering Stability	● Mismatched or uneven tires	Replacement tires or inflation tires in Section 3F
	● Loosen ball joints and tie rod ends	Suspension arm/bushing in Section 3D and tie rod end in Section 3B
	● Faulty struts or mounting	Strut damper assembly in Section 3D
	● Loose stabilizer bar	Stabilizer bar and/or bushing in Section 3D
	● Broken or sagging springs	Strut damper assembly in Section 3D or coil spring in Section 3E
	● Rack and pinion adjustment	Steering rack plunger in 3B
	● Front end alignment	Section 3A
Erratic Steering When Braking	● Worn wheel bearings	Knuckle/bearing in Section 3D and/or wheel bearing and wheel stud in Section 3E
	● Broken or sagging springs	Strut damper assembly in Section 3D
	● Wheel tires are inflated unequally	Inflation of tire in Section 3F
	● Disturbed front end alignment	Section 3A
	● Brakes not working in unison	Refer to Section 5
	● Leaking wheel cylinder or caliper	Refer to Section 5B or 5C
	● Warped discs	Refer to Section 5B
	● Badly worn brake linings	Refer to Section 5C
	● Drum is out of round in some brakes	Refer to Section 5C
	● Defective wheel cylinders	Refer to Section 5C

Condition	Possible Cause	Reference Item
Low or Uneven Trim Height Right-to-left trim height (H) difference should be within 10 mm (0.4 in.) with curb weight. 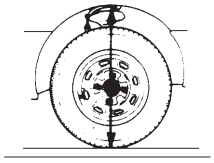 ***Same with rear side.**	● Broken or sagging springs ● Over loaded ● Incorrect springs	Strut damper assembly in Section 3D or coil spring in Section 3E Check loading Strut damper assembly in Section 3D or coil spring in Section 3E
Ride Too Soft	● Faulty struts (shock absorber)	Strut damper assembly in Section 3D
Suspension Bottoms	● Overloaded ● Faulty struts (shock absorber) ● Incorrect broken or sagging springs	Check loading Strut damper assembly in Section 3D Strut damper assembly in Section 3D or coil spring in Section 3E
Body Leans or Sways in Corners	● Loose stabilizer bar ● Faulty struts (shock absorbers) or mounting ● Broken or sagging springs ● Overloaded	Stabilizer bar and/or bushing in Section 3D Strut damper assembly in Section 3D Strut damper assembly in Section 3D or coil spring in Section 3E Check loading
Cupped Tires	● Front struts defective ● Worn wheel bearings ● Excessive tire or wheel run-out ● Worn ball joints ● Tire out of balance	Strut damper assembly in Section 3D Knuckle/bearing in Section 3D or wheel bearing and wheel stud in Section 3E Replacement tires in Section 3D Suspension arm/bushing in Section 3D General balance procedures in Section 3F

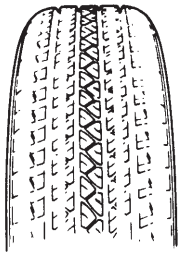

- Hard Cornering
- Under Inflation
- Lack of tire Rotation

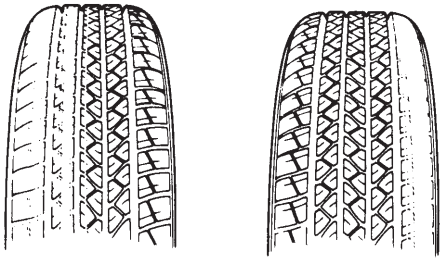

- Incorrect Wheel Alignment
- Tire Construction not Uniform
- Wheel Heavy Acceleration

TIRE DIAGNOSIS

IRREGULAR AND/OR PREMATURE WEAR

Irregular and premature wear has many causes. Some of them are: incorrect inflation pressures, lack of tire rotation, driving habits, improper alignment.

If the following conditions are noted, rotation is necessary:

1) Front tire wear is different from rear.
2) Uneven wear exists across the tread of any tire.
3) Front tire wear is unequal between the right and left.
4) Rear tire wear is unequal between the right and left.
5) There is cupping, flat spotting, etc.

A wheel alignment check is necessary if following conditions are noted:

1) Front tire wear is unequal between the right and left.
2) Wear is uneven across the tread of any front tire.
3) Front tire treads have scuffed appearance with “feather” edges on one side of tread ribs or blocks.

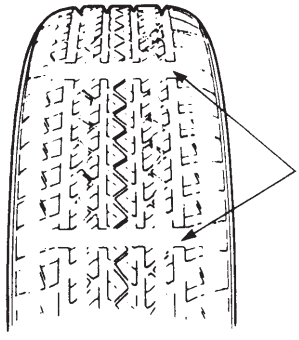

WEAR INDICATORS

Original equipment tires have built-in tread wear indicators to show when they need replacement.

These indicators will appear as 12 mm (0.47 in.) wide bands when the tire tread depth becomes 1.6 mm (0.063 in.).

When the indicators appear in 3 or more grooves at 6 locations, tire replacement is recommended.

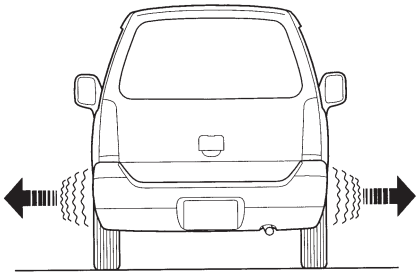

RADIAL TIRE WADDLE

Waddle is side to side movement at the front and/or rear of the vehicle. It is caused by the steel belt not being straight within the tire. It is most noticeable at a low speed, 8 to 48 km/h (5 to 30 mph).

It is possible to locate the faulty tire by road testing the vehicle. If it is on the rear, the rear end of the vehicle shakes from side to side or “waddles”. To the driver in his seat, it feels as though someone is pushing on the side of vehicle.

If the faulty tire is on the front, waddling is more visual. The front sheet metal appears to be moving back and forth and the driver feels as though he is at the pivot point in vehicle.

Waddle can be quickly diagnosed by using Tire Problem Detector (TPD) and following the equipment manufacture’s recommendations.

If TPD is not available, an alternative method of substituting known good tire/wheel assemblies can be used as follows, although it takes a longer time.

1) Ride vehicle to determine whether the front or rear waddles.
2) Install tires and wheels that are known to be good (on similar vehicle) in place of those on waddling end of vehicle. If waddling end cannot be identified, substitute rear ones.
3) Road test again. If improvement is noted, reinstall originals one at a time till waddle causal tire is found. If no improvement is noted, install known good tires in place of all four. Then reinstall originals in the same manner as above.

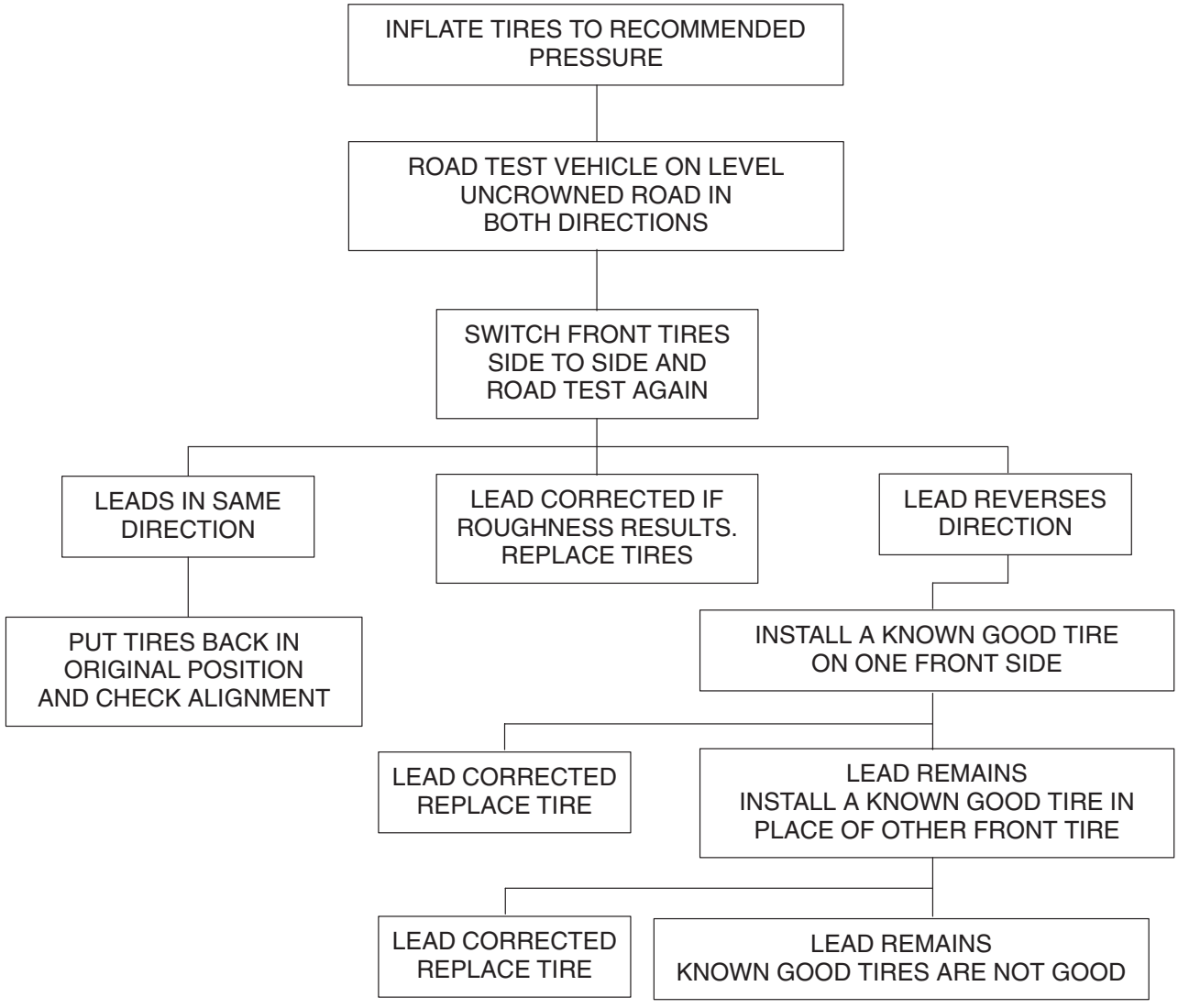

RADIAL TIRE LEAD

"Lead" is the deviation of the vehicle from a straight path on a level rod even with no pressure on the steering wheel. Lead is usually caused by:

1) Incorrect alignment
2) Uneven brake adjustment
3) Tire construction

The way in which a tire is built can produce lead in a vehicle. An example of this is placement of the belt. Off center belts on radial tires can cause the tire to develop a side force while rolling straight down the road. If one side of the tire has a little larger diameter than the other, the tire will tend to roll to one side. This will develop a side force which can produce vehicle lead.

The procedure in above figure (Lead Diagnosis) should be used to make sure that front alignment is not mistaken for tire lead.

1) Part of the lead diagnosis procedure is different from the proper tire rotation pattern currently in the owner and service manuals. If a medium to high mileage tire is moved to the other side of the vehicle, be sure to check that ride roughness has not developed.
2) Rear tires will not cause lead.

VIBRATION DIAGNOSIS

Wheel unbalance causes most of the highway speed vibration problems. If a vibration remains after dynamic balancing, its possible causes are as follows.

1) Tire runout
2) Wheel runout
3) Tire stiffness variation

Measuring tire and/or wheel free runout will uncover only part of the problem. All three causes, known as loaded radial runout, must be checked by using a Tire Problem Detector (TPD). If TPD is not available, alternative method of substituting known good tire and wheel assemblies on the problem vehicle can be used, although it takes a longer time.

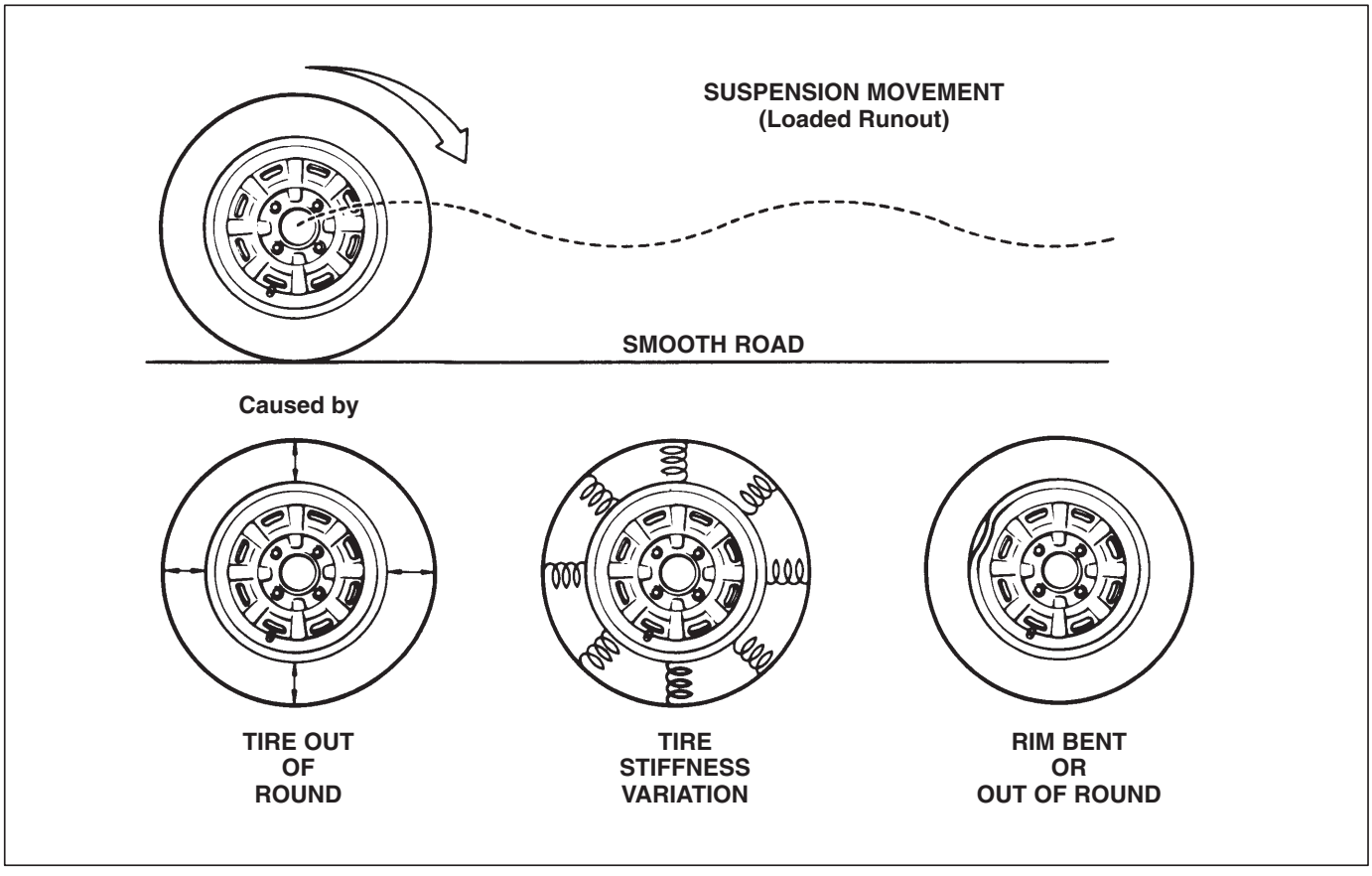

SECTION 3A

FRONT END ALIGNMENT

CONTENTS

3A

GENERAL DESCRIPTION

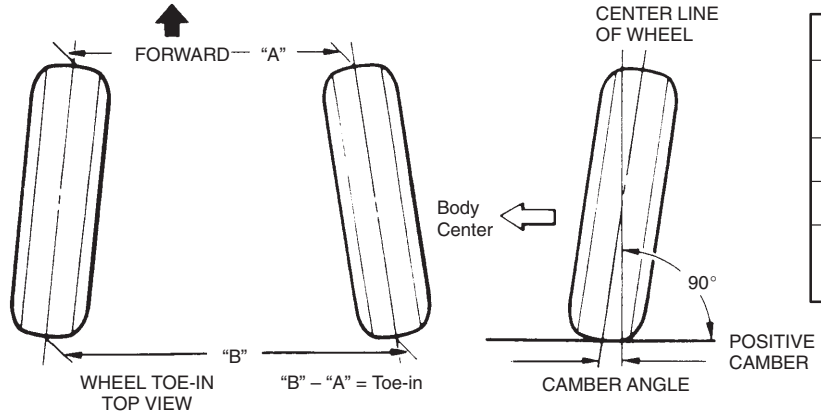

Alignment service data	
Toe-in	–3.0 ± 1 mm (–0.118 ± 0.039 in.)
Camber	–0°20' ± 1°
Caster	3°40' ± 1°
Kingpin inclination	11°50' ± 1°

NOTE:
Toe-in value given above was measured by using a toe-in gauge.

Front alignment refers to the angular relationship between the front wheels, the front suspension attaching parts and the ground. Generally, the only adjustment required for front alignment is toe setting.
Camber and caster can't be adjusted. Therefore, should camber or caster be out of specification due to the damage caused by hazardous road conditions or collision, whether the damage is in body or in suspension should be determined. If the body is damaged, it should be repaired and if suspension is damaged, it should be replaced.

TOE SETTING

Toe is the turning in or out of the front wheels. The purpose of a toe specification is to ensure parallel rolling of the front wheels (Excessive toe-in or toe-out may increase tire wear).
Amount of toe can be obtained by subtracting "A" from "B" as shown in above figure and therefore is given in mm (in.).

CAMBER

Camber is the tilting of the front wheels from the vertical, as viewed from the front of the vehicle. When the wheels tilt outward at the top, the camber is positive. When the wheels tilt inward at the top, the camber is negative. The amount of tilt is measured in degrees.

PRELIMINARY CHECKS PRIOR TO ADJUSTING FRONT ALIGNMENT

Steering and vibration complaints are not always the result of improper alignment. An additional item to be checked is the possibility of tire lead due to worn or improperly manufactured tires. “Lead” is the deviation of the vehicle from a straight path on a level road without hand pressure on the steering wheel. Section 3 of this manual contains a procedure for determining the presence of a tire lead problem. Before making any adjustment affecting toe setting, the following checks and inspections should be made to ensure correctness of alignment readings and alignment adjustments:

1) Check all tires for proper inflation pressures and approximately the same tread wear.
2) Check for loose of ball joints. Check tie rod ends; if excessive looseness is noted, it must be corrected before adjusting.
3) Check for run-out of wheels and tires.
4) Check vehicle trim heights; if out of limits and a correction is to be made, it must be made before adjusting toe.
5) Check for loose of suspension arms.
6) Check for loose or missing stabilizer bar attachments.
7) Consideration must be given to excess loads, such as tool boxes. If this excess load is normally carried in vehicle, it should remain in vehicle during alignment checks.
8) Consider condition of equipment being used to check alignment and follow manufacturer’s instructions.
9) Regardless of equipment used to check alignment, vehicle must be on a level surface both fore and aft and transversely.

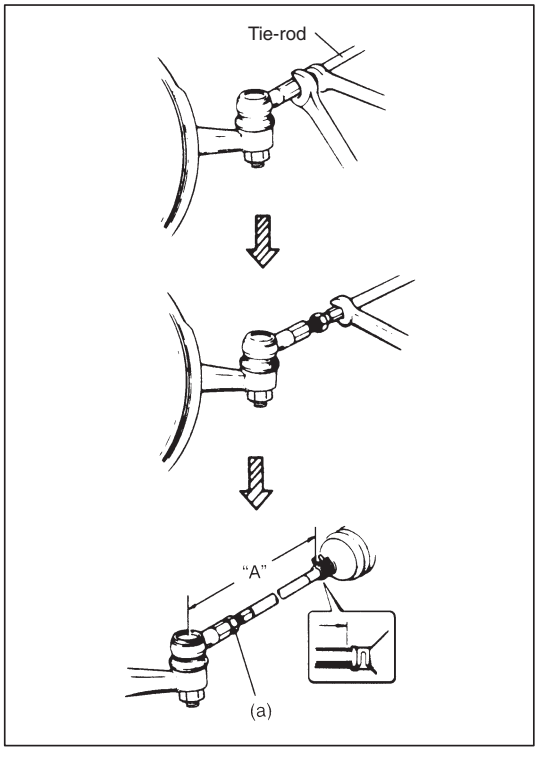

TOE ADJUSTMENT

Toe is adjusted by changing the tie rod length. Loosen right and left tie rod end lock nuts first and then rotate right and left tie rods by the same amount to align toe-in to specification. In this adjustment, right and left tie rods should become equal in length (“A” in left figure).

Before rotating tie rods, apply grease between tie rods and rack boots so that boots won’t be twisted.

After adjustment, tighten lock nuts to specified torque and make sure that rack boots are not twisted.

Tightening Torque
(a): 45 N·m (4.5 kg-m, 32.5 lb-ft)

CAMBER AND CASTER ADJUSTMENT

Should camber or caster be found out of specifications upon inspection, locate its cause first. If it is in damaged, loose, bent, dented or worn suspension parts, they should be replaced. If it is in vehicle body, repair it so as to attain specifications.

To prevent possible incorrect reading of camber or caster, vehicle front end must be moved up and down a few times before inspection.

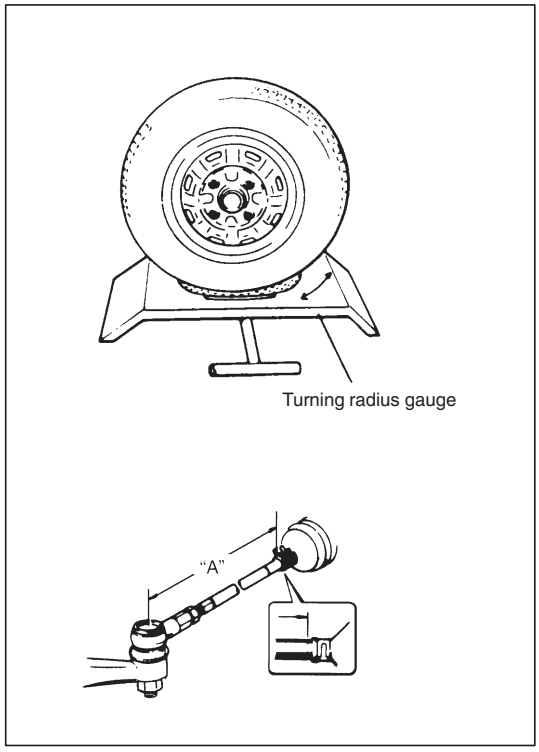

STEERING ANGLE

When tie rod or tie rod end was replaced, check toe and then also steering angle with turning radius gauge.
If steering angle is not correct, check if right and left tie rods are equal in length ("A" in left figure).

NOTE:
If tie rod lengths were changed to adjust steering angle, reinspect toe-in.

Steering angle inside : 35 ± 3°
outside: 31 ± 3°

Reference Information:

Side slip:
For inspecting front wheel side slip with side slip tester:

Side slip limit: IN 2 mm/m – OUT 4 mm/m
(IN 0.079 in/3.3 ft – OUT 0.157 in/3.3 ft)

If side slip exceeds above limit, toe-in or front wheel alignment may not be correct.

SECTION 3B

MANUAL RACK AND PINION

WARNING:
For vehicles equipped with Supplemental Restraint (Air Bag) System:

- **Service on and around the air bag system components or wiring must be performed only by an authorized SUZUKI dealer. Refer to "Air Bag System Components and Wiring Location View" under "General Description" in air bag system section in order to confirm whether you are performing service on or near the air bag system components or wiring. Please observe all WARNINGS and "Service Precautions" under "On-Vehicle Service" in air bag system section before performing service on or around the air bag system components or wiring. Failure to follow WARNINGS could result in unintentional activation of the system or could render the system inoperative. Either of these two conditions may result in severe injury.**
- **Technical service work must be started at least 90 seconds after the ignition switch is turned to the "LOCK" position and the negative cable is disconnected from the battery. Otherwise, the system may be activated by reserve energy in the Sensing and Diagnostic Module (SDM).**

NOTE:
All steering gear fasteners are important attaching parts in that they could affect the performance of vital parts and systems, and/or could result in major repair expense. They must be replaced with one of the same part number or with an equivalent part if replacement becomes necessary. Do not use a replacement part of lesser quality or substitute design. Torque values must be used as specified during reassembly to assure proper retention of these parts.

CONTENTS

GENERAL DESCRIPTION

The rack and pinion steering system consists of two components, the rack (1) and the pinion (2). When the steering wheel (3) is turned, the motion is transmitted to the steering shaft joint (4) and then to the pinion (2).
Since the pinion teeth mesh with teeth on rack, the motion is further transferred to the rack and changed to linear motion. The force is then transmitted through the tie rods (5) to the steering knuckles (6) which turn wheels.

NOTE:
Although the figure below shows only the left-hand steering vehicle, the same work procedure and data apply to the right-hand steering vehicle.

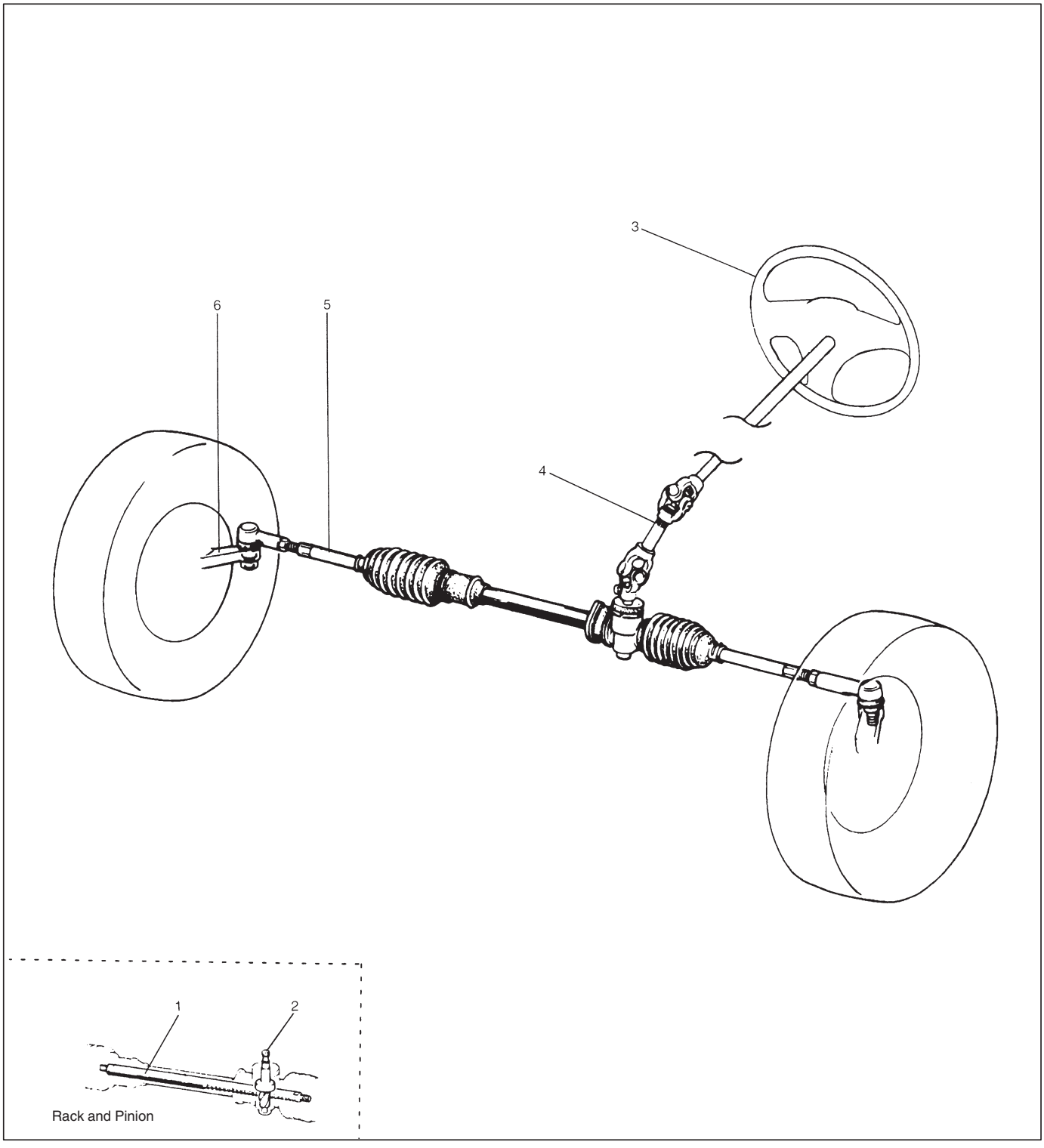

DIAGNOSIS

DIAGNOSIS TABLE

Refer to SECTION 3.

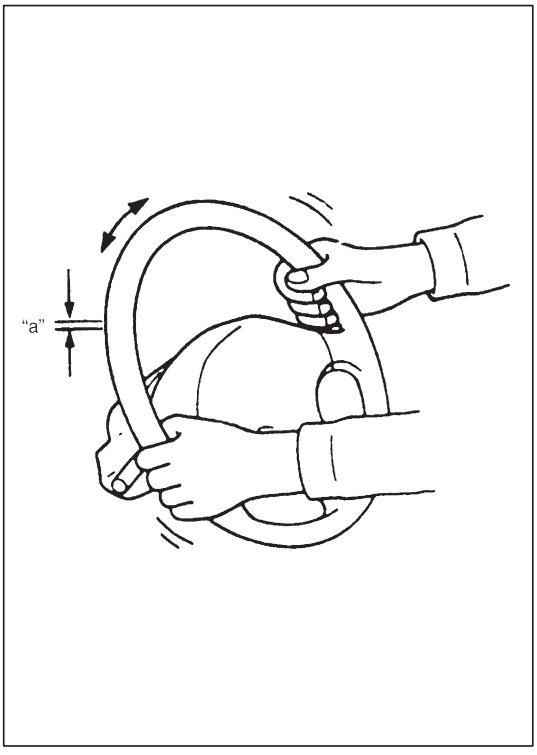

STEERING WHEEL CHECK

Check steering wheel for play and rattle, holding vehicle in straight forward condition on the ground.

Steering wheel play "a": 0 – 30 mm (0 – 1.1 in.)

If steering wheel play is not within specification, inspect as follows and replace if found defective.

- Tie-rod end ball stud for wear (ball stud should move when more than 2 kg-cm torque is applied.)
- Lower ball joint for wear
- Steering shaft joint for wear
- Steering pinion or rack gear for wear or breakage
- Each part for looseness

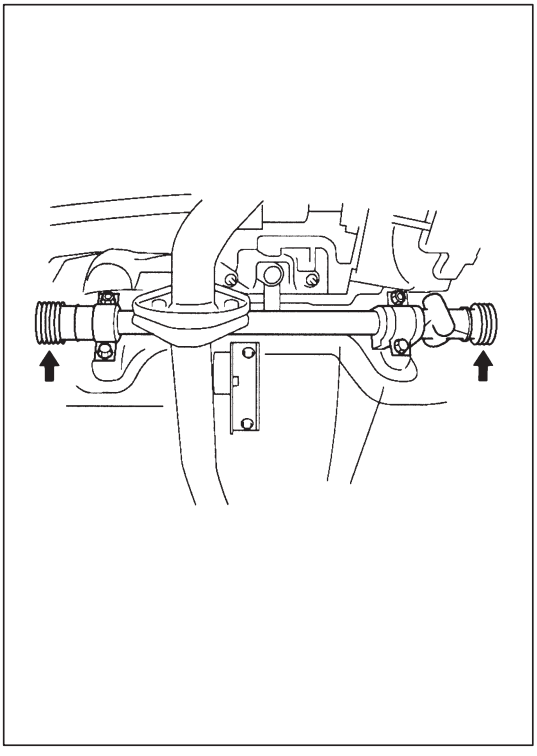

STEERING RACK BOOT CHECK

Hoist vehicle.

Inspect each boot for tear. A torn boot allows entry of dust and water which can cause wear to steering rack and pinion to produce noise as well as rust to result in malfunction of steering system.

If even a small tear is noted, replace with new one.

Also, check each boot for dent. If there is a dent, keep boot in most compressed state for some seconds to correct dent.

Boots should be visually inspected for any damage, dent and tear during every periodical inspection at specified intervals and whenever vehicle is hoisted for any other purpose.

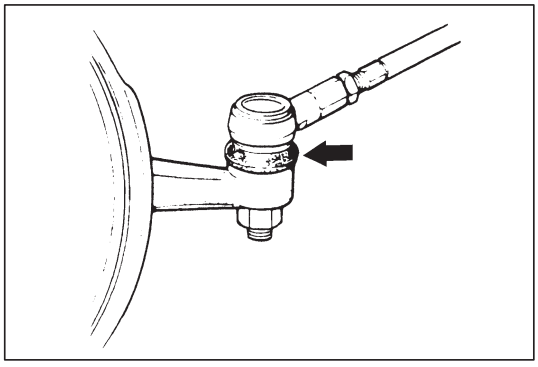

TIE ROD END BOOTS CHECK

Inspect each boot for tear. If even a small tear is noted, replace with new one.

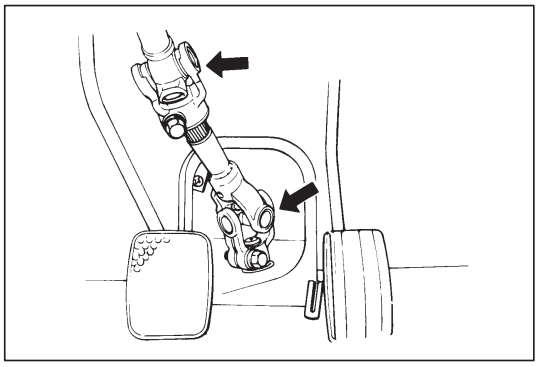

STEERING SHAFT JOINT CHECK

Check shaft joint for wear, breakage and other damage and replace if any defect exists.

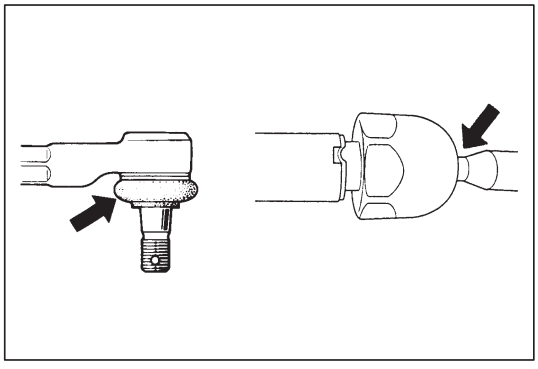

TIE ROD END CHECK

1) Inspect for play in ball joint.
2) Inspect for play in rack end ball joint.
   In either case, if found defective, replace.

ON-VEHICLE SERVICE

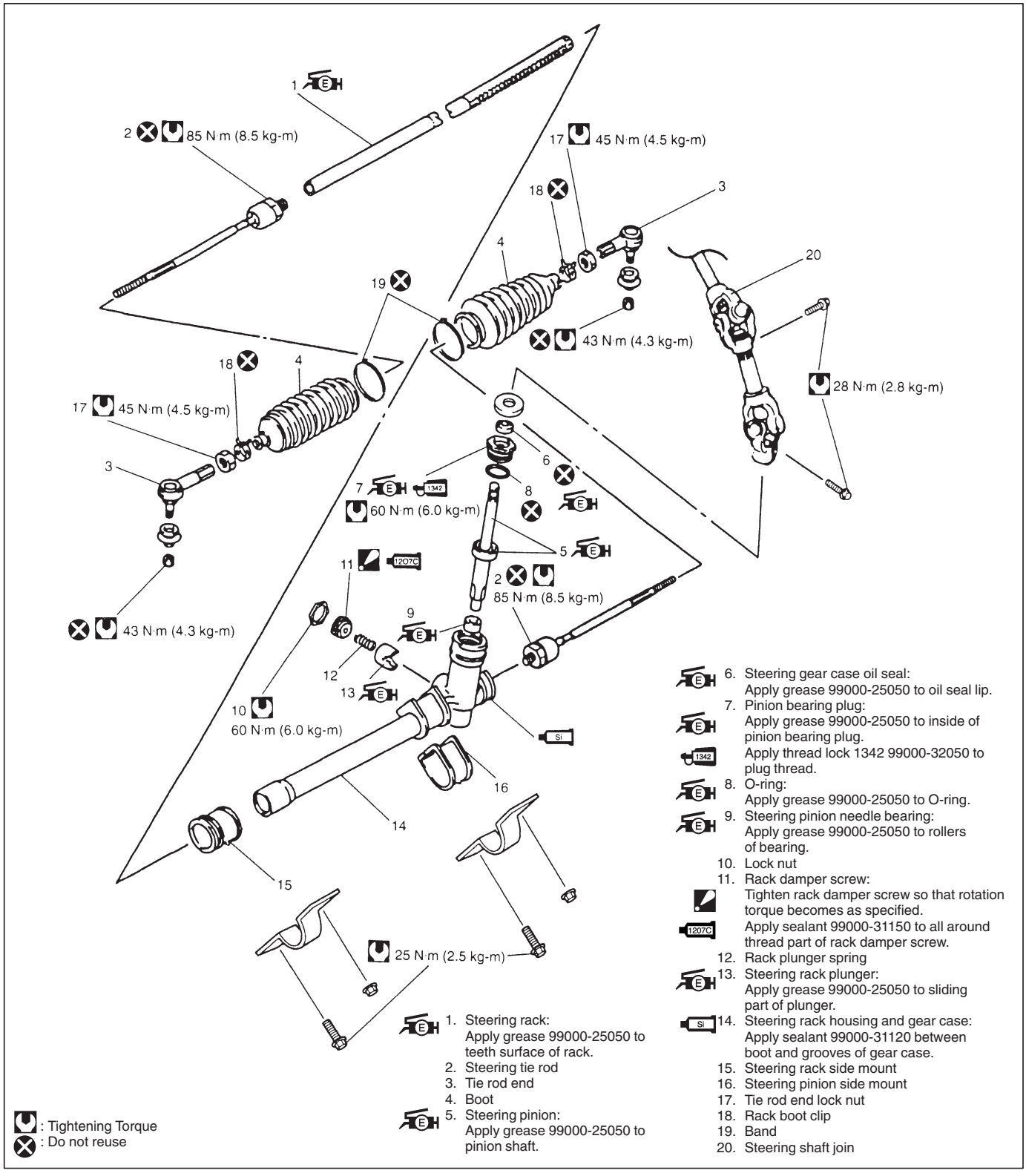

LUBRICATION

When inner parts of the steering gear case were disassembled, they should be washed clean before reassembly. It is recommended to use the grease as given at the right where grease application is indicated in the text.

*** SUZUKI SUPER GREASE (E) 99000-25050, or Lithium grease (applicable for –40°C ~ 130°C or –40°F ~ 266°F)**

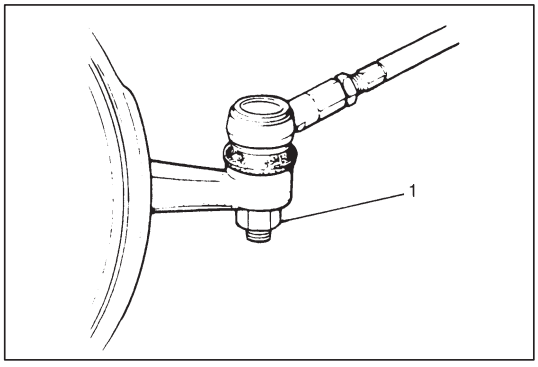

TIE ROD END

REMOVAL

1) Hoist vehicle and remove wheel.
2) Remove tie rod end nut (1) from steering knuckle.

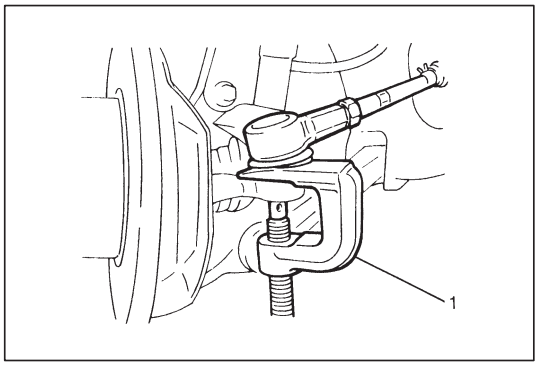

3) Disconnect tie rod end from knuckle, using puller (1).

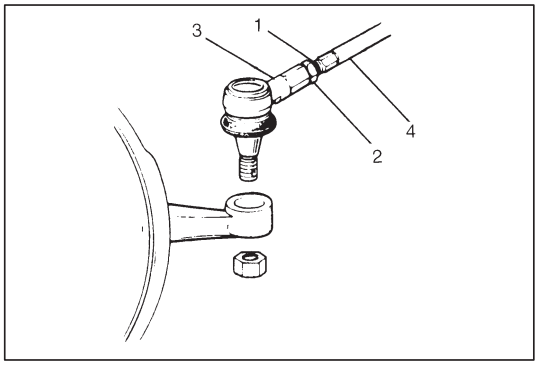

4) For ease of adjustment after installation, make marking (1) of tie rod end lock nut (2) position on tie rod end thread. Then loosen lock nut (2) and remove tie rod end (3) from tie rod (4).

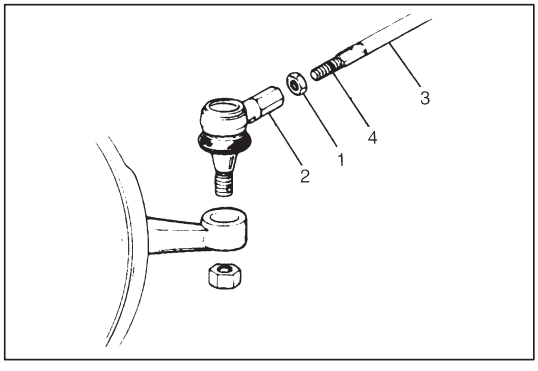

INSTALLATION

1) Install tie rod end lock nut (1) and tie rod end (2) to tie rod (3). Align lock nut with mark (4) on tie rod thread.

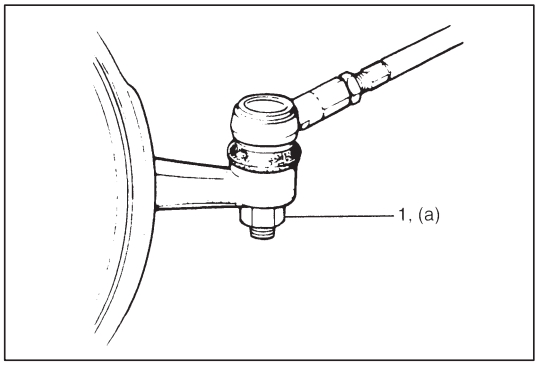

2) Connect tie rod end to knuckle. Tighten new tie rod end nut (1) to specified torque.

Tightening Torque
(a): 43 N·m (4.3 kg-m, 31.5 lb-ft)

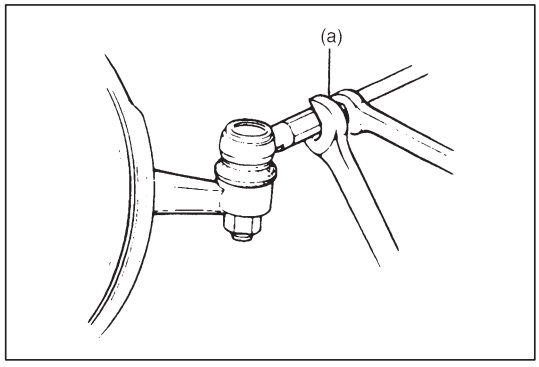

3) Inspect for proper toe (Refer to FRONT END ALIGNMENT).
4) After confirming proper toe, tighten tie rod end lock nut to specified torque.

   Tightening Torque
   (a): 45 N·m (4.5 kg-m, 32.5 lb-ft)

5) Tighten wheel to specified torque and lower hoist.

   Tightening Torque for wheel nuts:
   85 N·m (8.5 kg-m, 61.5 lb-ft)

MANUAL RACK AND PINION ASSEMBLY (STEERING GEAR CASE)

REMOVAL

CAUTION:
Be sure to set front wheels in straight direction and remove ignition key from key cylinder before these steps, otherwise contact coil of air bag system may get damaged.

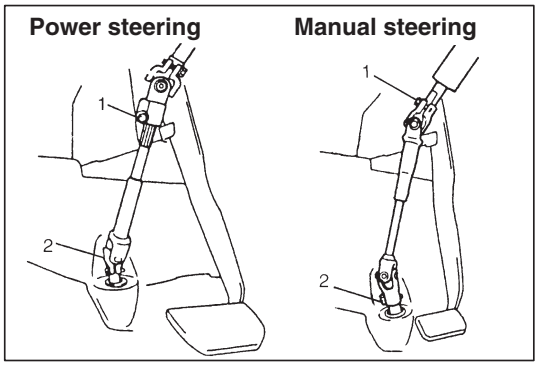

1) Slide driver's seat as far back as possible.
2) Pull off front part of floor mat on driver's side and remove steering shaft joint cover.
3) For ease of installation, loosen steering shaft upper joint bolt (1) but don't remove.
4) Remove steering shaft lower joint bolt (2) and disconnect lower joint from pinion.

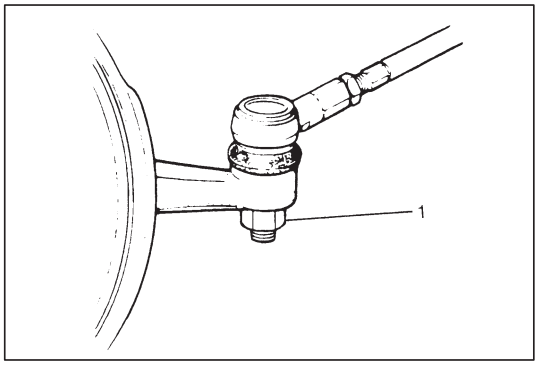

5) Hoist vehicle and remove both wheels.
6) Remove tie rod end nuts (1) from both knuckles.

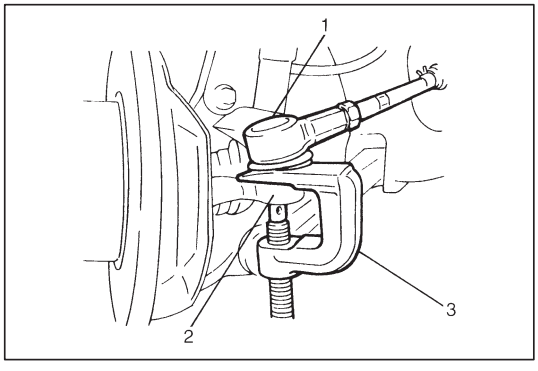

7) Disconnect both tie rod ends (1) from knuckles (2), using puller (3).

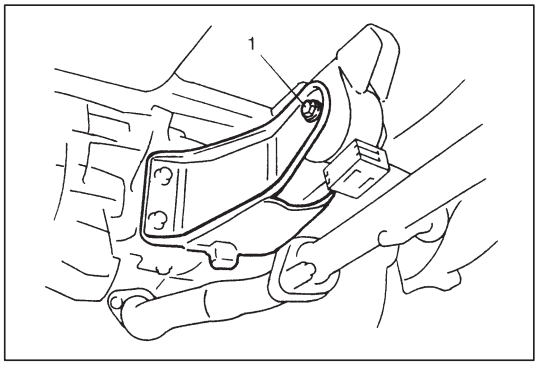

8) Support engine with transmission by transmission jack and then remove engine rear mouting bolt (1).

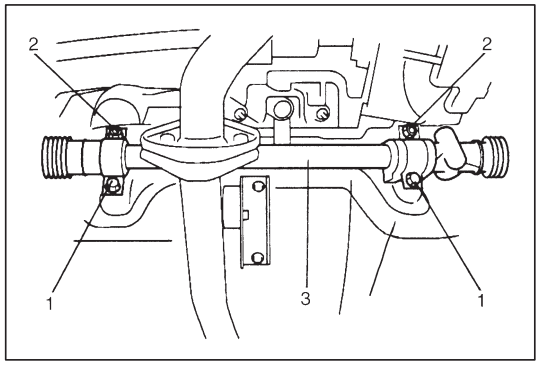

9) Remove steering gear case mount bolts (1), nuts (2) and gear case brackets, then remove gear case (3).

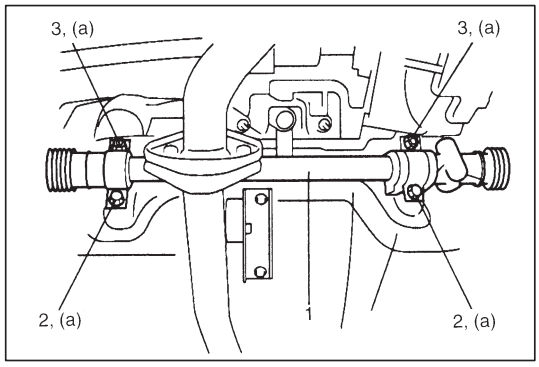

INSTALLATION

1) Apply grease to inside of pinion packing and install pinion packing onto pinion. Mount steering gear case (1) to body and tighten gear case mount bolts (2) and nuts (3) to specified torque.

   Tightening Torque
   (a): 25 N·m (2.5 kg-m, 18.0 lb-ft)

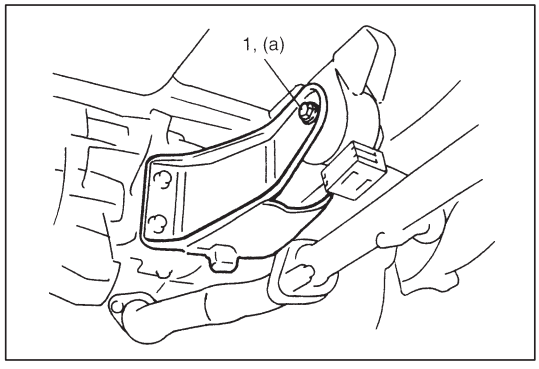

2) Install engine rear mounting bolt (1).
   Tighten bolts to specified torque.

   Tightening Torque
   (a): 55 N·m (5.5 kg-m, 40.0 lb-ft)

3) Remove transmission jack.

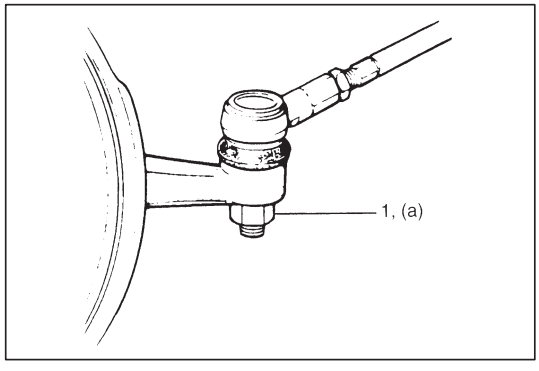

4) Install tie rod ends to knuckles (right & left). Tighten each new tie rod end nut (1) to specified torque.

   Tightening Torque
   (a): 43 N·m (4.3 kg-m, 31.5 lb-ft)

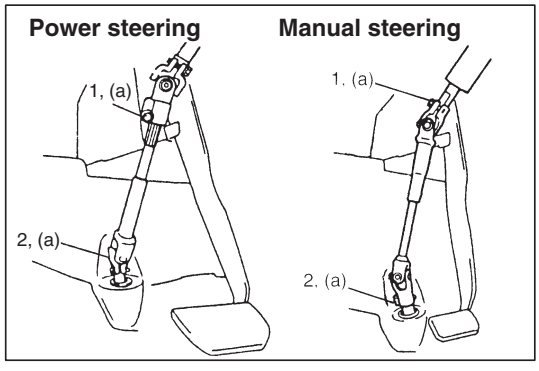

5) Be sure that steering wheel and brake discs (right & left) are all straight-ahead position and then insert steering lower joint into steering pinion shaft.
6) Tighten steering shaft joint bolts (1) and (2) to specified torque (Lower side first and then upper side).

   Tightening Torque
   (a): 28 N·m (2.8 kg-m, 20.5 lb-ft)

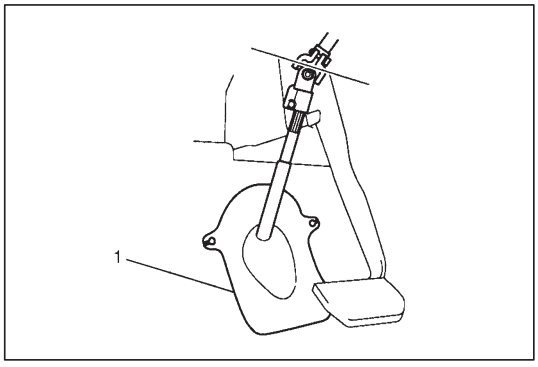

7) Reinstall cover (1) removed previously to steering shaft joint.
8) Put back floor mat as it was.
9) Install both wheels and tighten wheel nuts to specified torque.

Tightening Torque for wheel nuts:
85 N·m (8.5 kg-m, 61.5 lb-ft)

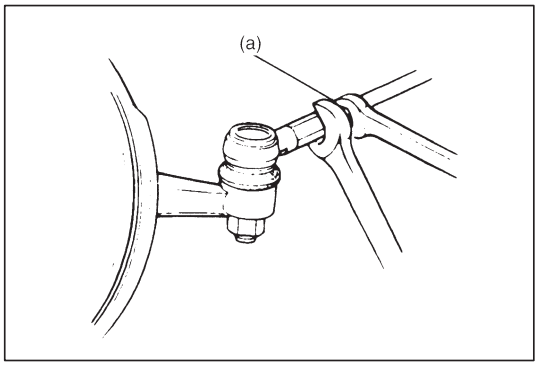

10) Lower hoist.
11) Check toe setting. Adjust as required (Refer to Section 3A FRONT END ALIGNMENT).
12) Tighten both tie rod end lock nuts to specified torque.

Tightening Torque
(a): 45 N·m (4.5 kg-m, 32.5 lb-ft)

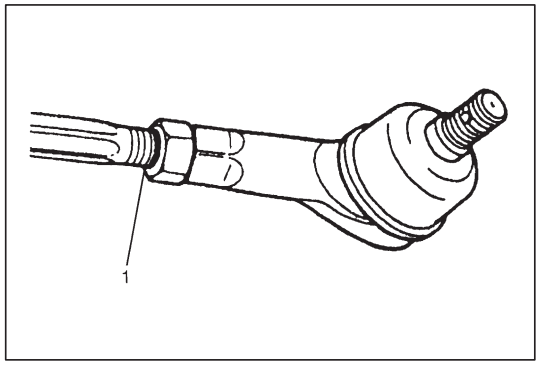

RACK BOOT/TIE ROD

REMOVAL

1) Remove steering gear case by performing Steps 1) – 9) in MANUAL RACK AND PINION REMOVAL of this section.
2) For ease of adjustment after installation, make marking (1) of tie rod end lock nut position of tie rod end thread.

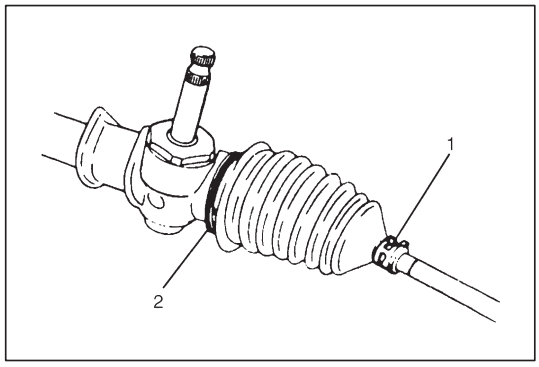

3) Loosen tie rod end lock nut and remove tie rod end.
4) Remove boot band (2) and clip (1).
5) Remove boot from tie rod.

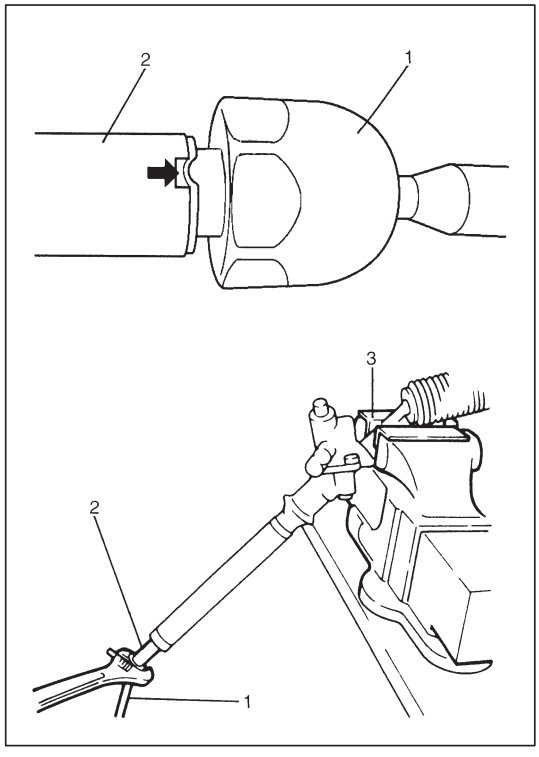

6) Unbend bent part of tie rod (1).
7) Hold rack with soft jawed vise (3) and remove tie rod from rack (2).

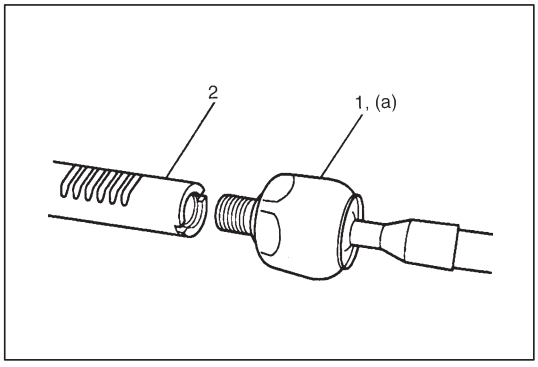

INSTALLATION

1) Install new tie rod (1) to rack (2).
2) Hold rack with soft jawed vise and tighten tie rod to specified torque.

   Tightening Torque
   (a): 85 N·m (8.5 kg-m, 61.5 lb-ft)

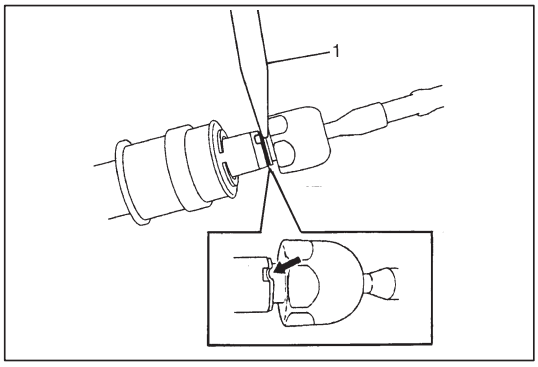

3) Caulk a part of tie rod indicated in figure with punch (1).

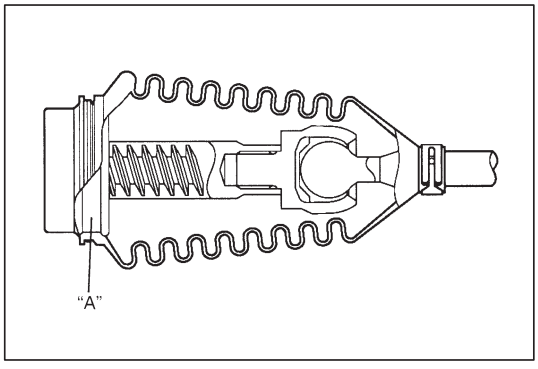

4) Apply sealant to gear case groove "A" indicated in figure.

   "A": Sealant, 99000-31120

   Position boot properly in grooves of gear case (or rack side mount) and tie rod.
   After this, check to ensure that boot is free from twist and dent.

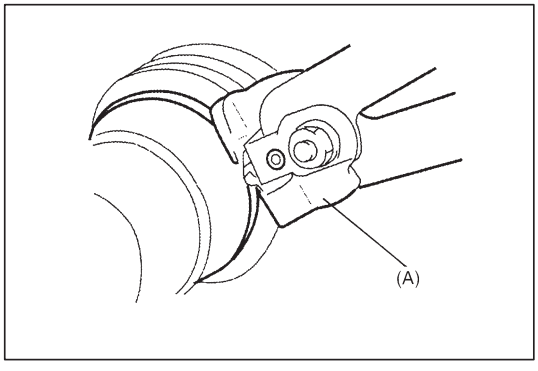

5) Fasten boot with new band and clip securely.

   Special Tool
   (A): 09943-55010

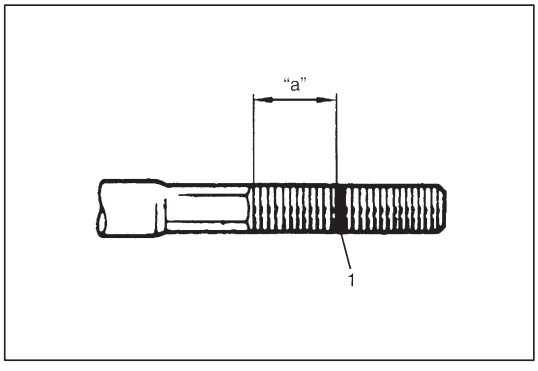

6) Install tie rod end lock nut and tie rod end to tie rod.
   Position lock nut to marking (1) made in removal.

   NOTE:
   When tie rod was replaced, measure length "a" on removed tie rod and use it on new replacement tie rod so as to position lock nut properly.

7) For installation procedures following the above, use Steps 1) – 12) in INSTALLATION of STEERING GEAR CASE.

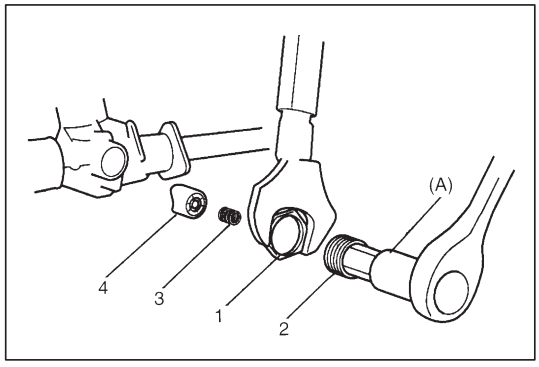

STEERING RACK PLUNGER

REMOVAL

1) Remove rack boots and tie rods.
2) Loosen lock nut (1) with holding damper screw (2) with special tool.

   Special Tool
   (A): 09944-28320

3) Remove lock nut (1), rack damper screw (2), rack plunger spring (3) and rack plunger (4).

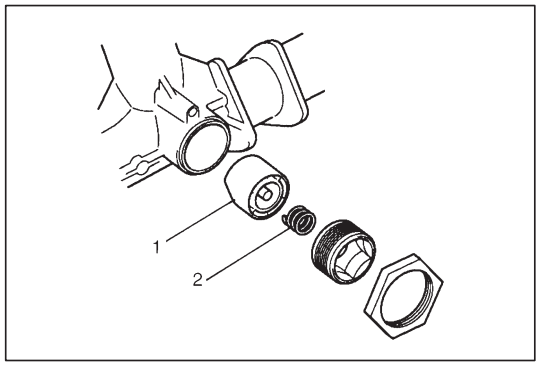

INSPECTION

- Inspect rack plunger (1) for wear or damage.
- Inspect rack plunger spring (2) for deterioration.
  In either case, if found defective, replace.

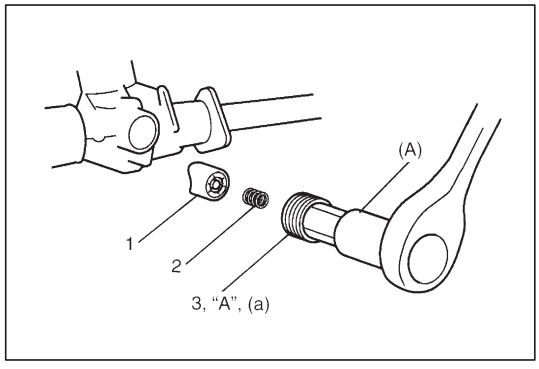

INSTALLATION

1) Apply grease lightly to sliding part of plunger (1) against rack.
2) Install plunger and spring (2) as shown.
3) Apply sealant to all around thread part of rack damper screw (3) and tighten it to specified torque with special tool.

   Special Tool
   (A): 09944-28320
   “A”: Sealant 1207C, 99000-31150

   Tightening Torque
   (a): 7 – 12 N·m (0.7 – 1.2 kg-m, 5.5 – 8.5 lb-ft)

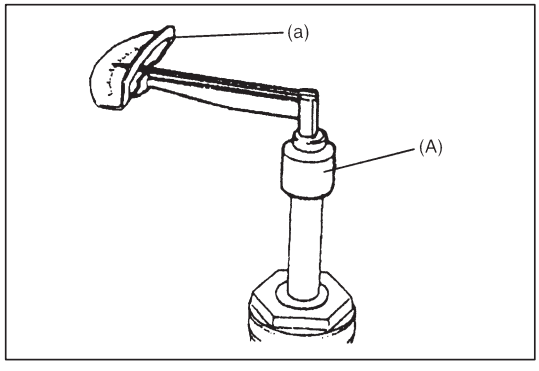

4) After tightening rack damper screw to specified torque, turn it back by 30° ~ 60° so that rotation torque becomes as specified below.
   Pinion rotation torque should be checked with rack position centered.

   Special Tool
   (A): 09944-18310
   Rotation Torque of pinion

   (a): 1.0 – 1.5 N·m (0.10 – 0.15 kg-m, 0.72 – 1.08 lb-ft)

   Also, check if rack as a whole moves smoothly.

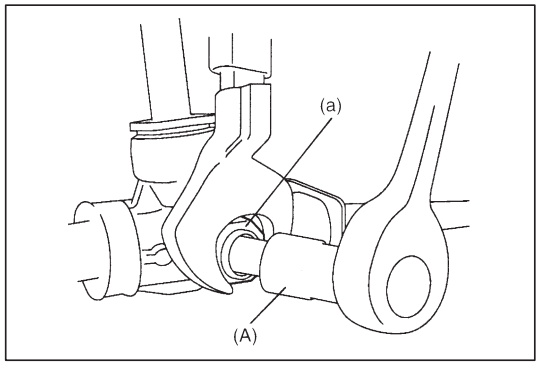

5) After adjustment, tighten lock nut to specified torque with holding damper screw at the position.

   Special Tool
   (A): 09944-28320

   Tightening Torque
   (a): 60 N·m (6.0 kg-m, 43.5 lb-ft)

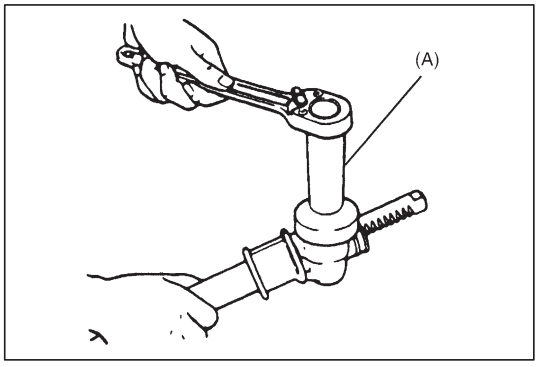

STEERING PINION

REMOVAL

1) Remove rack plunger as shown in STEERING RACK PLUNGER.
2) Remove bearing plug with special tool.

Special Tool
(A): 09944-28310

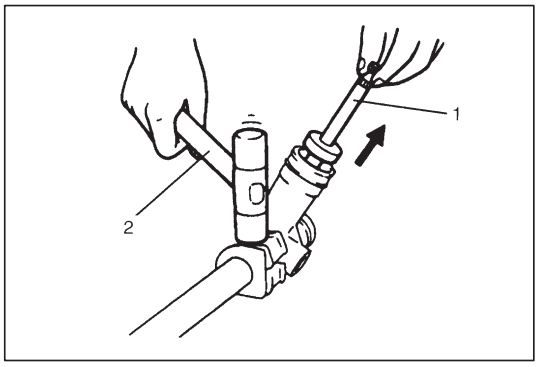

3) Tap on position as shown with plastic hammer (2) to separate pinion assembly (1) from housing, and remove pinion assembly (1).

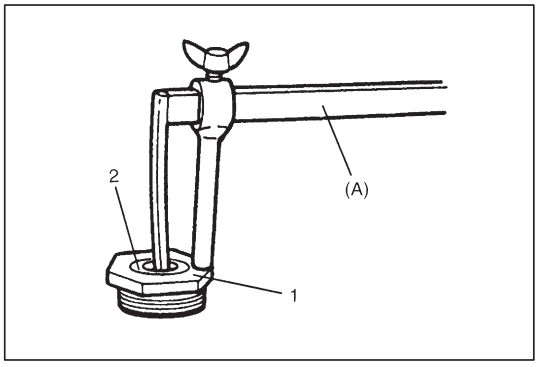

4) Remove oil seal (2) with special tool from pinion bearing plug (1).

Special Tool
(A): 09913-50121

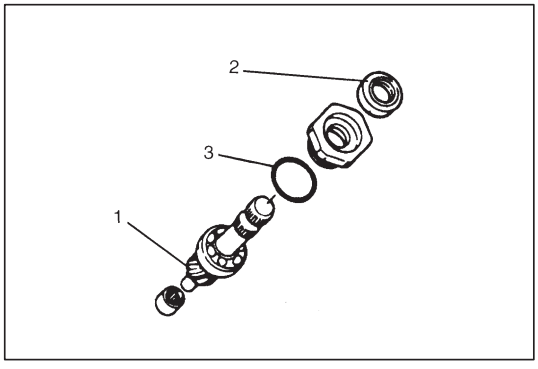

INSPECTION

- Inspect pinion teeth surface (1) for wear or damage.
- Inspect oil seal (2) for damage.
- Inspect O-ring (3) for damage.
- Check rotation condition of bearing and inspect for wear. If found defective, replace.

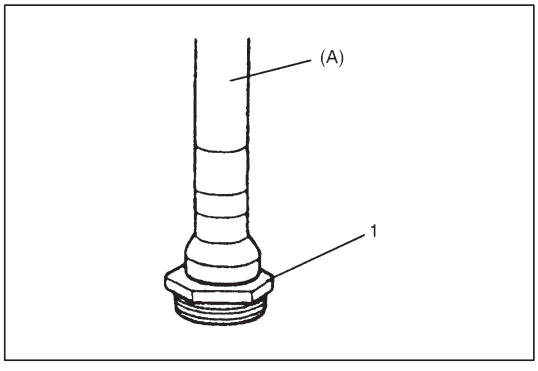

INSTALLATION

1) Install new oil seal with special tool to pinion bearing plug (1).

Special tool
(A): 09925-98210

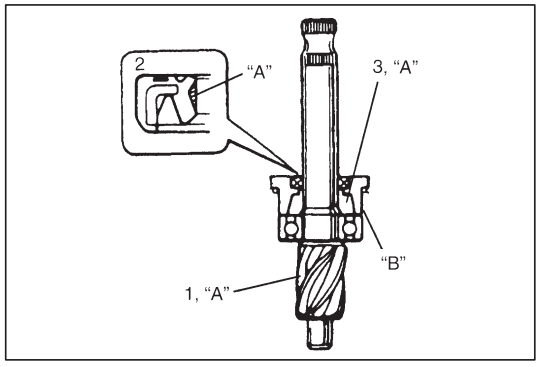

2) Apply grease to all around pinion teeth (1), pinion needle bearing, gear case, O-ring and gear case oil seal lip (2).
Fill inside of pinion bearing plug (3) with grease.

"A": Grease E, 99000-25050

3) Apply thread lock cement to pinion bearing plug thread.
Install pinion assembly to steering gear case.

"B": Thread Lock 1342, 99000-32050

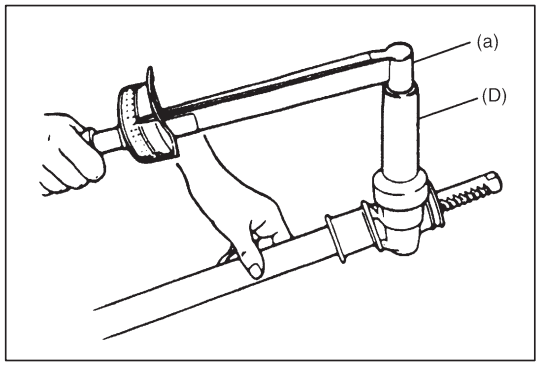

4) Tighten pinion bearing plug to specified torque.

Tightening Torque
(a): 60 N·m (6.0 kg-m, 43.5 lb-ft)

Special Tool
(D): 09944-28310

5) Install rack plunger as described in STEERING RACK PLUNGER of this section.

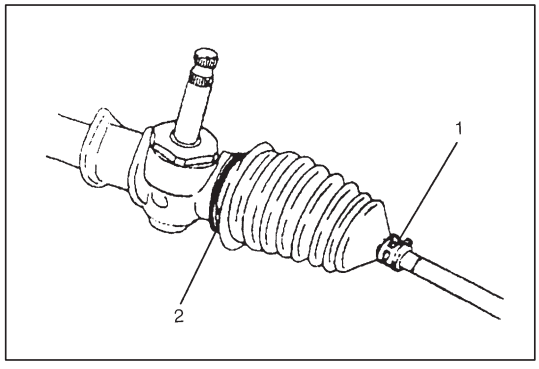

STEERING RACK

REMOVAL

1) Remove steering gear case.
2) Remove boot bands (2) and clips (1).
3) Move both boots toward tie rod end.

4) Remove tie rods (right and left) from steering rack by performing Steps 6) and 7) in RACK BOOT/TIE ROD REMOVAL of this section.
5) Mark left and right tie rods accordingly.
6) Remove rack plunger and pinion assembly from gear case by performing Steps 1) – 3) in STEERING PINION REMOVAL of this section.

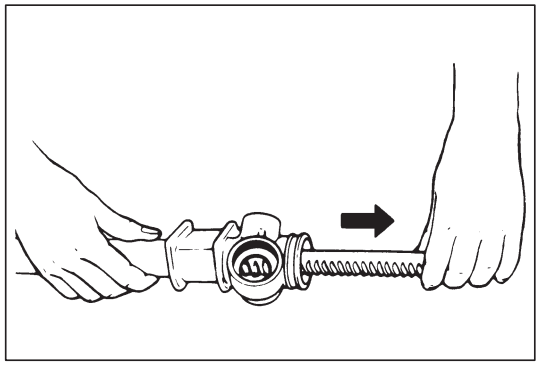

7) Remove rack from gear case. Direction for rack removal is as shown.

CAUTION:
Inside of steering rack bushing is coated with special coating. As it is damageable, be very careful not to cause damage to it when removing rack from steering gear case.

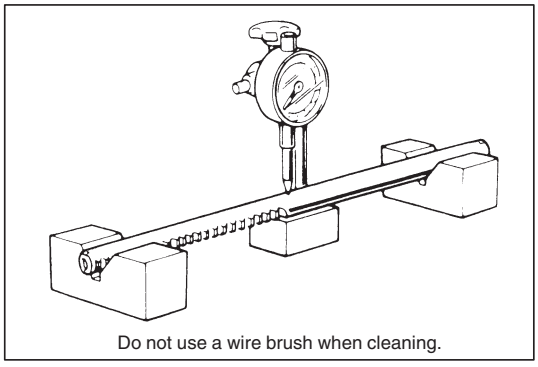
Do not use a wire brush when cleaning.

INSPECTION

Inspect for deflection, teeth wear, or damage, back surface wear or damage.

Limit of rack deflection: 0.4 mm (0.016 in.)

If deflection exceeds limit, replace rack.

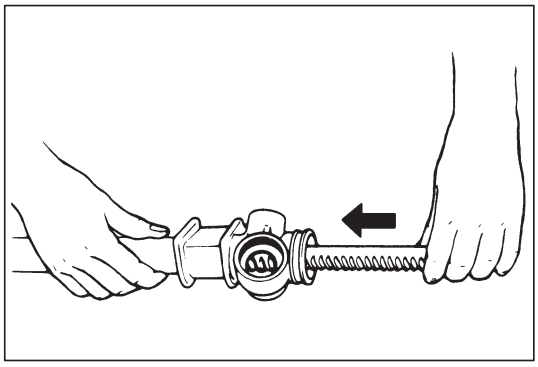

INSTALLATION

1) Apply grease to entire teeth surface of rack and its periphery.
2) Slide rack into steering gear case in the direction as shown.

> **CAUTION:**
> **Inside of steering rack bushing is coated with special coating. As it is damageable, be very careful not to cause damage to it when inserting rack into steering gear case.**

3) Install pinion assembly to gear case by performing Steps 2) – 4) in STEERING PINION INSTALLATION of this section.
4) Perform Steps 1) – 5) in STEERING RACK PLUNGER INSTALLATION of this section.

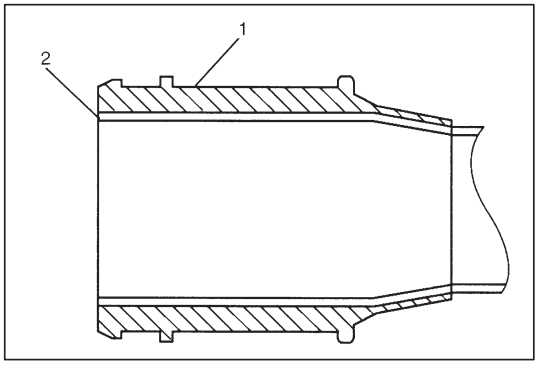

5) Before installing boot to steering rack housing, position rack side mount (1) so that its end (2) is flush with housing end. Install tie rods to rack by performing Steps 1) – 7) in RACK BOOT/TIE ROD INSTALLATION of this section.

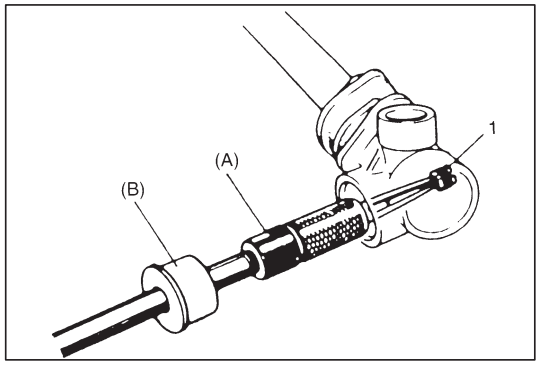

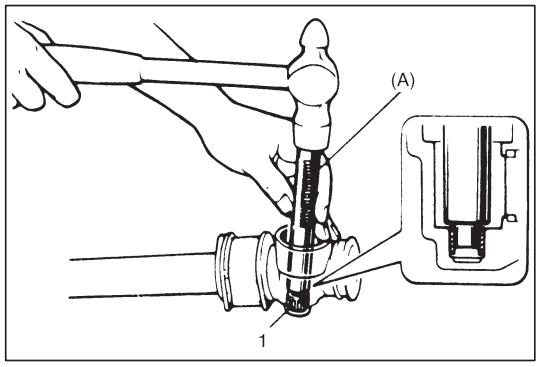

PINION BEARING

REMOVAL

1) Remove rack from steering gear case, referring to STEERING RACK REMOVAL of this section.
2) Remove pinion bearing (1) from gear case with special tools as shown.

Special Tool
(A): 09921-20200
(B): 09930-30102

INSTALLATION

1) Apply grease to rollers of pinion bearing.
2) Press-fit pinion bearing (1) into gear case with special tool as shown.
   After press-fitting, make sure that bearing rollers are installed properly.

Special Tool
(A): 09943-88211

3) Follow Steps 1) – 5) in STEERING RACK INSTALLATION of this section to complete installation.

REQUIRED SERVICE MATERIALS

MATERIAL	RECOMMENDED SUZUKI PRODUCT	USE
Lithium Grease (Should be applicable for –40°C ~ 130°C)	SUZUKI SUPER GREASE (E) (99000-25050)	● Sliding part of rack against steering housing (All around rack plunger and rack) ● Sliding part against steering pinion (Oil seal lip, needle bearing) ● Steering rack and pinion gear teeth ● Rack end ball joint
Lock cement	THREAD LOCK 1342 (99000-32050)	● Pinion bearing plug thread
Sealant	SUZUKI BOND NO. 1207C (99000-31150)	● All around thread part of rack damper screw
Silicon sealant	SUZUKI SILICONE SEAL (99000-31120)	● Contacting parts of gear case groove and pinion side boot

SPECIAL TOOLS

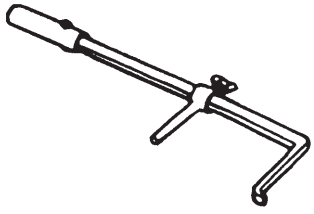 09913-50121 Oil seal remover	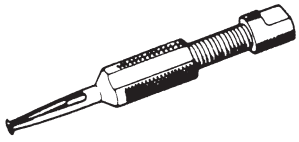 09921-20200 Pinion bearing remover	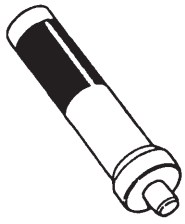 09925-98210 Bearing installer	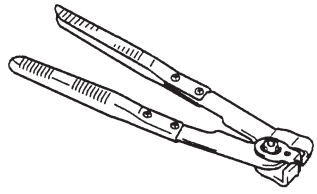 09943-55010 (J-22610) Boot clamp plier
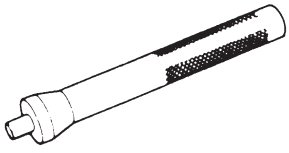 09943-88211 Pinion bearing installer	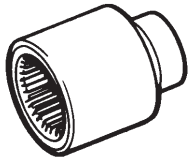 09944-18310 Pinion torque checking socket	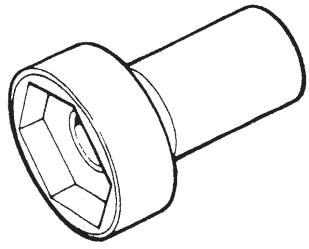 09944-28310 42 mm Socket (Pinion bearing plug socket)	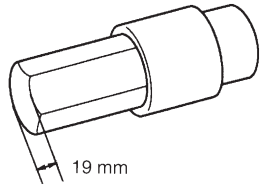 09944-28320 Hexagon bit (19 mm)
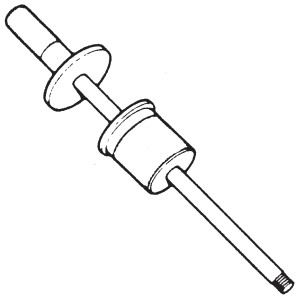 09930-30102 Sliding shaft			

SECTION 3B1

ELECTRICAL POWER STEERING (EPS) SYSTEM (IF EQUIPPED)

WARNING:
For vehicles equipped with Supplemental Restraint (Air Bag) System:

- **Service on and around the air bag system components or wiring must be performed only by an authorized SUZUKI dealer. Refer to "Air Bag System Components and Wiring Location View" under "General Description" in air bag system section in order to confirm whether you are performing service on or near the air bag system components or wiring. Please observe all WARNINGS and "Service Precautions" under "On-Vehicle Service" in air bag system section before performing service on or around the air bag system components or wiring. Failure to follow WARNINGS could result in unintentional activation of the system or could render the system inoperative. Either of these two conditions may result in severe injury.**
- **Technical service work must be started at least 90 seconds after the ignition switch is turned to the "LOCK" position and the negative cable is disconnected from the battery. Otherwise, the system may be activated by reserve energy in the Sensing and Diagnostic Module (SDM).**

CONTENTS

GENERAL DESCRIPTION

This electrical power steering (EPS) system consists of a P/S control module, a torque sensor and a motor assembly (with clutch incorporated) installed to the steering column.
In this system, the P/S control module determines the level and direction of the assist force for the steering wheel according to the signals from the torque sensor and the vehicle speed, runs the motor so as to assist operation of the steering wheel.

COMPONENTS

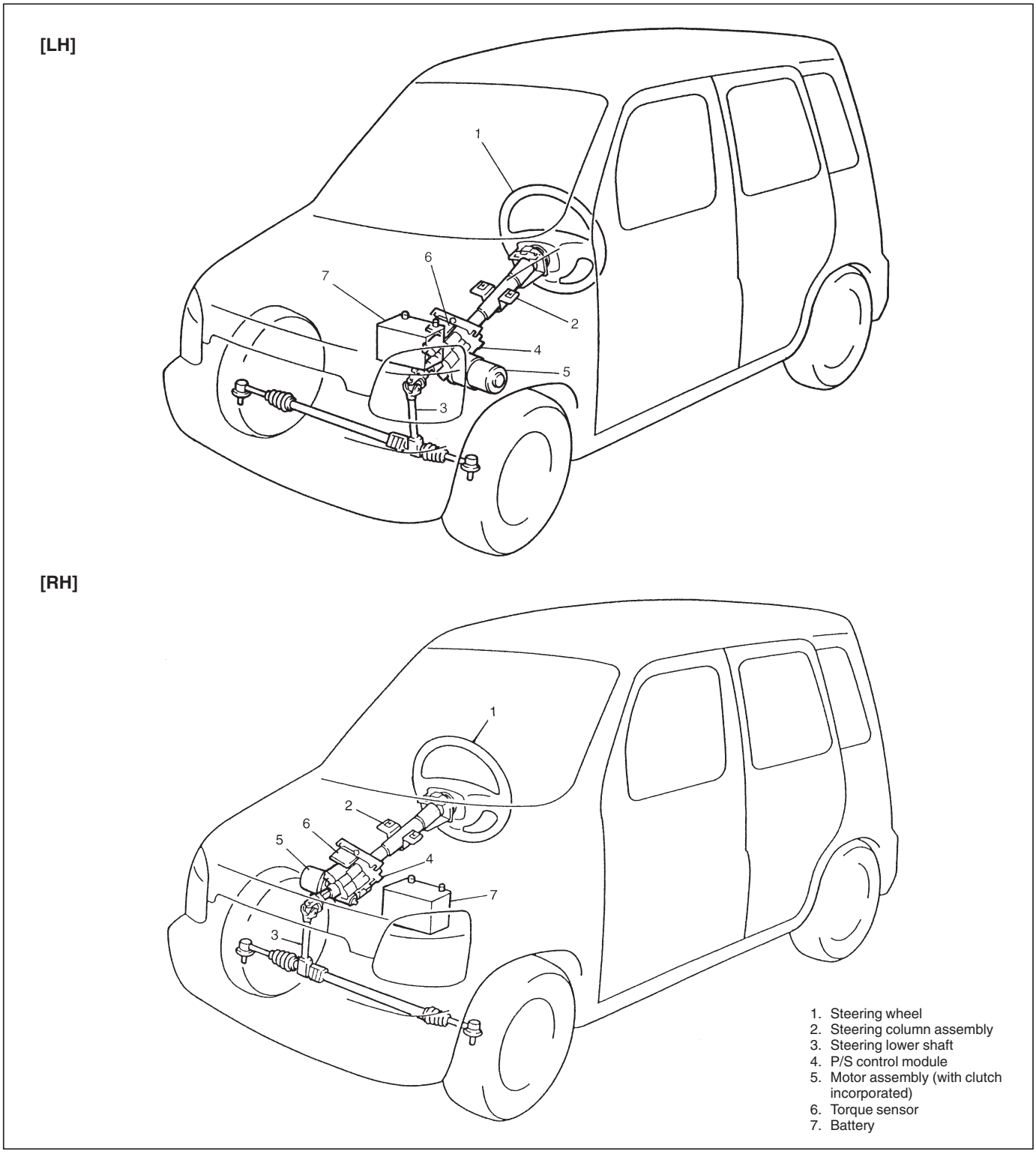

WIRING DIAGRAM

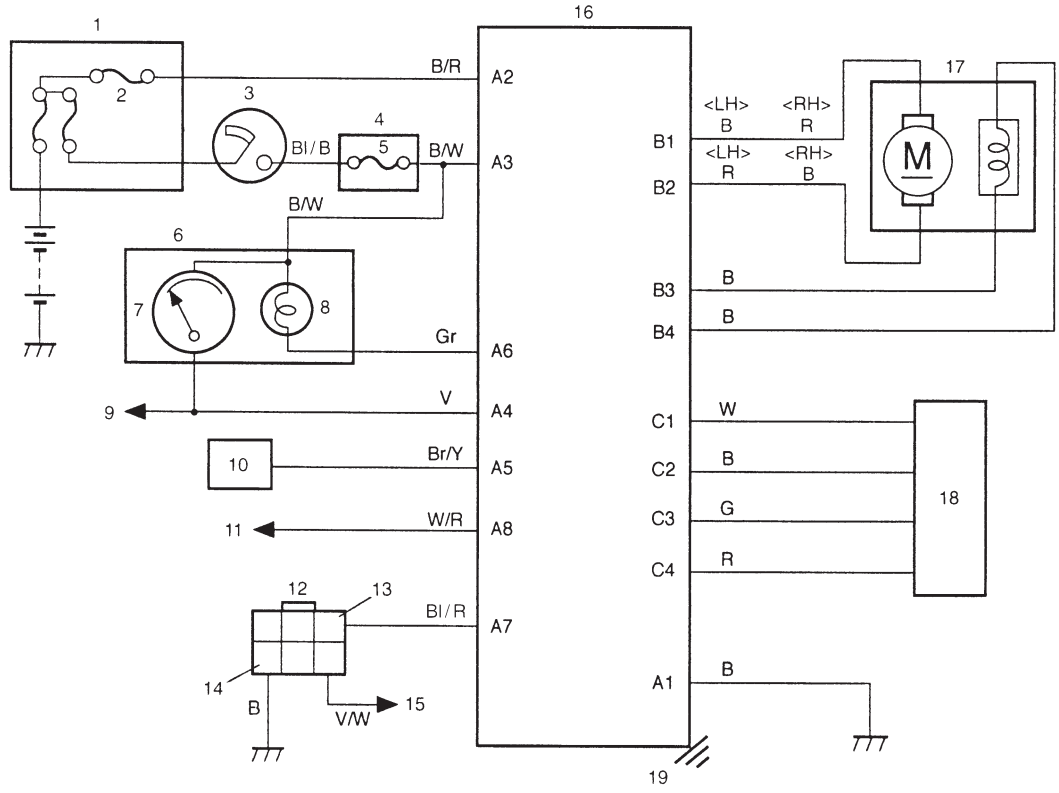

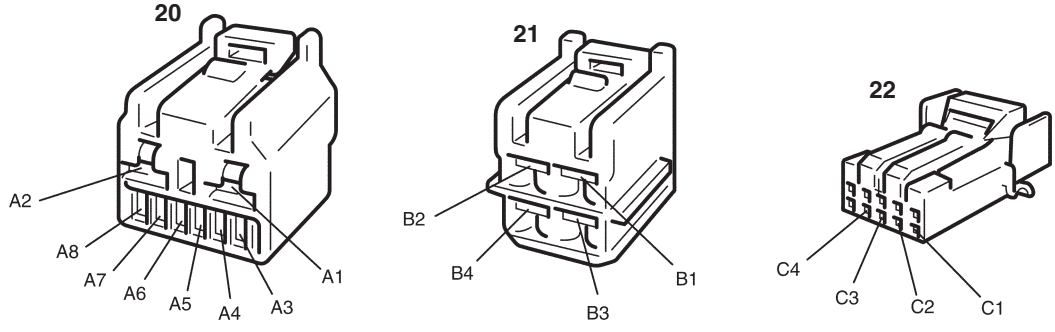

1. Main fuse box
2. “EPS” fuse (30 A)
3. Ignition switch
4. Circuit fuse box
5. “IG coil” fuse (15A)
6. Combination meter
7. Speedometer
8. “EPS” warning lamp
9. To vehicle speed sensor (VSS)
10. ECM / PCM
11. To data link connector (DLC)
12. Monitor coupler
13. Diagnosis switch terminal (for P / S system)
14. Ground terminal
15. To ABS hydraulic unit / control module assembly (if equipped)
16. P / S control module
17. Motor assembly (with clutch incorporated)
18. Torque sensor
19. P / S control module body ground
20. Connector “A”
21. Connector “B”
22. Connector “C”

DIAGNOSIS

The P/S system in this vehicle are controlled by P/S control module. P/S control module has an on-board diagnostic system which detects a malfunction in this system.
When diagnosing troubles, be sure to have full understanding of the outline of “ON-BOARD DIAGNOSTIC SYSTEM” and each item in “PRECAUTION IN DIAGNOSING TROUBLE” and execute diagnosis according to “SYSTEM CHECK FLOW TABLE”.

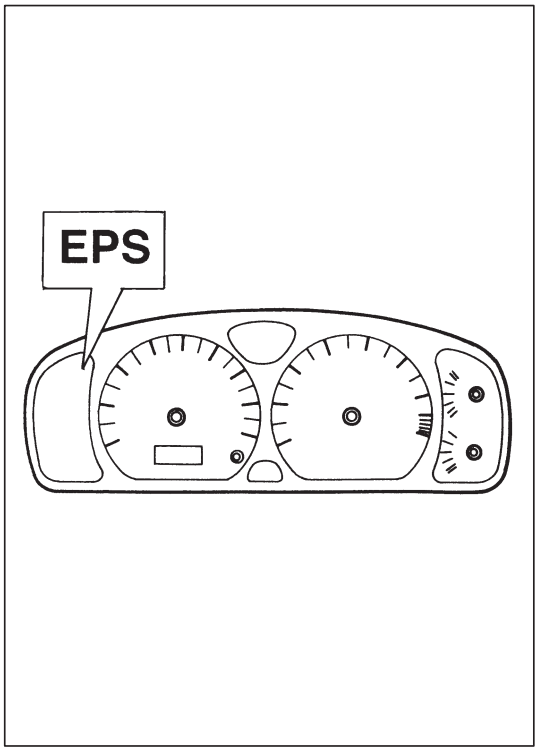

ON-BOARD DIAGNOSTIC SYSTEM

P/S control module performs on-board diagnosis (self-diagnosis) on the system and operates “EPS” warning lamp as follows.

- “EPS” warning lamp lights when the ignition switch is turned to ON position (but the engine at stop) regardless of the condition of P/S system. This is only to check “EPS” warning lamp bulb and its circuit.
- If the areas monitored by P/S control module is free from any trouble after the engine start (while engine is running),“EPS” warning lamp turns OFF.
- When P/S control module detects a trouble which has occurred in the areas, it makes “EPS” warning lamp turn ON while the engine is running to warn the driver of such occurrence of trouble and at the same time it stores the exact trouble area in P/S control module memory. The trouble area is shown as Diagnostic Trouble Code (DTC) and it can be read referring to “DTC CHECK” in this section.

PRECAUTIONS IN DIAGNOSING TROUBLES

- Take a note of DTC indicated first.
- Be sure to read “PRECAUTIONS FOR ELECTRONIC CIRCUIT SERVICE” in SECTION 0A before inspection and observe what is written there.
- DTC C1122 (flashing pattern: 22) (engine speed signal fail) is indicated when ignition switch is ON position and engine is not running but if indication changes to a normal one when engine is started, it means nothing abnormal.
- As DTC is stored in memory of P/S control module, be sure to clear memory after repair by performing the procedure described in “DTC CLEARANCE”.

SYSTEM CHECK FLOW TABLE

STEP	ACTION	YES	NO
1	1) Record details of the problem (failure, complaint) and how it occurred as described by the customer. For this purpose, use of such a questionnaire form as shown below will facilitate collecting information to the point required for proper analysis and diagnosis. 2) Check if what the customer claimed in CUSTOMER QUESTIONNAIRE is actually found in the vehicle and If that symptom is found, whether it is identified as a failure. (This step should be shared with the customer if possible.) 3) Perform “EPS” WARNING LAMP CIRCUIT CHECK FLOW TABLE in this section. 4) Check DTC referring to “DTC CHECK” in this section and record the DTC(s). 5) Clear DTC if any malfunction DTC exists referring to “DTC CLEARANCE” in this section, then recheck DTC. Is any malfunction DTC detected?	Go to Step 2.	Go to Step 3.
2	1) Inspect and repair referring to applicable “DTC TABLE” in this section. 2) Clear DTC referring to “DTC CLEARANCE” in this section. Does the trouble recur?	Go to Step 5.	Go to Step 4.
3	1) Test drive the vehicle and turn steering wheel fully to the right and left during test driving. See WARNING 1. Check if any trouble exists. 2) Inspect and repair basic parts referring to “DIAGNOSIS CHART” in SECTION 3. 3) If the trouble cannot be repaired in Step 3-2), inspect and repair referring to “TROUBLE DIAGNOSIS (FOR TROUBLE NOT INDICATED BY ON-BOARD DIAGNOSTIC SYSTEM)” in this section. Does the trouble recur?	Go to Step 5.	Go to Step 4.
4	1) Confirm that the problem symptom has gone and P/S system is free from any abnormal conditions. If what has been repaired is related to the malfunction DTC, clear the DTC once and perform test driving as in Step 3-1) and confirm that no DTC is indicated. Is any malfunction DTC detected?	Go to Step 5.	END
5	Check DTC referring to “DTC CHECK” in this section. Is any malfunction DTC detected?	Go to Step 2.	Go to Step 3.

WARNING 1:
Carry out driving test in very little traffic area to prevent an accident.

CUSTOMER QUESTIONNAIRE (EXAMPLE)

Customer's name:	Model:	VIN:	
Date of issue:	Date Reg.:	Date of problem:	Mileage:

Problem Symptoms	● Steering wheel feels heavy ● Vehicle pulls to one side during straight driving ● Poor recovery from turns ● Too much play in steering ● Abnormal noise while vehicle is running: from motor, from rack and pinon, other _____ ● Other:
Frequency of occurrence	● Continuous/Intermittent (times a day, a month)/ other _____
Conditions for Occurrence of Problem	● Vehicle at stop & ignition switch is ON position: ● When starting: at initial start only/at every start/Other _____ ● Vehicle speed: while accelerating/while decelerating/at stop/ while turning/while running at constant speed/ other _____ ● Road surface condition: Paved road/rough road/snow-covered road other _____ ● Chain equipment:
Environmental Condition	● Weather: fair/cloudy/rain/snow/other _____ ● Temperature: °C (°F)
Diagnostic Trouble Code	● First check: Normal code/malfunction code ( ) ● Second check after test drive: Normal code/malfunction code ( )

“EPS” WARNING LAMP CIRCUIT CHECK FLOW TABLE

CAUTION:
Be sure to perform “SYSTEM CHECK FLOW TABLE” before starting diagnosis according to flow table.

STEP	ACTION	YES	NO
1	1) Make sure that battery voltage is about 11 V or higher. 2) Note “EPS” warning lamp as ignition switch is turned to ON position. Does “EPS” warning lamp come ON when ignition switch is turned to ON position?	Go to Step 2.	Proceed to “TABLE-A “EPS” WARNING LAMP DOES NOT LIGHT”.
2	Does “EPS” warning lamp flash?	Proceed to “TABLE-B “EPS” WARNING LAMP FLASHES”.	Go to Step 3.
3	1) Using service wire short diagnosis switch terminal to ground terminal on monitor coupler. 2) Turn ignition switch to ON position. Does “EPS” warning lamp indicate DTC No.22 (flashing pattern: 22) and/or other code flashing pattern?	“EPS” warning lamp circuit is good condition.	Proceed to “TABLE-C “EPS” WARNING LAMP REMAINS ON”.

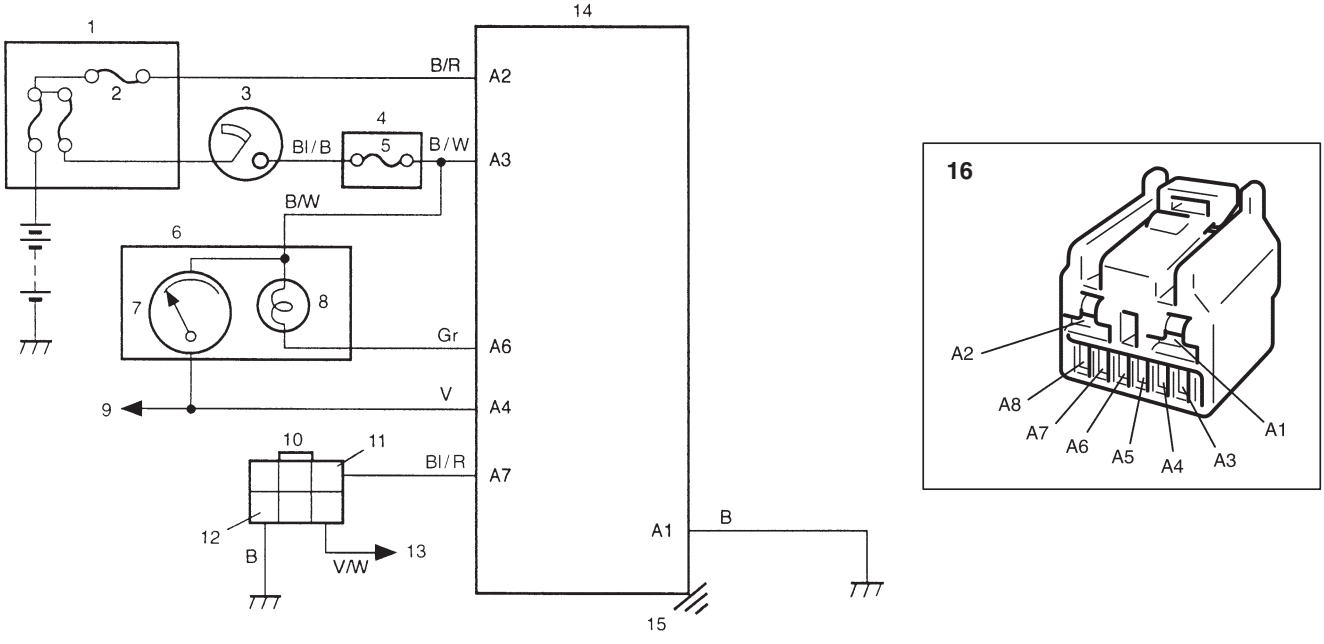

1. Main fuse box
2. “EPS” fuse (30 A)
3. Ignition switch
4. Circuit fuse box
5. “IG coil” fuse (15A)
6. Combination meter
7. Speedometer
8. “EPS” warning lamp
9. To vehicle speed sensor (VSS)
10. Monitor coupler
11. Diagnosis switch terminal (for P/S system)
12. Ground terminal
13. To ABS hydraulic unit/control module assembly (if equipped)
14. P/S control module
15. P/S control module body ground
16. Connector “A”

TABLE-A “EPS” WARNING LAMP DOES NOT LIGHT

STEP	ACTION	YES	NO
1	Was “SYSTEM CHECK FLOW TABLE” performed?	Go to Step 2.	Go to “SYSTEM CHECK FLOW TABLE” in this section.
2	Are “EPS” fuses in good condition?	Go to Step 3.	Check short to ground in “B/R” (for “EPS” fuse) wire, and then replace fuse.
3	1) Remove steering column hole cover. 2) Disconnect 8-pin (“A”) connector from P/S control module. 3) Check proper connection to P/S control module at terminal “A2”. 4) If OK, check voltage between “A2” and body ground. Is it 10 – 14 V?	Go to Step 4.	Repair high resistance or open in “B/R” wire circuit.
4	1) Check proper connection to P/S control module at terminal “A3”. 2) If OK, turn ignition switch to ON position. 3) Check voltage between “A3” and body ground. Is it 10 – 14 V?	Go to Step 5.	Repair high resistance or open in “B/W” wire circuit.
5	1) Turn ignition switch to OFF position. 2) Remove combination meter. 3) Remove and check “EPS” bulb. Is “EPS” bulb in good condition?	Go to Step 6.	Replace bulb.
6	1) Check voltage between “A6” terminal and body ground with “EPS” bulb disconnected. Is it 10 – 14 V?	Repair short to power circuit in “EPS” light (“Gr” wire) circuit.	Go to Step 7.
7	1) Install “EPS” bulb and combination meter. 2) Check proper connection to P/S control module at terminal “A6”. 3) If OK, short “A6” terminal to body ground with “A” connector disconnected. Does “EPS” light turn ON at ignition switch is ON position?	Go to Step 8.	Repair high resistance or open in “EPS” light (“Gr” wire) circuit.
8	1) Check P/S control module is installed to steering column assembly securely (check for body ground of P/S control module). 2) If OK, check resistance between “A1” terminal and body ground. Is resistance 1 Ω or less?	Substitute a known-good P/S control module and recheck.	Repair poor ground (“B” wire) circuit.

Fig. for Step 3

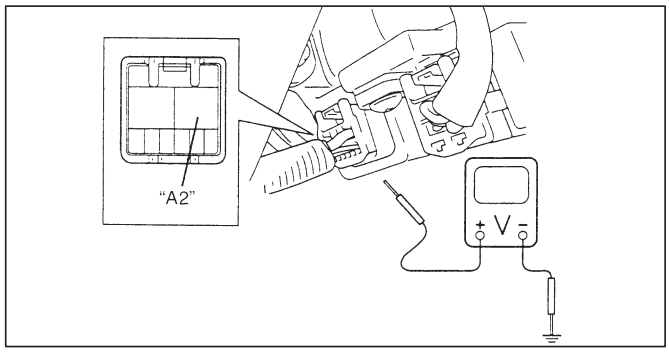

Fig. for Step 4

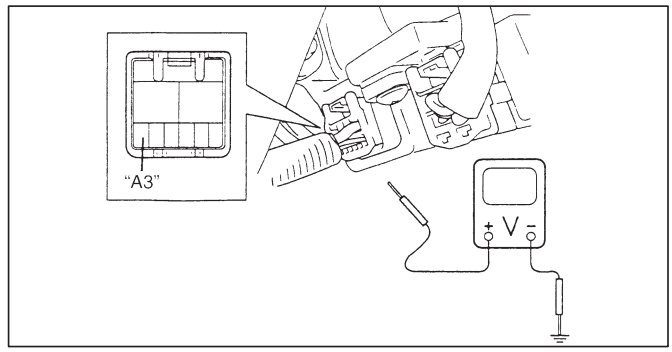

Fig. for Step 6

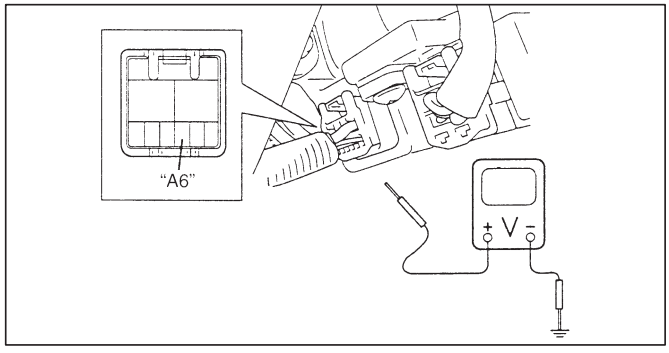

Fig. for Step 7

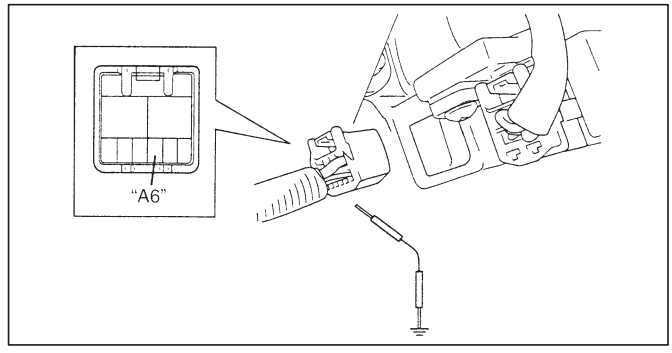

Fig. for Step 8

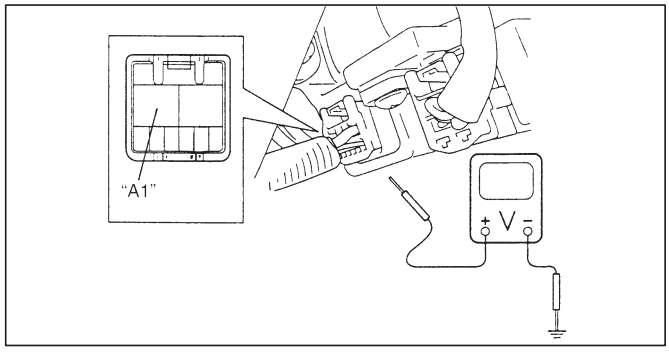

TABLE-B “EPS” WARNING LAMP FLASHES

STEP	ACTION	YES	NO
1	Was “SYSTEM CHECK FLOW TABLE” performed?	Go to Step 2.	Go to “SYSTEM CHECK FLOW TABLE” in this section.
2	1) Check monitor coupler for P/S system. Is it connected diagnosis switch terminal for P/S system and ground terminal in monitor coupler by service wire?	Remove service wire.	Go to Step 3.
3	1) With ignition switch OFF, disconnect 8-pin (“A”) connector from P/S control module. 2) Measure resistance between “A7” terminal of “A” connector and body ground. Is resistance 1 Ω or less?	Repair short from “BI/W” wire circuit to ground.	Substitute a known-good P/S control module and recheck.

Fig. for Step 2

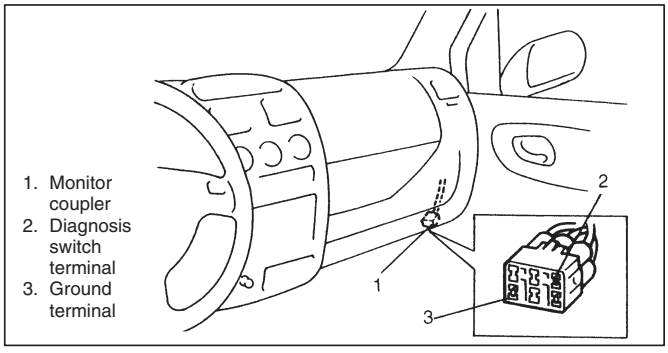

Fig. for Step 3

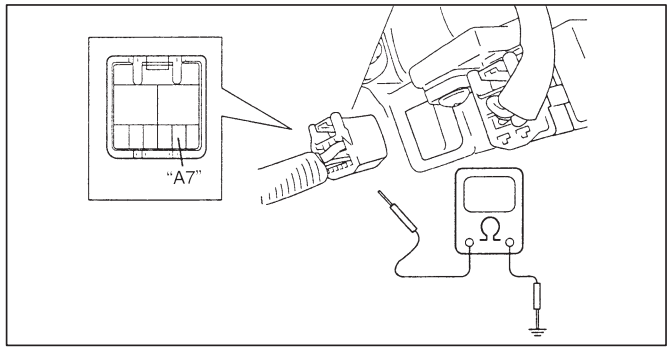

TABLE-C "EPS" WARNING LAMP REMAINS ON (EVEN THOUGH DIAGNOSIS SWITCH TERMINAL GROUNDED)

STEP	ACTION	YES	NO
1	Was "SYSTEM CHECK FLOW TABLE" performed?	Go to Step 2.	Go to "SYSTEM CHECK FLOW TABLE" in this section.
2	1) Short diagnosis switch terminal to body ground by service wire. Does "EPS" warning lamp turn ON with ignition switch ON position?	Repair high resistance or open in ground ("B" wire) circuit on monitor coupler.	Go to Step 3.
3	1) Turn ignition switch to OFF position. 2) Remove steering column lower cover. 3) Disconnect 8-pin ("A") connector from P/S control module. 4) Check proper connection to P/S control module at terminal "A7". 5) If OK, check resistance between "A7" terminal and "BI/W" wire terminal on monitor coupler. Is resistance 1 Ω or less?	Go to Step 4.	Repair high resistance or open in "BI/W" wire circuit.
4	1) Check proper connection to P/S control module at terminal "A6". 2) If OK, turn ignition switch to ON position. 3) Check voltage between "A6" and body ground. Is it 10 – 14 V?	Substitute a known-good P/S control module and recheck.	Repair short to ground in "EPS" light ("Gr" wire) circuit.

Fig. for Step 2

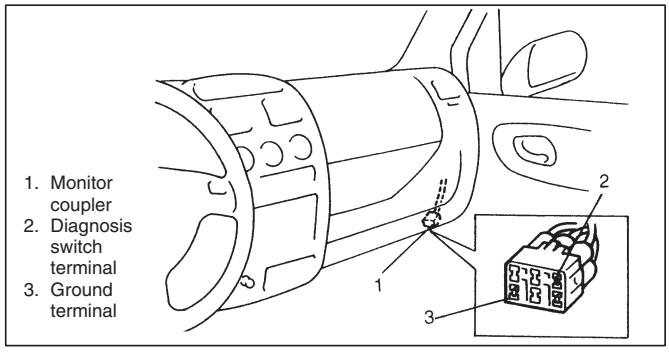

Fig. for Step 3

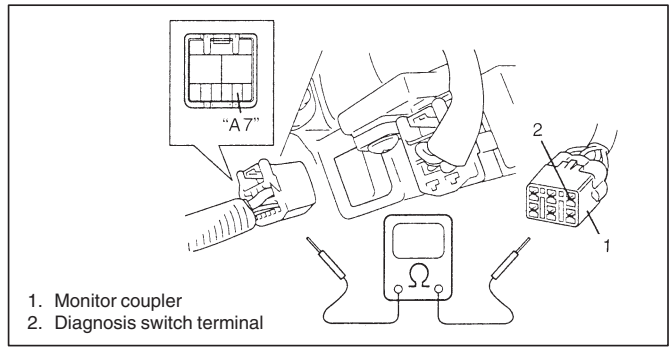

Fig. for Step 4

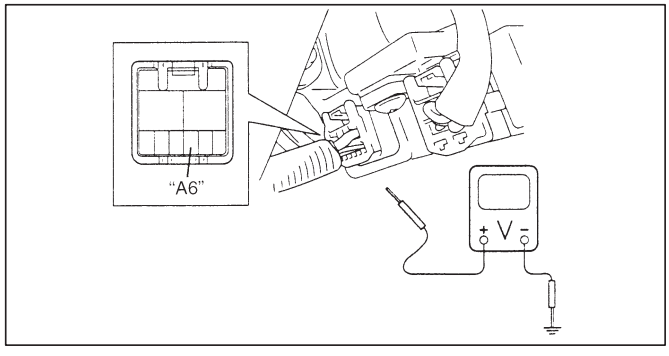

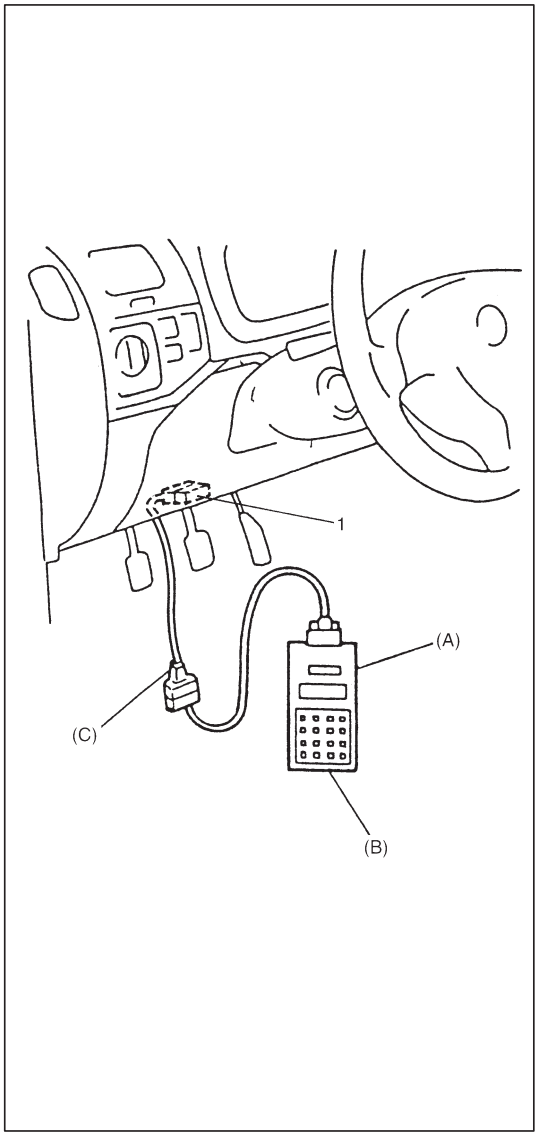

DTC CHECK

USING SUZUKI SCAN TOOL

1) Turn ignition switch to OFF position.
2) After setting cartridge, connect SUZUKI scan tool to data link connector (DLC) (1) located on underside of instrument panel at driver's seat side.

   Special Tool
   (A): 09931-76011
   (B): Mass storage cartridge
   (C): 09931-76030

3) Turn ignition switch to ON position.
4) Read DTC according to instructions displayed on SUZUKI scan tool and print it or write it down referring to SUZUKI SCAN TOOL OPERATOR'S MANUAL for further details.

   NOTE:
   If Suzuki scan tool cannot display DTC, perform "SERIAL DATA LINK CIRCUIT CHECK" described in this section.

5) After completing the check, turn ignition switch to OFF position and disconnect SUZUKI scan tool from DLC.

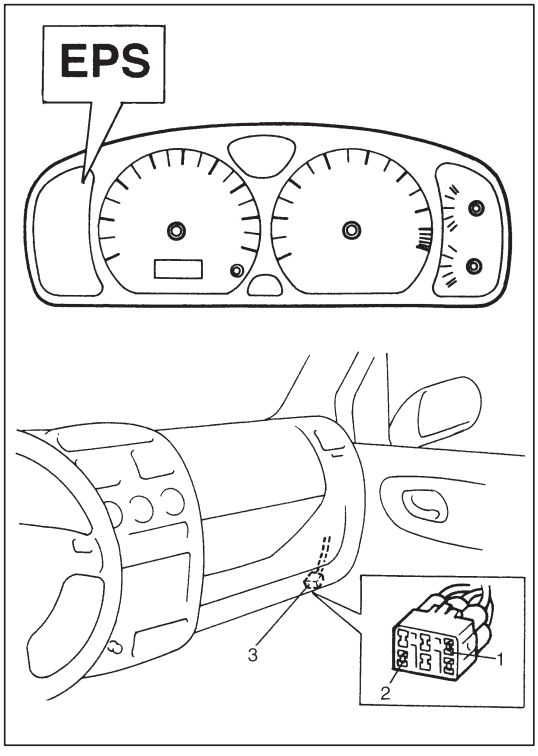

NOT USING SUZUKI SCAN TOOL

1) Check that "EPS" warning lamp comes ON when ignition switch is turned to ON position referring to "EPS" WARNING LAMP CIRCUIT CHECK FLOW TABLE.
2) Apply chocks to wheels, set shift lever to neutral position and pull parking brake fully.
3) Start engine.
4) Using service wire, short diagnosis switch terminal (1) to ground terminal (2) on monitor coupler (3).
5) Read DTC from flashing pattern of "EPS" warning lamp referring to "DTC TABLE".
6) After completing the check, turn ignition switch to OFF position disconnect service wire from monitor coupler.

Example: When VSS circuit fail (DTC C1121) is set

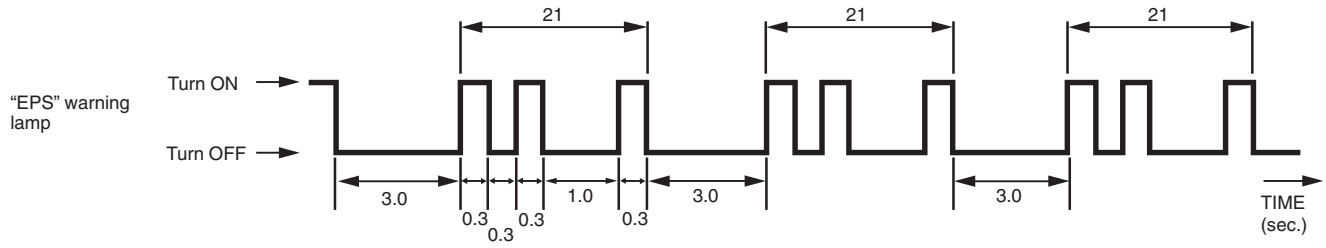

NOTE:

- **When more than 2 DTCs are stored in memory, flashing for each DTC is repeated three times starting with the smallest DTC number in increasing order.**
- **If a code not listed on the table is displayed, then the P/S control module is faulty.**
- **DTC C1122 or DTC No.22 (flashing pattern: 22) is indicated when ignition switch ON and engine not running but if NO DTC or DTC No.12 (flashing pattern: 12) is indicated when engine is started, it means nothing abnormal.**
- **Current DTC and history DTC can be identified by lighting and flashing of "EPS" warning lamp. "EPS" warning lamp operates as follow depending on the trouble condition.**

	Current DTC is set. (Abnormality exists at present.)	History DTC is set only. (Faulty condition occurred once in the past but normal condition is restored at present.)	Current DTC and history DTC exist.
"EPS" warning lamp after engine started	Remains ON.	Turns OFF.	Remains ON.
"EPS" warning lamp when shorting diagnosis switch terminal and ground terminal	Displays current DTC.	Displays history DTC.	Displays current DTC and history DTC.

For identify current DTC, clear history DTC referring to "DTC CLEARANCE" in this section.

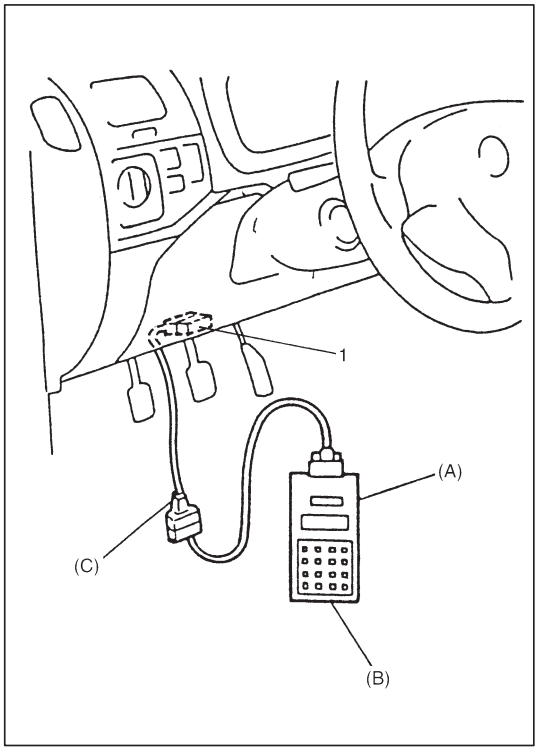

DTC CLEARANCE

USING SUZUKI SCAN TOOL

1) Turn ignition switch to OFF position.
2) After setting cartridge to SUZUKI scan tool, connect scan tool to data link connector (DLC) (1) located on underside of instrument panel at driver's seat side.

   Special Tool
   (A): 09931-76011
   (B): Mass storage cartridge
   (C): 09931-76030

3) Turn ignition switch to ON position.
4) Erase DTC according to instructions displayed on SUZUKI scan tool referring to "SUZUKI SCAN TOOL OPERATOR'S MANUAL" for further details.
5) After completing the check, turn ignition switch to OFF position and disconnect SUZUKI scan tool from DLC.

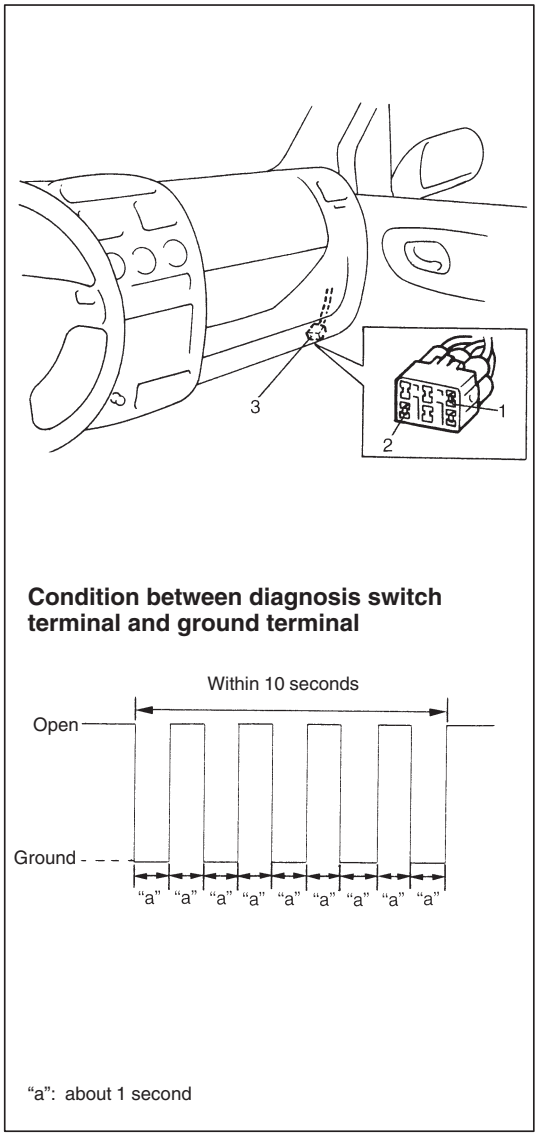

NOT USING SUZUKI SCAN TOOL

1) Turn ignition switch to ON position.
2) Using service wire, repeat shorting and opening between diagnosis output terminal (1) and ground terminal (2) on monitor coupler (3) at least 5 times at about 1 second intervals within 10 seconds.

SERIAL DATA LINK CIRCUIT CHECK

CAUTION:
Be sure to perform "SYSTEM CHECK FLOW TABLE" before starting diagnosis according to flow table.

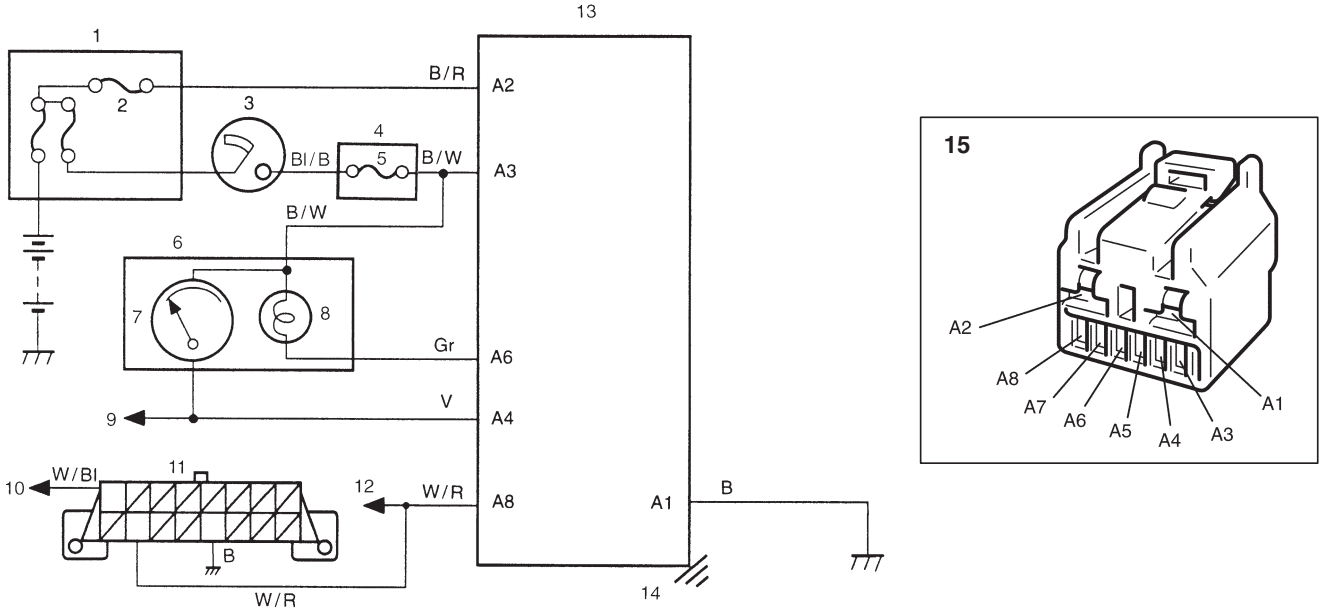

1. Main fuse box
2. "EPS" fuse (30 A)
3. Ignition switch
4. Circuit fuse box
5. "IG coil" fuse (15A)
6. Combination meter
7. Speedometer
8. "EPS" warning lamp
9. To vehicle speed sensor (VSS)
10. To main fuse box
11. Data link connector (DLC)
12. To ECM/PCM, SDM and ABS hydraulic unit/control module assembly (if equipped)
13. P/S control module
14. P/S control module body ground
15. Connector "A"

DIAGNOSTIC FLOW TABLE

STEP	ACTION	YES	NO
1	Was “SYSTEM CHECK FLOW TABLE” performed?	Go to Step 2.	Go to “SYSTEM CHECK FLOW TABLE” in this section.
2	1) Make sure that SUZUKI scan tool is free from malfunction and correct cartridge for P/S system is used. 2) Turn ignition switch to OFF position. 3) Check proper connection of SUZUKI scan tool to DLC. Is connection in good condition?	Go to Step 3.	Properly connect SUZUKI scan tool to DLC.
3	1) Check if communication is possible by trying communication with other controller (ECM/PCM, ABS hydraulic unit/control module assembly (if equipped) or SDM). Is it possible to communicate with other controller?	Go to Step 4.	Repair open in common section of serial data circuit (“W/R” wire circuit) used by all controllers or short to ground or power circuit which has occurred somewhere in serial data circuit (“W/R” wire circuit).
4	1) With ignition switch is OFF position, disconnect 8-pin (“A”) connector from P/S control module. 2) Check proper connection at “A8” (“W/R” wire) terminal for serial data circuit. 3) If OK, then check resistance between “A8” (“W/R” wire) terminal and “W/R” wire terminal for serial data circuit in DLC. Is resistance 1 Ω or less?	Substitute a known-good P/S control module and recheck.	Repair high resistance or open in “W/R” wire circuit for P/S system.

Fig. for Step 4

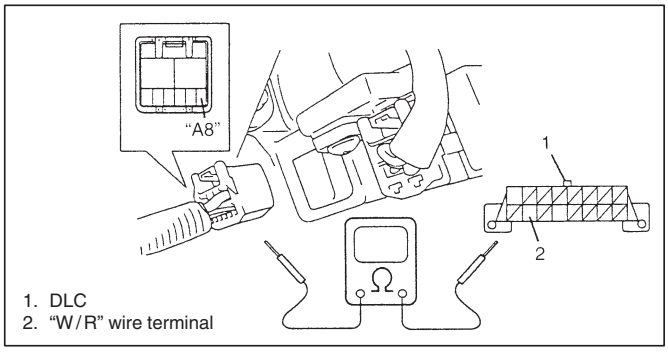

DTC TABLE

CAUTION:
Be sure to perform "SYSTEM CHECK FLOW TABLE" before starting diagnosis according to flow table of each DTC.

DTC	"EPS" light flashing pattern		DIAGNOSTIC ITEM	DIAGNOSIS
	No.	Model		
NO DTC	12		Normal	This code appears when none of the other codes are identified.
C1111	11		Torque sensor	Diagnose trouble according to "DIAGNOSTIC FLOW TABLE" corresponding to each code No.
C1113	13			
C1114	14			
C1115	15			
C1121	21		VSS signal	
C1123	23			
C1124	24			
C1122	22		Engine speed signal	
C1141	41		Motor	
C1142	42			
C1143	43			
C1144	44			
C1145	45			
C1151	51		Clutch	
C1152	52		P/S control module	
C1154	54			
C1155	55			
C1153	53		P/S control module power supply	

DTC C1111 TORQUE SENSOR MAIN CIRCUIT FAIL
DTC C1113 TORQUE SENSOR MAIN AND SUB CIRCUIT FAIL
DTC C1115 TORQUE SENSOR SUB CIRCUIT FAIL

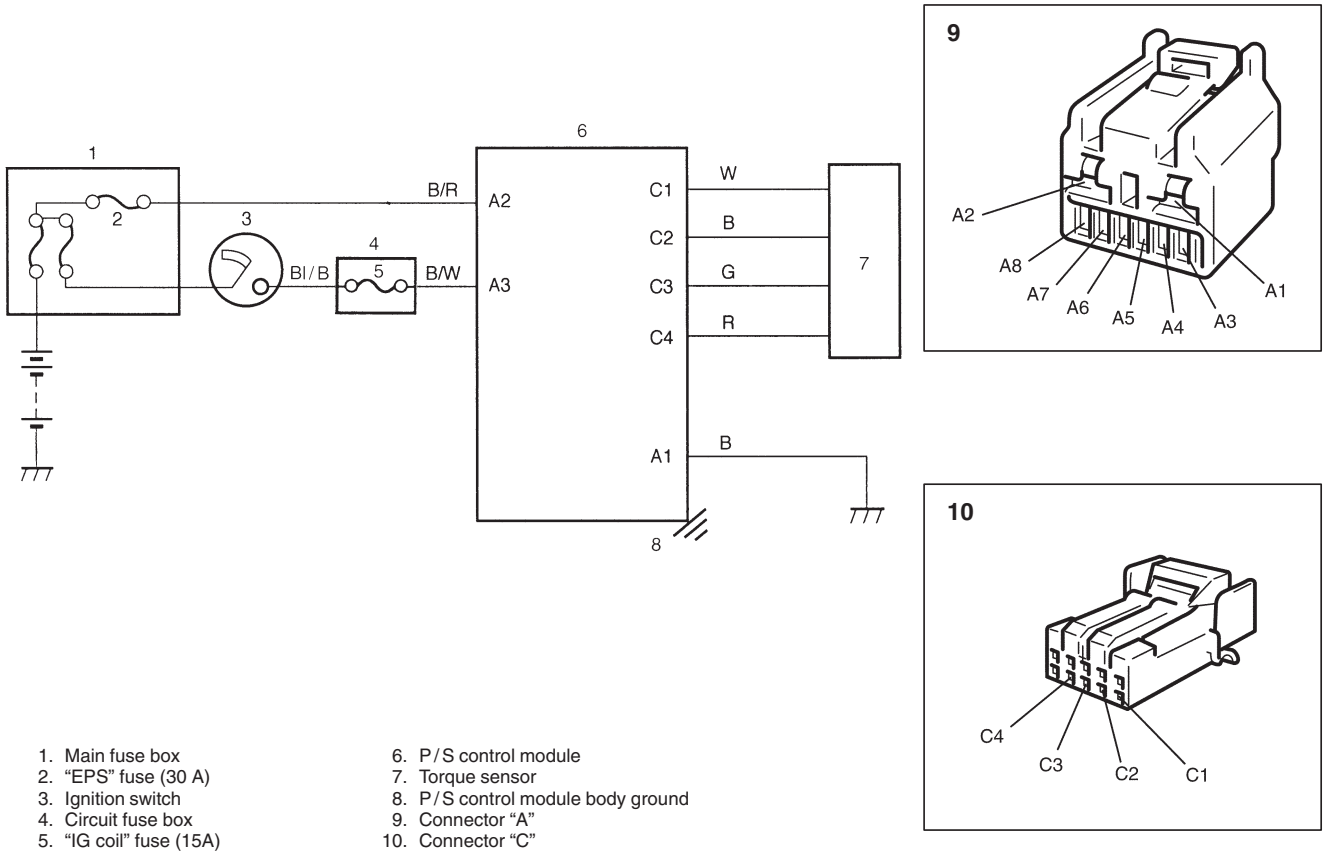

1. Main fuse box
2. “EPS” fuse (30 A)
3. Ignition switch
4. Circuit fuse box
5. “IG coil” fuse (15A)
6. P/S control module
7. Torque sensor
8. P/S control module body ground
9. Connector “A”
10. Connector “C”

STEP	ACTION	YES	NO
1	Was “SYSTEM CHECK FLOW TABLE” performed?	Go to Step 2.	Go to “SYSTEM CHECK FLOW TABLE” in this section.
2	Is DTC C1114 indicated?	Proceed to “DTC C1114 TORQUE SENSOR 5 V POWER SUPPLY CIRCUIT FAIL” in this section.	Go to Step 3.
3	1) Remove steering column hole cover. 2) Check proper connection for 5-pin (“C”) connector to P/S control module. 3) If OK, check torque sensor and its circuit referring to “ON-VEHICLE INSPECTION” of “TORQUE SENSOR”. Is torque sensor in good condition?	Substitute a known-good P/S control module and recheck.	Replace torque sensor and recheck.

DTC C1114 TORQUE SENSOR 5V POWER SUPPLY CIRCUIT FAIL

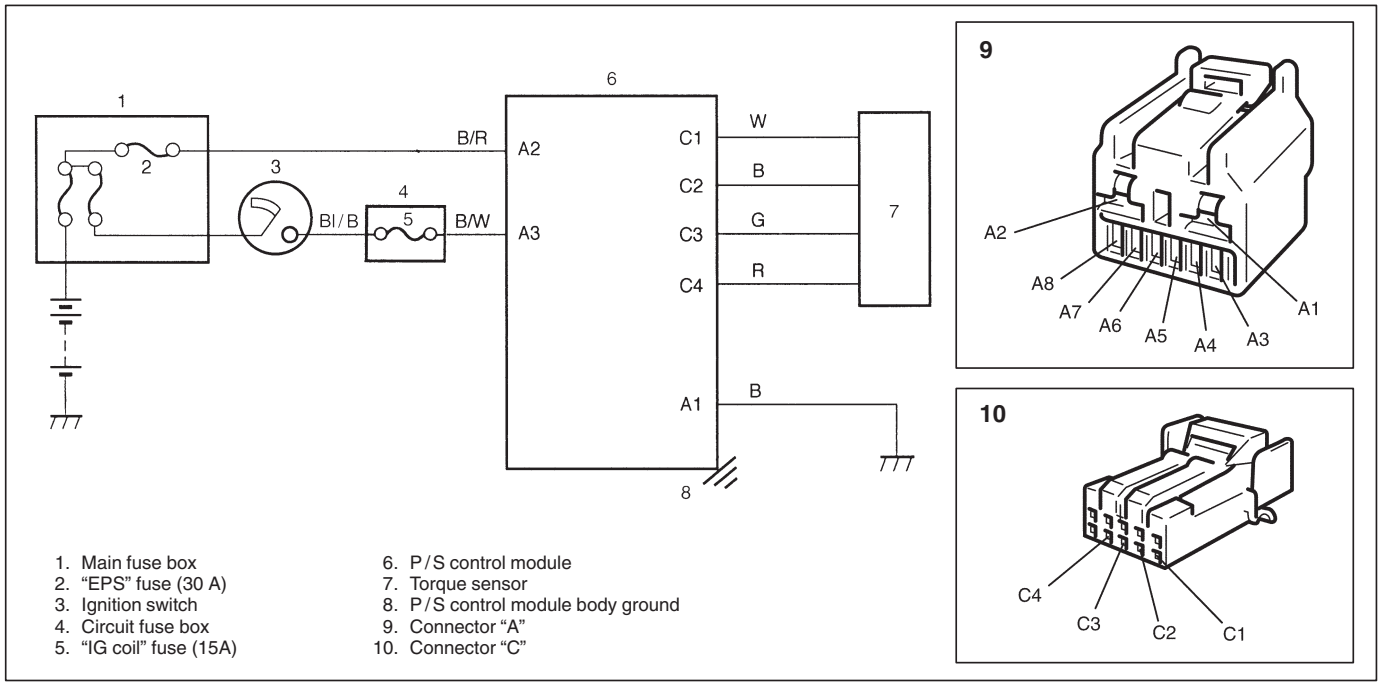

STEP	ACTION	YES	NO
1	Was "SYSTEM CHECK FLOW TABLE" performed?	Go to Step 2.	Go to "SYSTEM CHECK FLOW TABLE" in this section.
2	1) Remove steering column hole cover. 2) Check proper connection for 5-pin ("C") connector to P/S control module. 3) If OK, turn ignition switch to ON position. 4) Check voltage between "C4" ("R" wire) terminal of 5-pin ("C") connector and body ground with "C" connector connected to P/S control module. Is it about 5 V?	Go to Step 3.	Repair high resistance, open or short to power circuit or ground in 5 V power supply ("R" wire) circuit.
3	1) Check torque sensor and its circuit referring to "ON-VEHICLE INSPECTION" of "TORQUE SENSOR". Is torque sensor in good condition?	Substitute a known-good P/S control module and recheck.	Replace torque sensor and recheck.

Fig. for Step 2

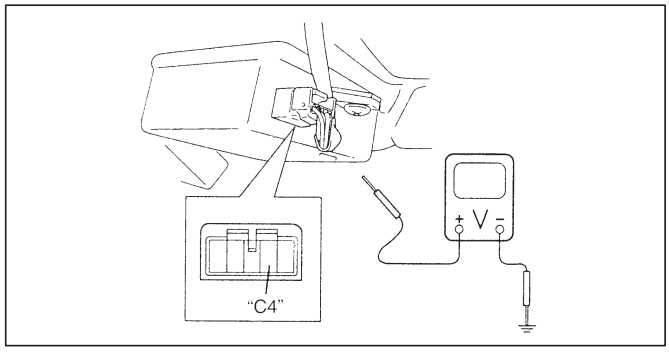

DTC C1121/C1123/C1124 VSS CIRCUIT FAIL

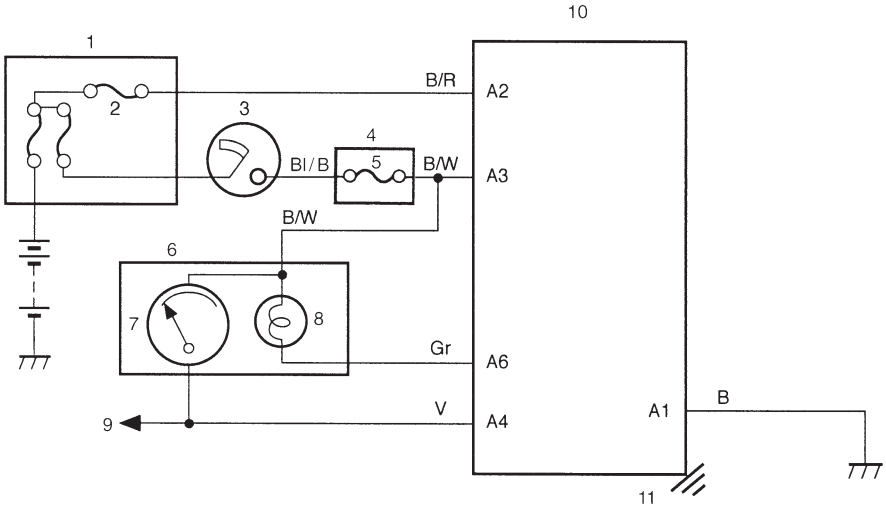

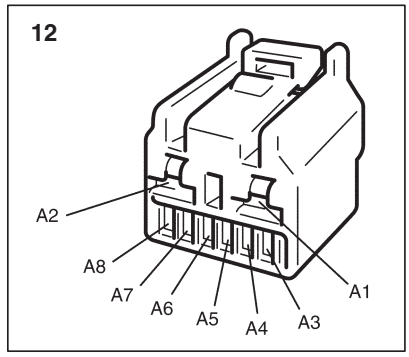

1. Main fuse box
2. "EPS" fuse
3. Ignition switch
4. Circuit fuse box
5. "IG coil" fuse (15A)
6. Combination meter
7. Speedometer
8. "EPS" warning lamp
9. To vehicle speed sensor (VSS)
10. P/S control module
11. P/S control module body ground
12. Connector "A"

STEP	ACTION	YES	NO
1	Was "SYSTEM CHECK FLOW TABLE" performed?	Go to Step 2.	Go to "SYSTEM CHECK FLOW TABLE" in this section.
2	1) Ignition switch to OFF position. 2) Remove steering column hole cover. 3) Disconnect 8-pin ("A") connector from P/S control module. 4) Check proper connection to P/S control module at terminal "A4" ("V" wire). 5) If OK, connect voltmeter between "A4" ("V" wire) terminal and body ground with "A" connector connected. 6) Hoist front end of vehicle and lock front right tire. 7) Turn front left tire quickly with ignition switch is ON position. Does voltmeter indicated deflection between 0 – 1 V and 9 – 11 V a few times while tire is turned one revolution?	Check intermittent trouble referring to "INTERMITTENT TROUBLE" in SECTION 0A. If OK, substitute a known-good P/S control module and recheck.	Repair VSS or its ("V" wire) circuit referring to SECTION 6E.

Fig. for Step 2

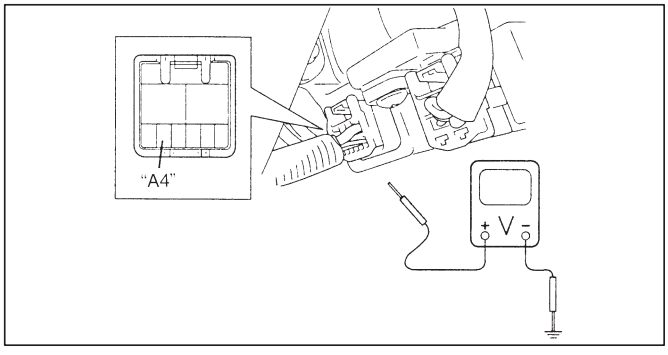

DTC C1122 ENGINE SPEED SIGNAL CIRCUIT FAIL

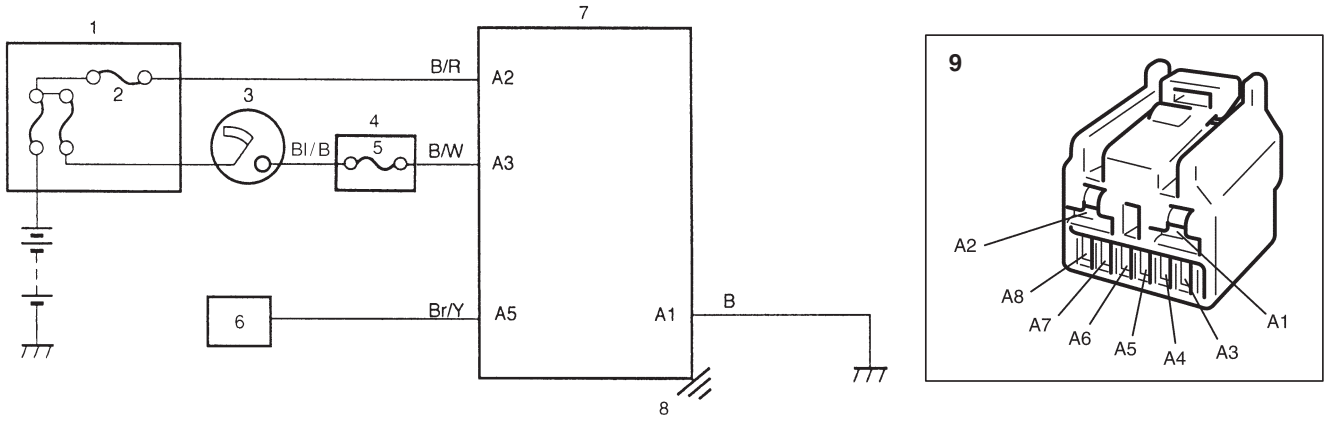

1. Main fuse box
2. "EPS" fuse (30 A)
3. Ignition switch
4. Circuit fuse box
5. "IG coil" fuse (15A)
6. ECM/PCM
7. P/S control module
8. P/S control module body ground
9. Connector "A"

STEP	ACTION	YES	NO
1	Was "SYSTEM CHECK FLOW TABLE" performed?	Go to Step 2.	Go to "SYSTEM CHECK FLOW TABLE" in this section.
2	1) Recheck DTC with engine running. Is DTC C1122 indicated?	Go to Step 3.	It is nothing abnormal for DTC C1122. System is in normal condition.
3	1) Check proper connection to P/S control module and ECM/PCM at each "Br/Y" wire terminal (P/S control module side: "A5" terminal, ECM/PCM side: Refer to "WIRING DIAGRAM" in SECTION 6E), then check intermittent trouble referring to "INTERMITTENT TROUBLE" in SECTION 0A. Is check result in good condition?	Go to Step 4.	Repair poor connection or intermittent trouble.
4	1) See NOTE 1 describe below. 2) Using SUZUKI scan tool, read data list for P/S system referring to "SUZUKI SCAN TOOL OPERATOR'S MANUAL". 3) Check engine speed. Is proper engine speed indicated?	Substitute a known-good P/S control module and recheck.	Repair high resistance, open or short to power circuit or ground in "Br/Y" wire circuit. If OK, check engine speed signal of ECM/PCM.

NOTE 1:
It is necessary for SUZUKI scan tool to perform STEP 4 of this table.

DTC C1141/C1142/C1143/C1144/C1145 MOTOR CIRCUIT FAIL

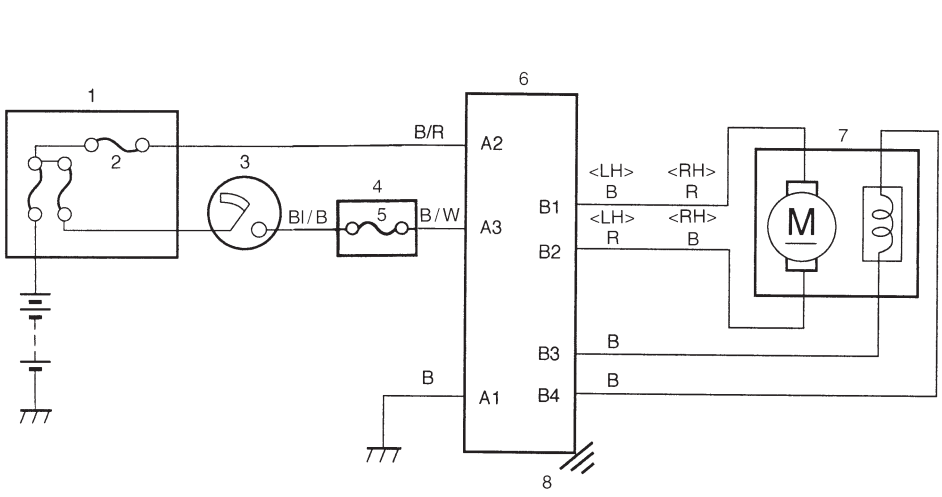

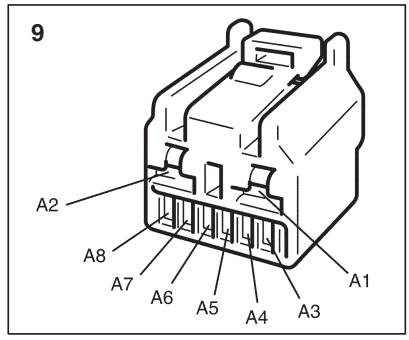

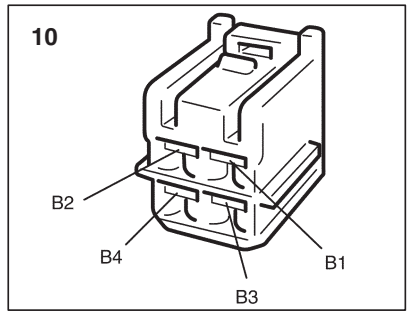

1. Main fuse box
2. "EPS" fuse (30 A)
3. Ignition switch
4. Circuit fuse box
5. "IG coil" fuse (15A)
6. P/S control module
7. Motor assembly (with clutch incorporated)
8. P/S control module body ground
9. Connector "A"
10. Connector "B"

STEP	ACTION	YES	NO
1	Was "SYSTEM CHECK FLOW TABLE" performed?	Go to Step 2.	Go to "SYSTEM CHECK FLOW TABLE" in this section.
2	1) Remove steering column hole cover. 2) Check proper connection for 4-pin ("B") connector to P/S control module. 3) If OK, start engine. 4) Check voltage between "B1" terminal and body ground and "B2" terminal and body ground with "B" connector connected to P/S control module. Are they 5 – 7 V with steering wheel held at position for vehicle to run straight?	Go to Step 3.	Repair poor connection, high resistance, open or short to power circuit or ground in "B1" or "B2" circuit.
3	1) Check motor and its circuit referring to "ON-VEHICLE INSPECTION" of "MOTOR ASSEMBLY (WITH CLUTCH INCORPORATED)". Is motor in good condition?	Substitute a known-good P/S control module and recheck.	Replace motor assembly and recheck.

Fig. for Step 2

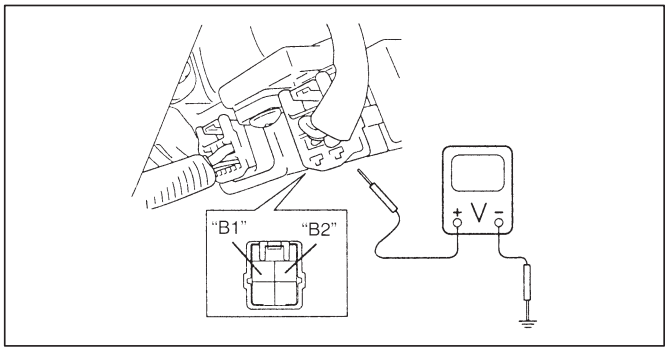

DTC C1151 CLUTCH CIRCUIT FAIL

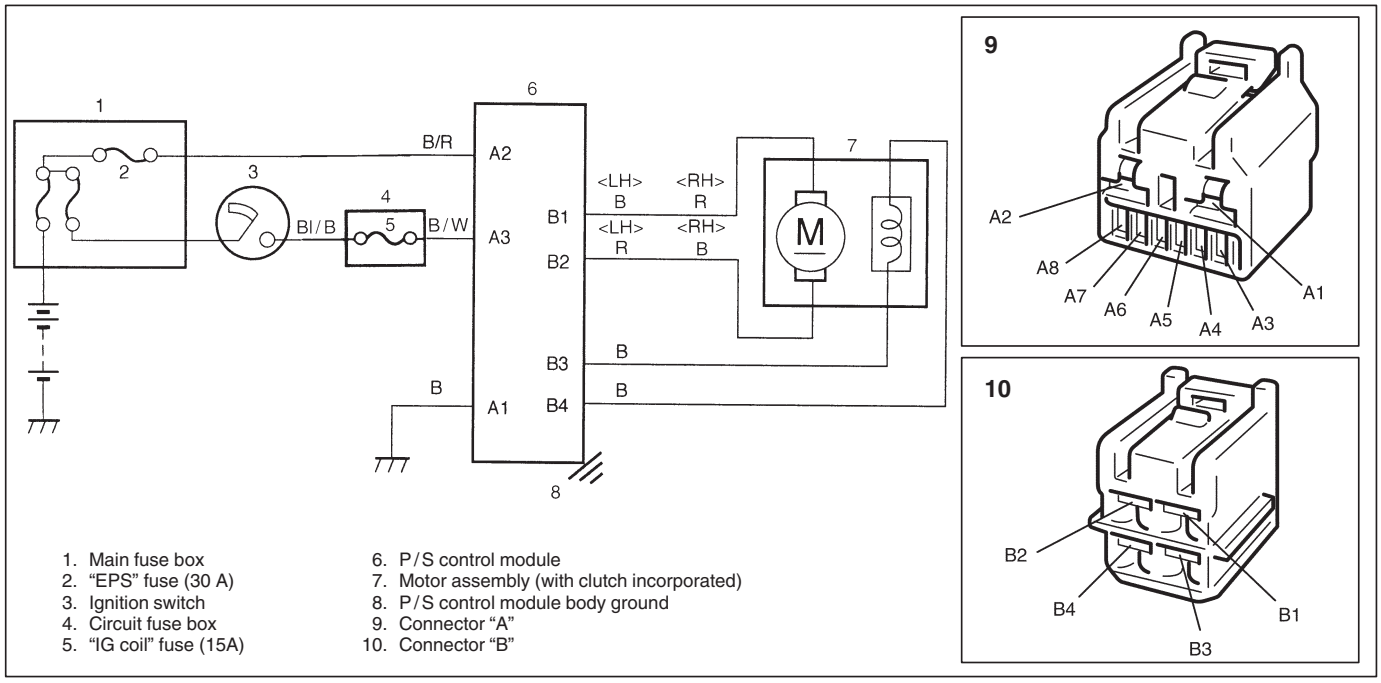

1. Main fuse box
2. "EPS" fuse (30 A)
3. Ignition switch
4. Circuit fuse box
5. "IG coil" fuse (15A)
6. P/S control module
7. Motor assembly (with clutch incorporated)
8. P/S control module body ground
9. Connector "A"
10. Connector "B"

STEP	ACTION	YES	NO
1	Was "SYSTEM CHECK FLOW TABLE" performed?	Go to Step 2.	Go to "SYSTEM CHECK FLOW TABLE" in this section.
2	1) Remove steering column hole cover. 2) Check proper connection for 4-pin ("B") connector to P/S control module. 3) If OK, start engine. 4) Check voltage between "B3" terminal and body ground with "B" connector connected to P/S control module. Is it 0 V?	Go to Step 3.	Repair poor connection, high resistance, open or short to power circuit or ground in "B3" circuit.
3	1) With engine running, check voltage between "B4" terminal and body ground with "B" connector connected to P/S control module. Is it 10 – 14 V with steering wheel held at position for vehicle to run straight?	Go to Step 4.	Repair poor connection, high resistance, open or short to power circuit or ground in "B4" circuit.
4	1) Check motor and its circuit referring to "ON-VEHICLE INSPECTION" of "MOTOR ASSEMBLY (WITH CLUTCH INCORPORATED)". Is clutch in good condition?	Substitute a known-good P/S control module and recheck.	Replace motor assembly and recheck.

Fig. for Step 2

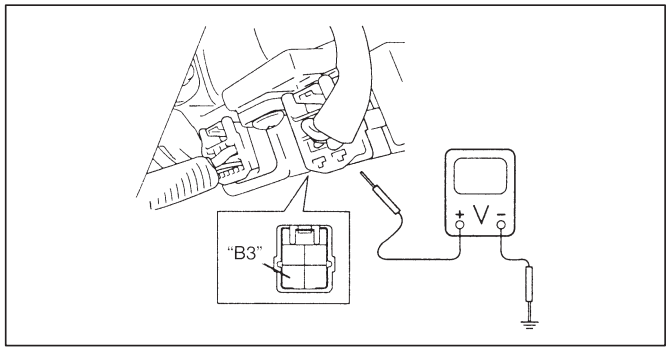

Fig. for Step 3

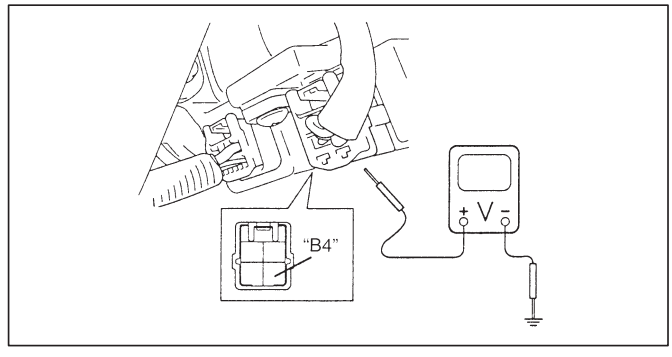

DTC C1153 P/S CONTROL MODULE POWER SUPPLY CIRCUIT FAIL

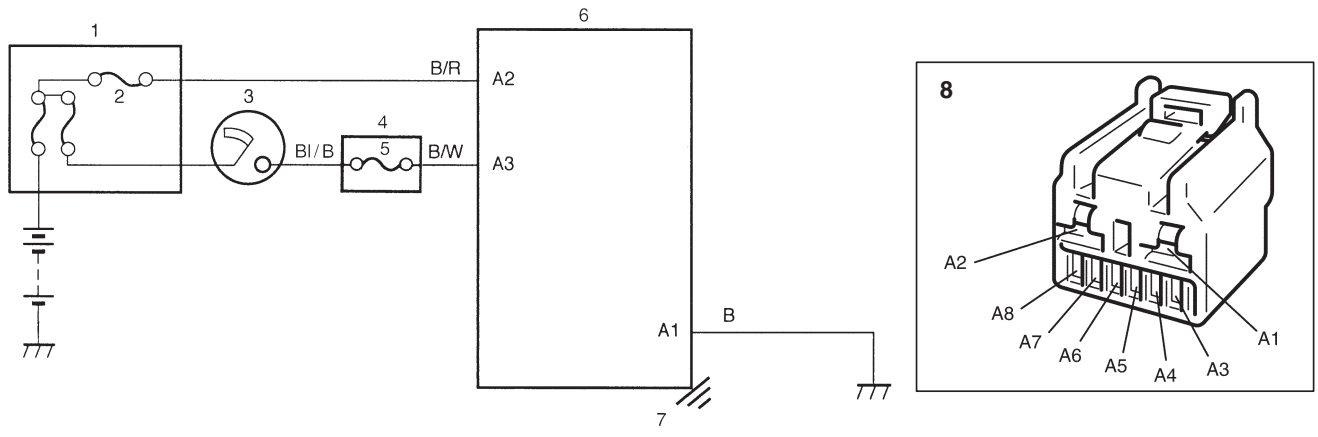

1. Main fuse box
2. "EPS" fuse (30 A)
3. Ignition switch
4. Circuit fuse box
5. "IG coil" fuse (15A)
6. P/S control module
7. P/S control module body ground
8. Connector "A"

STEP	ACTION	YES	NO
1	Was "SYSTEM CHECK FLOW TABLE" performed?	Go to Step 2.	Go to "SYSTEM CHECK FLOW TABLE" in this section.
2	1) Remove steering column hole cover. 2) Check proper connection to P/S control module at "A2" ("B/R" wire) terminal. 3) If OK, check voltage between "A2" terminal and body ground with "A" connector connected to P/S control module. Is it 10 – 14 V?	Check intermittent trouble referring to "INTERMITTENT TROUBLE" in SECTION 0A. If OK, substitute a known-good P/S control module and recheck.	Repair poor connection or high resistance in "A2" ("B/R" wire) circuit.

Fig. for Step 2

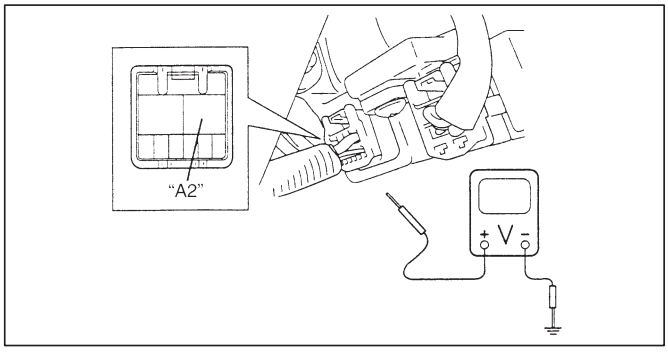

DTC C1152/C1154/C1155 P/S CONTROL MODULE FAIL

Substitute a known-good P/S control module and recheck.

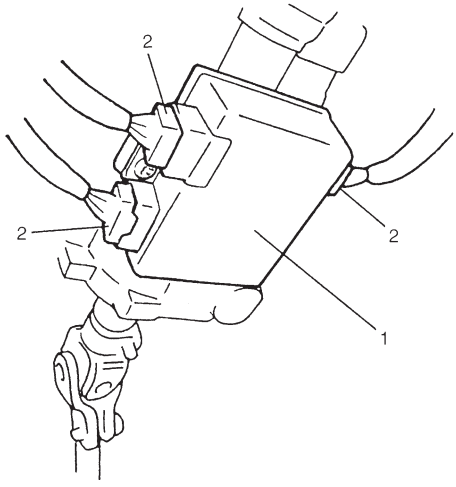

INSPECTION OF P/S CONTROL MODULE AND ITS CIRCUITS

P/S control module (1) and its circuits can be checked at P/S control module wiring couplers (2) by measuring voltage and resistance.

CAUTION:
P/S control module cannot be checked by itself. It is strictly prohibited to connect voltmeter or ohmmeter to P/S control module with coupler disconnected from it.

Voltage Check

1) Remove steering column hole cover.
2) Check that battery voltage is 11 V or more when ignition switch is ON position.
3) Check voltage at each terminal of couplers connected referring to terminal arrangement shown below and voltage table on next page.

TERMINAL ARRANGEMENT OF P/S CONTROL MODULE COUPLERS (VIEWED FROM HARNESS)

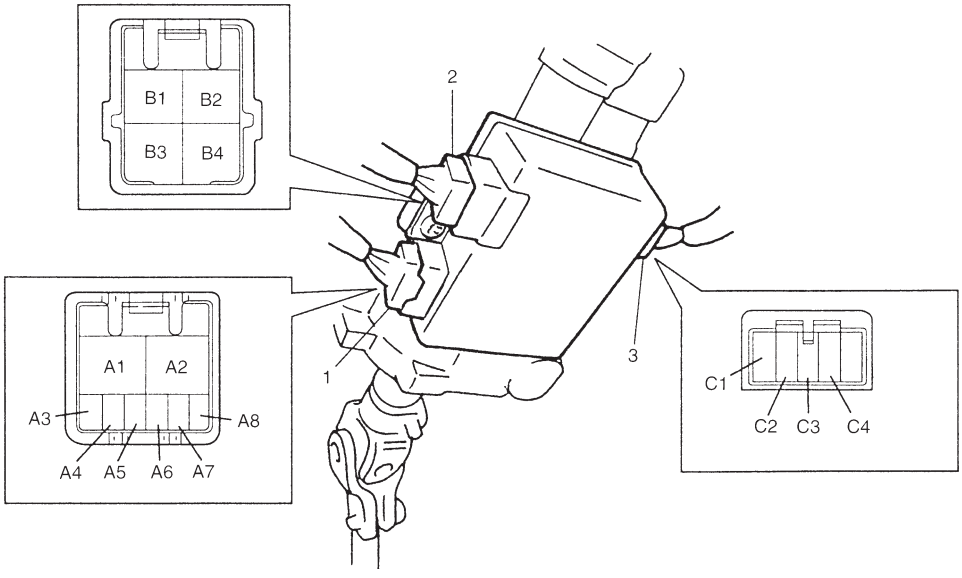

1. Connector “A”
2. Connector “B”
3. Connector “C”

TERMINAL NO.	CIRCUIT	NORMAL VOLTAGE	CONDITION
A1	Ground	–	–
A2	P/S control module power supply from battery	10 – 14 V	–
A3	P/S control module power supply from ignition switch	10 – 14 V	Ignition switch is ON position
A4	VSS	Indicator deflection repeated 0 – 1 V and 9 – 11 V	Ignition switch is ON position Front left tire turned quickly with right tire locked
A5	Engine speed signal	About 1 V	Engine idling Measured by multimeter
A6	“EPS” warning lamp	0 – 2 V	Engine idling “EPS” light ON
		10 – 14 V	Engine idling “EPS” light OFF
A7	Diagnosis switch terminal	About 5 V	Ignition switch is ON position
A8	SUZUKI scan tool	–	–
B1	Motor output 2	5 – 7 V	Engine idling and steering wheel held at position for vehicle to run straight
B2	Motor output 1	5 – 7 V	Engine idling
B3	Clutch output 2	0 V	–
B4	Clutch output 1	10 – 14 V	Engine idling
C1	Torque sensor (Main)	About 2.5 V	Ignition switch is ON position Steering wheel held at position for vehicle to run straight Check voltage between “C1” and “C3” terminals.
C2	Torque sensor (Sub)	About 2.5 V	Ignition switch is ON Steering wheel held at position for vehicle to run straight Check voltage between “C2” and “C3” terminals.
C3	Torque sensor (GND)	0 V	–
C4	5 V power supply for torque sensor	About 5 V	Ignition switch is ON position Check voltage between “C4” and “C3” terminals.

TROUBLE DIAGNOSIS (FOR TROUBLE NOT INDICATED BY ON-BOARD DIAGNOSTIC SYSTEM)

This section describes trouble diagnosis of P/S system parts whose trouble is not indicated by the on-board diagnostic system (self-diagnostic function).
When DTC No.12 (flashing pattern:12) is indicated by the on-board diagnostic system (self-diagnosis function) and assuredly those steering basic parts as described in “DIAGNOSIS CHART” in SECTION 3 are all in good condition, check the following power steering system parts which may be a possible cause for each symptom of the steering.

SYMPTOM	POSSIBLE CAUSE	INSPECTION
Steering wheel feels heavy (Perform “INSPECTION OF STEERING FORCE” on next page before diagnosis.)	● Steering wheel installed improperly (twisted)	Install steering wheel correctly.
	● Poor performance of torque sensor	Check torque sensor referring to “ON-VEHICLE INSPECTION” of “TORQUE SENSOR”.
	● Poor performance of motor and clutch	Check motor and clutch referring to “ON-VEHICLE INSPECTION” of “MOTOR ASSEMBLY”.
	● Faulty steering column	Replace.
	● Poor performance of VSS	Check VSS referring to SECTION 6E.
Vehicle pulls to one side during straight driving	● Poor performance of torque sensor	Check torque sensor referring to “ON-VEHICLE INSPECTION” of “TORQUE SENSOR”.
Poor recovery from turns	● Poor performance of torque sensor	Check torque sensor referring to “ON-VEHICLE INSPECTION” or “TORQUE SENSOR”.
	● Faulty steering column	Replace.

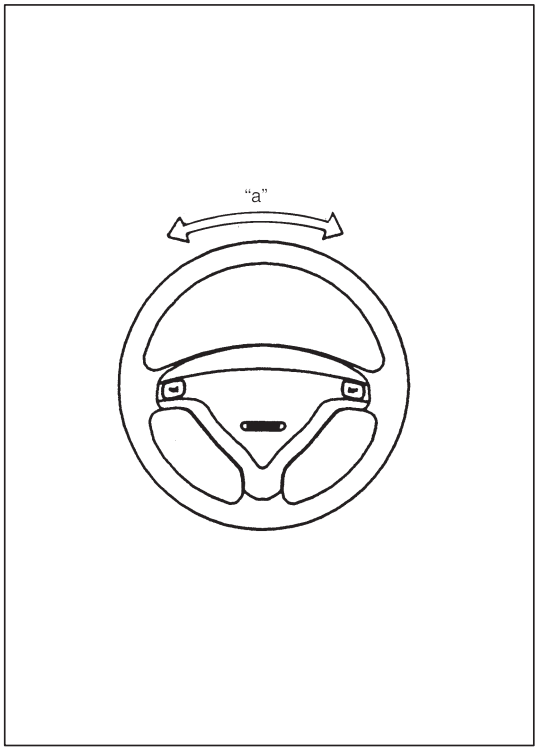

INSPECTION OF STEERING WHEEL PLAY

Check steering wheel for looseness or rattle by trying to move it in its shaft direction and lateral direction.
If found defective, repair or replace.

Check steering wheel for play, holding vehicle in straight forward condition on the ground and with engine stopped.

Steering wheel play "a": 0 – 30 mm (0 – 1.2 in.)

If steering wheel play is not within specification, inspect as follows and replace if found defective.
- Tie rod end ball stud for wear
- Lower ball joint for wear
- Steering shaft joint for wear
- Steering pinion or rack gear for wear or breakage
- Each part for looseness

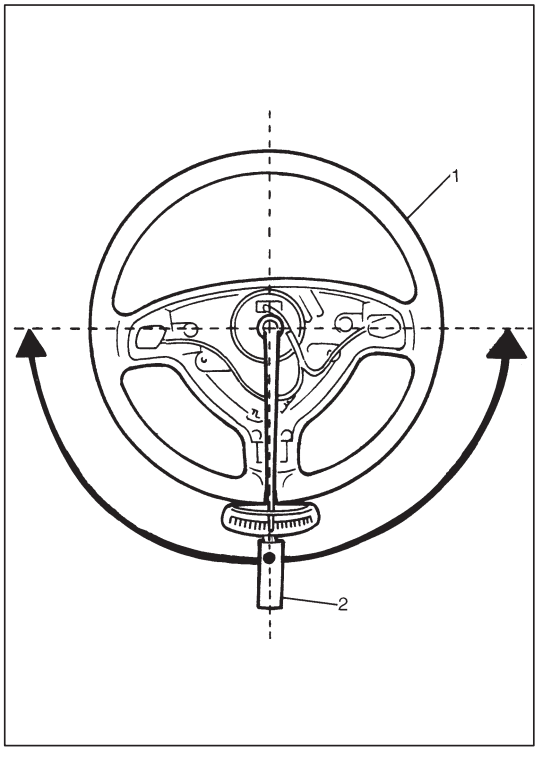

INSPECTION OF STEERING FORCE

1) Place vehicle on level road and set steering wheel (1) at straight-ahead position.
2) Check that tire inflation pressure is as specified. (Refer to tire placard.)
3) Remove driver air bag (inflator) module referring to SECTION 3C1.
4) Start engine.
5) With engine idling, measure steering force by torque wrench (2) as shown left figure.

   Steering force: Less than 5.9 N·m (0.59 kg-m, 4.5 lb-ft)

   NOTE:
   Be sure to consider the tire type, pressure and contact surface before inspection.

6) Install driver air bag (inflator) module referring to SECTION 3C.

ON-VEHICLE SERVICE

[LH]

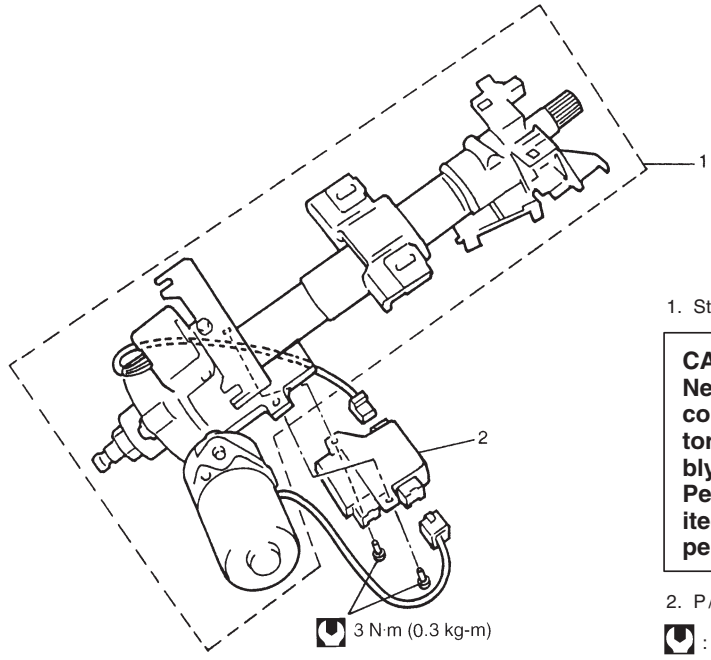

1. Steering column assembly

CAUTION:
Never disassemble steering column assembly, remove torque sensor or motor assembly (with clutch incorporated). Performing any of these prohibited services will affect original performance of EPS system.

2. P/S control module

: Tightening Torque

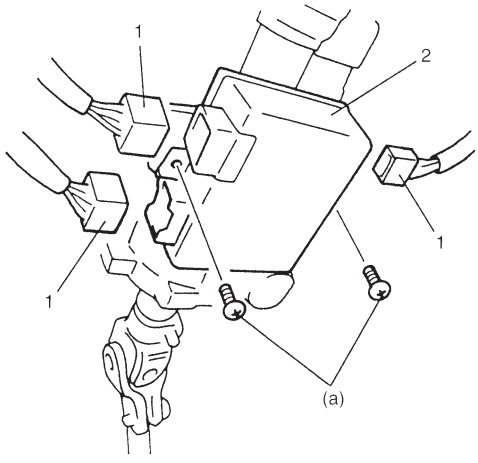

P/S CONTROL MODULE

REMOVAL

1) Disconnect negative cable at battery.
2) Remove steering column hole cover.
3) Disconnect couplers (1) from P/S control module (2).
4) Remove P/S control module from steering column assembly.

INSTALLATION

Reverse removal procedure for installation.

Tightening Torque
(a): 3 N·m (0.3 kg-m, 2.0 lb-ft)

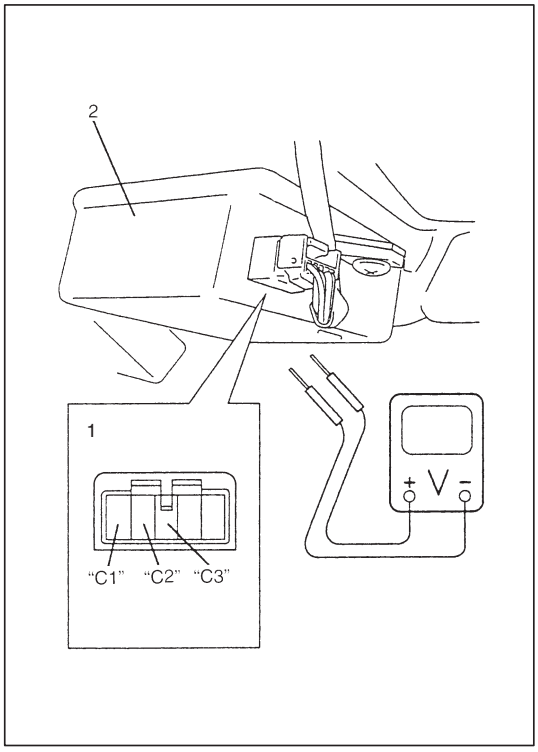

TORQUE SENSOR

ON-VEHICLE INSPECTION

1) Remove steering column lower cover.
2) Turn ignition switch to ON position.
3) Check voltage between terminals of torque sensor connector (1) with connecting it to P/S control module (2) and not running engine.

	Steering wheel turned fully right	Steering wheel held at position for run straight	Steering wheel turned fully left
Main sensor ("C1" – "C3")	About 3.9 V	About 2.5 V	About 1.1 V
Sub sensor ("C2" – "C3")	About 1.1 V	About 2.5 V	About 3.9 V

If check result is not satisfactory, replace steering column assembly.

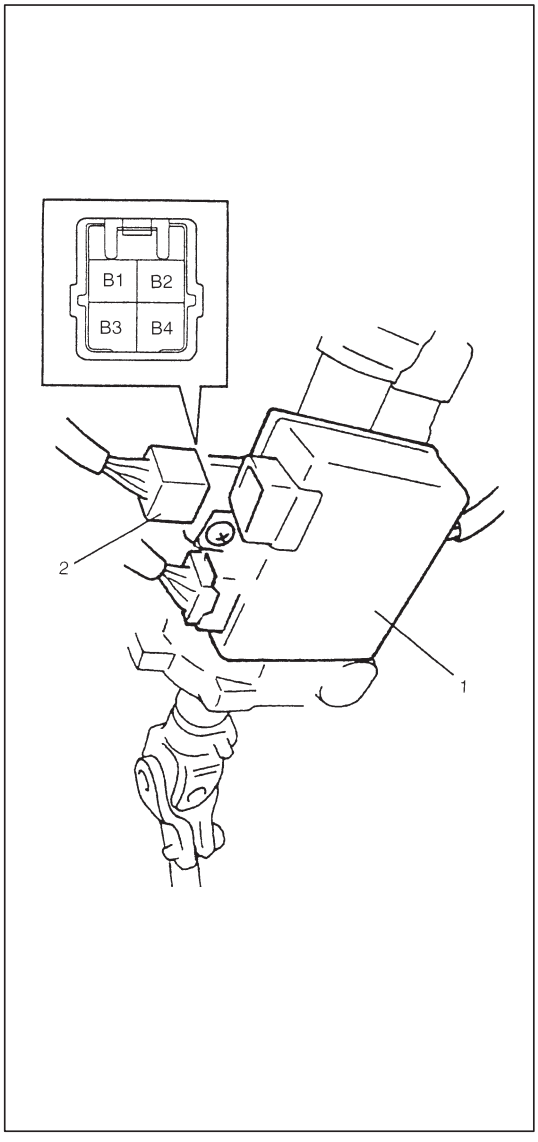

MOTOR ASSEMBLY (WITH CLUTCH INCORPORATED)

ON-VEHICLE INSPECTION

1) Remove steering column hole cover.
2) Disconnect motor and clutch coupler (1) from P/S control module (2) with ignition switch is OFF.
3) Check resistance between terminals of motor assembly coupler.

"B1" and "B2" (For motor)	About 1 Ω
"B3" and "B4" (For clutch)	About 12 Ω (at 20°C (68°F))

If check result is not satisfactory, replace steering column assembly.

4) Check continuity between terminal of motor assembly coupler and body ground.

"B1" and body ground	No continuity
"B3" and body ground	No continuity

If check result is not satisfactory, replace steering column assembly.

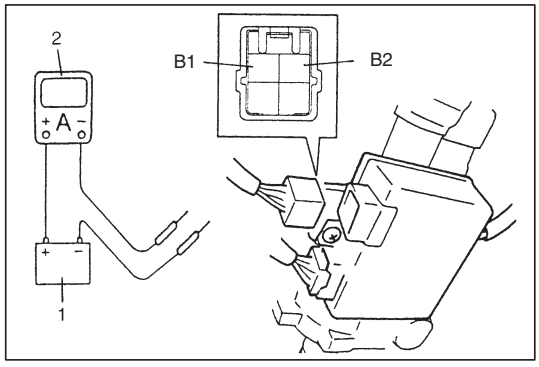

5) Connect battery (1) between “B1” and “B2”. Check that motor rotates smoothly, then messure current between “B1” and “B2” using ammeter (2) as shown in left figure.

Standard current (reference value) : About 0.65 A

If check result is not satisfactory, replace steering column assembly.

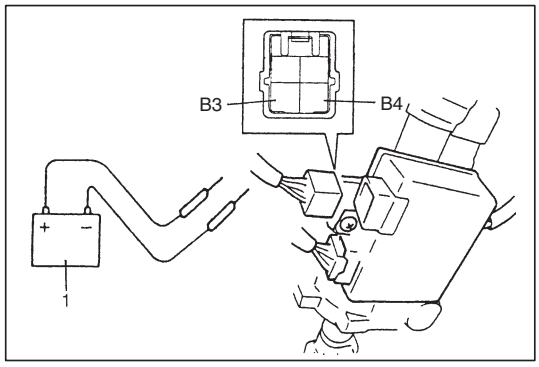

6) Connect battery (1) between “B3” and “B4”, then check that clutch operation sound is heard.
If check result is not satisfactory, replace steering column assembly.

STEERING COLUMN ASSEMBLY

Refer to “STEERING WHEEL AND COLUMN” section for removal and installation of steering column assembly but disconnect all couplers from P/S control module beforehand.

SPECIAL TOOLS

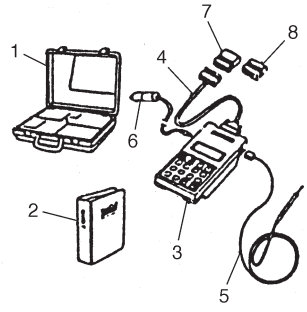 1. Storage case 2. Operator’s manual 3. Tech 1A 4. DLC cable 5. Test lead/probe 6. Power source cable 7. DLC cable adapter 8. Self-test adapter 09931-76011 SUZUKI scan tool (Tech 1A) kit	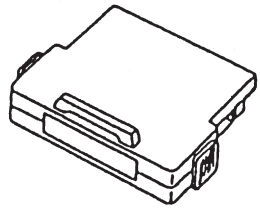 Mass storage cartridge	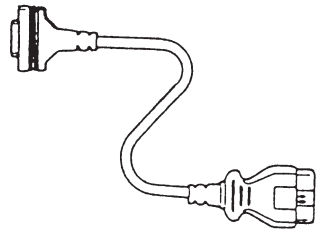 09931-76030 16/14 pin DLC cable

SECTION 3C

STEERING WHEEL AND COLUMN

WARNING:
The procedures in this section must be followed in the order listed to temporarily disable the air bag system and prevent false diagnostic codes from setting.
Failure to follow procedures could result in possible air bag system activation, personal injury or otherwise unneeded air bag system repairs.

CAUTION:
When fasteners are removed, always reinstall them at the same location from which they were removed. If a fastener needs to be replaced, use the correct part number fastener for that application. If the correct part number fastener is not available, a fastener of equal size and strength (or stronger) may be used. Fasteners that are not reused, and those requiring thread-locking compound, will be called out. The correct torque value must be used when installing fasteners that require it. If the above procedures are not followed, parts or system damage could result.

CONTENTS

GENERAL DESCRIPTION

STEERING COLUMN

This double tube type steering column has the following three important features in addition to the steering function:
- The column is energy absorbing, designed to compress in a front-end collision.
- The ignition switch and lock are mounted conveniently on this column.
- With the column mounted lock, the ignition and steering operations can be locked to inhibit theft of the vehicle.

To insure the energy absorbing action, it is important that only the specified screws, bolts, and nuts be used as designated and that they are tightened to the specified torque.

When the column assembly is removed from the vehicle, special care must be taken in handling it. A sharp blow on the end of the steering shaft, leaning on the assembly, or dropping the assembly could shear the plastic shear pins which maintain column length and position.

STEERING WHEEL AND DRIVER AIR BAG (INFLATOR) MODULE

The driver air bag (inflator) module is one of the supplemental restraint air bag system components and is mounted to the center of the steering wheel.
During certain frontal crashes, the air bag system supplements the restraint of the driver's and/or passenger's seat belts by deploying the air bag in each air bag (inflator) module.
The air bag (inflator) module should be handled with care to prevent accidental deployment. When servicing, be sure to observe all WARNINGS and CAUTIONS in this section. Refer to "Precautions" later in this section, and to SECTION 10B.

DIAGNOSIS

For diagnosis of the steering wheel and steering column, refer to SECTION 3. For diagnosis of the air bag system, refer to SECTION 10B.

INSPECTION AND REPAIR REQUIRED AFTER ACCIDENT

After an accident, whether the air bag has been deployed or not, be sure to perform inspections and repairs described under "Checking Steering Column for Accident Damage" in this section as well as "Repairs and Inspections Required after Accident" in SECTION 10B.

PRECAUTIONS

SERVICE PRECAUTION

- WARNING/CAUTION labels are attached on each part of air bag system components (SDM, air bag (inflator) module(s) and seat belt pretensioners (if equipped)). Be sure to follow the instructions.

WARNING:
- **If the air bag system and another vehicle system both need repair, Suzuki recommends that the air bag system be repaired first, to help avoid unintended air bag system activation.**
- **Do not modify the steering wheel, dashboard, or any other air bag system component. Modifications can adversely affect air bag system performance and lead to injury.**
- **Failure to follow procedures could result in possible air bag activation, personal injury or unneeded air bag system repairs.**

- Many of the service procedures require disconnection of the “AIR BAG” fuse and all air bag (inflator) module(s) (driver and passenger) from the initiator circuit to avoid an accidental deployment.
- Never use air bag component parts from another vehicle.
- If the vehicle will be exposed to temperatures over 93°C (200°F) (for example, during a paint baking process), remove the air bag system components.
- When servicing, if shocks may be applied to air bag system component parts, remove those parts beforehand.

WARNING:
When performing service on or around air bag system components or air bag system wiring, follow the procedures listed below to temporarily disable the air bag system. Failure to follow procedures could result in possible air bag deployment, personal injury or unneeded air bag system repairs.

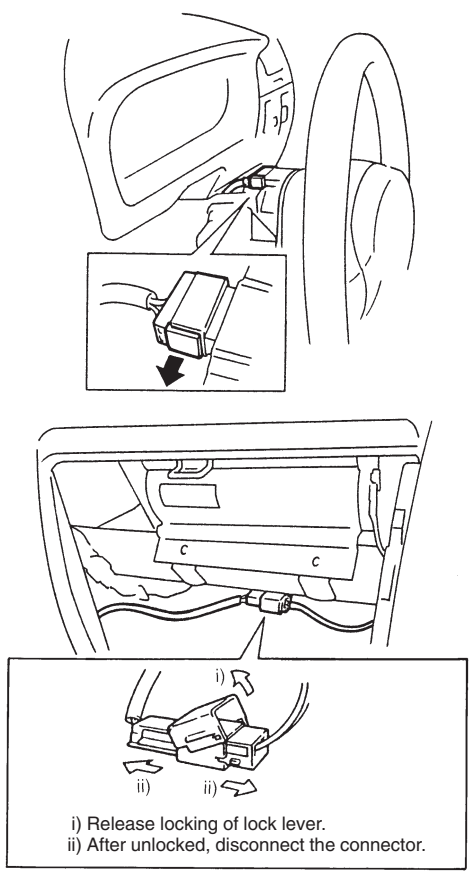

i) Release locking of lock lever.
ii) After unlocked, disconnect the connector.

DISABLING AIR BAG SYSTEM

1) Turn steering wheel so that vehicle’s wheels (front tires) are pointing straight ahead.
2) Turn ignition switch to “LOCK” position and remove key.
3) Remove “AIR BAG” fuse from circuit fuse box.
4) Remove steering column lower cover and upper cover.
5) Disconnect connector from contact coil assembly.
6) If equipped with passenger air bag (inflator) module, open glove box panel by unhooking and pushing it from inside of instrument panel and disconnect Yellow connector of passenger air bag (inflator) module.

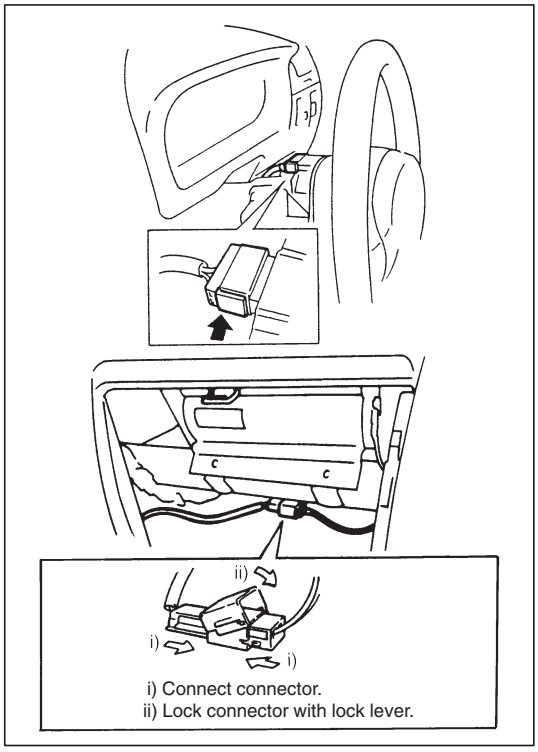

ENABLING AIR BAG SYSTEM

1) Turn ignition switch to “LOCK” and remove key.
2) Connect connector to contact coil assembly, and install steering column upper cover and lower cover.
3) Connect Yellow connector of passenger air bag (inflator) module if equipped, and be sure to lock connector with lock lever and close glove box panel.
4) Install “AIR BAG” fuse to the circuit fuse box.
5) Turn ignition switch to “ON” and verify that “AIR BAG” warning lamp flushes 6 times and then turns OFF.
   If it does not operate as described, perform “Air Bag Diagnostic System Check” in SECTION 10B.

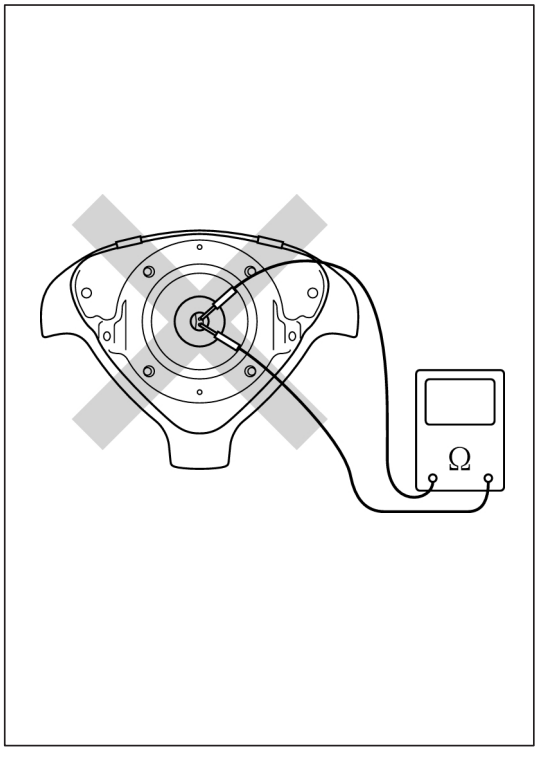

HANDLING PRECAUTION

LIVE (UNDEPLOYED) DRIVER AIR BAG (INFLATOR) MODULE

WARNING:
Never attempt to measure the resistance of the air bag (inflator) module. It is very dangerous as the electric current from the tester may deploy the air bag.

Special care is necessary when handling and storing a live (undeployed) air bag (inflator) module. The rapid gas generation produced during deployment of the air bag could cause the air bag (inflator) module, or an object in front of the air bag (inflator) module, to be thrown through the air in the unlikely event of an accidental deployment.

- Never attempt disassembly of the air bag (inflator) module.
- If any abnormality is found, be sure to replace it with new one as an assembly.
- When grease, cleaning agent, oil, water, etc., got on the air bag (inflator) module, wipe it off immediately with a dry cloth.

ALWAYS CARRY AIR BAG (INFLATOR) MODULE WITH TRIM COVER (AIR BAG OPENING) AWAY FROM BODY.

ALWAYS PLACE AIR BAG (INFLATOR) MODULE ON WORKBENCH WITH TRIM COVER (AIR BAG OPENING) UP, AWAY FROM LOOSE OBJECTS.

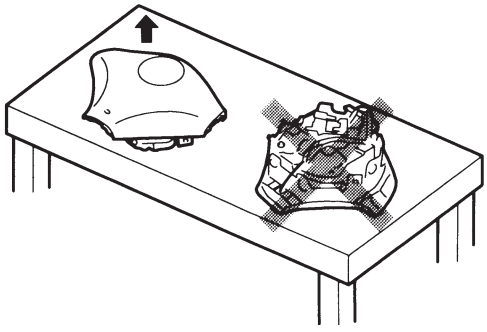

- If air bag (inflator) module was dropped from a height of 90 cm (3 ft) or more, it should be replaced.
- When an abnormality is noted as existing in the live (undeployed) air bag (inflator) module, be sure to deploy it before discarding it. (Refer to “Air Bag (Inflator) Module Disposal” in SECTION 10B.)

WARNING:
- **For handling and storing an air bag (inflator) module, select a place where the ambient temperature below 65°C (150°F), without high humidity and away from electric noise.**
- **When carrying a live air bag (inflator) module, make sure the bag opening is pointed away from you. In case of an accidental deployment, the bag will then deploy with minimal chance of injury. Never carry the air bag (inflator) module by the wires or connector on the underside of the module.**
- **When placing a live air bag (inflator) module on a bench or other surface, always face the bag up, away from the surface.**
  It is also prohibited to place anything on top of the trim cover and stack air bag (inflator) module.
  This is necessary so that a free space is provided to allow the air bag to expand in the unlikely event of accidental deployment.

DEPLOYED DRIVER AIR BAG (INFLATOR) MODULE

WARNING:
- **Immediately after deployment, the air bag (inflator) module is very hot. Wait for at least 10 minutes to cool it off before starting servicing (handling) it.**
- **Do not apply water, etc. to deployed air bag (inflator) module.**
- **After an air bag (inflator) module has been deployed, the surface of the air bag may contain a powdery residue. This powder consists primarily of cornstarch (used to lubricate the bag as it inflates) and by-products of the chemical reaction. As with many service procedures, gloves and safety glasses should be worn.**
- **Wash your hands with mild soap and water after completing the work.**

Refer to the procedure described under “Deployed Air Bag (Inflator) Module Disposal” in SECTION 10B for details.

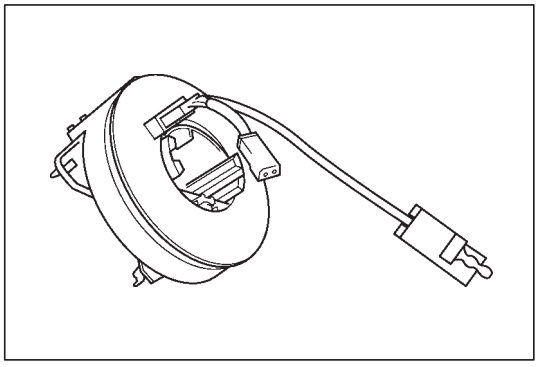

CONTACT COIL CABLE ASSEMBLY

Do not turn contact coil more than allowable number of turns (about two and a half turns from the center position clockwise or counter-clockwise respectively), or coil will break.

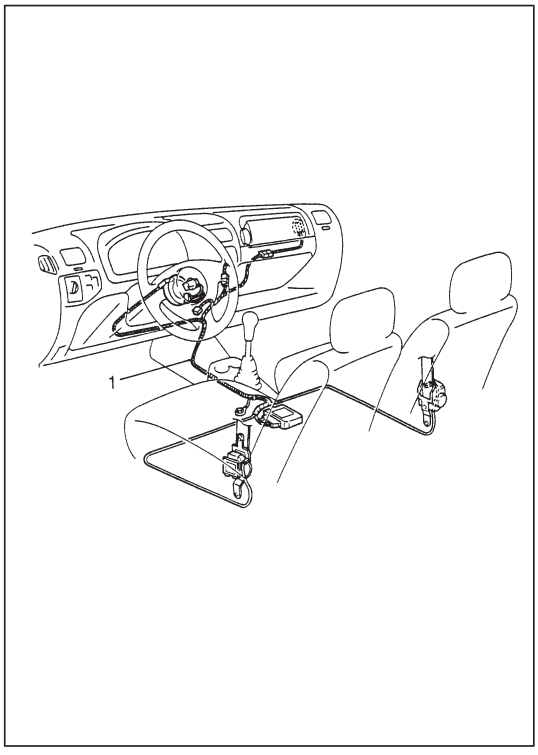

AIR BAG WIRE HARNESS AND CONNECTOR

CAUTION:
When an open in air bag wire harness, damaged wire harness, connector or terminal is found, replace wire harness, connectors and terminals as an assembly.

- Air bag wire harness (1) can be identified easily as it is covered with a Yellow protection tube. Be very careful when handling it.
- When installing it, be careful so that the air bag wire harness is not caught or does not interfere with other parts.
- Make sure all air bag system grounding points are clean and grounds are securely fastened for optimum metal-to-metal contact. Poor grounding can cause intermittent problems that are difficult to diagnose.

DISPOSAL PRECAUTION

Do not dispose of live (undeployed) air bag (inflator) module. When disposal is necessary, be sure to deploy it first according to the procedure described in SECTION 10B and then dispose it.

WARNING:
Failure to follow proper air bag (inflator) module disposal procedures can result in air bag deployment which could cause personal injury. Undeployed air bag (inflator) module must not be disposed of through normal refuse channels. The undeployed air bag (inflator) module contains substances that can cause severe illness or personal injury if the sealed container is damaged during disposal.

ON-VEHICLE SERVICE

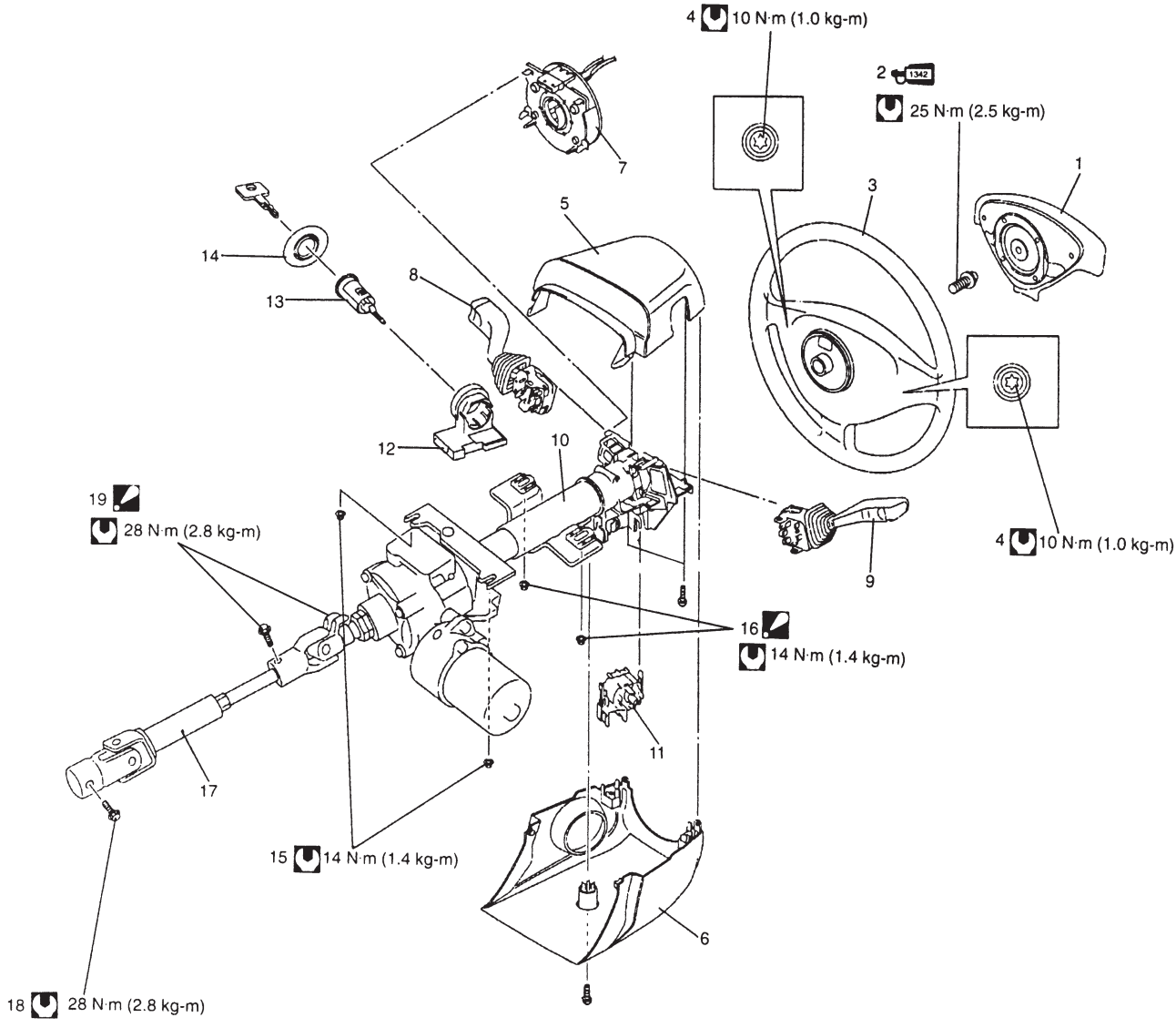

1. Driver air bag (inflator) module
2. Steering shaft bolt: (1342)
   Apply thread lock 99000-32050 to all around thread part of steering shaft bolt.
3. Steering wheel
4. Driver air bag (inflator) module mounting bolt
5. Steering column upper cover
6. Steering column lower cover
7. Contact coil cable assembly
8. Wiper switch assembly
9. Turn & dimmer switch assembly
10. Steering column assembly
11. Ignition switch assembly
12. Immobilizer control module
13. Ignition switch cylinder assembly
14. Ignition switch protector
15. Steering column lower mounting nut
16. Steering column upper mounting nut:
    After tightening lower nut, tighten upper nut.
17. Lower shaft
18. Lower joint bolt
19. Upper joint bolt:
    After tightening lower joint bolt, tighten upper joint bolt.

: Tightening Torque

DRIVER AIR BAG (INFLATOR) MODULE

WARNING:
When handling an air bag (inflator) module, be sure to read "Precautions" given earlier in this section and observe each instruction. Failure to follow them could cause a damage to the air bag (inflator) module or result in personal injury.

REMOVAL

1) Disconnect negative battery cable at battery terminal.
2) Disable air bag system. Refer to "Disabling Air Bag System" under "Precautions" earlier in this section.

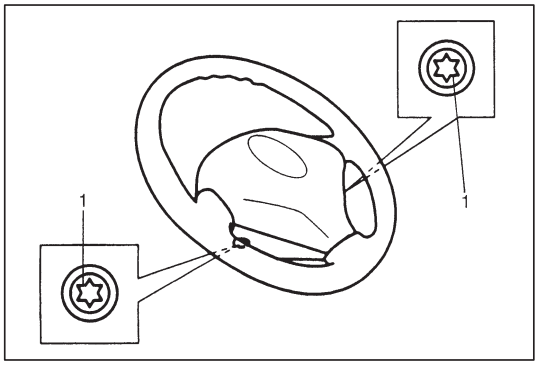

3) Loosen 2 bolts (1) mounting driver air bag (inflator) module till it turns freely.

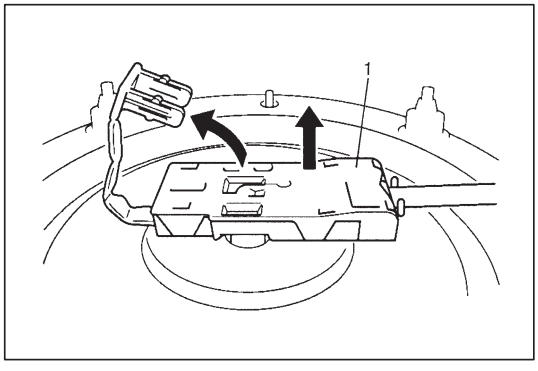

4) Remove air bag (inflator) module from steering wheel.
5) Disconnect yellow connector (1) of driver air bag (inflator) module as shown in figure.

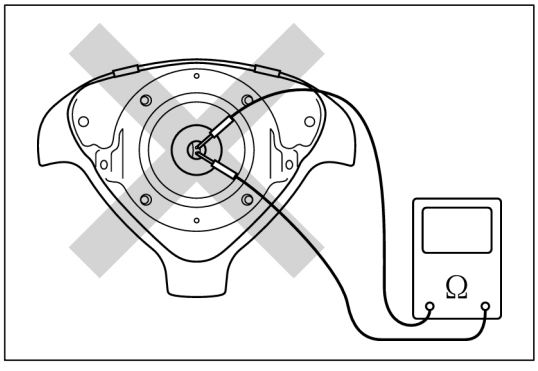

INSPECTION

WARNING:
Never disassemble air bag (inflator) module or measure its resistance. Otherwise, personal injury may result.

CAUTION:
If air bag (inflator) module was dropped from a height of 90 cm (3 ft) or more, it should be replaced.

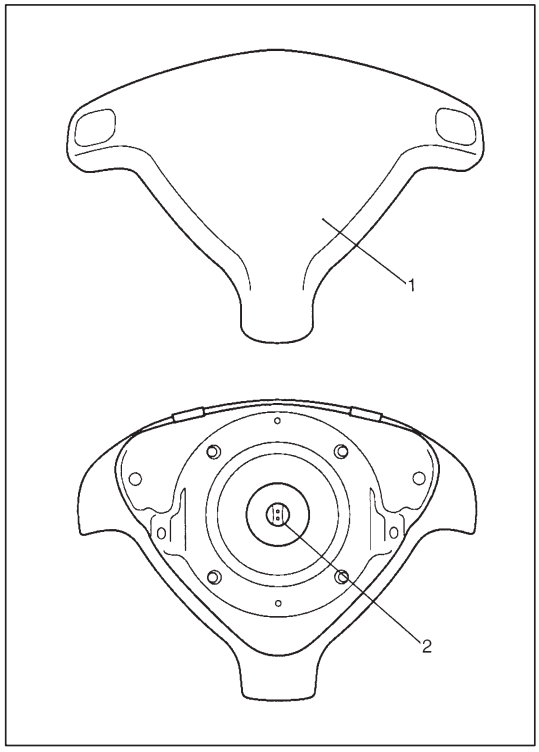

Check air bag (inflator) module visually and if any of the following is found, replace it with a new one.

- Air bag being deployed
- Trim cover (pad surface) (1) being cracked
- Terminal (2) being damaged
- Air bag (inflator) module being damaged or having been exposed to strong impact (dropped)

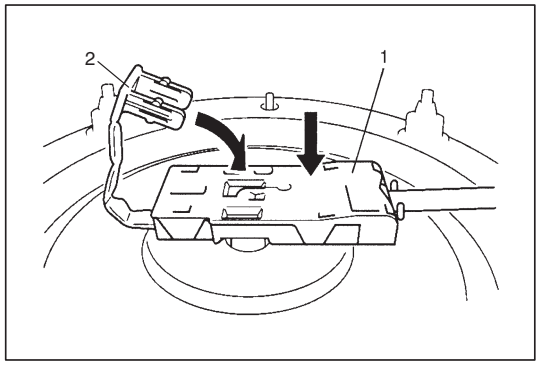

INSTALLATION

1) Connect yellow connector (1) of driver air bag (inflator) module and then lock (2) securely as shown in figure.

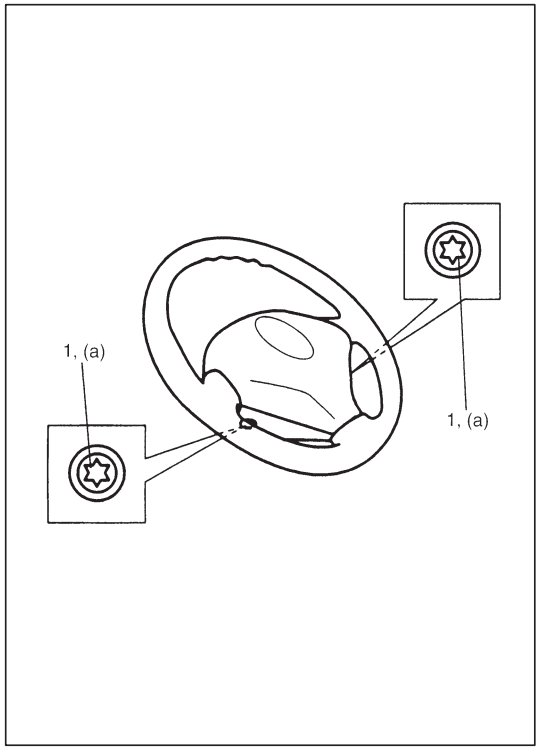

2) Install driver air bag (inflator) module to steering wheel, taking care so that no part of wire harness is caught between them.
3) Tighten driver air bag (inflator) module mounting bolts (1) to specified torque.

   Tightening Torque
   (a): 10 N·m (1.0 kg-m, 7.5 lb-ft)

4) Make sure that clearance between module and steering wheel is uniform all the way.
5) Connect negative battery cable.
6) Enable air bag system. Refer to “Enabling Air Bag System” under “Precautions” earlier in this section.

STEERING WHEEL

CAUTION:
Do not turn the contact coil more than allowable number of turns (about two and a half turns from the center position clockwise or counterclockwise respectively) with steering wheel removed, or coil will break.

REMOVAL

1) Disconnect negative battery cable at battery terminal.
2) Disable air bag system. Refer to “Disabling Air Bag System” under “Precautions” earlier in this section.
3) Remove driver air bag (inflator) module from steering wheel referring to “Driver Air Bag (Inflator) Module” earlier in this section.
4) Disconnect horn connector.

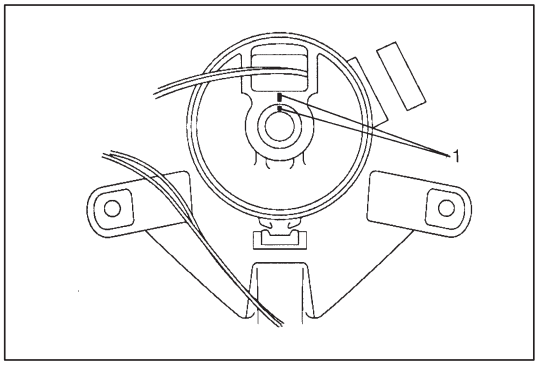

5) Remove steering shaft bolt.
6) Make alignment marks (1) on steering wheel and shaft for a guide during reinstallation.
7) Remove steering wheel.

CAUTION:
Do not hammer the end of the shaft. Hammering it will loosen the plastic shear pins which maintain the column length and impair the collapsible design of the column.

CENTERING CONTACT COIL CABLE ASSEMBLY

1) Check that vehicle’s wheels (front tires) are set at straight-ahead position.
2) Check that ignition switch is at “LOCK” position.

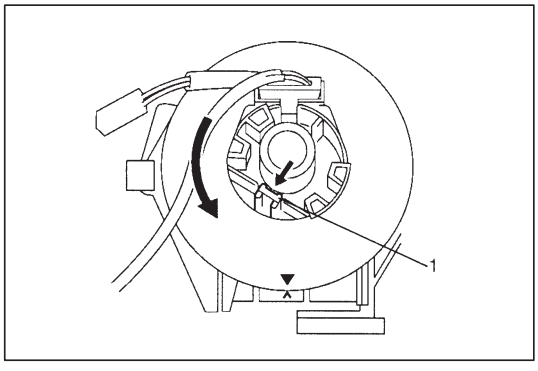

3) With pushing lock lever (1) and releasing contact coil lock, turn contact coil counterclockwise slowly with a light force till contact coil will not turn any further.

NOTE:
Contact coil can turn about 5 turns at maximum, that is, if it is at the center position, can turn about two and a half turns both clockwise and counterclockwise.

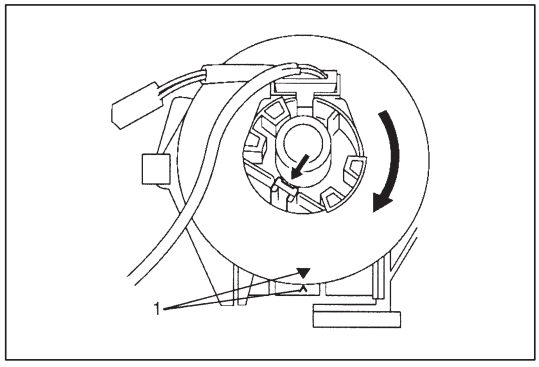

4) From the position where contact coil became unable to turn any further (it stopped), turn it back clockwise about two and a half rotations and align center mark with alignment mark (1).

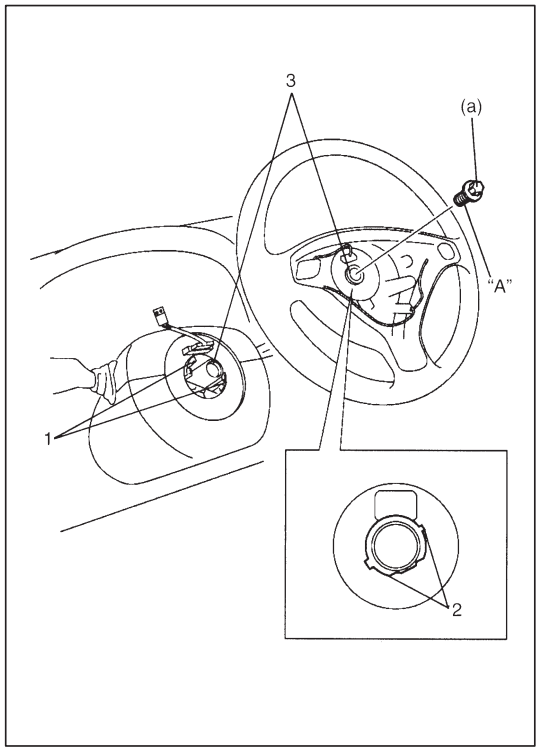

INSTALLATION

1) Check that vehicle's front tires are at straight-ahead position and contact coil is centered. If contact coil is turned after removing steering wheel, center contact coil referring to "Centering Contact Coil Cable Assembly" earlier in this section.

> **CAUTION:**
> **These two conditions are prerequisite for installation of steering wheel. If steering wheel has been installed without these conditions, contact coil will break when steering wheel is turned.**

2) Install steering wheel to steering shaft with 2 grooves (1) on contact coil fitted in two lugs (2) in the back of steering wheel and also aligning marks (3) on steering wheel and steering shaft.
3) Apply thread lock to all around thread part of steering shaft bolt and tighten to specified torque.

   "A": Thread lock 1342 99000-32050
   Tightening Torque
   (a): 25 N·m (2.5 kg-m, 18.5 lb-ft)

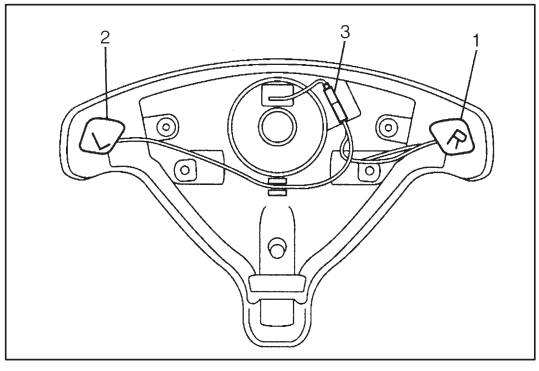

4) Install horn buttons, right (1) and left (2), and fix connector (3) securely.
5) Install driver air bag (inflator) module to steering wheel. Refer to "Driver Air Bag (Inflator) Module" earlier in this section.
6) Connect negative battery cable.
7) Enable air bag system. Refer to "Enabling Air Bag System" under "Precautions" earlier in this section.

CONTACT COIL CABLE ASSEMBLY

CAUTION:
Do not turn contact coil more than allowable number of turns (about two and a half turns from the center position clockwise or counterclockwise respectively), or coil will break.

REMOVAL

1) Disconnect negative battery cable at battery terminal.
2) Disable air bag system. Refer to “Disabling Air Bag System” under “Precautions” earlier in this section.
3) Remove steering wheel from steering column. Refer to “Steering Wheel” earlier in this section.

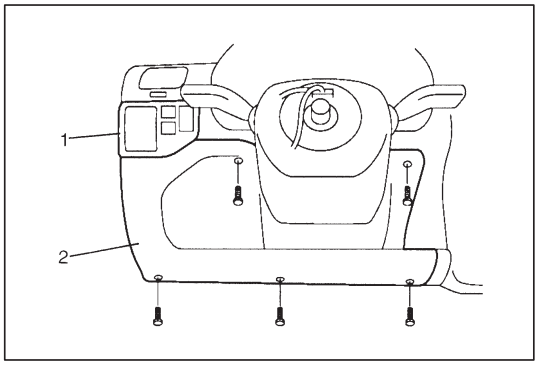

4) Remove instrument panel switch garnish (1) and steering column hole cover (2).

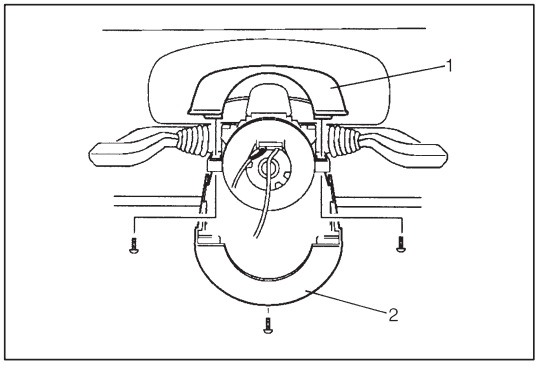

5) Remove steering column lower cover (2) and upper cover (1).

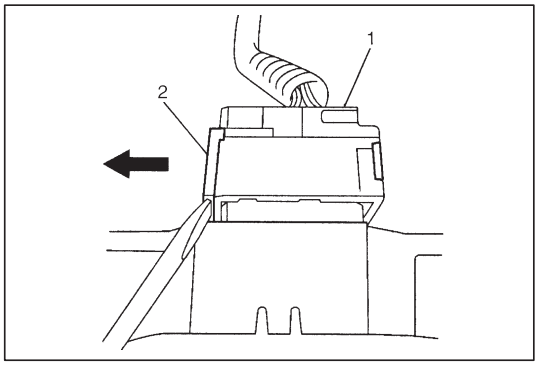

6) Disconnect connector (1) for contact coil cable assembly by pulling connector lock (2) out.

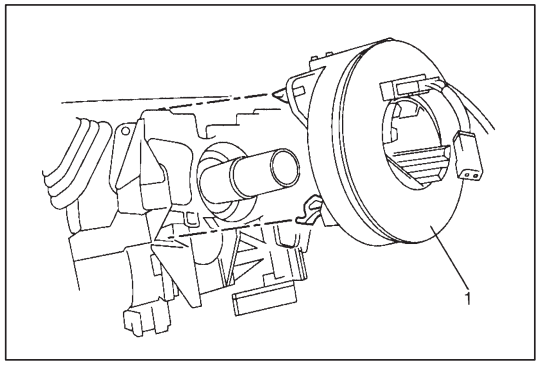

7) Remove contact coil cable assembly (1) from steering column.

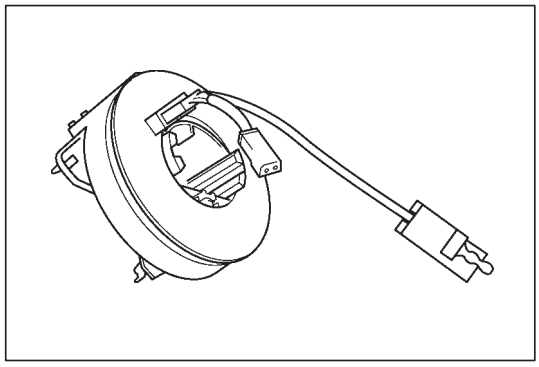

INSPECTION

Check contact coil cable assembly wire harness for any signs of scorching, melting or other damage. If it is damaged, replace.

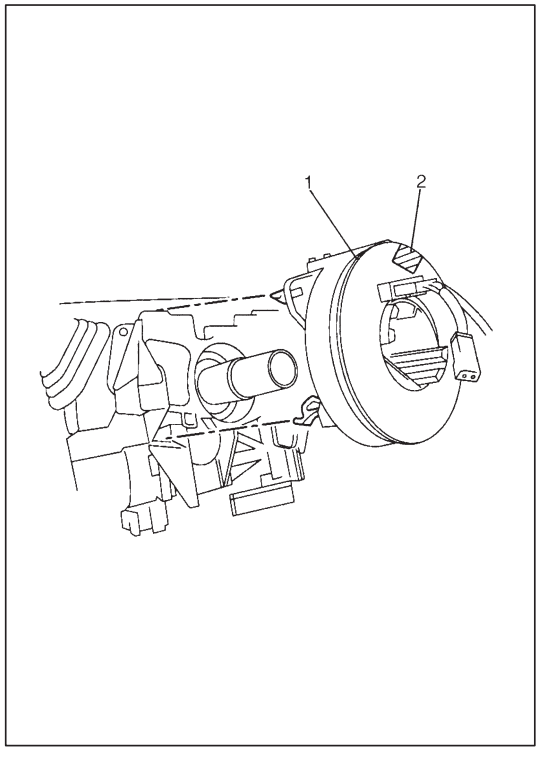

INSTALLATION

1) Check to make sure that vehicle's front tires are set at straight-ahead position and then ignition switch is at "LOCK" position.
2) Install contact coil cable assembly (1) to steering column securely.

   NOTE:
   New contact coil cable assembly is supplied with contact coil set and held at its center position with a seal (2). Peel this seal after installing contact coil cable assembly to steering column.

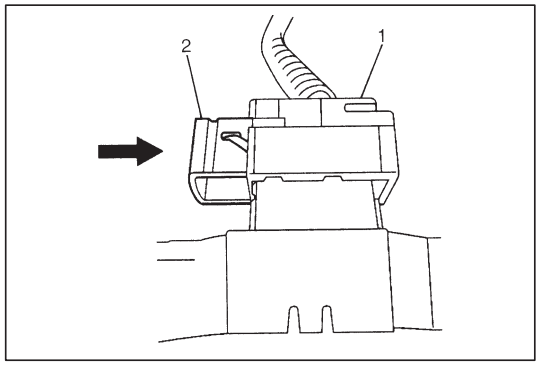

3) Connect connector (1) for contact coil cable assembly by pushing connector lock (2) into connector.

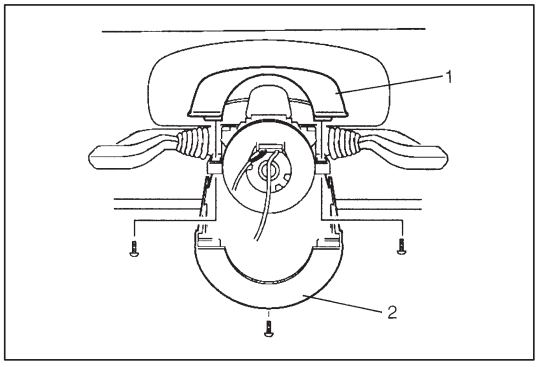

4) Install steering column upper cover (1) and lower cover (2).

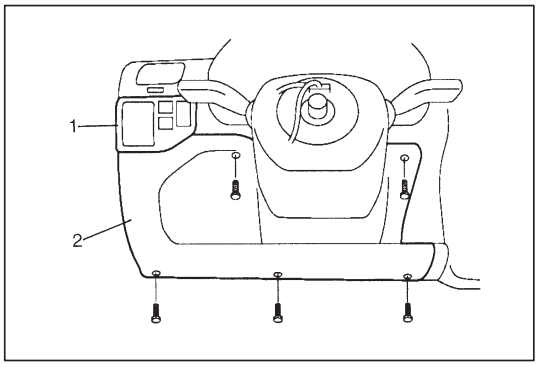

5) Install steering column hole cover (2) and instrument panel switch garnish (1).

6) Install steering wheel to steering column. Refer to “Steering Wheel” earlier in this section.
7) Connect battery negative cable.
8) Enable air bag system. Refer to “Enabling Air Bag System” under “Precautions” earlier in this section.

STEERING COLUMN

CAUTION:
Once the steering column is removed from the vehicle, the column is extremely susceptible to damage.
- **Dropping the column assembly on its end could collapse the steering shaft or loosen the plastic shear pins which maintain column length.**
- **Leaning on the column assembly could cause it to bend or deform.**

Any of the above damage could impair the column’s collapsible design.
Steering column mounting nuts should not be loosened with steering shaft joint upper side bolt tightened as this could cause damage to shaft joint bearing.

NOTE:
When servicing steering column or any column-mounted component, remove steering wheel. But when removing steering column simply to gain access to instrument panel components, leave steering wheel installed on steering column.

REMOVAL

1) Disconnect negative battery cable at battery terminal.
2) Disable air bag system. Refer to “Disabling Air Bag System” under “Precautions” earlier in this section.
3) Remove steering wheel and contact coil cable assembly. Refer to “Steering Wheel” and “Contact Coil Cable Assembly” earlier in this section.

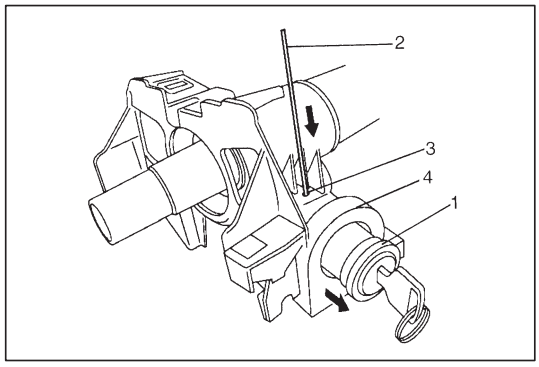

4) Detach turn & dimmer switch assembly and wiper switch assembly from steering column.
5) Remove ignition switch cylinder assembly (1) as follows.
   a) Turn ignition switch key to “ACC” position.
   b) Insert 2 mm (0.078 in.) rod (2) through hole (3) and push ignition switch cylinder lock.

5-1) Remove immobilizer control module (4) from steering column.

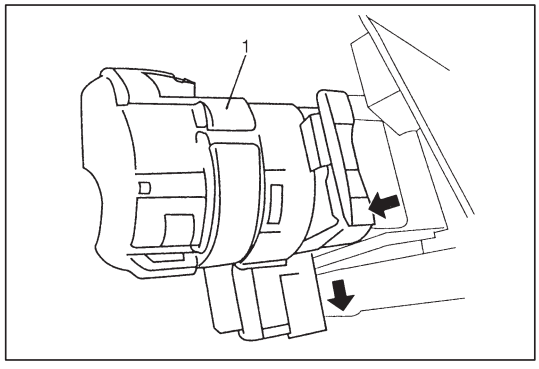

6) Detach ignition switch assembly (1) from steering column.
7) Disconnect connectors from electrical power steering system parts if equipped.

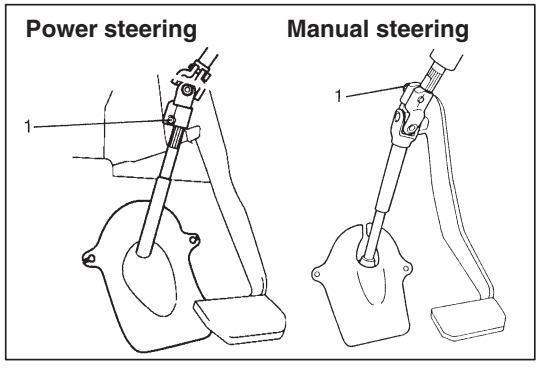

8) Remove steering shaft upper joint bolt (1).

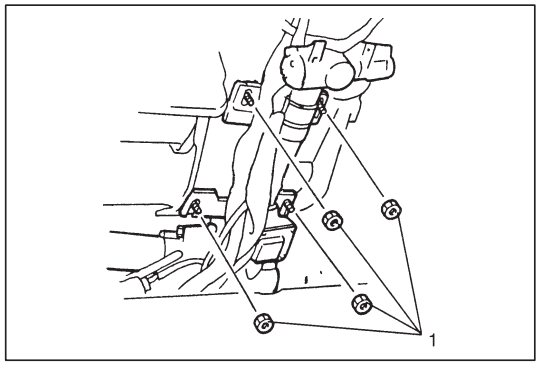

9) Remove steering column mounting nuts (1).
10) Remove steering column from vehicle.

WARNING:
Never rest a steering column assembly on the steering wheel with the air bag (inflator) module face down and column vertical. Otherwise, personal injury may result.

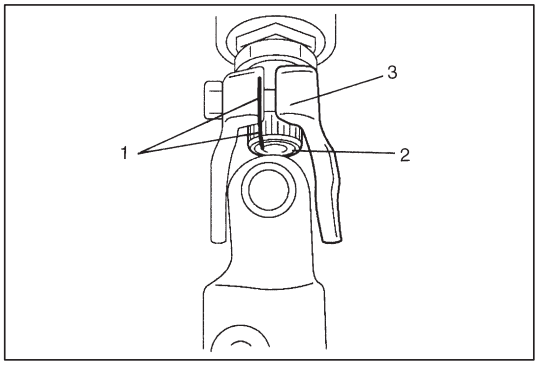

11) When disconnecting upper joint (3) from power steering column shaft (2), make alignment marks (1) on column shaft and upper joint, and be sure to align marks (1) when reconnecting.

INSPECTION

Check steering column for damage and operation referring to CHECKING STEERING COLUMN FOR ACCIDENT DAMAGE later in this section.

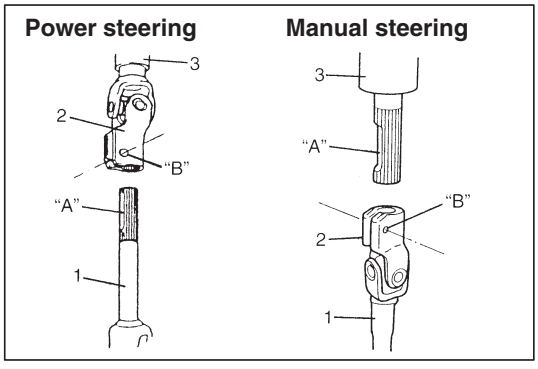

INSTALLATION

1) Connect steering column to lower shaft.
   For power steering, align flat part "A" of lower shaft (1) with bolt hole "B" of upper joint (2) as shown. Then insert upper joint (2) onto lower shaft (1).
   For manual steering, align flat part "A" of steering column (3) with bolt hole "B" of upper joint (2) and insert steering column shaft into upper joint (2) of lower shaft (1).

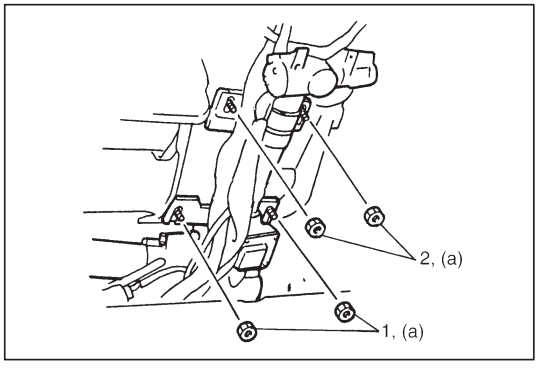

2) Install steering column assembly to lower and upper brackets. Torque steering column lower nuts (1) first and then upper nuts (2) to specifications as given below.

   Tightening Torque
   (a): 14 N·m (1.4 kg-m, 10.5 lb-ft)

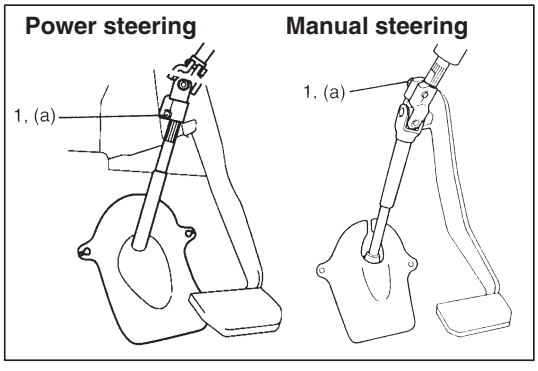

3) Install bolt (1) to steering shaft upper joint and tighten it to specified torque.

> **CAUTION:**
> **After tightening column nuts, tighten steering shaft upper joint bolt. Otherwise shaft joint bearing is damaged.**

   Tightening Torque
   (a): 28 N·m (2.8 kg-m, 20.5 lb-ft)

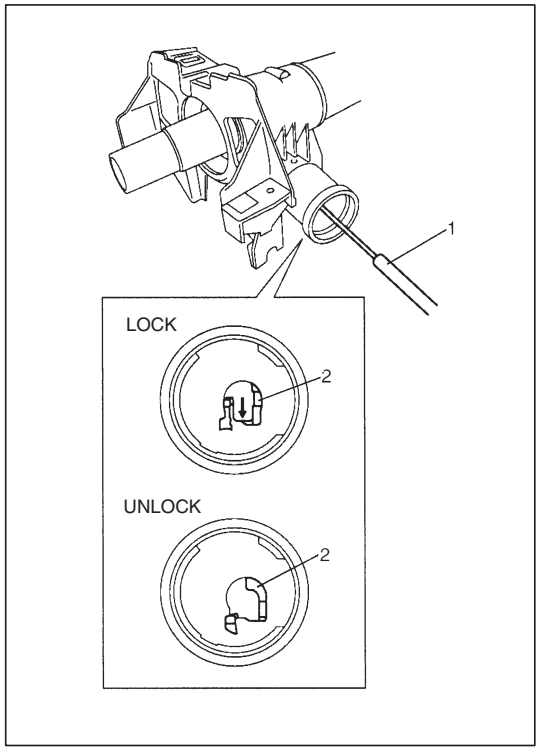

4) Install ignition switch assembly and immobilizer control module to steering column.
5) Install ignition switch cylinder assembly as follows.
   a) Push steering lock (2) down till it clicks, using screw driver (1), so that it is at unlock position.
   b) Turn ignition key of ignition switch cylinder assembly to “ACC” position.
   c) In this state, push ignition switch cylinder assembly into steering column till it clicks.
6) Install turn & dimmer switch, wiper switch and ignition switch protector to steering column.
7) Connect all connectors that have been removed in “Removal”.
8) Install contact coil cable assembly and steering wheel.
   Refer to CONTACT COIL CABLE ASSEMBLY and STEERING WHEEL in this section.
9) Connect negative battery cable.
10) Enable air bag system. Refer to “Enabling Air Bag System” under “Precautions” earlier in this section.

STEERING LOWER SHAFT

REMOVAL

1) Turn steering wheel so that vehicle’s front tires are at straight-ahead position.
2) Turn ignition switch to “LOCK” position and remove key.

CAUTION:
Never turn steering wheel while steering lower shaft is removed.
Should it have been turned and contact coil have got out of its centered position, it needs to be centered again. Also, turning steering wheel more than about two and a half turns will break contact coil.

3) Remove steering joint cover.

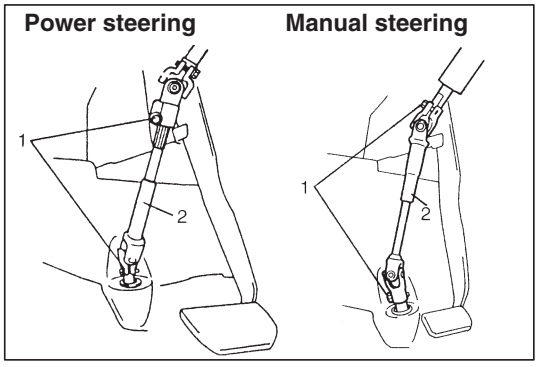

4) Remove steering shaft joint bolts (1) and then remove steering lower shaft (2).

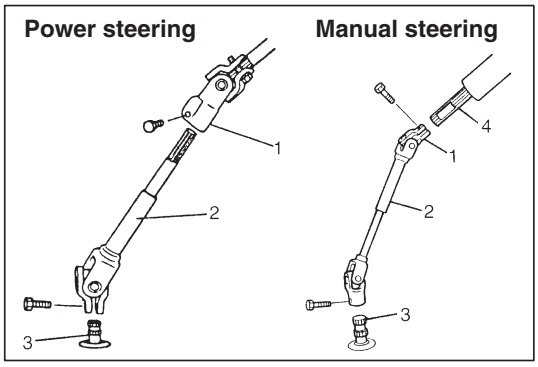

INSTALLATION

1) Align flat part of steering lower shaft (2) or steering column (4) with bolt hole of upper joint (1) as shown. Then insert lower shaft or steering column into upper joint.
2) Be sure that front wheels and steering wheel are in straight-forward state and insert lower joint into steering pinion shaft (3).

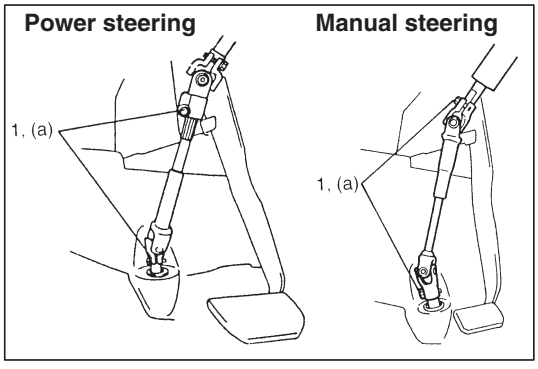

3) Tighten steering shaft joint bolts (1) to specification (lower side first and then upper side).

Tightening Torque
(a): 28 N·m (2.8 kg-m, 20.5 lb-ft)

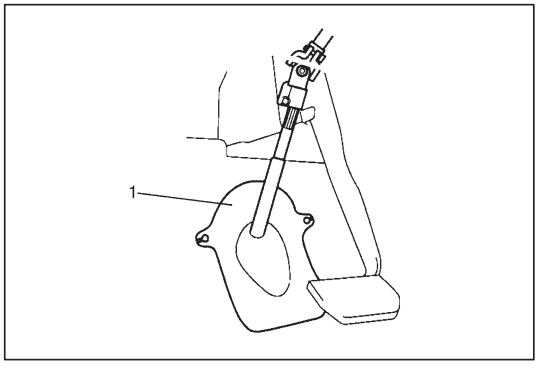

4) Install steering shaft joint cover (1).

CHECKING STEERING COLUMN FOR ACCIDENT DAMAGE

NOTE:
Vehicles involved in accidents resulting in body damage, where steering column has been impacted or air bag deployed, may have a damaged or misaligned steering column.

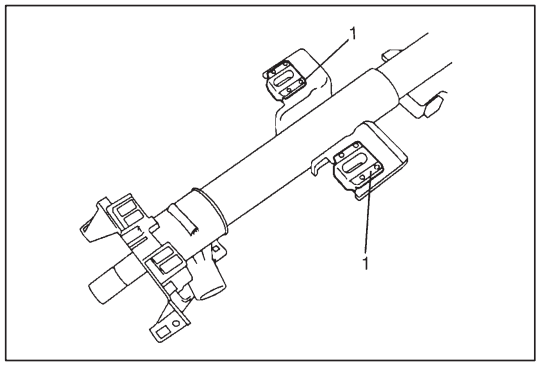

CHECKING PROCEDURE

1) Check that two capsules (1) are attached to steering column bracket securely. If found loose, replace steering column assembly.

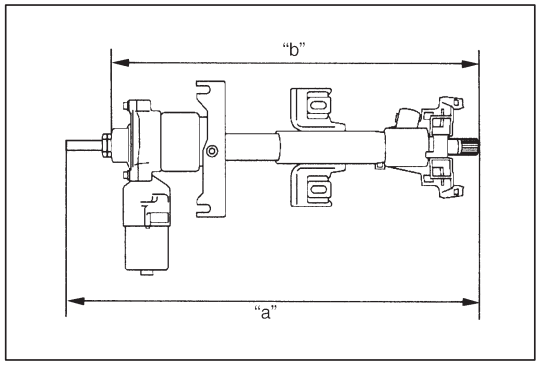

2) Take measurement "a" and "b" as shown. If it is shorter than specified length, replace column assembly with new one.

   Power steering column length
   "a": 518 ± 1.5 mm (20.4 ± 0.06 in.)
   "b": 479.2 ± 1.5 mm (18.9 ± 0.06 in.)
   Manual steering column length
   "a": 512 ± 1.5 mm (20.2 ± 0.06 in.)
   "b": 440 ± 1.5 mm (17.3 ± 0.06 in.)

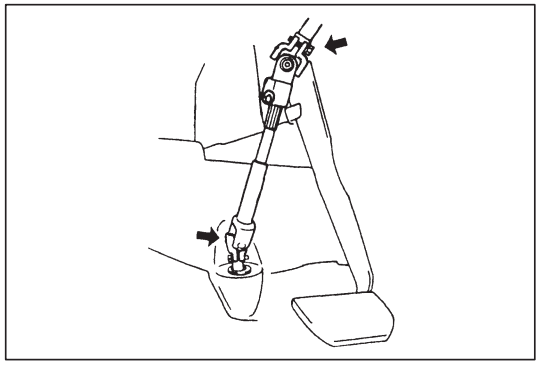

3) Check steering shaft joints and shaft for any damages such as crack, breakage, malfunction or excessive play. If anything is found faulty, replace as lower joint assembly or column assembly.

4) Check steering shaft for smooth rotation.
   If found defective, replace as column assembly.
5) Check steering shaft and column for bend, cracks or deformation.
   If found defective, replace.

REQUIRED SERVICE MATERIALS

MATERIALS	RECOMMENDED SUZUKI PRODUCT	USE
Thread lock cement	THREAD LOCK 1342 (99000-32050)	Steering shaft bolt

SECTION 3D

FRONT SUSPENSION

NOTE:

- **All front suspension fasteners are an important attaching part in that it could affect the performance of vital parts and systems, and/or could result in major repair expense. They must be replaced with one of the same part number or with an equivalent part if replacement becomes necessary. Do not use a replacement part of lesser quality or substitute design. Torque values must be used as specified during reassembly to assure proper retention of this part.**
- **Never attempt to heat, quench or straighten any front suspension part. Replace it with a new part or damage to the part may result.**

CONTENTS

GENERAL DESCRIPTION

The front suspension is the strut type independent suspension. The upper end of a strut is anchored to the vehicle body by a strut support. The strut and strut support are isolated by a rubber mount. A strut bearing is also installed a little lower to the rubber mount.

The lower end of the strut is connected to the upper end of a steering knuckle and lower end of knuckle is attached to the stud of a ball joint which is incorporated in a unit with a suspension control arm. And connected to this steering knuckle is the tie-rod end.

Thus, movement of the steering wheel is transmitted to the tie-rod end and then to the knuckle, eventually causing the wheel-and-tire to move. In this operation, with the movement of the knuckle, the strut also rotates by means of the strut bearing and lower ball joint.

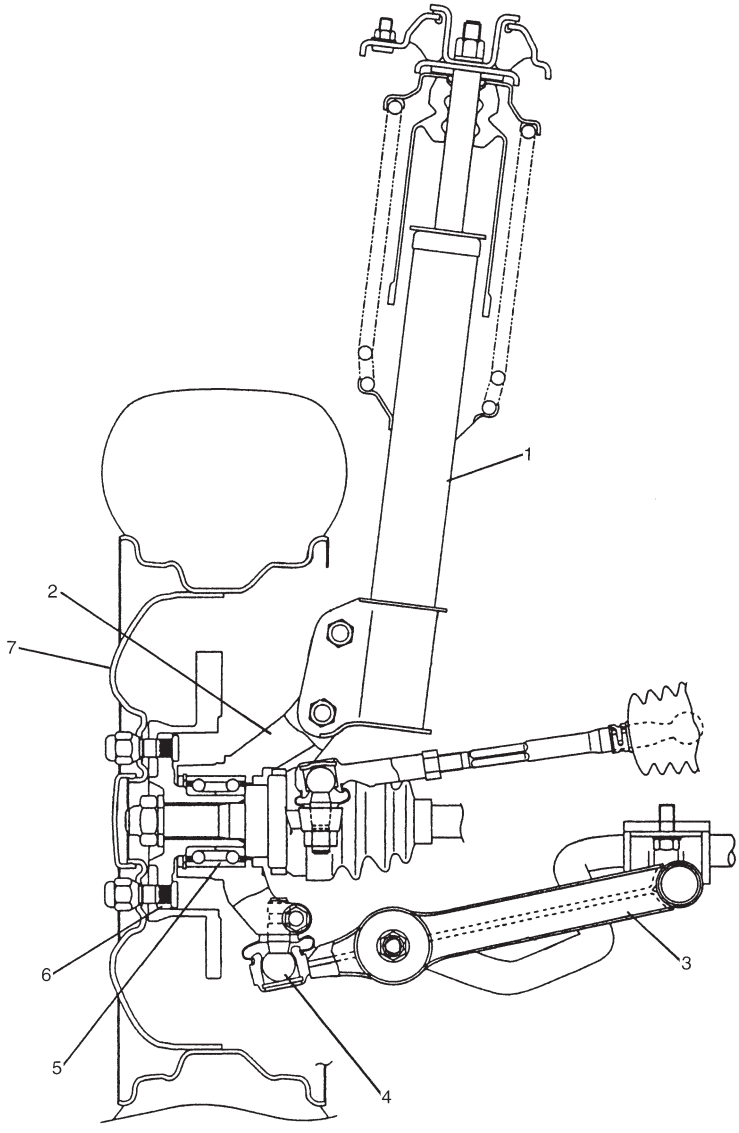

1. Strut assembly
2. Steering knuckle
3. Suspension control arm
4. Ball stud
5. Wheel bearing
6. Front wheel hub
7. Wheel

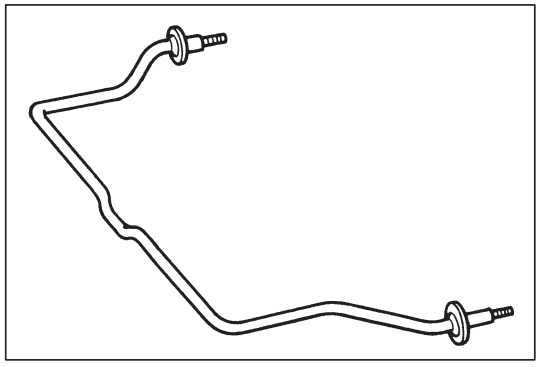

DIAGNOSIS

DIAGNOSIS TABLE

Refer to Section 3.

STABILIZER BAR AND/OR BUSHING CHECK

Bar

Inspect for damage or deformation. If defective, replace.

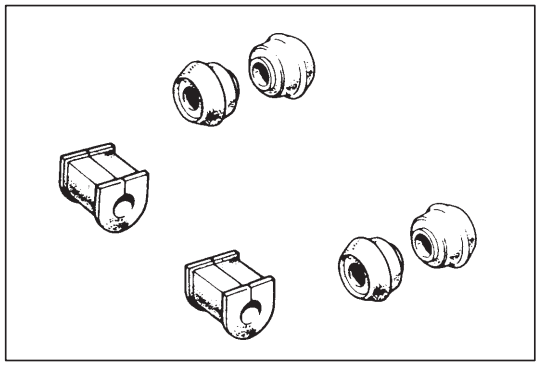

Bushing

Inspect for damage, wear or deterioration. If defective, replace.

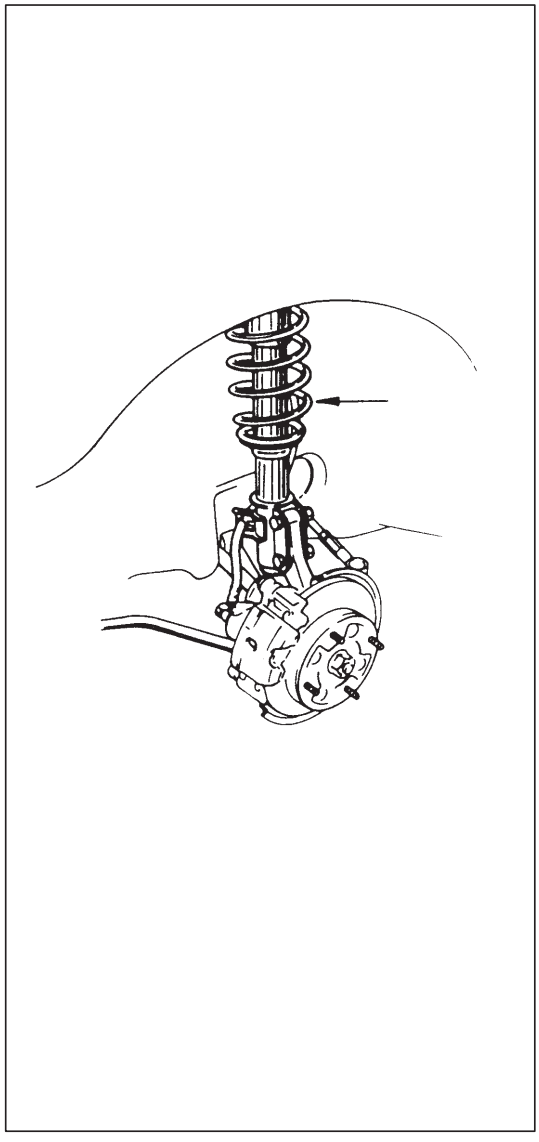

STRUT ASSEMBLY CHECK

1) Inspect strut for oil leakage. If strut is found faulty, replace it as an assembly unit, because it can not be disassembled.
2) Strut function check
   Check and adjust tire pressures as specified. Bounce vehicle body three or four times continuously by pushing front end on the side with strut to be checked. Apply the same amount of force at each push and note strut resistance both when pushed and rebounding.
   Also, note how many times vehicle body rebounds before coming to stop after hands are off. Do the same for strut on the other side.
   Compare strut resistance and number of rebound on the right with those on the left. And they must be equal in both. With proper strut, vehicle body should come to stop the moment hands are off or after only one or two small rebounds. If struts are suspected, compare them with known good vehicle or strut.
3) Inspect for damage or deformation.
4) Inspect bearing for wear, abnormal noise or gripping.
5) Inspect for cracks or deformation in the spring seat.
6) Inspect for deterioration of the bump stopper.
7) Inspect strut support for wear, cracks or deformation.

Replace any parts found defective in steps 2) – 7).

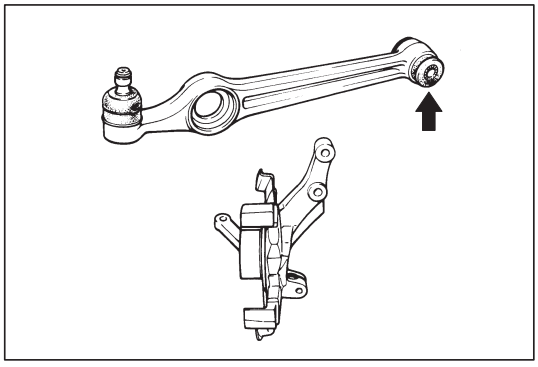

SUSPENSION CONTROL ARM/KNUCKLE CHECK

Inspect control arm/knuckle for cracks, deformation or damage.
Inspect control arm bushing for damage, wear or deterioration.

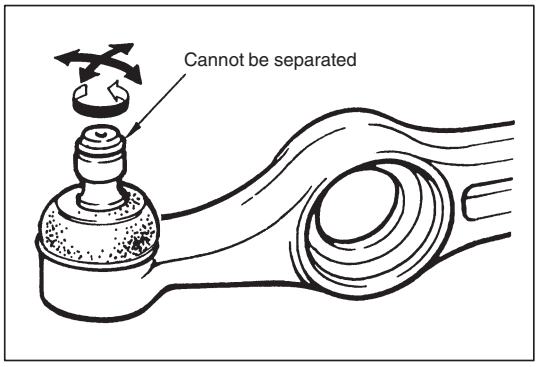

SUSPENSION CONTROL ARM JOINT CHECK

1) Check for smooth rotation.
2) Inspect ball stud for damage.
3) Inspect dust cover for damage.
4) Inspect for play in ball joint. If found defective, replace.

   NOTE:
   Suspension arm and arm joint cannot be separated.

If there is any damage to either, control arm assembly must be replaced as a complete unit.

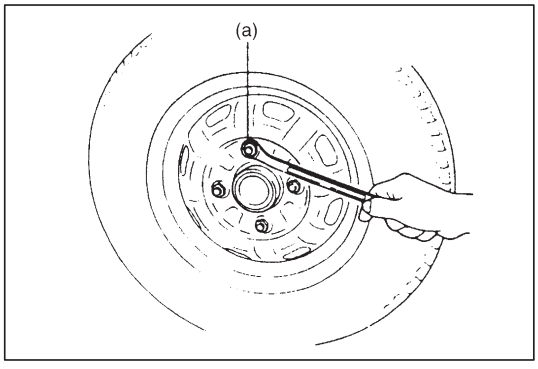

WHEEL DISC, NUT & BEARING CHECK

1) Inspect each wheel disc for dents, distortion and cracks. A disc in badly damaged condition must be replaced.
2) Check wheel nuts for tightness and, as necessary retighten them to specification.

   Tightening Torque
   (a): 85 N·m (8.5 kg-m, 61.5 lb-ft)

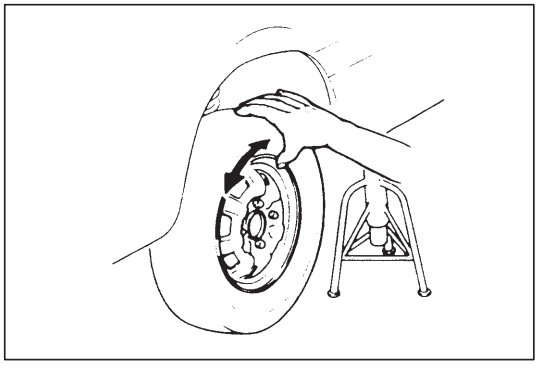

3) By rotating wheel actually, check wheel bearing for noise and smooth rotation. If defective, replace bearing.

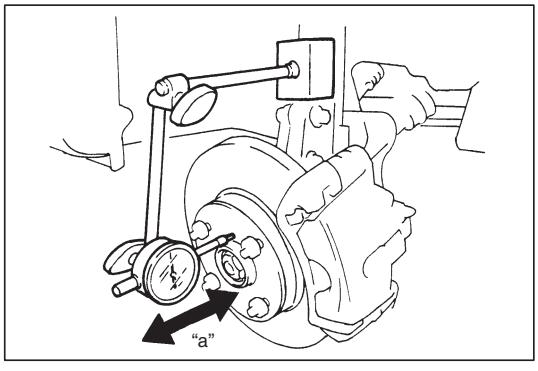

4) Check wheel bearing for wear. When measuring thrust play,
   a) Remove wheel.
   b) Fix brake disc tightening wheel nuts.
   c) Set a dial gauge.
   d) Check wheel bearing for thrust play.

   Thrust play limit "a": 0.1 mm (0.004 in.)

   When measurement exceeds limit, replace bearing.

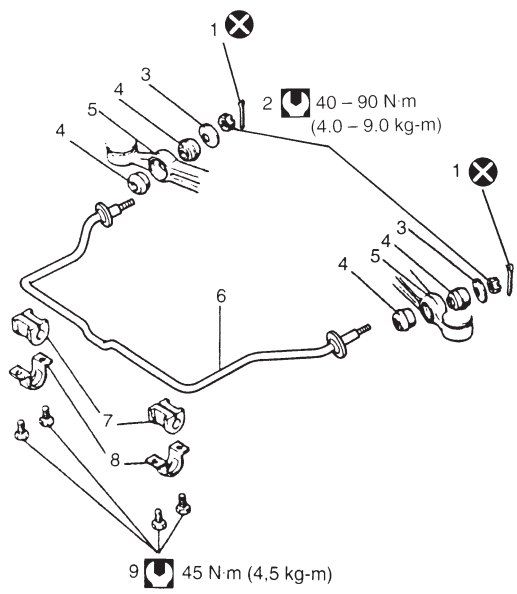

: Tightening Torque
: Do not reuse

1. Split pin
2. Castle nut
3. Stabilizer bar washer
4. Stabilizer bar bushing
5. Suspension control arm
6. Stabilizer bar
7. Mount bushing
8. Mount bush bracket
9. Mount bracket bolt

ON-VEHICLE SERVICE

STABILIZER BAR AND/OR BUSHINGS

REMOVAL

1) Hoist vehicle and allow the front suspension control arms (5) to hang free.
2) Remove front wheels.
3) Remove split pins (1) and then castle nuts (2).
4) Remove stabilizer bar mount bushing bracket bolts (9).
5) Remove stabilizer bar (6) from front suspension control arms (5).

NOTE:
If it is hard to remove stabilizer bar (6), set tires in contact with ground (with suspension compressed).

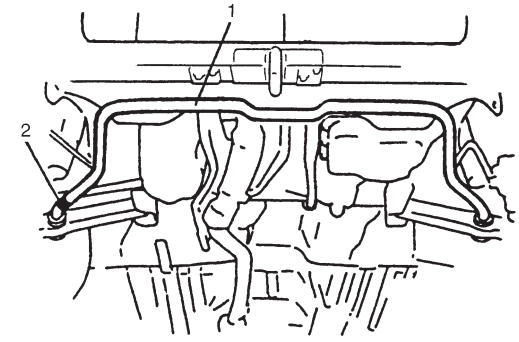

INSTALLATION

For installation, reverse removal procedure, observing the following instructions.

- Install stabilizer bar (1) so that paint mark (2) on it comes to the right side of vehicle.

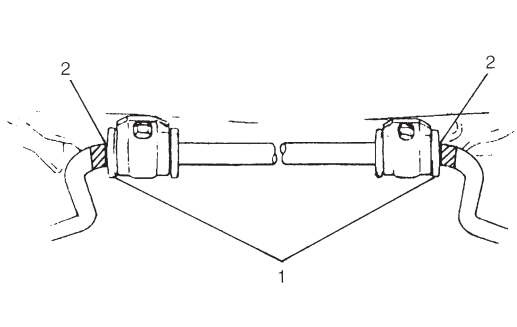

- Align the outside edge (1) of mount bushing with the inside edge (2) of paint as shown in figure.

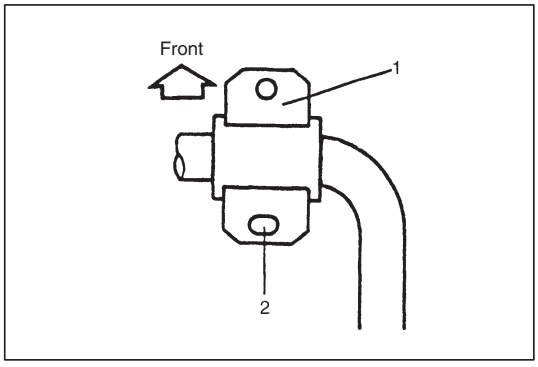

- Install mounting bracket (1) so that its oblong hole side (2) comes to the rear.
- Tighten stabilizer bar bracket bolts to specified torque.

Tightening torque for stabilizer bar bracket bolts:
45 N·m (4.5 kg-m, 32.5 lb-ft)

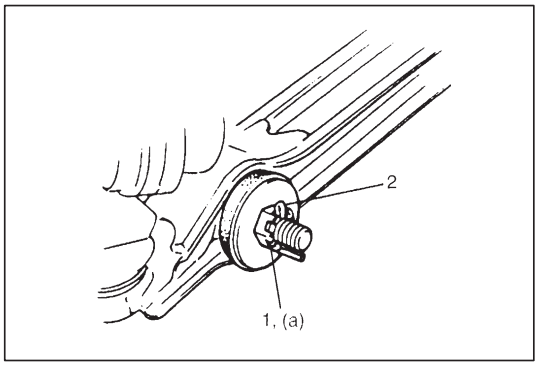

- After tightening castle nut (1) to specified torque, install new split pin (2) as shown.

Tightening Torque
(a): 40 – 90 N·m (4.0 – 9.0 kg-m, 29.0 – 65.0 lb-ft)

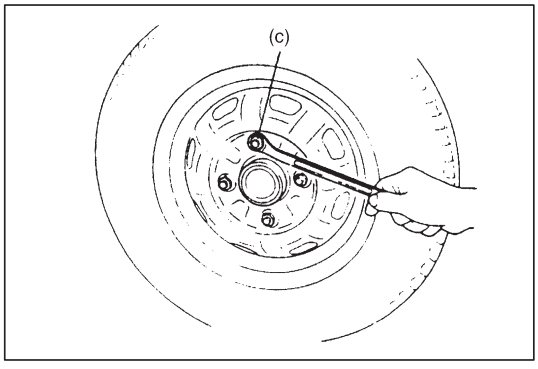

- Install wheels and tighten wheel nuts to specified torque.

Tightening Torque
(c): 85 N·m (8.5 kg-m, 61.5 lb-ft)

STRUT ASSEMBLY

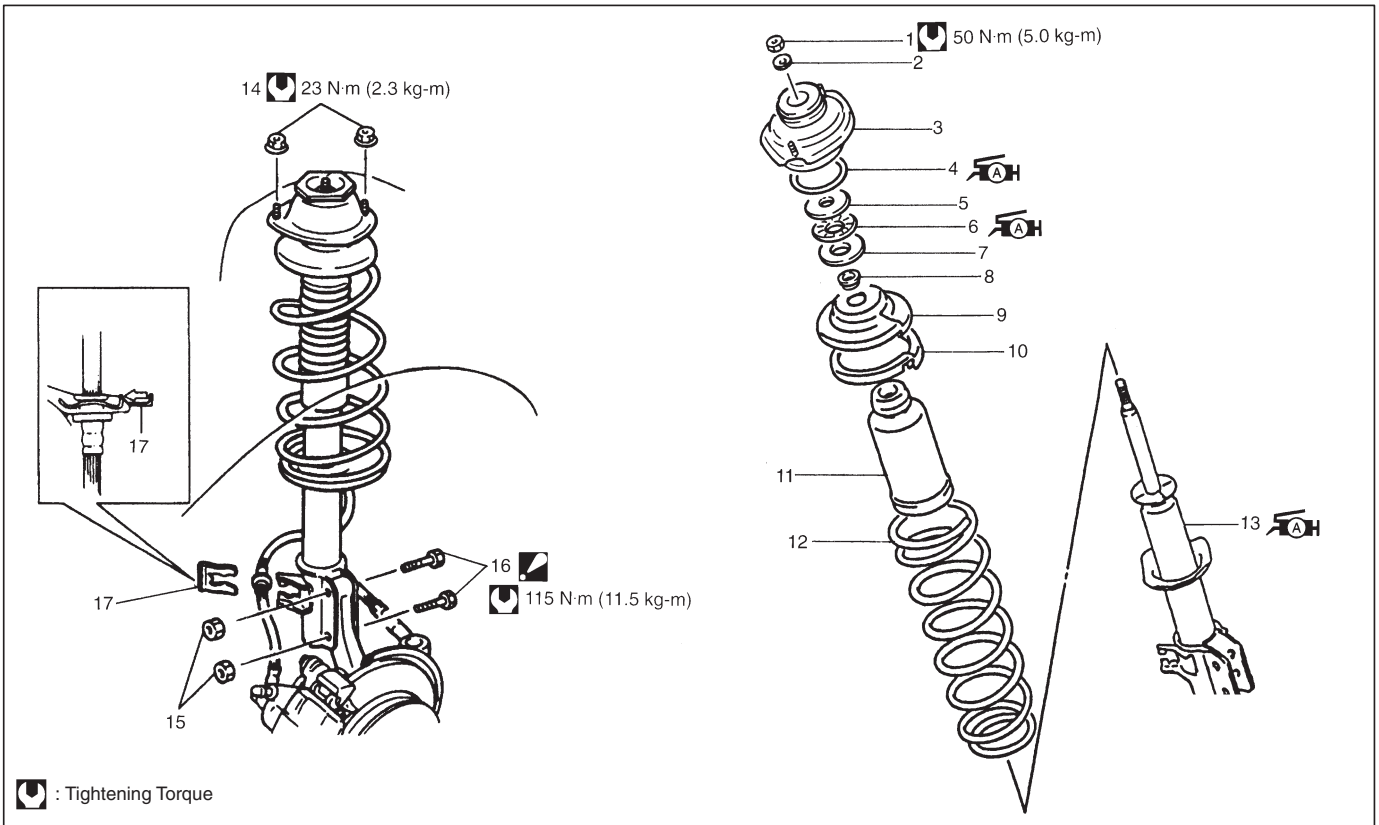

: Tightening Torque

1. Strut nut
2. Strut rock washer
3. Strut support
4. Bearing seal: Apply SUZUKI SUPER GREASE A 99000-25010
5. Bearing upper washer
6. Strut bearing: Apply SUZUKI SUPER GREASE A 99000-25010
7. Bearing lower washer
8. Bearing spacer
9. Coil spring upper seat
10. Coil spring seat
11. Bump stopper
12. Coil spring
13. Shock absorber: Apply SUZUKI SUPER GREASE A 99000-25010 to sliding part of rod.
14. Strut support nut
15. Strut bracket nut
16. Strut bracket bolt: Insert from the direction as shown.
17. E-ring

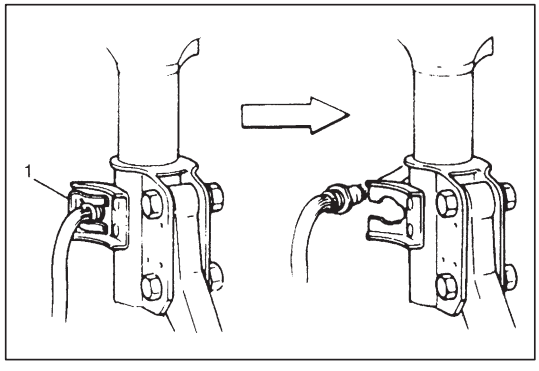

REMOVAL

1) Disconnect negative cable at battery.
2) Remove air cleaner assembly (if removing right side strut), referring to SECTION 6A1.
3) Hoist vehicle, allowing front suspension to hang free.
4) Remove wheel.
5) Remove E-ring (1) securing brake flexible hose and take brake flexible hose off strut bracket as shown.

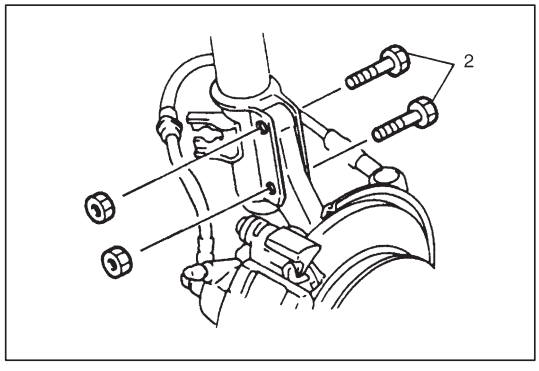

6) Remove wheel speed sensor harness clamp bolt from strut (if equipped).
7) Remove strut bracket bolts (2).

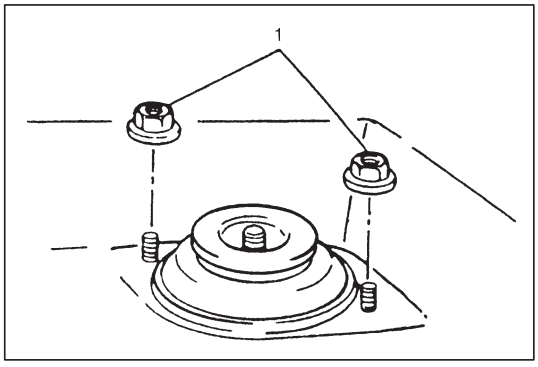

8) Remove strut support nuts (1).
   Hold strut by hand so that it will not fall off.
9) Remove strut assembly.

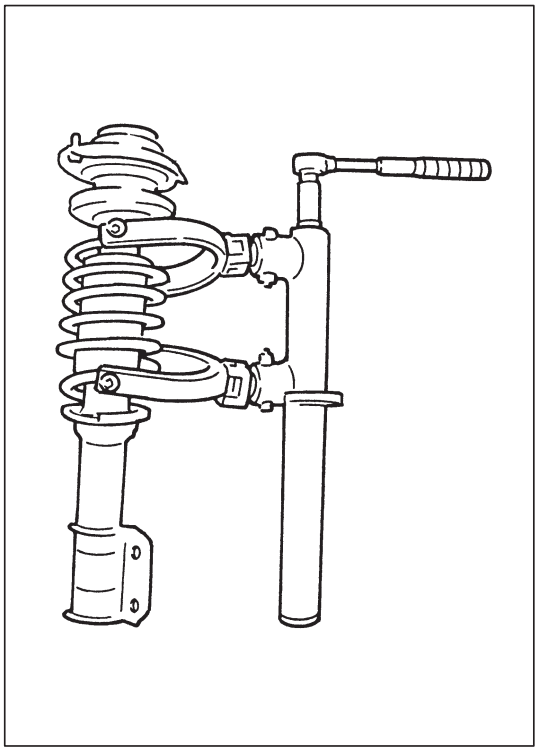

DISASSEMBLY

1) Using a spring compressor, compress the strut spring till its force pressing the spring seat is released.

> **CAUTION:**
> **Use a commercially available spring compressor and follow the operation procedure described in the Instruction Manual supplied with that spring compressor.**

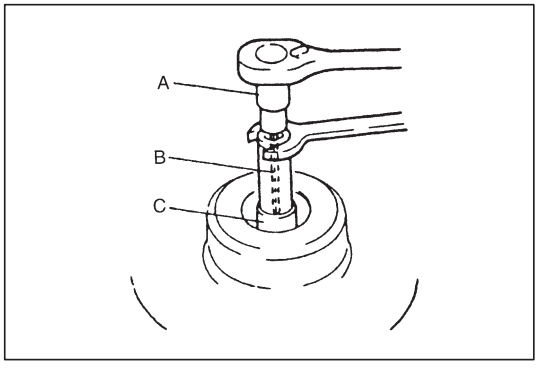

2) While keeping spring compressed with spring compressor, remove strut nut with special tools.

   Special Tool
   (A): 09900-00411
   (B): 09900-00414
   (C): 09945-26010

3) Disassemble strut assembly.

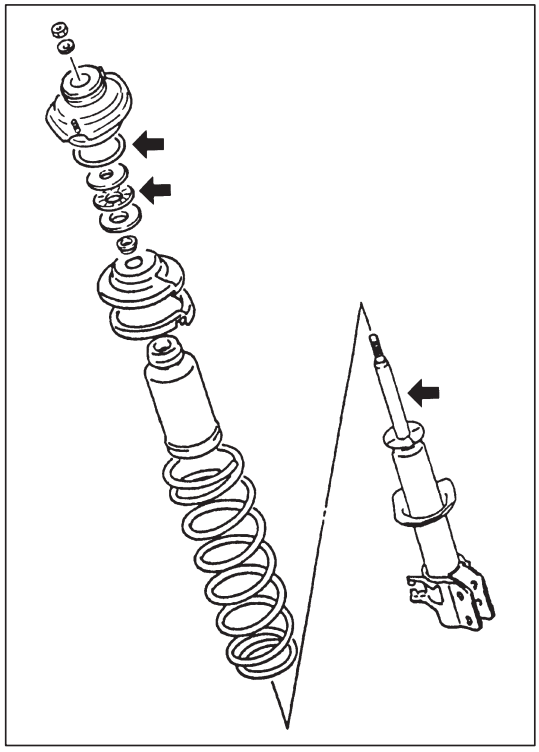

ASSEMBLY

For assembly, reverse disassembly procedure, observing following instructions.

- Apply grease to bearing seal, strut bearing and sliding part of strut rod.

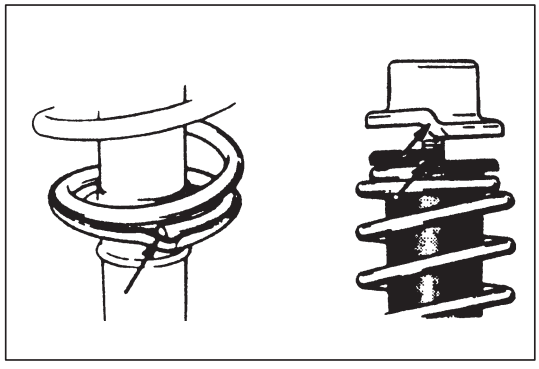

- Mate spring end with stepped part of spring lower seat as shown.
- Install spring seat, mating stepped part of seat with spring upper end as shown.

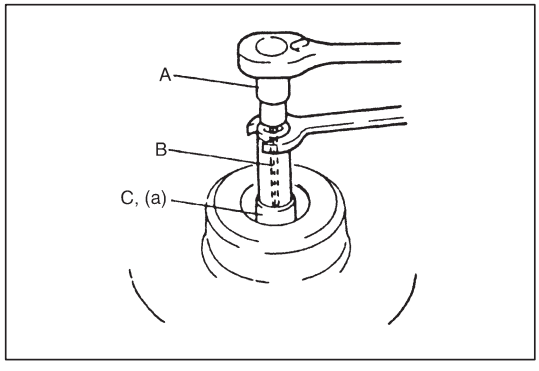

- Using special tools, tighten strut nut to specified torque.

Special Tool
(A): 09900-00411
(B): 09900-00414
(C): 09945-26010

Tightening Torque
(a): 50 N·m (5.0 kg-m, 36.0 lb-ft)

INSTALLATION

- Install strut assembly by reversing REMOVAL procedure.

> **CAUTION:**
> **Don't twist brake hose when installing it.**
> **Install E-ring as far as it fits to bracket as shown.**

- Torque all fasteners to specification, referring to assembly figure on 3D-7.

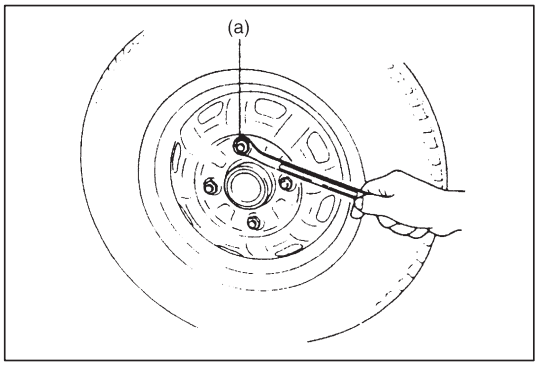

- Install wheel and tighten wheel nuts to specified torque.

  Tightening Torque
  (a) 85 N·m (8.5 kg-m, 61.5 lb-ft)

- Confirm front end (wheel) alignment, referring to SECTION 3A.

STEERING KNUCKLE/BEARING

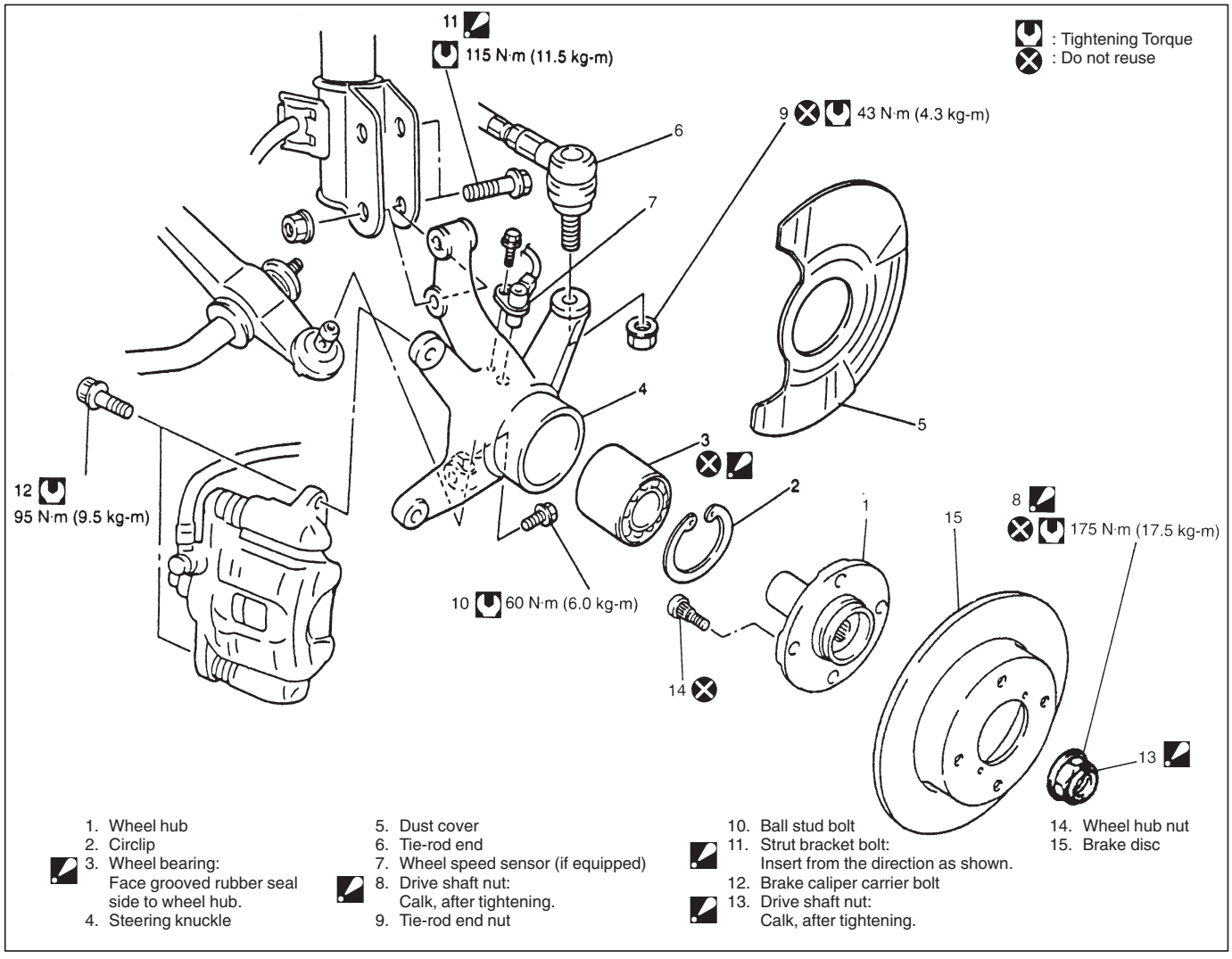

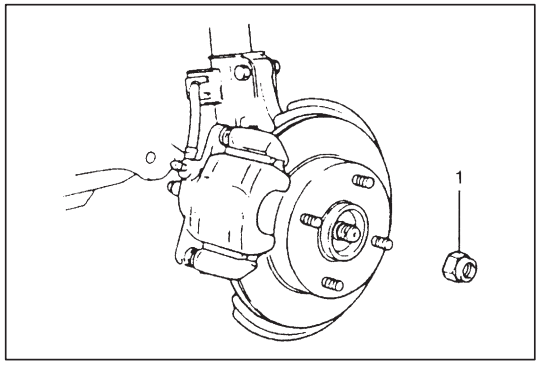

REMOVAL

1) Hoist vehicle and remove wheel.
2) Uncalk drive shaft nut (1).
3) Depress foot brake pedal and hold it there. Remove drive shaft nut.

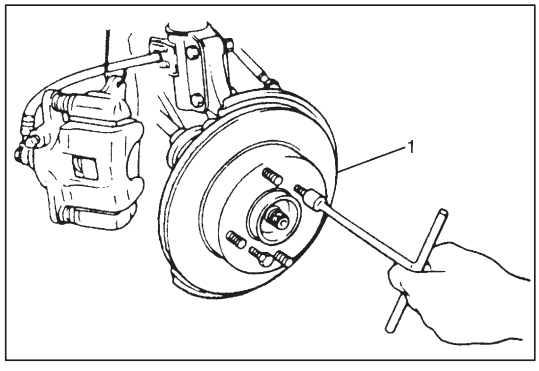

4) Remove caliper carrier bolts.
5) Remove caliper with carrier.

NOTE:
Hang removed caliper with a wire hook of the like so as to prevent brake hose from bending and twisting excessively or being pulled.
Don’t operate brake pedal with pads removed.

6) Pull brake disc (1) off by using two 8 mm bolts.

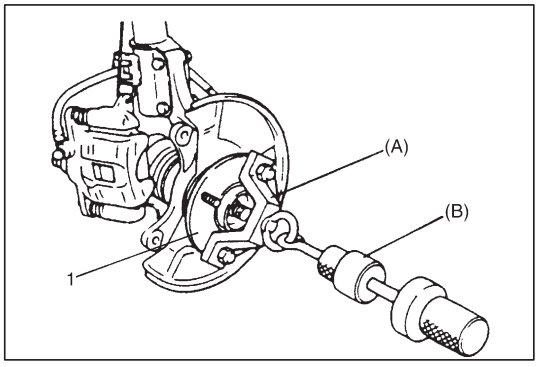

7) Pull out wheel hub (1) with special tools.

Special Tool
(A): 09943-17912
(B): 09942-15511

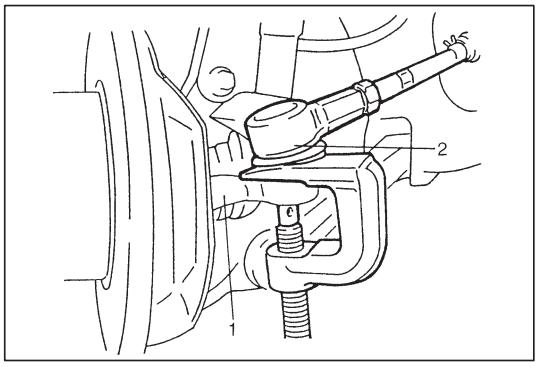

8) Remove tie-rod end nut and disconnect tie-rod end (2) from knuckle (1) with puller.

CAUTION:
Never reuse tie-rod end nut.
Reused nut will not be locked securely.

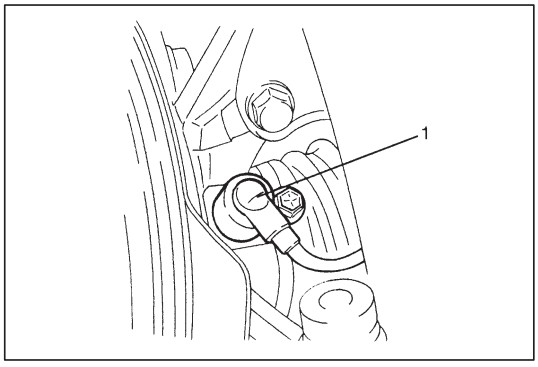

9) Remove wheel speed sensor (1) from knuckle (if equipped).

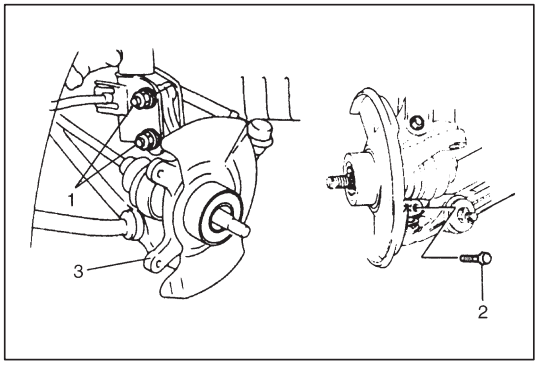

10) Remove strut bracket bolts (1) from strut bracket and then ball stud bolt (2).
11) Remove knuckle (3).

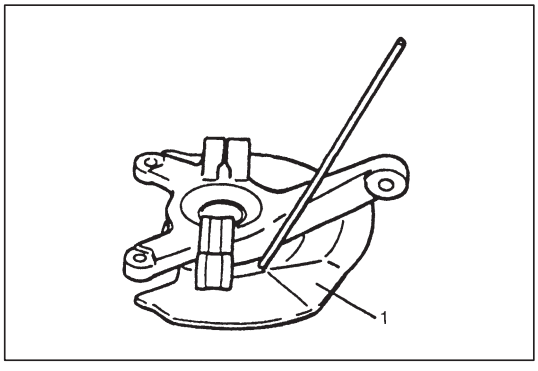

DISASSEMBLY

1) Uncaulk and remove dust cover (1).

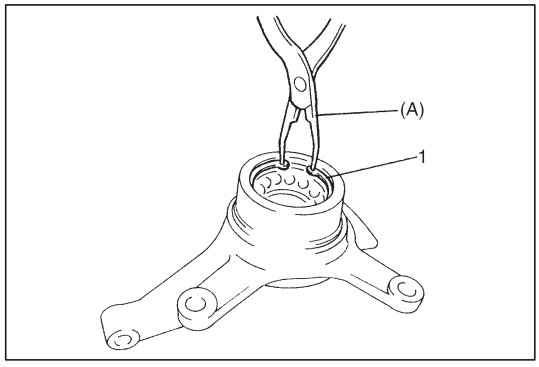

2) Remove circlip (1).

Special Tool
(A): 09900-06108

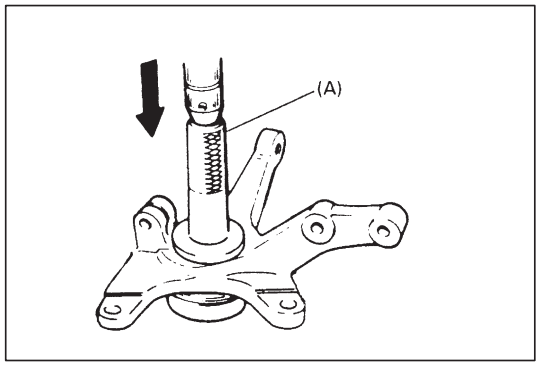

3) Remove wheel bearing using special tool and hydraulic press.

Special Tool
(A): 09913-75810

CAUTION:
- **Never reuse wheel bearing. Reused bearing should have excessive play.**
- **When replacing bearing, inner races or outer race, be sure to replace them with new ones as a set.**

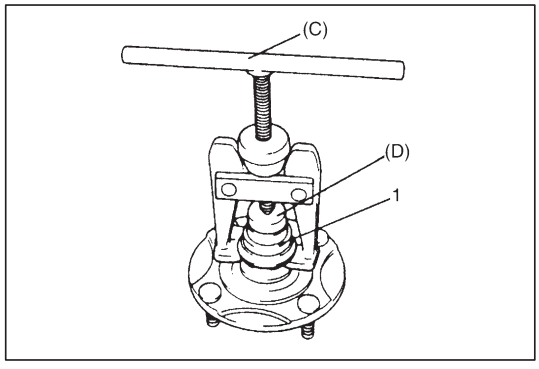

4) Remove wheel bearing inner race (1).

Special Tool
(C): 09913-61110
(D): 09925-88210

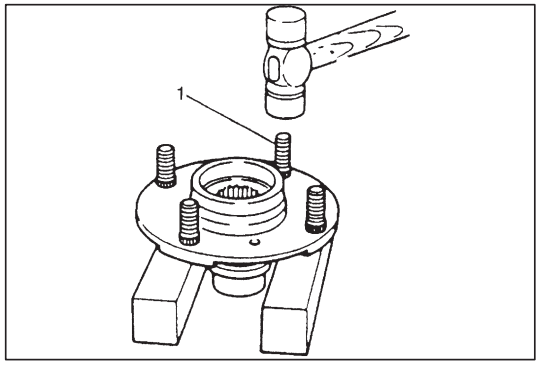

5) Remove hub bolts (1).

CAUTION:
Never remove bolt unless replacement is necessary.
Be sure to use a new bolt for replacement.

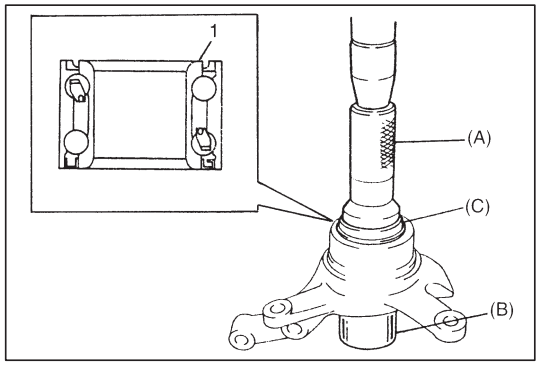

ASSEMBLY

1) Face grooved rubber seal side (1) of new wheel bearing upward as shown and press-fit new wheel bearing into knuckle using special tools.

Special Tool
(A): 09913-75810
(B): 09951-18210
(C): 09924-84510-002

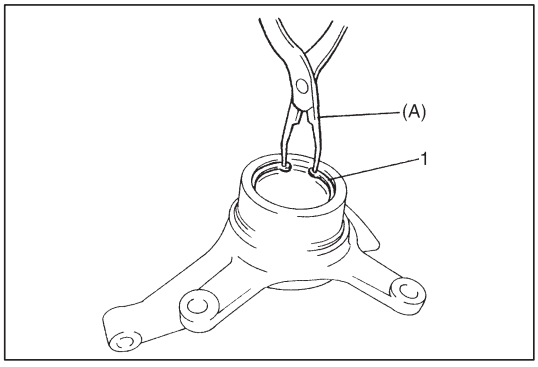

2) Install circlip (1).

Special Tool
(A): 09900-06108

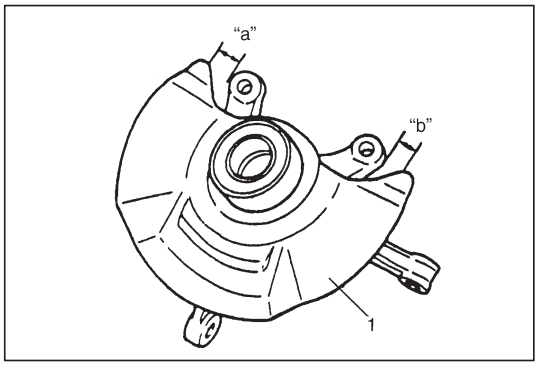

3) Drive in dust cover (1) so that dimensions "a" and "b" become equal as shown.

CAUTION:
When drive in dust cover, be careful not to deform it.

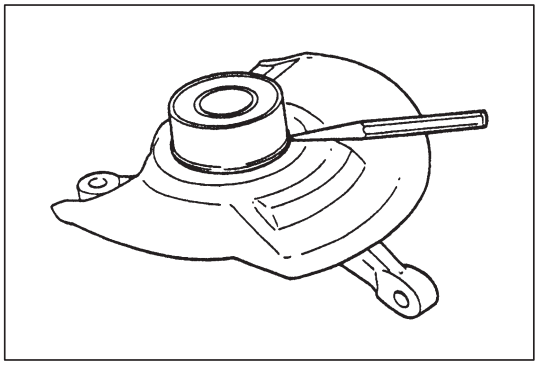

4) Caulk with a punch.

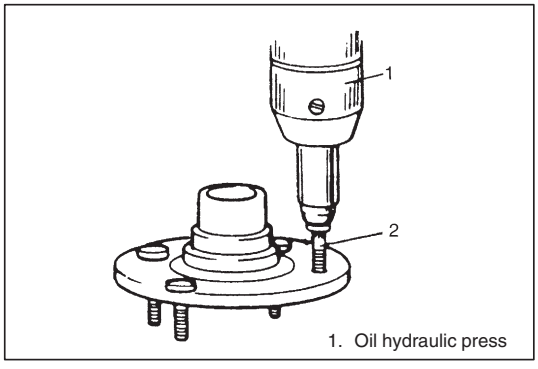

5) Insert new stud (2) in hub hole. Rotate stud (2) slowly to assure serrations are aligned with those made by original bolt.

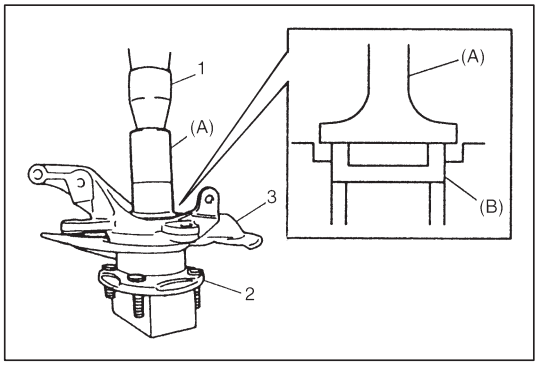

INSTALLATION

1) Using special tools and hydraulic press (1), drive wheel hub (2) into steering knuckle (3) as shown.

Special Tool
(A): 09913-75520
(B): 09944-66020

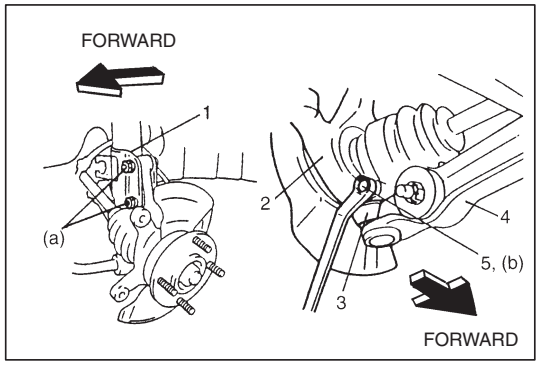

2) Install knuckle (2) to ball stud (3) on suspension control arm (4) and strut bracket (1). Installing direction of each bolt is as shown. Align knuckle bolt hole with ball stud groove and install ball stud bolt (5). Tighten each bolt and nuts to specified torque.

Tightening Torque
(a): 115 N·m (11.5 kg-m, 83.5 lb-ft)
(b): 60 N·m (6.0 kg-m, 43.5 lb-ft)

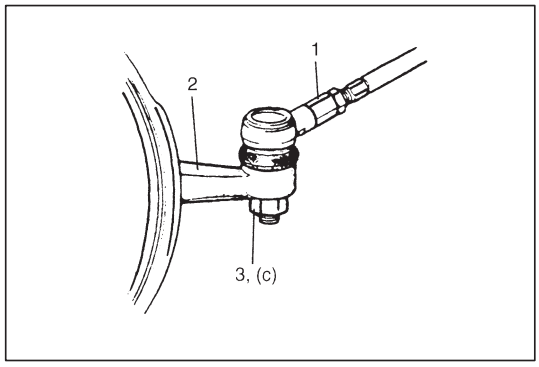

3) Install wheel speed sensor (if equipped).
4) Connect tie-rod end (1) to knuckle (2) and install new tie-rod end nut (3).
Tighten tie-rod end nut to specified torque.

Tightening Torque
(c): 43 N·m (4.3 kg-m, 31.5 lb-ft)

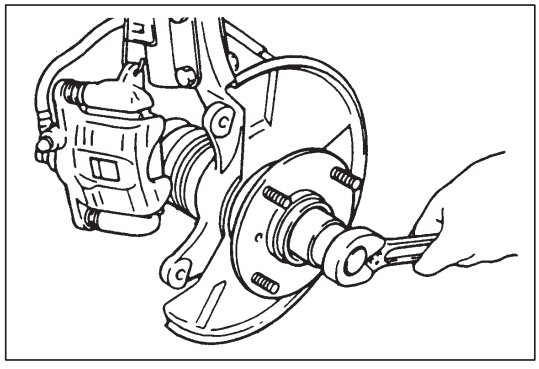

5) Tighten new drive shaft nut temporarily.

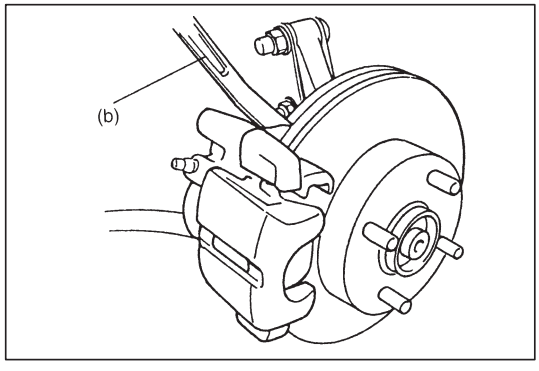

6) Install brake disc.
7) Install brake caliper/caliper carrier.
8) Tighten caliper carrier bolts to specified torque.

Tightening Torque
(b): 95 N·m (9.5 kg-m, 69.0 lb-ft)

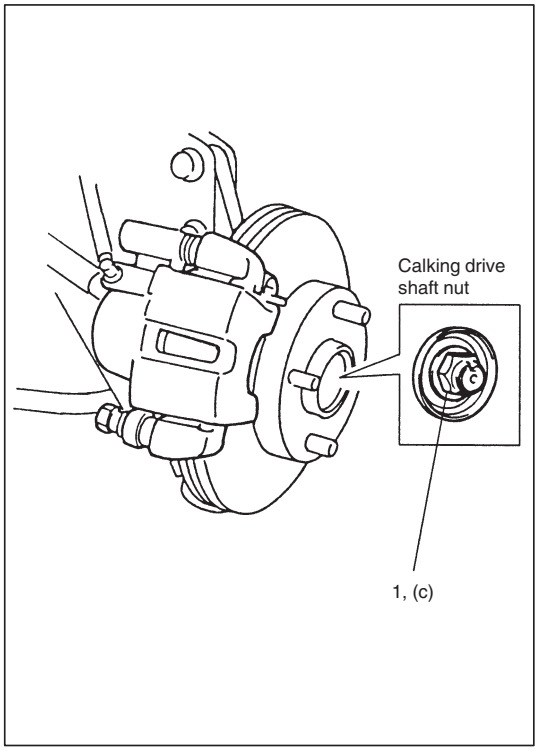

9) Depress foot brake pedal and hold it there.
Tighten new drive shaft nut (1) to specified torque.

Tightening Torque
(c): 175 N·m (17.5 kg-m, 127.0 lb-ft)

10) Calk drive shaft nut as shown.

CAUTION:
Be careful while caulking nut so that no crack will occur in caulked part of nut. Cracked nut must be replaced with new one.

11) Install wheel and tighten wheel nuts to specified torque.

Tightening Torque For Wheel Nuts
85 N·m (8.5 kg-m, 61.5 lb-ft)

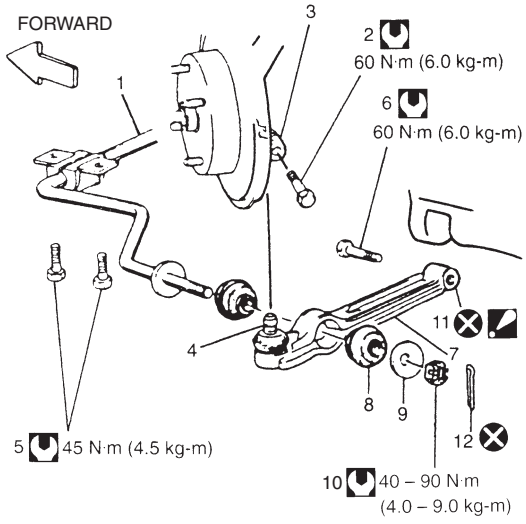

: Tightening Torque
: Do not reuse

1. Stabilizer bar
2. Ball stud bolt
3. Knuckle
4. Ball stud
5. Stabilizer bar bracket bolt
6. Control arm bolt
7. Suspension control arm
8. Stabilizer bar bushing
9. Washer
10. Stabilizer bar castle nut
11. Suspension control arm bushing: Before installing, apply soap water.
12: Split pin

SUSPENSION CONTROL ARM/BUSHING

REMOVAL

1) Hoist vehicle and remove wheel.
2) Remove split pin (12), stabilizer bar castle nut (10), washer (9) and bushing (8).
3) Remove stabilizer bar mount bracket (right & left) bolts (5).
4) Remove ball stud bolt (2).
5) Remove suspension control arm bolt (6).
6) Remove suspension control arm (7).

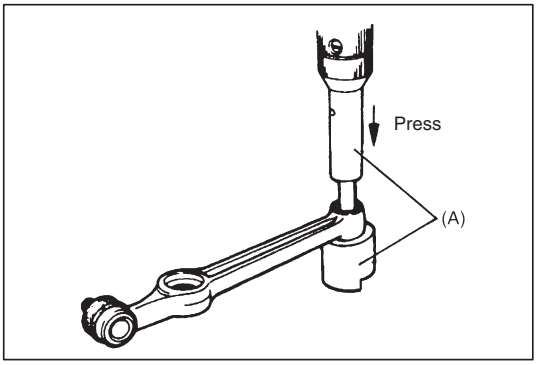

7) Remove bushing.
   Place suspension control arm onto flat surface side of special tool and push out bushing with special tool and oil hydraulic press as shown.

   Special Tool
   (A): 09943-77910

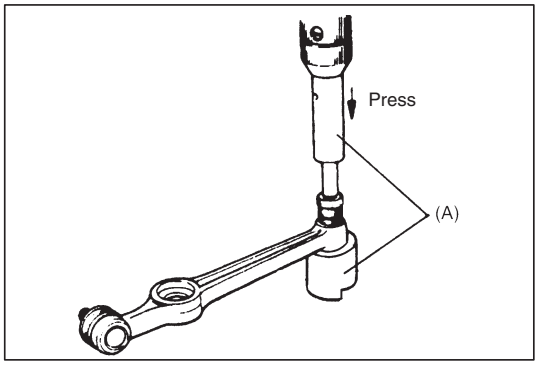

INSTALLATION

1) Place suspension control arm onto flat surface side of special tool and install new bushing with special tool and oil hydraulic press as shown.

Special Tool
(A): 09943-77910

NOTE:
- **Before installing bushing, apply soap water on its circumference to facilitate installation.**
- **When installed, bush should be equal on the right and left of arm as shown.**

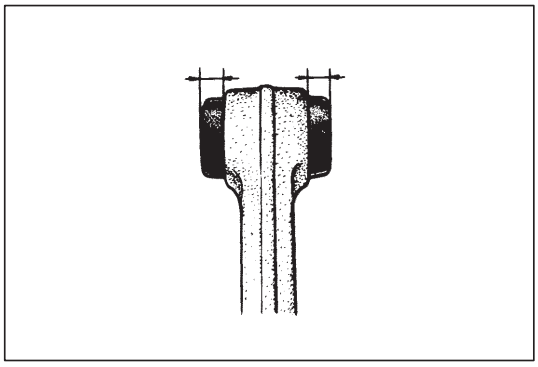

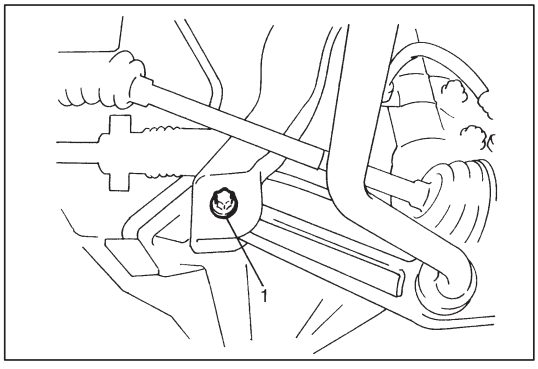

2) Install suspension control arm to vehicle body and tighten suspension control arm bolt (1) temporarily.

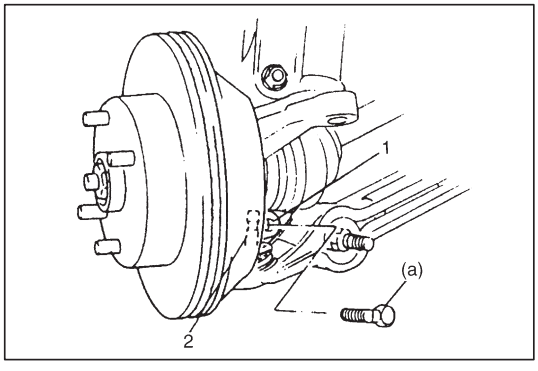

3) Install ball stud (2) to knuckle (1). Align ball stud groove with knuckle bolt hole as shown.
Then install ball stud bolt from the direction as shown. Tighten ball stud bolt to specified torque.

Tightening Torque
(a): 60 N·m (6.0 kg-m, 43.5 lb-ft)

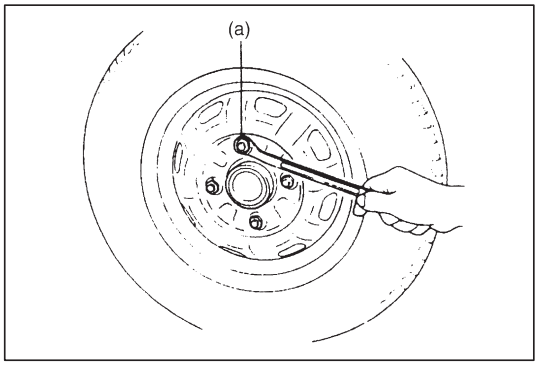

4) Install wheel and tighten wheel nuts to specified torque.

Tightening Torque
(a): 85 N·m (8.5 kg-m, 61.5 lb-ft)

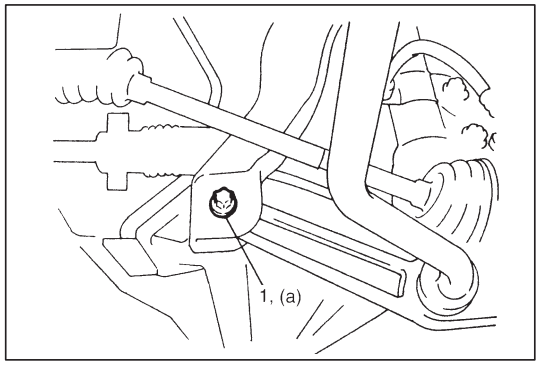

5) Lower hoist and vehicle in non-loaded condition, tighten control arm bolt (1) to specified torque.

Tightening Torque
(a): 60 N·m (6.0 kg-m, 43.5 lb-ft)

- Install stabilizer bar, referring to STABILIZER BAR INSTALLATION in this section.

REQUIRED SERVICE MATERIAL

MATERIAL	RECOMMENDED SUZUKI PRODUCT	USE
Lithic wheel bearing grease	SUZUKI SUPER GREASE (A) (99000-25010)	● Outside inner race ● Bearing seal ● Strut bearing ● Sliding part of strut rod

SPECIAL TOOLS

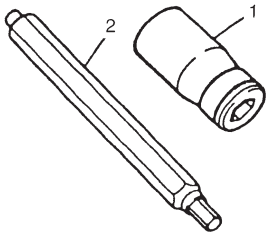 1. 09900-00411 Hexagon wrench socket 2. 09900-00414 Hexagon wrench bit (6 mm)	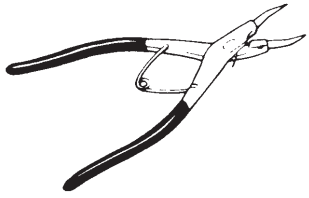 09900-06108 Snap ring pliers (closing type)	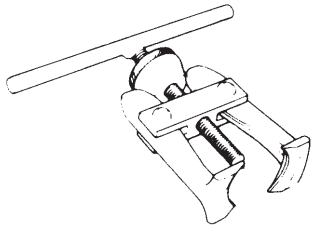 09913-61110 Bearing puller	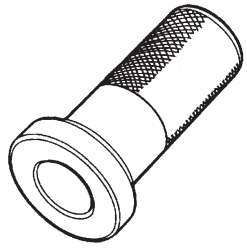 09913-75810 Bearing installer
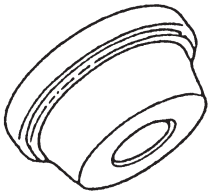 09924-84510-002 Bearing installer attachment	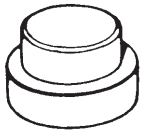 09925-88210 Bearing puller attachment	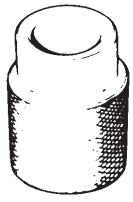 09940-53111 Bearing installer	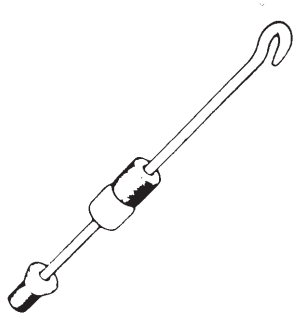 09942-15511 Sliding hammer
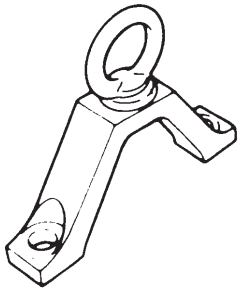 09943-17912 Front wheel hub remover (Brake drum remover)	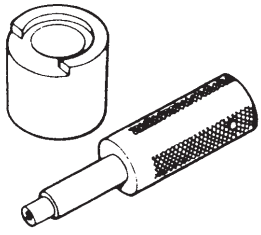 09943-77910 Control bush remover	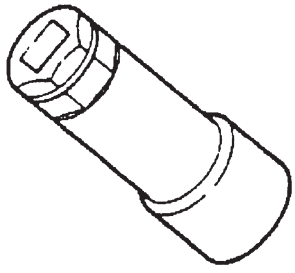 09945-26010 17 mm Socket wrench	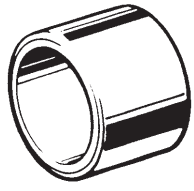 09951-18210 Bearing installer support

SECTION 3E

REAR SUSPENSION

NOTE:

- **All suspension fasteners are an important attaching part in that it could affect the performance of vital parts and systems, and/or could result in major repair expense. They must be replaced with one of the same part number or with an equivalent part if replacement becomes necessary. Do not use a replacement part of lesser quality or substitute design. Torque values must be used as specified during reassembly to assure proper retention of this part.**
- **Never attempt to heat, quench or straighten any suspension part. Replace it with a new part, or damage to the part may result.**

CONTENTS

GENERAL DESCRIPTION

Rear suspension is Isolated Trailing Link (I.T.L.) type which consists of coil springs, rear axle, shock absorbers, lateral rod and trailing arms.
The lateral rod is installed to the body and axle by using bushes so as to prevent axle movement in the lateral direction.
The trailing arms which are connected with the axle are installed to the body by using a bush so that axle moves up and down with the bush as its supporting point.
The shock absorber is installed between the body and axle to absorb up-and-down movement of the vehicle body.

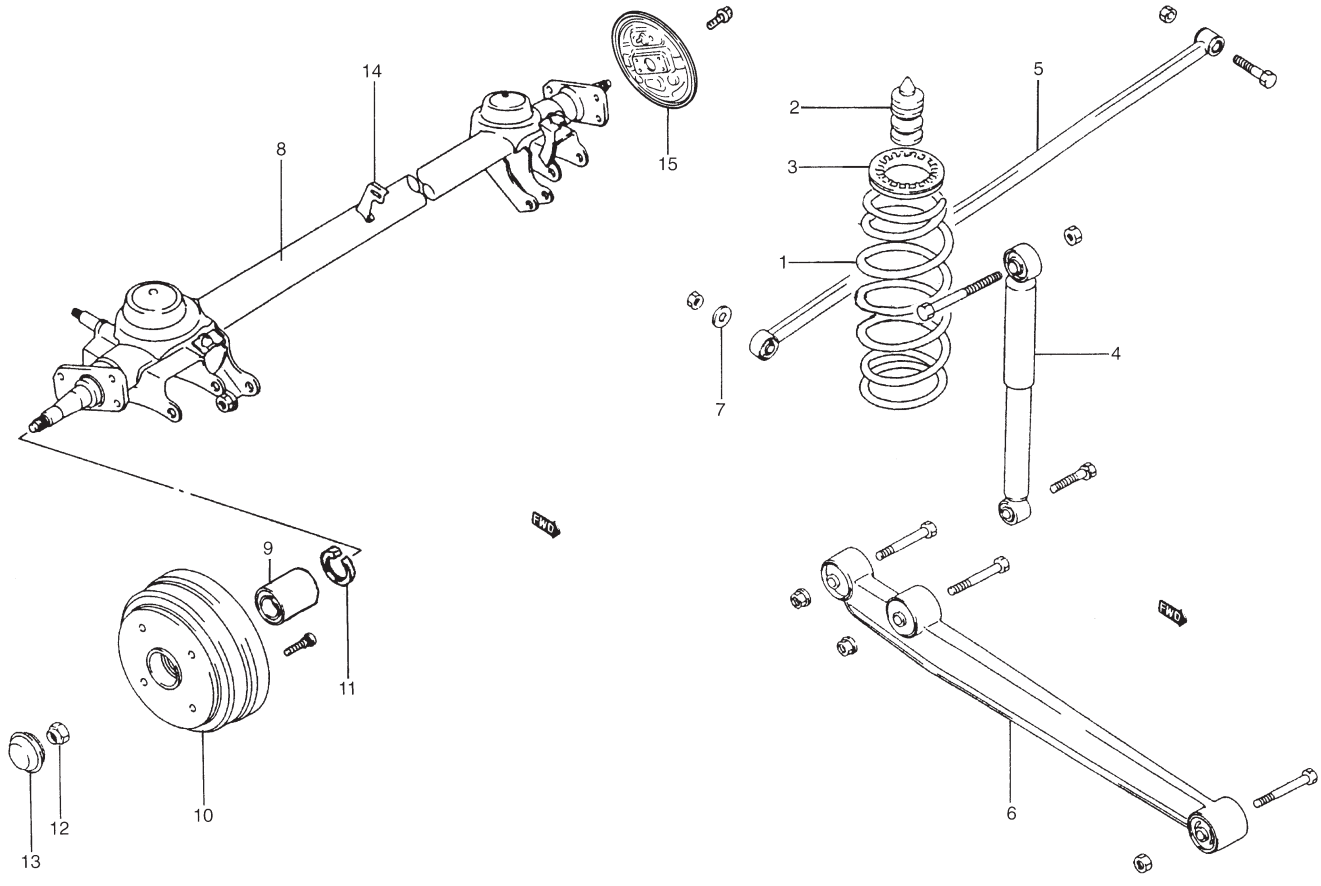

1. Rear coil spring
2. Rear bump stopper
3. Rear spring upper seat
4. Rear shock absorber
5. Lateral rod
6. Trailing arm
7. Lateral rod outer washer
8. Rear axle
9. Bearing
10. Brake drum
11. Circlip
12. Spindle nut
13. Spindle cap
14. LSPV bracket (only vehicle with LSPV)
15. Brake back plate

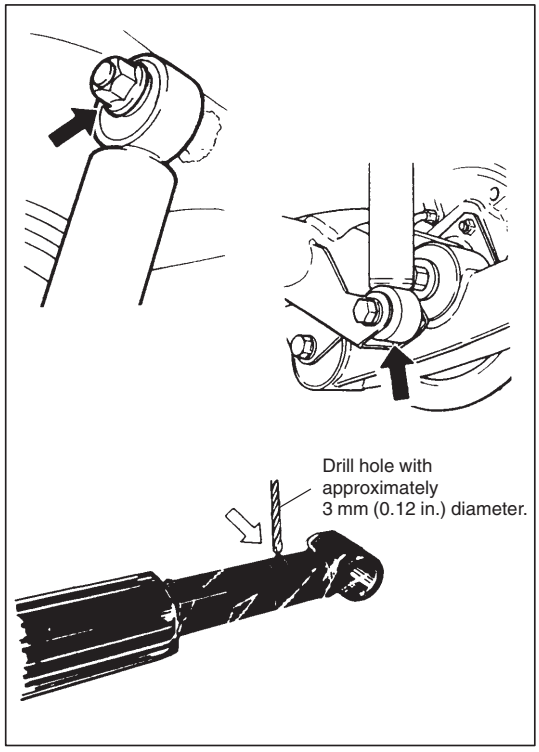

DIAGNOSIS

DIAGNOSIS TABLE

Refer to SECTION 3.

REAR SHOCK ABSORBER CHECK

- Inspect for deformation or damage.
- Inspect bushings for wear or damage.
- Inspect for evidence of oil leakage.

Replace any defective part.

WARNING:
When handling rear shock absorber in which high-pressure gas is sealed, make sure to observe the following precautions.
- **Don't disassemble it.**
- **Don't put it into the fire.**
- **Don't store it where it gets hot.**
- **Before disposing it, be sure to drill a hole in it where shown by an arrow in figure and let gas and oil out.**
  Lay it down sideways for this work.
  The gas itself is harmless but it may issue out of the hole together with chips generated by the drill. Therefore, be sure to wear goggle.

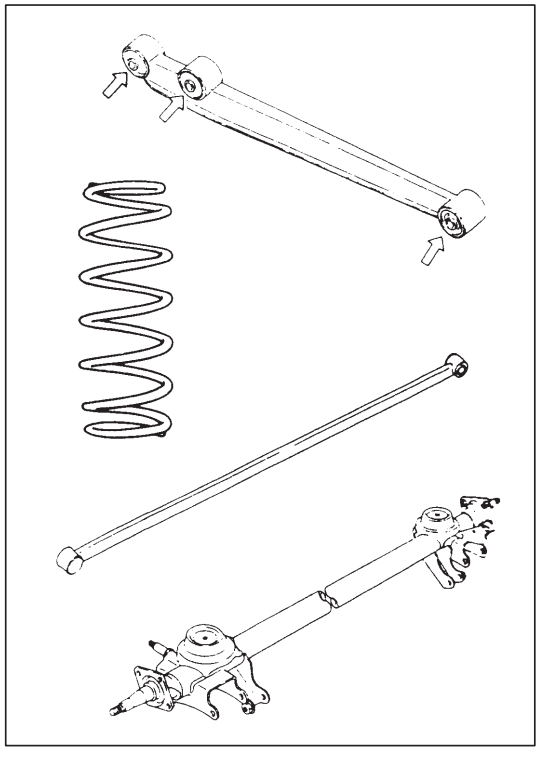

TRAILING ARM, LATERAL ROD, REAR AXLE AND COIL SPRING CHECK

- Inspect for cracks, deformation or damage.
- Inspect bushing for damage, wear or breakage.

  Replace any defective part.

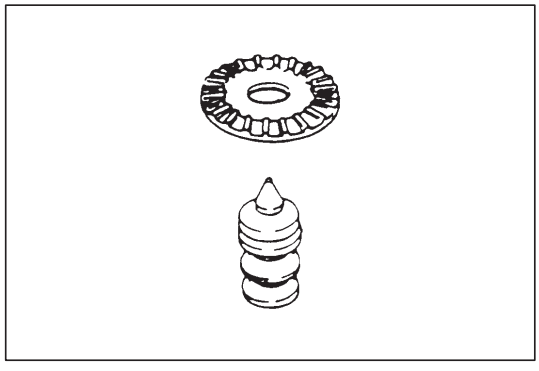

BUMP STOPPER/SPRING UPPER SEAT CHECK

- Inspect for cracks, deformation or damage.

  Replace any defective part.

REAR SUSPENSION FASTENERS CHECK

Check each bolt and nut fastening suspension parts for tightness. Tighten loose one, if any, to specified torque, referring to ON-VEHICLE SERVICE in this section.

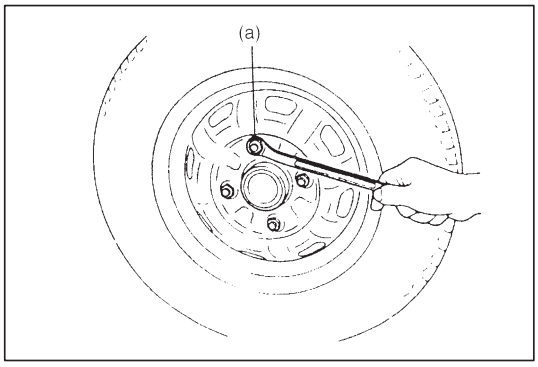

WHEEL DISC, NUT & BEARING CHECK

- Inspect each wheel disc for dents, distortion and cracks. A disc in badly damaged condition must be replaced.
- Check wheel nuts for tightness and, as necessary, retighten to specification.

Tightening Torque
(a): 85 N·m (8.5 kg-m, 61.5 lb-ft)

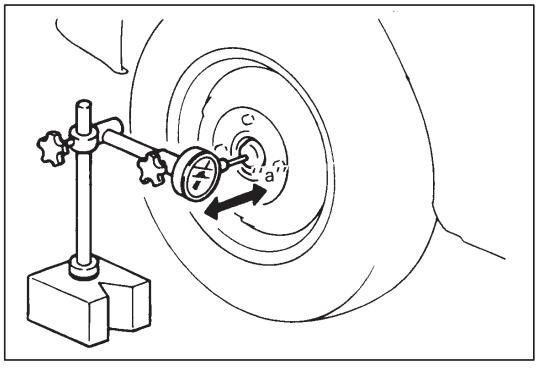

- Check wheel bearings for wear. When measuring thrust play, apply a dial gauge to spindle cap center.

Thrust play limit “a”: 0.1 mm (0.004 in.)

When measurement exceeds limit, replace bearing.

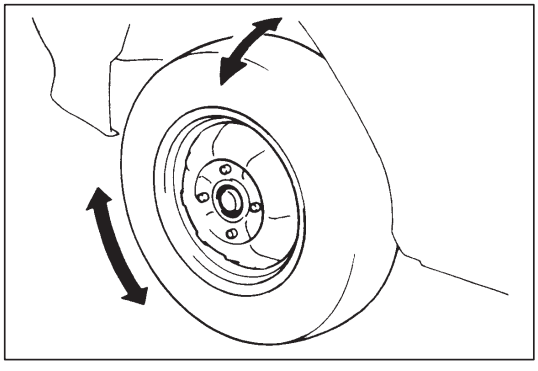

- By rotating wheel actually, check wheel bearing for noise and smooth rotation. If it is defective, replace bearing.

ON-VEHICLE SERVICE

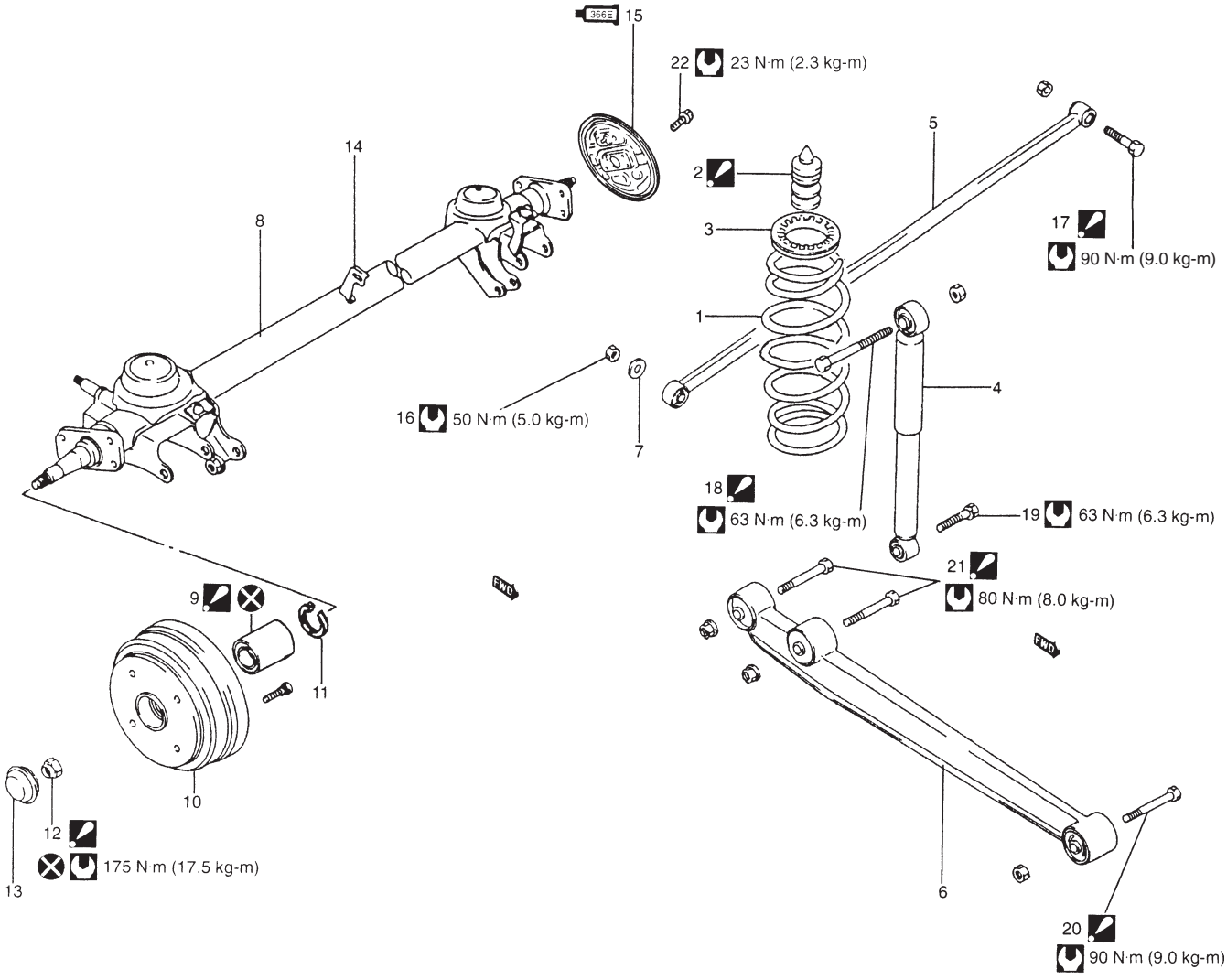

1. Rear coil spring
2. Rear bump stopper: Apply soap water, when installing.
3. Rear spring upper seat
4. Rear shock absorber
5. Lateral rod
6. Trailing arm
7. Lateral rod outer washer
8. Rear axle
9. Bearing: Seal side of bearing comes inside of brake drum.
10. Brake drum
11. Circlip
12. Spindle nut: Caulk, after tightening.
13. Spindle cap
14. LSPV bracket (only vehicle with LSPV)
15. Brake back plate: Apply water tight sealant 99000-31090 to joint of plate and axle.
16. Lateral rod axle side nut
17. Lateral rod body side bolt: Insert from the direction as shown
18. Shock absorber upper bolt: Insert from vehicle outside.
19. Shock absorber lower bolt
20. Trailing arm front bolt: Insert from vehicle inside.
21. Trailing arm rear bolt: Insert from vehicle inside.
22. Brake back plate bolt

: Tightening Torque
: Do not reuse

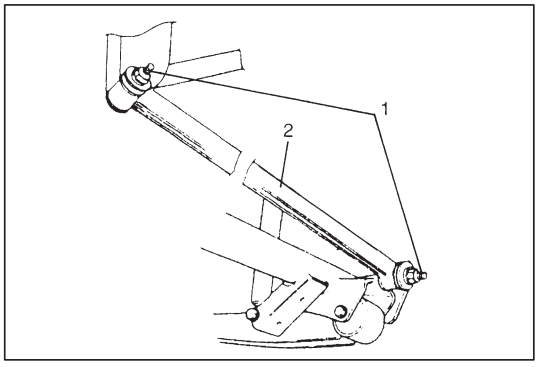

LATERAL ROD

REMOVAL

1) Hoist vehicle.
2) Remove lateral rod nuts (1).
3) Remove lateral rod (2).

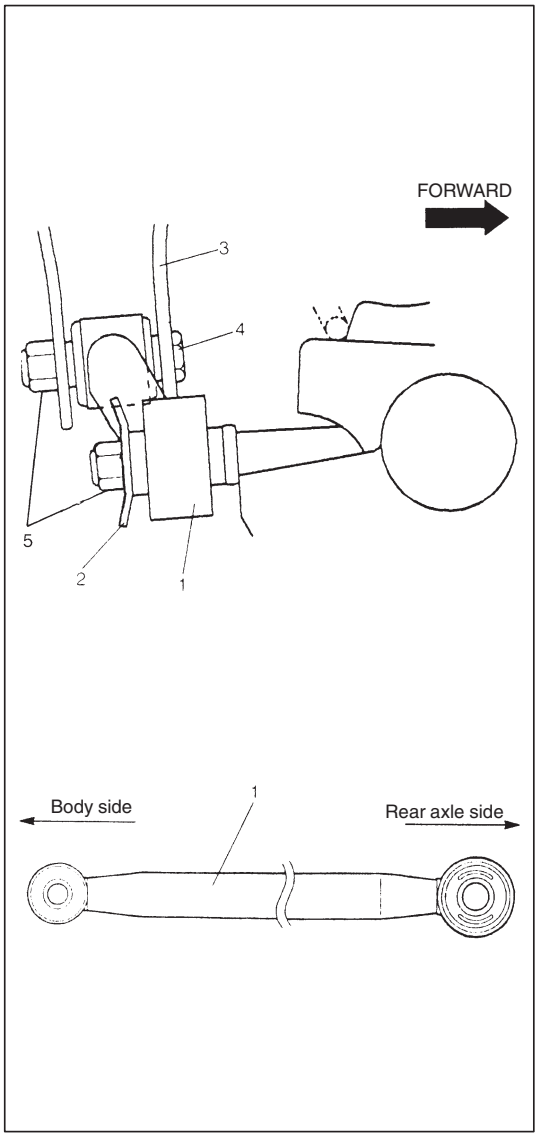

INSTALLATION

1) Install lateral rod (1) to rear axle and vehicle body (3) referring to figure for proper installing direction of bolt (4) and washer (2). Tighten nuts (5) temporarily by hand.

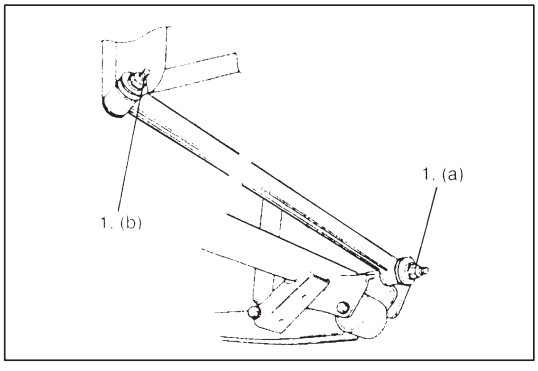

2) Lower hoist.
3) Tighten lateral rod nuts (1) to specified torque. It is the most desirable to have vehicle off hoist and in non-loaded condition when tightening them.

Tightening Torque
(a): 50 N·m (5.0 kg-m, 36.5 lb-ft)
(b): 90 N·m (9.0 kg-m, 65.0 lb-ft)

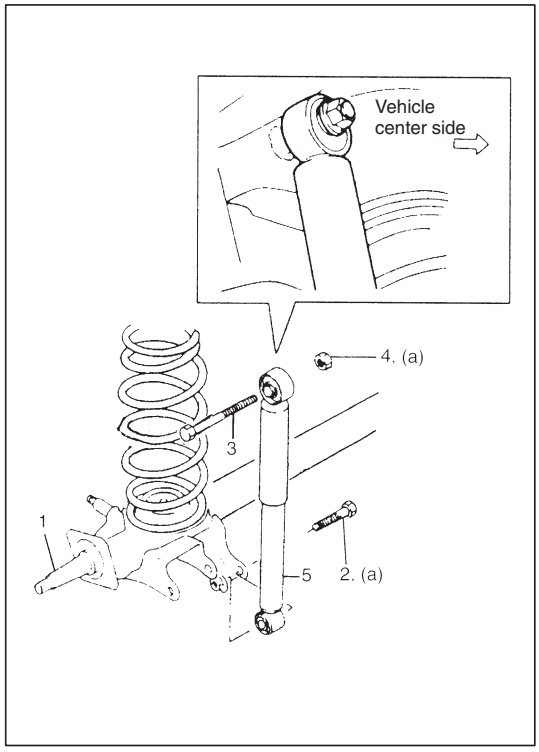

REAR SHOCK ABSORBER

REMOVAL

1) Hoist vehicle.
2) Support rear axle (1) by using floor jack to prevent it from lowering.
3) Remove lower bolt (2).
4) Remove upper bolt (3) and nut (4). Then remove shock absorber (5).

INSTALLATION

1) Install shock absorber (5), referring to left figure.
   Tighten bolt and nut temporarily by hand.
2) Remove floor jack from rear axle (1) and lower hoist.
3) Tighten bolts to specified torque.

   Tightening Torque
   (a): 63 N·m (6.3 kg-m, 45.5 lb-ft)

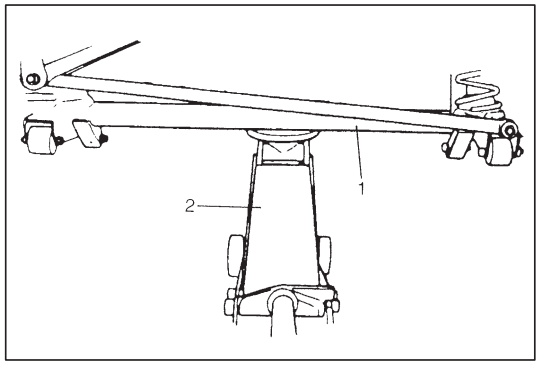

COIL SPRING

REMOVAL

1) Hoist vehicle and remove rear wheel (s).
2) Support rear axle (1) by using floor jack (2) to prevent it from lowering.

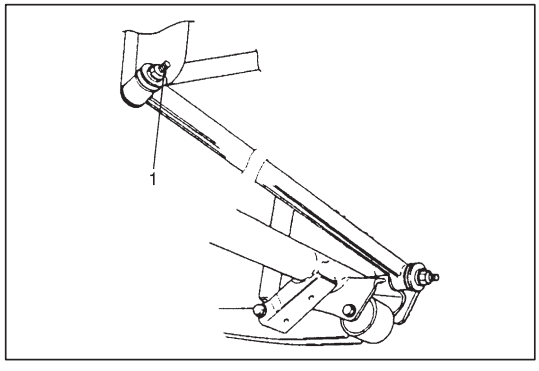

3) Remove lateral rod body side bolt and nut (1).

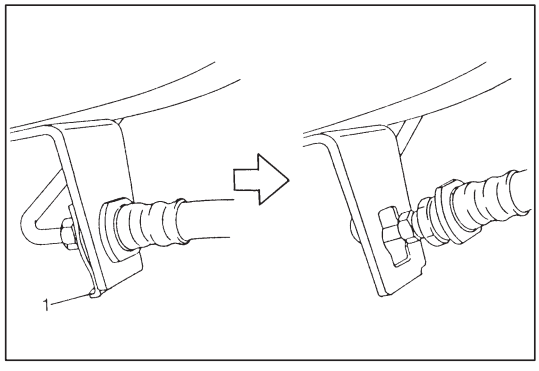

4) Remove brake flexible hose E-ring (1).

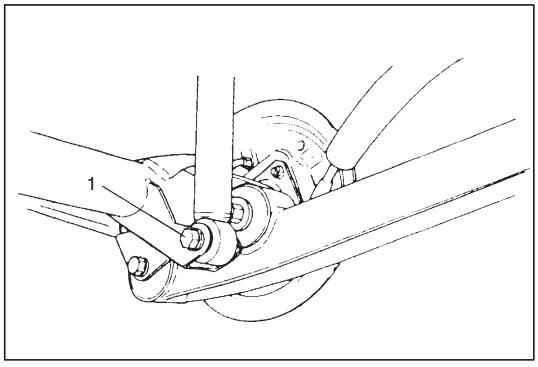

5) Remove shock absorber lower bolt (1).

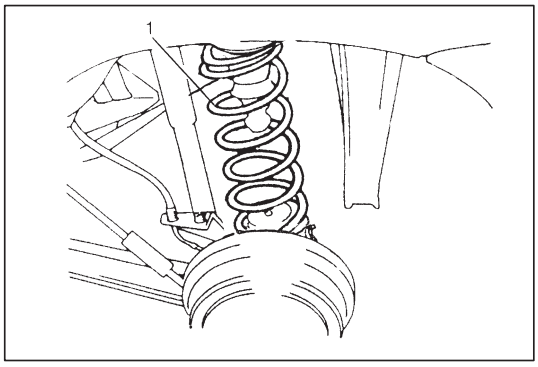

6) Lower rear axle gradually as far down as where coil spring (1) can be removed.

> **CAUTION:**
> **Be careful not to let rear axle down too much.**
> **It may cause damage to brake flexible hose and parking brake cable.**

7) Remove coil spring.

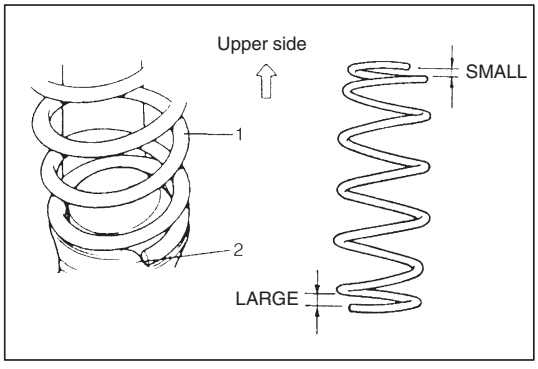

INSTALLATION

1) Install coil spring (1) with its small pitch end facing up and large pitch end down and make sure that spring end comes in contact with stepped part (2) of spring seat as shown in figure.

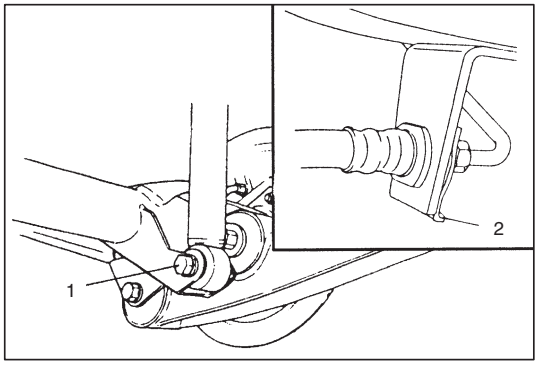

2) Tighten shock absorber lower bolt (1) temporarily by hand.
3) Remove floor jack from rear axle.
4) Install brake flexible hose E-ring (2).

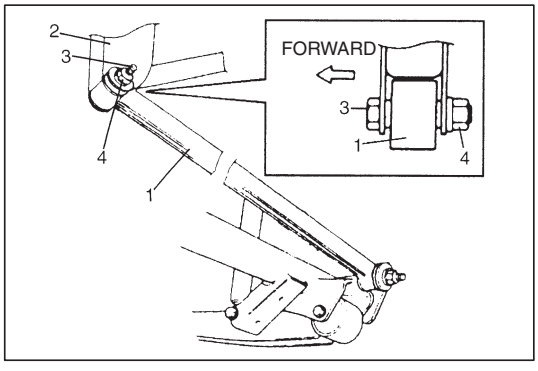

5) Install lateral rod (1) to vehicle body (2), referring to figure for proper installing direction of bolt (3).
Tighten nut (4) temporarily by hand.

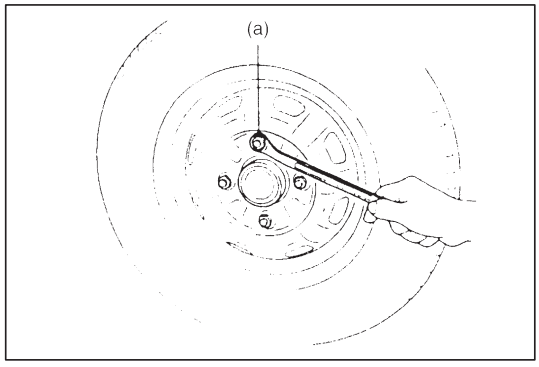

6) Install wheel and tighten wheel nuts to specified torque.

Tightening Torque
(a): 85 N·m (8.5 kg-m, 61.5 lb-ft)

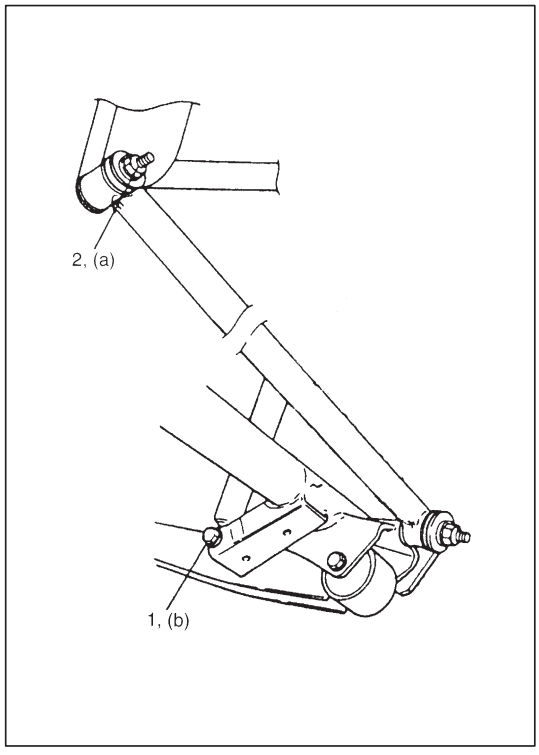

7) Lower hoist and vehicle in non-loaded condition, tighten absorber lower bolt (1) and lateral rod body side nut (2) to specified torque.

Tightening Torque
(a): 90 N·m (9.0 kg-m, 65.0 lb-ft)
(b): 63 N·m (6.3 kg-m, 45.5 lb-ft)

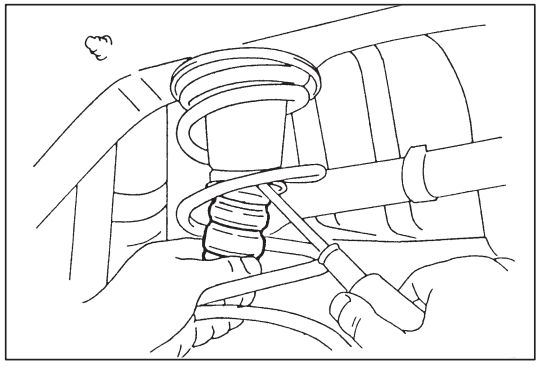

BUMP STOPPER

REMOVAL

1) Hoist vehicle and remove rear wheel.
2) Remove bump stopper using flat tip screwdriver.

INSTALLATION

1) Install bump stopper.

NOTE:
Before installing bump stopper apply soap water on it.

2) Install wheel and tighten wheel nuts to specified torque.

Tightening Torque
85 N·m (8.5 kg-m, 61.5 lb-ft)

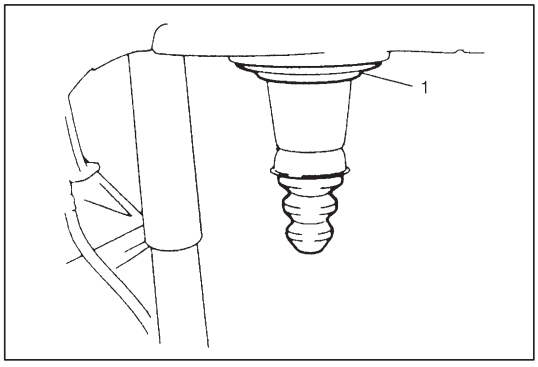

SPRING UPPER SEAT

REMOVAL

1) Remove coil spring. For details, refer to COIL SPRING REMOVAL in this section.
2) Remove spring upper seat (1).

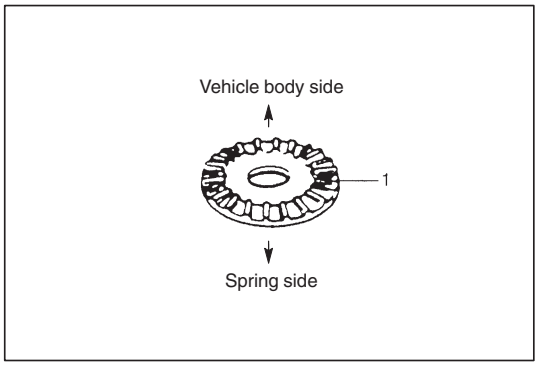

INSTALLATION

1) Install spring upper seat (1).

   NOTE:
   For proper installing direction of spring upper seat, refer to figure at left.

2) Install coil spring. For details, refer to COIL SPRING INSTALLATION in this section.

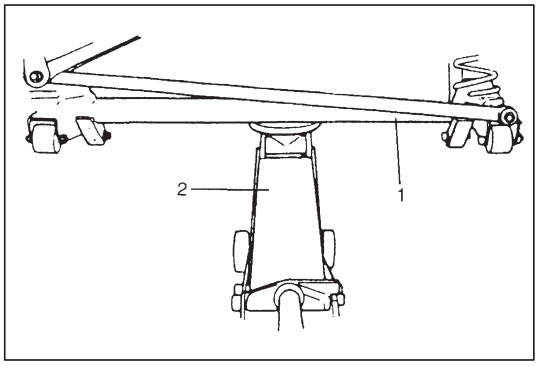

TRAILING ARM

REMOVAL

1) Hoist vehicle and remove rear wheel.
2) Support rear axle (1) by using floor jack (2).

> **CAUTION:**
> **Never apply floor jack against lateral rod as it may get deformed.**

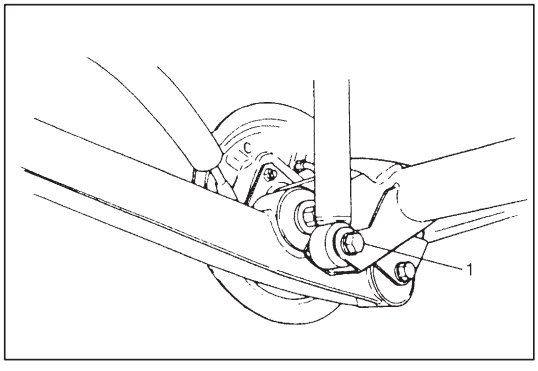

3) Remove shock absorber lower bolt (1).

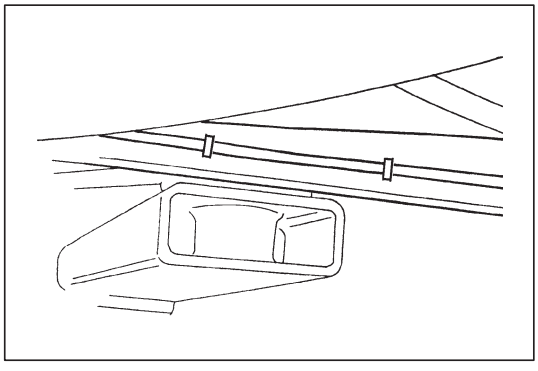

4) For ABS equipped vehicle, disconnect wheel speed sensor lead wire clamp from trailing arm.

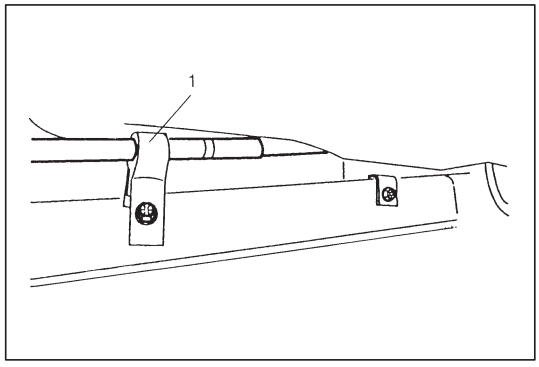

5) Remove parking brake cable clamp (1).

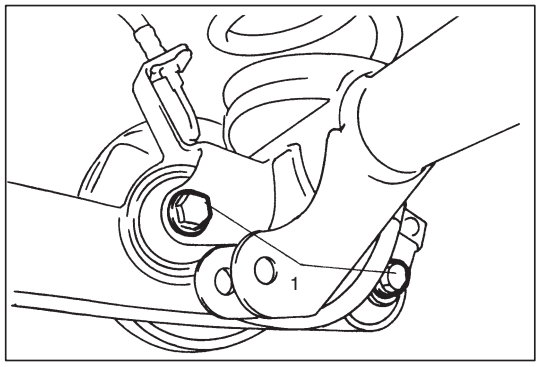

6) Remove trailing arm rear bolts (1).

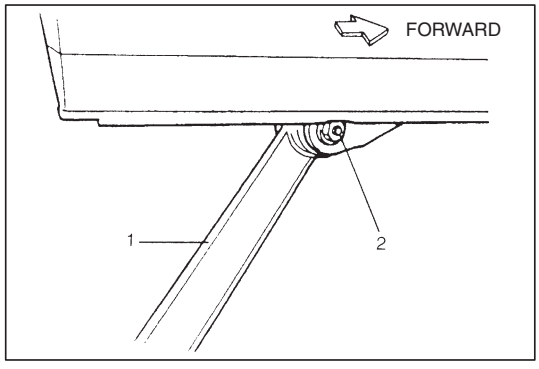

7) Remove trailing arm front bolt (2) and then remove trailing arm (1).

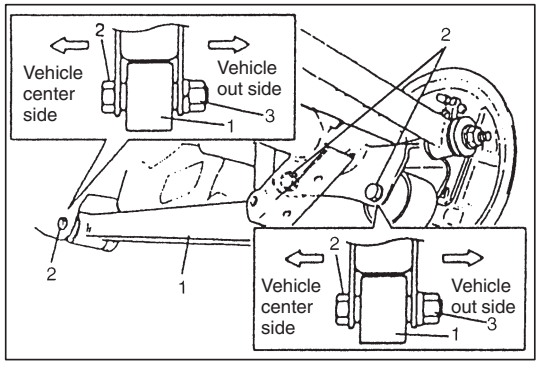

INSTALLATION

1) Install trailing arm (1) to vehicle body and rear axle, referring to figure for proper installing direction of bolts (2) and then tighten nuts (3) temporarily by hand.

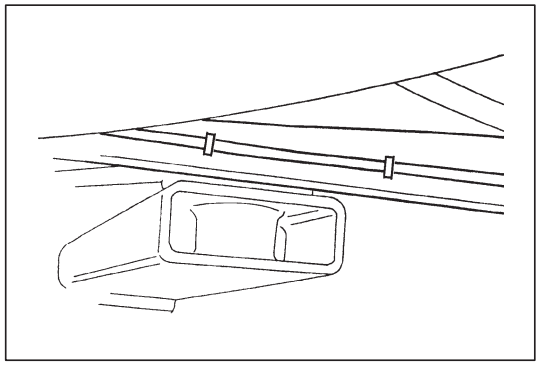

2) Install wheel speed sensor lead wire clamp, if equipped.

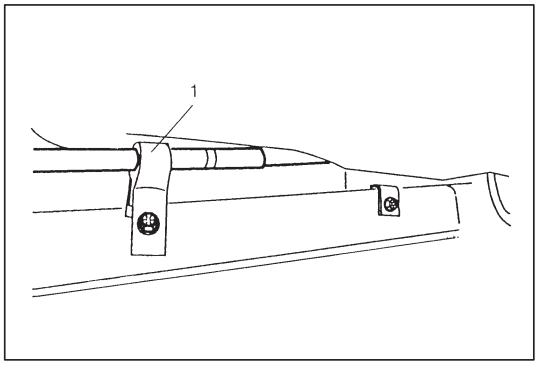

3) Install parking brake cable clamp (1).

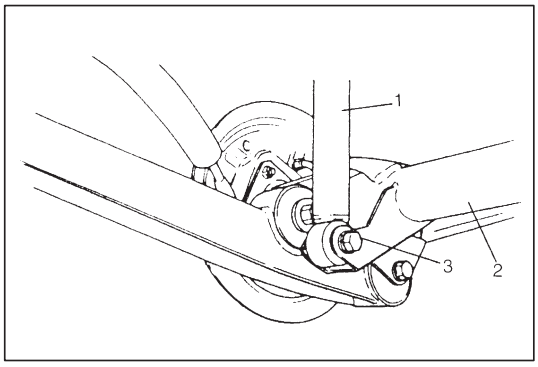

4) Install shock absorber (1) to rear axle (2).
5) Tighten shock absorber lower bolt (3) temporarily by hand.
6) Remove floor jack from rear axle.

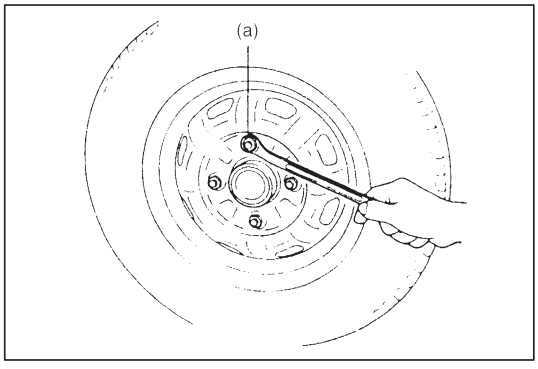

7) Install wheel and tighten wheel nuts to specified torque.

Tightening Torque for wheel nuts
(a): 85 N·m (8.5 kg-m, 61.5 lb-ft)

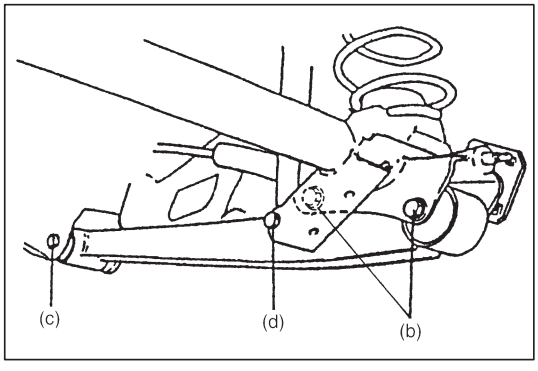

8) Lower hoist and vehicle in non loaded condition, tighten trailing arm front and rear nuts and shock absorber lower bolt to specified torque.

Tightening Torque
(b): 80 N·m (8.0 kg-m, 58.0 lb-ft)
(c): 90 N·m (9.0 kg-m, 65.0 lb-ft)
(d): 63 N·m (6.3 kg-m, 45.5 lb-ft)

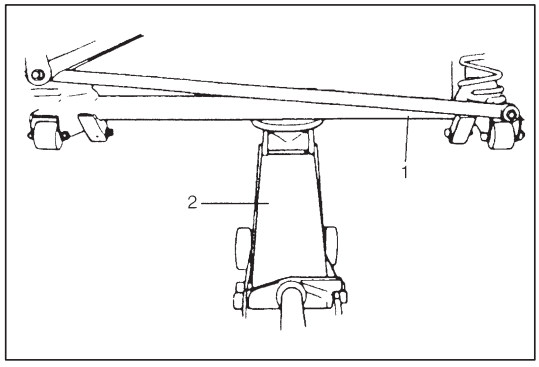

REAR AXLE

REMOVAL

1) Hoist vehicle and remove rear wheels (right & left).
2) Support rear axle (1) by using floor jack (2).
3) Remove rear brake drums (right & left). For details, refer to steps 2) to 6) of BRAKE DRUM REMOVAL in SECTION 5C.

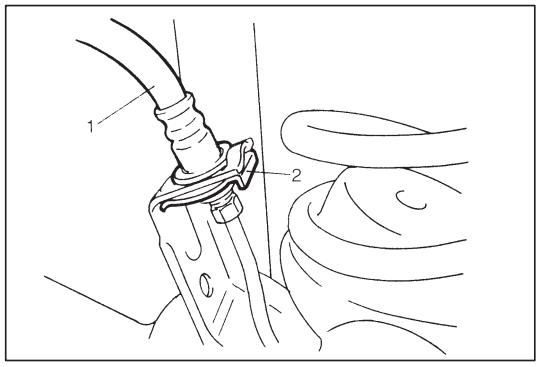

4) Remove E-rings (2) (right & left) securing brake hose (1).

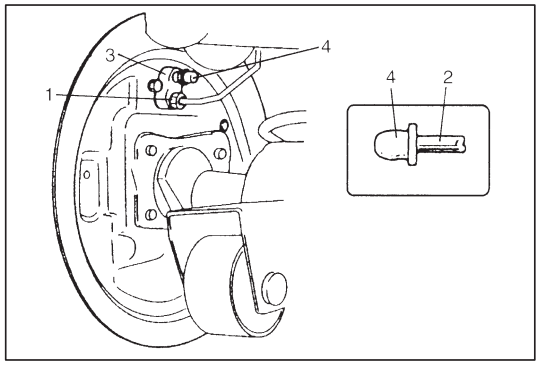

5) Disconnect brake pipe flare nuts (1) from wheel cylinders (3) (right & left) and put bleeder plug cap (4) onto pipe (2) to prevent fluid from spilling.

CAUTION:
Do not allow brake fluid to get on painted surfaces.

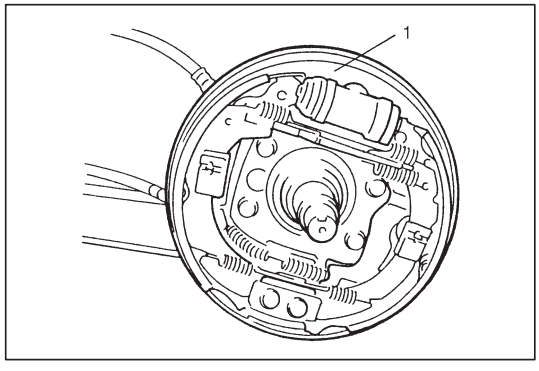

6) Remove brake back plates (1) (right & left) from rear axle and hang removed brake back plate with a wire hook.

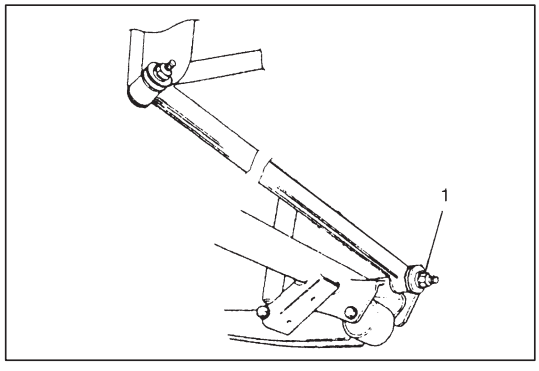

7) Remove lateral rod axle side nut (1).

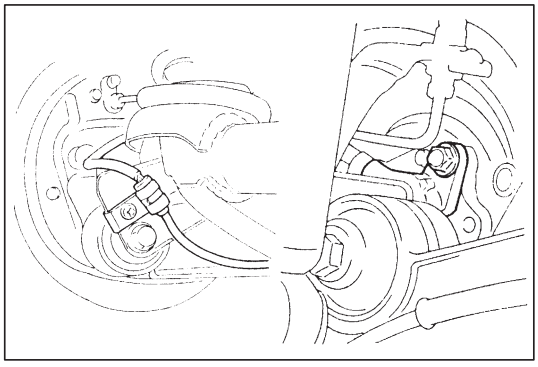

8) Disconnect wheel speed sensor and lead wire clamps (right & left) (if equipped).

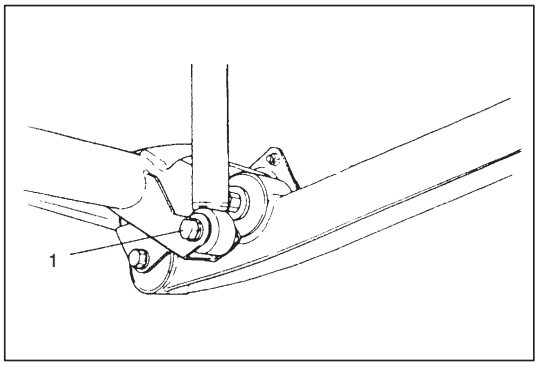

9) Remove shock absorber lower bolts (1) (right & left).

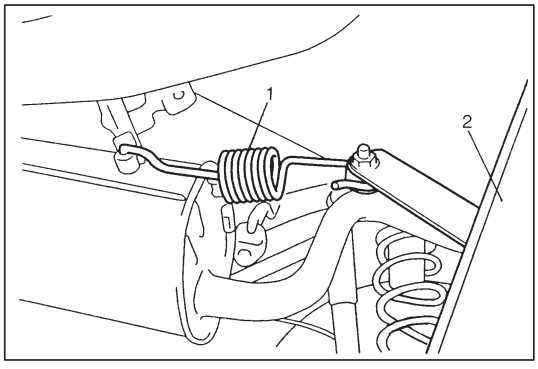

10) Remove LSPV spring (1) from rear axle (2) (if equipped).

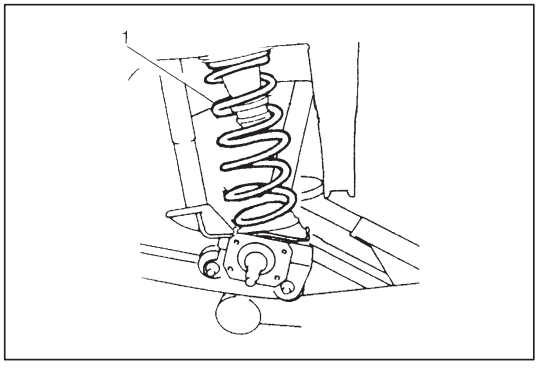

11) Lower rear axle gradually as far down as where coil springs (1) (right & left) can be removed.

> **CAUTION:**
> **Be careful not to let rear axle down too much.**
> **It may cause damage to brake flexible hose and parking brake cable.**

12) Remove coil springs (right & left).

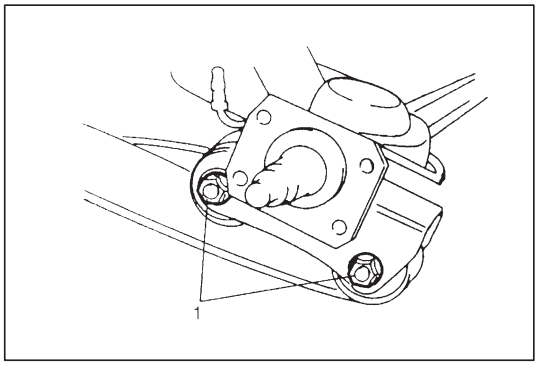

13) Loosen trailing arm rear side nuts (1) but don't remove bolts (right & left).

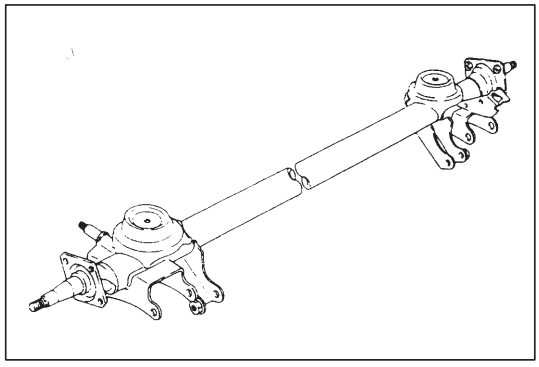

14) While supporting rear axle at both ends (right & left), remove trailing arm rear side bolts and then remove rear axle from chassis by lowering floor jack gradually.

INSTALLATION

Install removed parts in reverse order of removal, noting the following points.

1) Place rear axle on floor jack. Then install lateral rod to rear axle and tighten nut temporarily by hand.

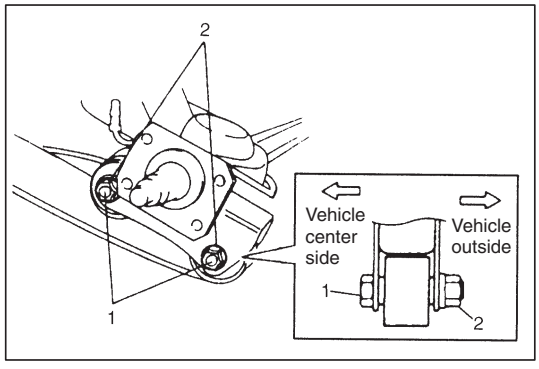

2) Install trailing arm rear bolts (1) (right & left) in proper direction as shown in figure. Then tighten nuts (2) temporarily by hand.

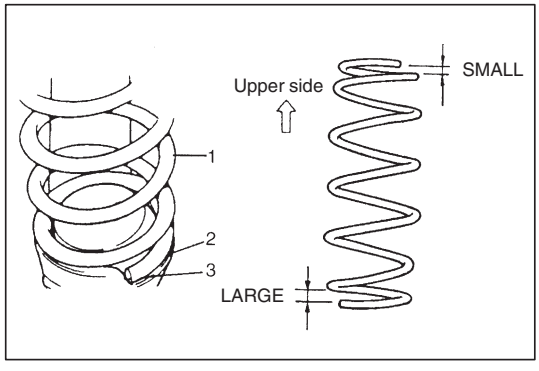

3) Install coil springs (1) (right & left) on spring seat (2) of rear axle as shown in figure and then raise rear axle.

NOTE:
When seating coil spring (1), mate spring end with stepped part (3) of rear axle spring seat as shown.

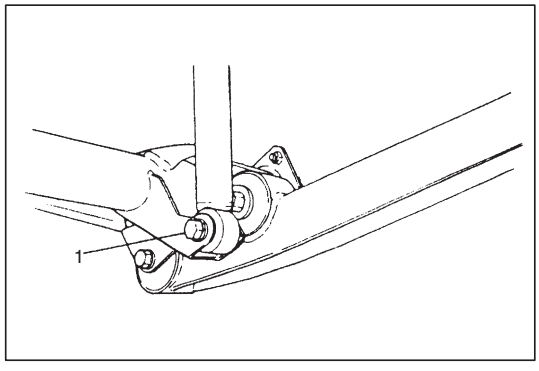

4) Tighten shock absorber lower bolts (1) (right & left) temporarily by hand.
5) Remove floor jack from rear axle.

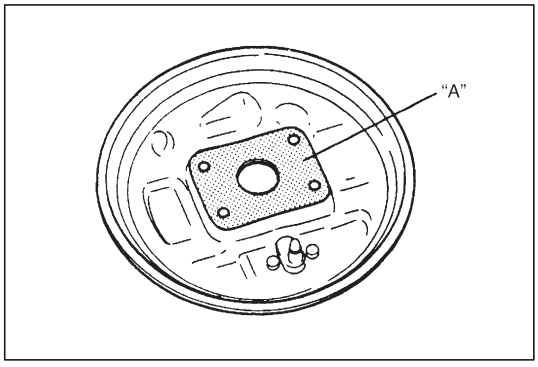

6) Clean mating surface of rear axle (right & left) with brake back plate and apply water tight sealant as shown in figure.

"A": Sealant 99000-31090

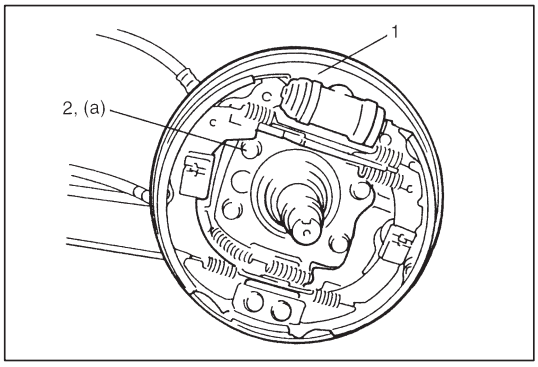

7) Install brake back plates (1) and tighten back plate bolts (2) to specified torque.

Tightening Torque
(a): 23 N·m (2.3 kg-m, 16.5 lb-ft)

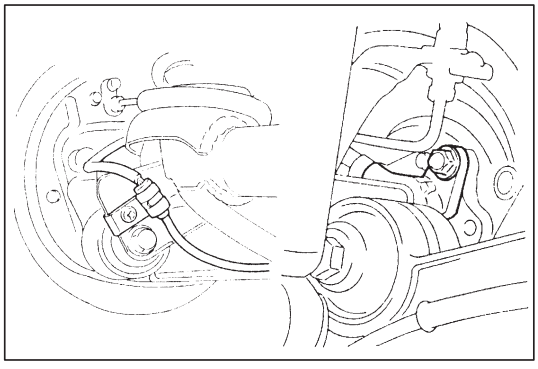

8) Connect wheel speed sensor and lead wire clamps (right & left) (if equipped).

> **CAUTION:**
> **Since there are two holes on each side of rear axle, be sure to install wheel speed sensor at the position as shown in figure.**

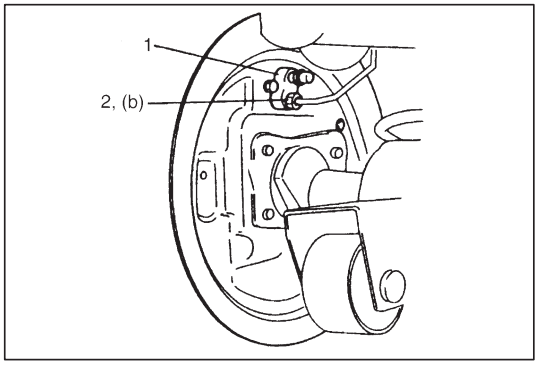

9) Connect brake pipes to wheel cylinders (1) (right & left) and tighten brake pipe flare nuts (2) to specified torque.

Tightening Torque
(b): 16 N·m (1.6 kg-m, 11.5 lb-ft)

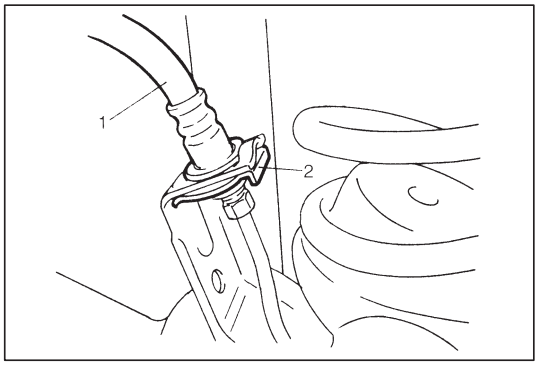

10) Connect brake flexible hoses (1) (right & left) to bracket on rear axle and secure it with E-rings (2) (right & left).

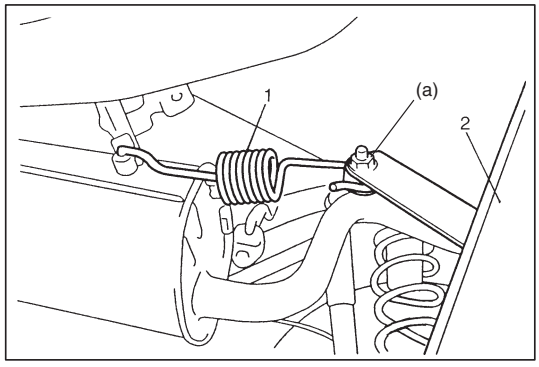

11) Install LSPV spring (1) to rear axle (2) (if equipped).

Tightening Torque
(a): 26 N·m (2.6 kg-m, 19.0 lb-ft)

12) Install brake drums (right & left). For details, refer to steps 3) to 8) of BRAKE DRUM INSTALLATION in Section 5C.
13) Fill reservoir with brake fluid and bleed brake system. (For bleeding operation, see SECTION 5.)

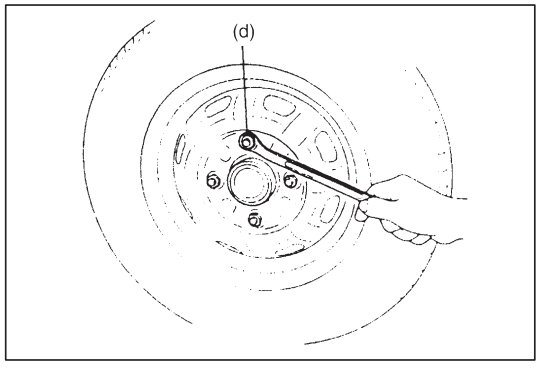

14) Install wheel and tighten wheel nuts to specified torque.

Tightening Torque
(d): 85 N·m (8.5 kg-m, 61.5 lb-ft)

15) Upon completion of all jobs, depress brake pedal with about 30 kg (66 lbs) load three to five times so as to obtain proper drum-to-shoe clearance.
Adjust parking brake cable. (for adjustment, see SECTION 5.)
16) Install console box.
17) Lower hoist and bounce vehicle up and down several times to stabilize suspension.

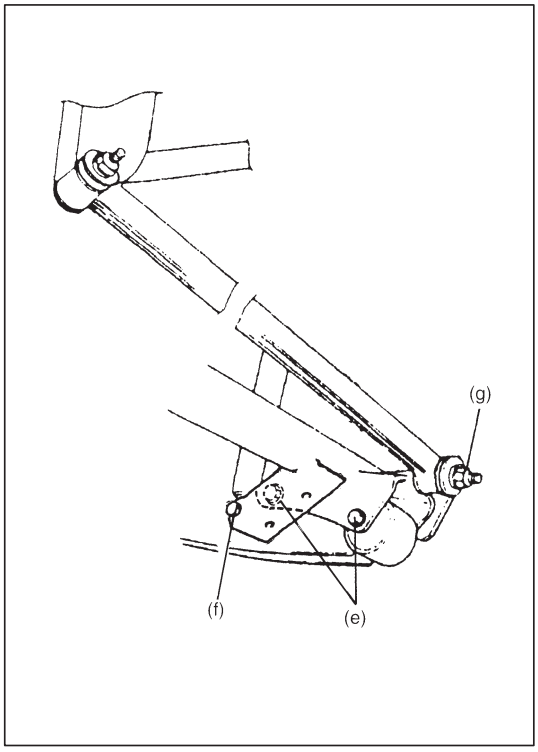

18) Tighten right and left trailing arm rear nuts, shock absorber lower bolts and lateral rod rear axle side nut to specified torque.

NOTE:
When tightening these nuts and bolts, be sure that vehicle is off hoist and in non loaded condition.

Tightening Torque
(e): 80 N·m (8.0 kg-m, 58.0 lb-ft)
(f): 63 N·m (6.3 kg-m, 45.5 lb-ft)
(g): 50 N·m (5.0 kg-m, 36.5 lb-ft)

19) Check to ensure that brake drum is free from dragging and proper braking is obtained.
20) Perform brake test (foot brake and parking brake).

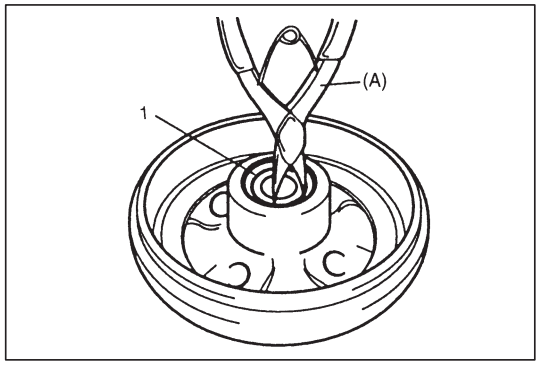

WHEEL BEARING AND WHEEL STUD

REMOVAL

1) Remove rear brake drum, referring to REAR BRAKE DRUM REMOVAL in SECTION 5C.
2) Remove circlip (1).

Special Tool
(A): 09900-06108

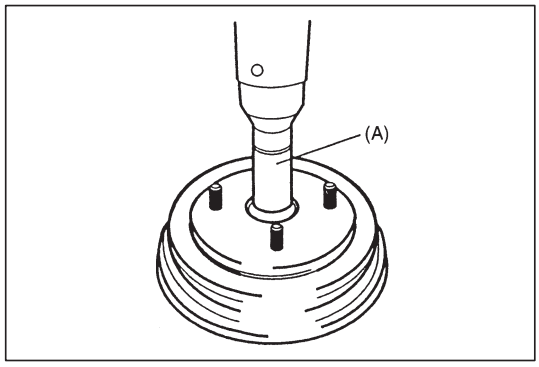

3) Remove wheel bearing by using special tool and hydraulic press.

Special Tool
(A): 09913-76010

> **CAUTION:**
> **Never reuse wheel bearing.**
> **Reused bearing should have excessive play.**

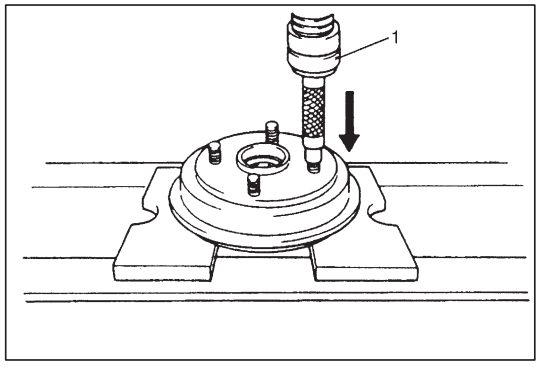

4) Remove wheel stud bolt by using hydraulic press (1).

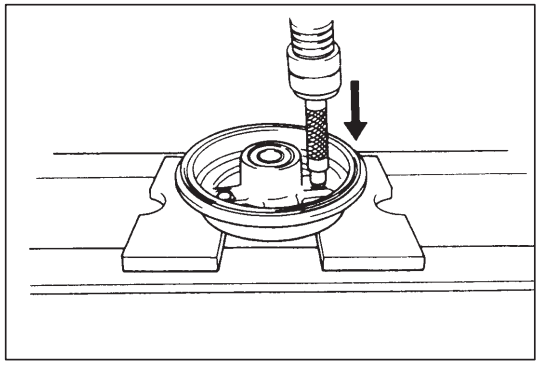

INSTALLATION

1) Insert new stud in drum hole and rotate it slowly to assure serrations are aligned with those made by replaced bolt.

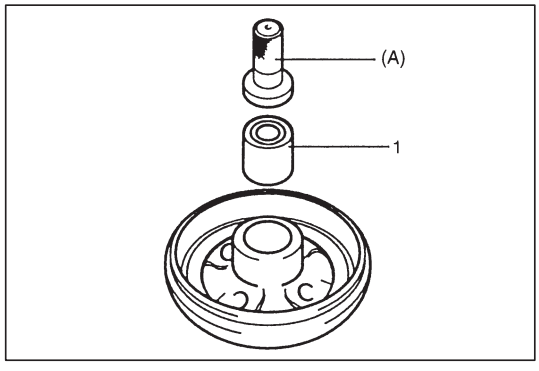

2) Install new wheel bearing (1) by using special tool and hydraulic press.

NOTE:
Seal side of bearing comes inside of brake drum.

Special Tool
(A): 09913-75810

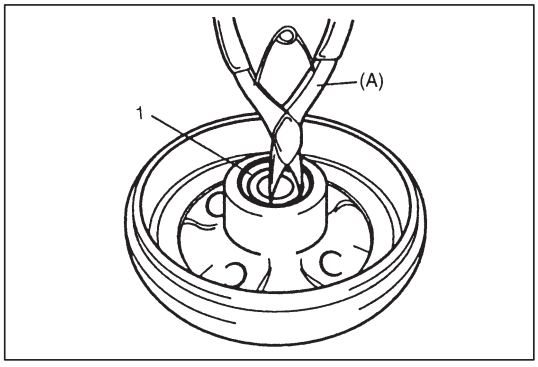

3) Install circlip (1).

Special Tool
(A): 09900-06108

4) Install brake drum and wheel, referring to BRAKE DRUM INSTALLATION in SECTION 5C.

REQUIRED SERVICE MATERIALS

MATERIALS	RECOMMENDED SUZUKI PRODUCT	USE
Brake fluid	DOT4	Brake reservoir tank
Water tight sealant	SEALING COMPOUND 366E (99000-31090)	Join seam of rear axle and brake back plate

SPECIAL TOOLS

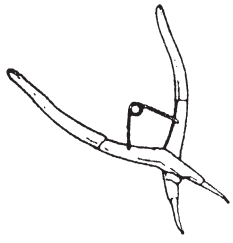 09900-06108 Snap ring pliers	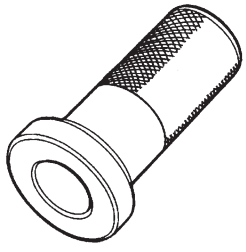 09913-75810 Bearing installer	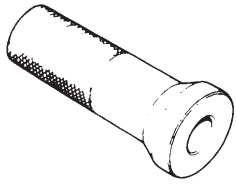 09913-76010 Rear wheel bearing installer	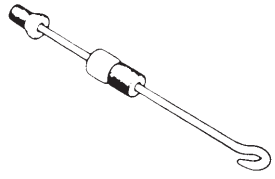 09942-15511 Sliding hammer
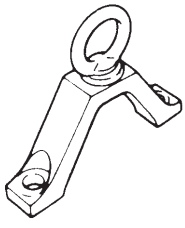 09943-17912 Brake drum remover			

SECTION 3F

WHEELS AND TIRES

NOTE:
All wheel fasteners are important attaching parts in that they could affect the performance of vital parts and systems, and/or could result in major repair expense. They must be replaced with one of the same part number or with an equivalent part if replacement becomes necessary. Do not use a replacement part of lesser quality or substitute design. Torque values must be used as specified during reassembly to assure proper retention of all parts.
There is to be no welding as it may result in extensive damage and weakening of the metal.

CONTENTS

GENERAL DESCRIPTION

TIRES

This vehicle is equipped with the following tire.
165/60R14 or 155/65R14
The tire is of tubeless type. The tire is designed to operate satisfactorily with loads up to the full rated load capacity when inflated to the recommended inflation pressures.
Correct tire pressures and driving habits have an important influence on tire life. Heavy cornering, excessively rapid acceleration, and unnecessary sharp braking increase tire wear.

WHEELS

Standard equipment wheels are the following steel wheel.
14 × 4 1/2 J

REPLACEMENT TIRES

When replacement is necessary, the original equipment type tire should be used. Refer to the Tire Placard. Replacement tires should be of the same size, load range and construction as those originally on the vehicle. Use of any other size or type tire may affect ride, handling, speedometer/odometer calibration, vehicle ground clearance and tire or snow chain clearance to the body and chassis.

kPa	kgf/cm^2	psi
160	1.6	23
180	1.8	26
200	2.0	29
220	2.2	32
240	2.4	35
260	2.6	38
280	2.8	41
300	3.0	44

WARNING:
Do not mix different types of tires on the same vehicle such as radial, bias and bias-belted tires except in emergencies, because handling may be seriously affected and may result in loss of control.

It is recommended that new tires be installed in pairs on the same axle. If necessary to replace only one tire, it should be paired with the tire having the most tread, to equalize braking traction.
The metric term for tire inflation pressure is the kilopascal (kPa). Tire pressures is usually printed in both kPa and psi on the Tire Placard.
Metric tire gauges are available from tool suppliers.
The chart, shown left table, converts commonly used inflation pressures from kPa to psi.

REPLACEMENT WHEELS

Wheels must be replaced if they are bent, dented, have excessive lateral or radial runout, air leak through welds, have elongated bolt holes, if lug nuts won't stay tight, or if they are heavily rusted. Wheels with greater runout than shown in figure below may cause objectionable vibrations.
Replacement wheels must be equivalent to the original equipment wheels in load capacity, diameter, rim with offset and mounting configuration. A wheel of improper size or type may affect wheel and bearing life, brake cooling, speedometer/odometer calibration, vehicle ground clearance and tire clearance to body and chassis.

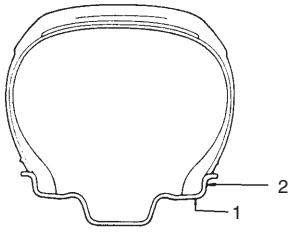

*** TOTAL INDICATOR READING IGNORE INDICATOR "JUMP" DUE TO WELD SEAMS, PAINT RUNS, SCRATCHES, ETC.**

1. Radial runout
2. Lateral runout

HOW TO MEASURE WHEEL RUNOUT

To measure the wheel runout, it is necessary to use an accurate dial indicator. The tire may be on or off the wheel. The wheel should be installed to the wheel balancer of the like for proper measurement. Take measurements of both lateral runout and radial runout at both inside and outside of the rim flange. With the dial indicator set in place securely, turn the wheel one full revolution slowly and record every reading of the indicator.

When the measured runout exceeds the specification and correction by the balancer adjustment is impossible, replace the wheel. If the reading is affected by welding, paint or scratch, it should be ignored.

	Radial runout limit	Lateral runout limit
Steel wheel	2.0 mm (0.078 in.)	2.0 mm (0.078 in.)

MAINTENANCE AND MINOR ADJUSTMENTS

WHEEL MAINTENANCE

Wheel repairs that use welding, heating, or peening are not approved. All damaged wheels should be replaced.

WHEEL ATTACHING STUDS

If a broken stud is found, see Section 3E (rear) or Section 3D (front) for Note and Replacement procedure.

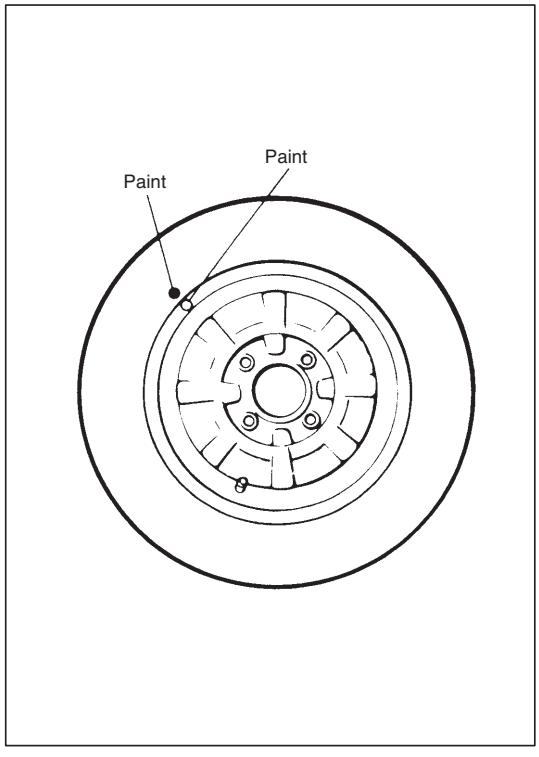

MATCHED TIRES AND WHEELS

Tires and wheels are matchmounted at the assembly plant.
This means that the radially stiffest part of the tire, or “high spot”, is matched to the smallest radius or ”low spot” of the wheel.
This is done to provide the smoothest possible ride.
The “high spot” of the tire is originally marked by paint dot on the outboard sidewall. This paint dot will eventually be washed off the tire.
The “low spot” of the wheel is originally marked by paint dot on the wheel rim-flange. Properly assembled, the wheel rims’ paint dot should be aligned with the tires’ paint dot as shown in left figure.
Whenever a tire is dismounted from its wheel, it should be remounted so that the tire and wheel are matched. If the tire’s paint dot cannot be located, a line should be scribed on the tire and wheel before dismounting to assure that it is remounted in the same position.

INFLATION OF TIRES

The pressure recommended for any model is carefully calculated to give a satisfactory ride, stability, steering, tread wear, tire life and resistance to bruises.
Tire pressure, with tires cold, (after vehicle has set for three hours or more, or driven less than one mile) should be checked monthly or before any extended trip. Set to the specifications on the tire placard located on the left door (right door for right-hand side steering vehicle) lock pillar.
It is normal for tire pressure to increase when the tires become hot during driving.
Do not bleed or reduce tire pressure after driving. Bleeding reduces the “Cold Inflation Pressure”.

Higher than recommended pressure can cause:
1. Hard ride
2. Tire bruising or carcass damage
3. Rapid tread wear at center of tire

Unequal pressure on same axle can cause:
1. Uneven braking
2. Steering lead
3. Reduced handling
4. Swerve on acceleration

Lower than recommended pressure can cause:
1. Tire squeal on turns
2. Hard Steering
3. Rapid and uneven wear on the edges of the tread
4. Tire rim bruises and rupture
5. Tire cord breakage
6. High tire temperature
7. Reduced handling
8. High fuel consumption

Valve caps should be on the valves to keep dust and water out.

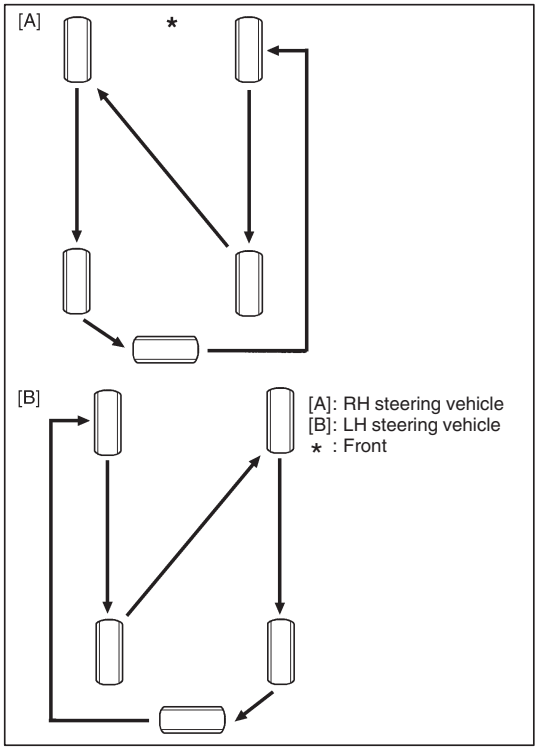

TIRE PLACARD

The tire placard is located on the left door (right door for right-hand side steering vehicle) lock pillar and should be referred to for tire information.
The placard lists the maximum load, tire size and cold tire pressure where applicable.

NOTE:
Whether rim size and/or maximum load are listed or not depends on regulations of each country.

TIRE ROTATION

To equalize wear, rotate tires according to left figure. Radial tires should be rotated periodically. Set tire pressure.

NOTE:
Due to their design, radial tires tend to wear faster in the shoulder area, particularly in front positions. This makes regular rotation especially necessary.

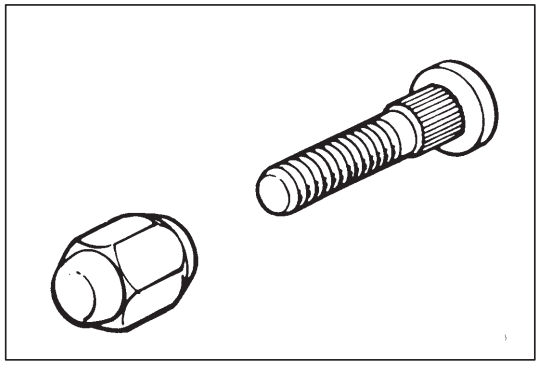

ON-VEHICLE SERVICE

SERVICE OPERATIONS

METRIC LUG NUTS AND WHEEL STUDS

All models use metric lug nuts and wheel studs (size: M12 x 1.25).

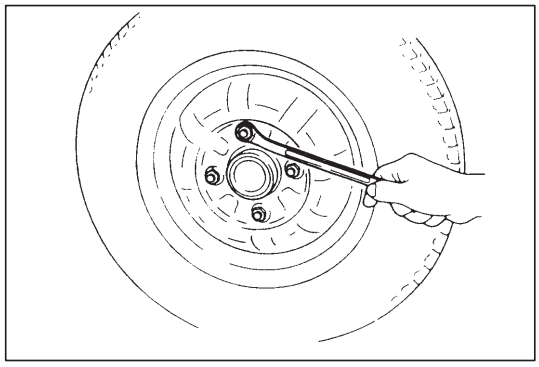

WHEEL REMOVAL

1) Loosen wheel nuts by approximately 180° (half a rotation).
2) Hoist vehicle.
3) Remove wheel.

CAUTION:
Never use heat to loosen tight wheel because application of heat to wheel can shorten life of wheel and damage wheel bearings.

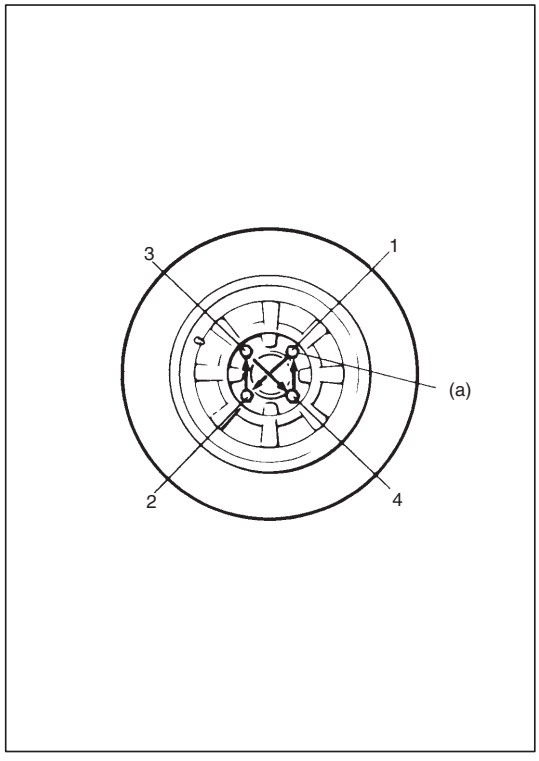

Wheel nuts must be tightened in sequence and to proper torque to avoid bending wheel or brake disc, left figure.

NOTE:
Before installing wheels, remove any build-up of corrosion on wheel mounting surface and brake disc mounting surface by scraping and wire brushing. Installing wheels without good metal-to-metal contact at mounting surfaces can cause wheel nuts to loosen, which can later allow a wheel to come off while vehicle is moving.

Tightening Torque
(a): 85 N·m (8.5 kg-m, 61.5 lb-ft)

TIRE MOUNTING AND DISMOUNTING

Use a tire changing machine to mount or dismount tires. Follow equipment manufacturer's instructions. Do not use hand tools or tire irons alone to change tires as they may damage tire beads or wheel rim.

Rim bead seats should be cleaned with a wire brush or coarse steel wool to remove lubricants, old rubber and light rust. Before mounting or dismounting a tire, bead area should be well lubricated with approved tire lubricant.

After mounting, inflate to specified pressure shown on tire placard so that beads are completely seated.

WARNING:
Do not stand over tire when inflating. Bead may break when bead snaps over rim's safety hump and cause serious personal injury.
Do not exceed specified pressure when inflating. If specified pressure will not seat beads, deflate, re-lubricate and reinflate.
Over inflation may cause bead to break and cause serious personal injury.

Install valve core and inflate to proper pressure.

TIRE REPAIR

There are many different materials and techniques on the market to repair tires. As not all of these work on all types of tires, tire manufacturers have published detailed instructions on how and when to repair tires. These instructions can be obtained from each tire manufacturer.

BALANCING WHEELS

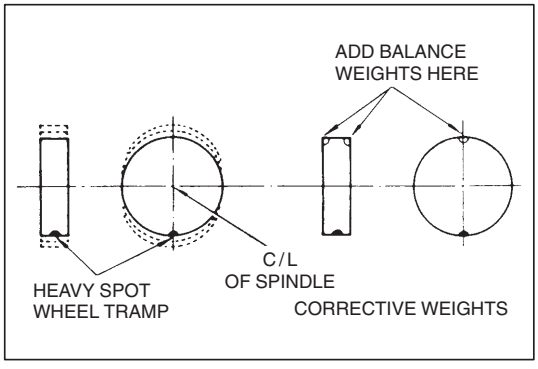

There are two types of wheel and tire balance: static and dynamic. Static balance, as shown in left figure, is the equal distribution of weight around the wheel. Wheels that are statically unbalanced cause a bouncing action called tramp. This condition will eventually cause uneven tire wear.

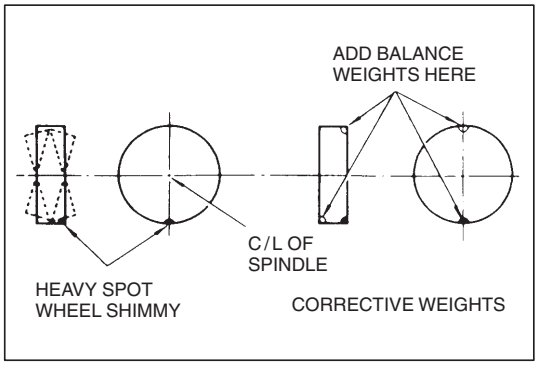

Dynamic balance, as shown in left figure, is the equal distribution of weight on each side of the wheel centerline so that when the tire spins there is no tendency for the assembly to move from side to side. Wheels that are dynamically unbalanced may cause shimmy.

GENERAL BALANCE PROCEDURES

Deposits of mud, etc. must be cleaned from inside of rim.

WARNING:
Stones should be removed from the tread in order to avoid operator injury during spin balancing and to obtain good balance.

Each tire should be inspected for any damage, then balanced according to equipment manufacturer's recommendation.

OFF-VEHICLE BALANCING

Most electronic off-vehicle balancers are more accurate than the on-vehicle spin balancers. They are easy to use and give a dynamic (two plane) balance. Although they do not correct for drum or disc unbalance as does on-vehicle spin blancing, this is overcome by their accuracy, usually to within 1/8 ounce.

ON-VEHICLE BALANCING

On-vehicle balancing methods vary with equipment and tool manufacturers. Be sure to follow each manufacturer's instructions during balancing operation.

WARNING:
Wheel spin should be limited to 35 mph (55 km/h) as indicated on speedometer.
This limit is necessary because speedometer only indicates one-half of actual wheel speed when one drive wheel is spinning and the other drive wheel is stopped.
Unless care is taken in limiting drive wheel spin, spinning wheel can reach excessive speeds. This can result in possible tire disintegration or differential failure, which could cause serious personal injury or extensive vehicle damage.

TIGHTENING TORQUE SPECIFICATIONS

Fastening	Tightening torque		
	N·m	kg-m	lb-ft
Wheel nuts	85	8.5	61.5

SECTION 4

FRONT DRIVE SHAFT

CONTENTS

GENERAL DESCRIPTION

A constant velocity double offset joint (DOJ) is used on the differential side of the left side drive shaft assembly.
A constant velocity tripod joint is used on the differential side or center shaft side of the right side drive shaft assembly.
A constant velocity ball joint is used on the wheel side of both right and left drive shaft assemblies. The drive shaft can slide through the tripod joint or DOJ in the extension/contraction direction.

DIAGNOSIS

Condition	Possible Cause	Correction
Abnormal Noise	● Worn or breakage drive shaft joint ● Worn or breakage center bearing	Replace. Replace.

ON-VEHICLE SERVICE

Removal & Installation

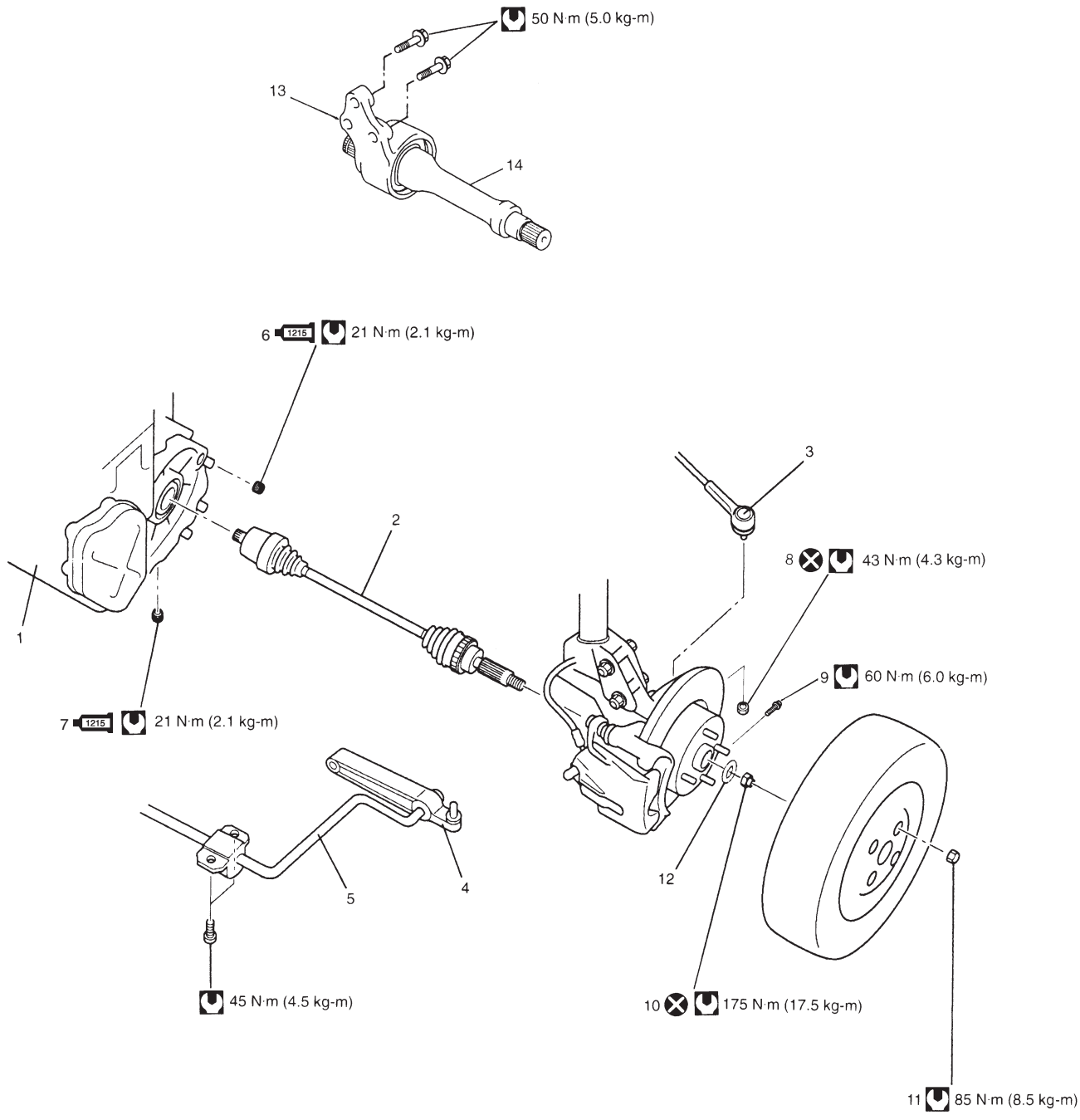

1. Transmission
2. Drive shaft assembly
3. Tie-rod end
4. Suspension control arm
5. Stabilizer
6. Oil filler / level plug: (1215)
   Apply sealant 99000-31110 to plug thread.
7. Oil drain plug: (1215)
   Apply sealant 99000-31110 to plug thread.
8. Tie-rod end nut
9. Ball stud bolt
10. Drive shaft nut
11. Wheel nut
12. Washer
13. Center bearing support
14. Center shaft

: Tightening Torque
: Do not reuse

Disassembly & Reassembly

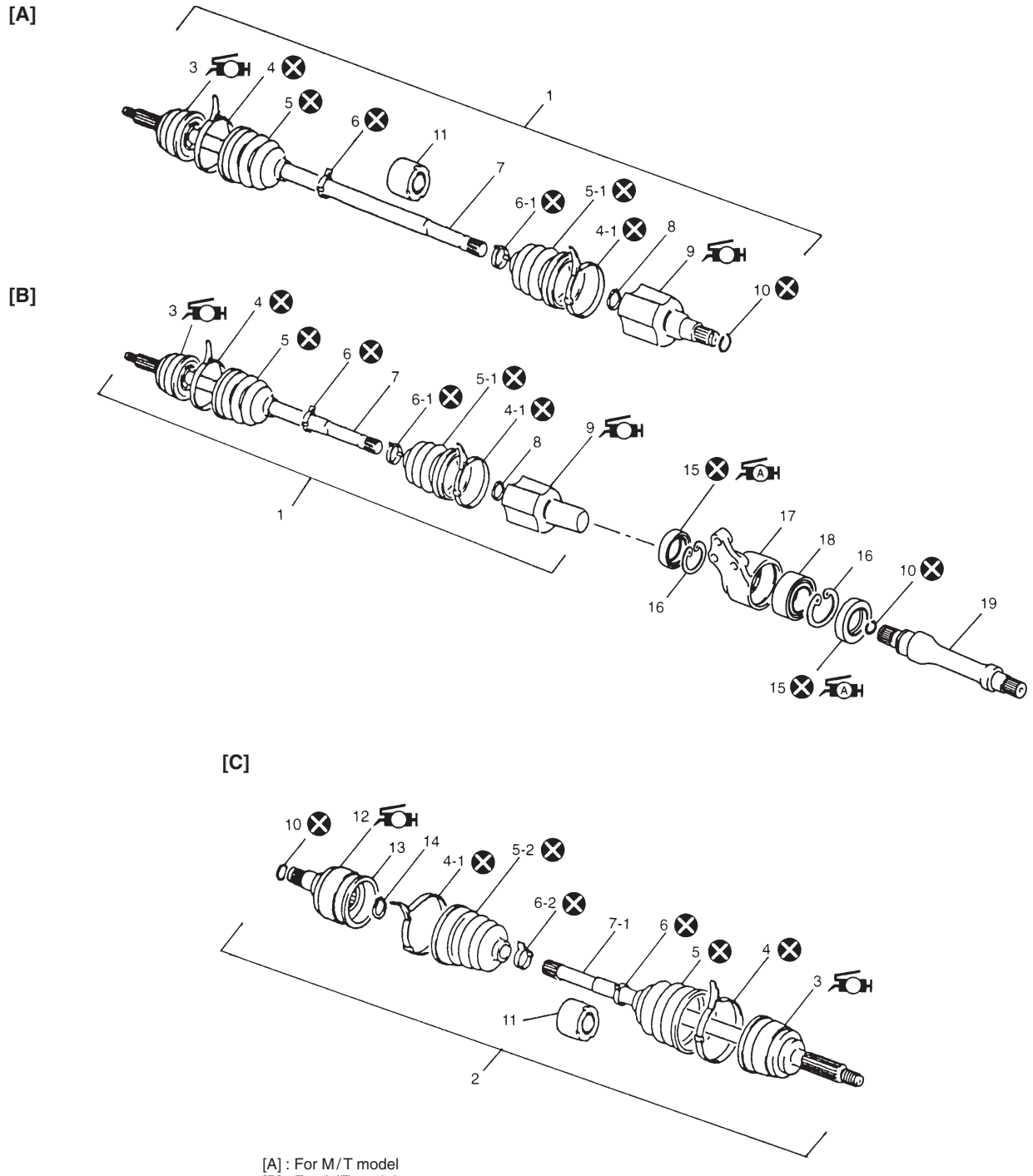

[A] : For M/T model
[B] : For A/T model
[C] : Both models

1. Right side drive shaft assembly
2. Left side drive shaft assembly
3. Wheel side joint (Constant velocity ball joint): Apply HTBJ grease included in spare parts to ball joint.
4. Ball joint boot big band
4-1. Tripod joint & DOJ boot big band
5. Ball joint boot
5-1. Tripod joint boot
5-2. DOJ boot
6. Ball joint boot small band
6-1. Tripod joint boot small band
6-2. DOJ boot small band
7. Drive shaft for tripod
7-1. Drive shaft for DOJ
8. Snap ring
9. Differential (or center shaft) side joint (Constant velocity tripod joint): Apply GKN 1 LUBER C grease included in spare parts to tripod joint.
10. Snap ring
11. Damper (For M/T model only)
12. Differential side joint (Constant velocity DOJ): Apply Thermax grease included in spare parts to DOJ
13. Snap ring
14. Retaining ring
15. Oil seal: Apply grease A 99000-25010 to oil seal lip and bearing side space.
16. Center bearing support circlip
17. Center bearing support
18. Center bearing
19. Center shaft

: Do not reuse

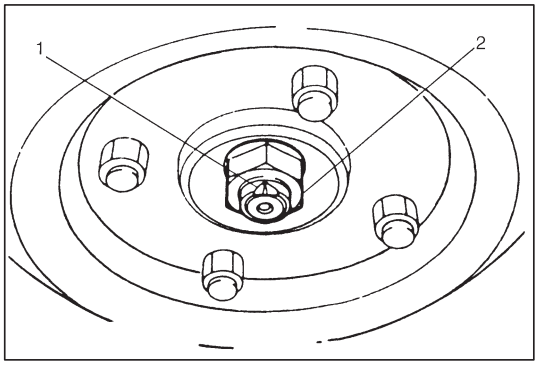

REMOVAL

CAUTION:
To prevent breakage of boots, be careful not to bring them into contact with other parts when removing drive shaft assembly.

1) Undo caulking (1) and remove drive shaft nut (2).
2) Loosen wheel nuts.
3) Hoist vehicle.
4) Remove wheel.
5) Drain transmission oil.

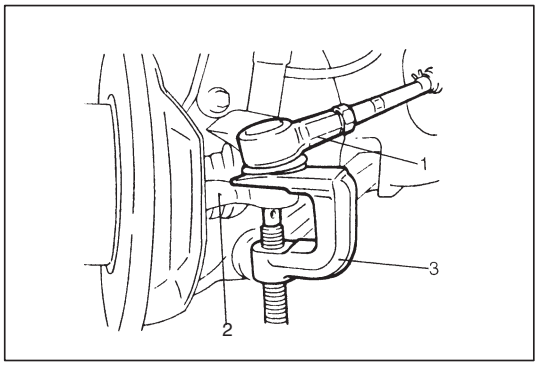

6) Remove tie-rod end nut.
7) Disconnect tie-rod end (1) from steering knuckle (2) by using puller (3).

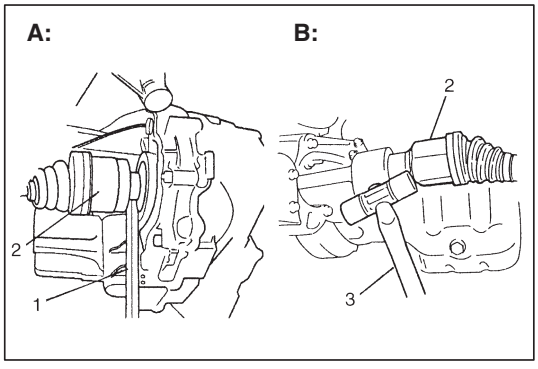

8) A: For vehicle without center shaft
   Using tire lever (1), pull out drive shaft joint (2) so as to release snap ring fitting of joint spline at differential side.

   B: For vehicle with center shaft
   Using plastic hammer (3), drive out drive shaft joint so as to release snap ring fitting of joint spline at center shaft.

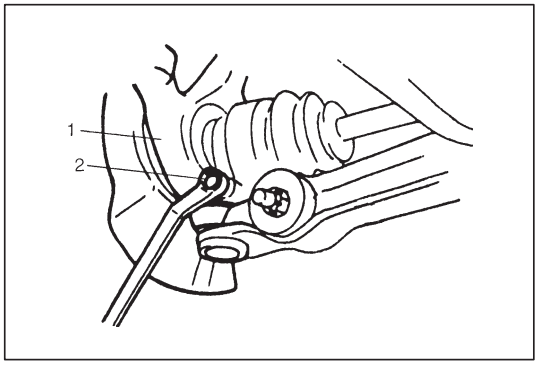

9) Remove two stabilizer mount brackets from vehicle body.
10) Disconnect front suspension control arm ball joint stud from steering knuckle (1) by pushing down stabilizer bar after removing ball joint bolt (2).
11) Remove drive shaft assembly.

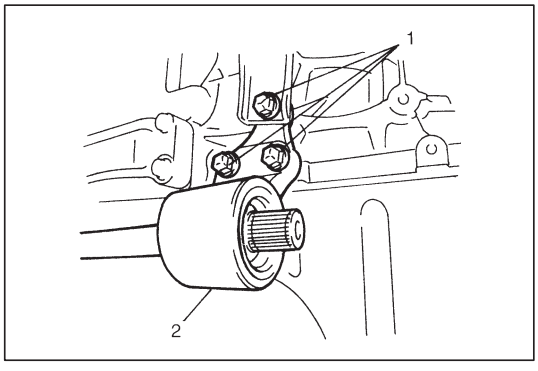

12) For vehicle with center shaft
    Loosen intake manifold rear stiffener upper bolt.
13) For vehicle with center shaft
    Remove center bearing support bolts (1) and remove center bearing support (2) with center shaft from differential side gear.

INSPECTION

- Check boots for breakage or deterioration.
- Check wheel side joint for rattle or smooth movement.
- Check differential side joint or center shaft side joint for smooth movement.
  If malfunction is found, replace.

DISASSEMBLY

For Tripod joint type drive shaft (right side)

CAUTION:
- **Disassembly of wheel side joint is not allowed. If noise or damage exists in it, replace it as assembly.**
- **Do not disassemble tripod joint spider. If any malcondition is found in it, replace it as differential side joint assembly.**

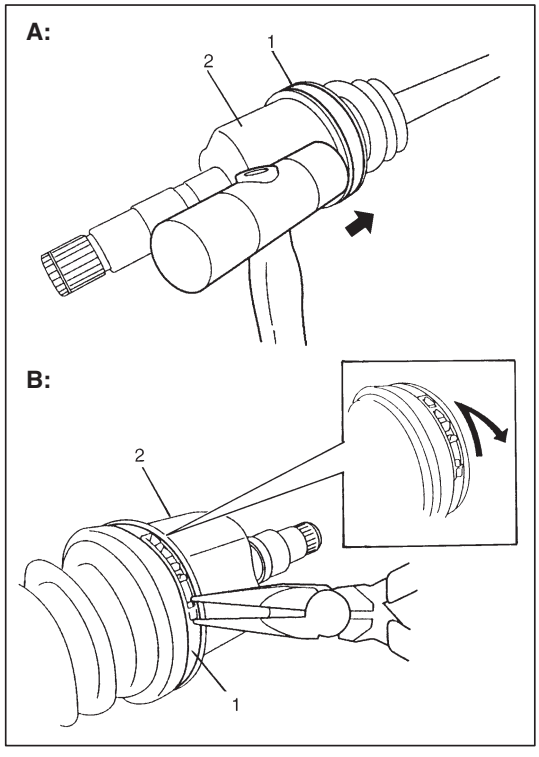

1) Remove differential side boot big band (1) as follows.
   A: For boot big band without joint
      a) Remove boot big band by tapping boot and band with plastic hammer.
         If it is hard to remove boot big band, cut it using a nipper or a iron saw with care not to damage tripod joint housing.

   B: For boot big band with joint
      a) Draw hooks of boot big band together and remove band.

2) Take out tripod joint housing (2).

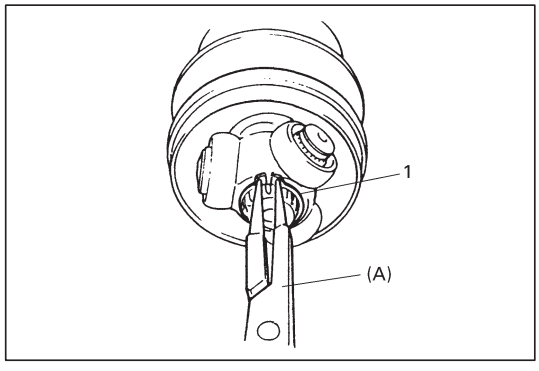

3) Remove grease from shaft and take off snap ring (1) by using special tool.

   Special Tool
   (A): 09900-06107

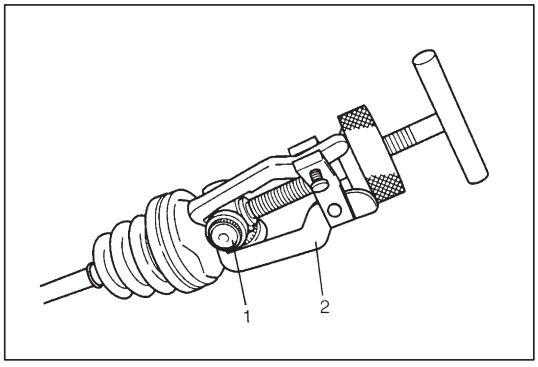

4) Remove spider (1) by using 3 arms puller (2).

> **CAUTION:**
> **To prevent needle bearing of joint from being degreased, do not wash it if it is to be reused.**

5) Remove boot small band, then pull out differential side boot from shaft.
6) Pull out damper through shaft. (For M/T model only)

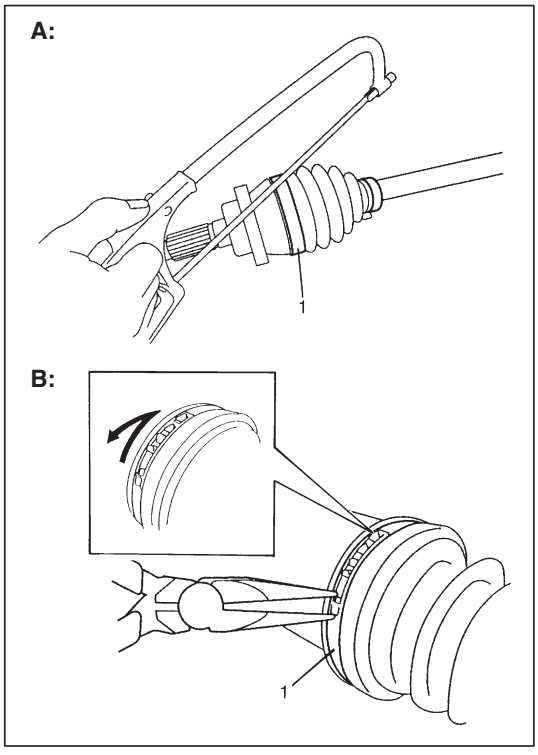

7) Remove wheel side boot big band (1) as follows.
   A: For boot big band without joint
      a) Cut boot big band using a iron saw or a nipper with care not to damage wheel side joint housing.
   B: For boot big band with joint
      a) Draw hooks of boot big band together and remove band.
8) Remove wheel side small band, then pull out wheel side boot from shaft.

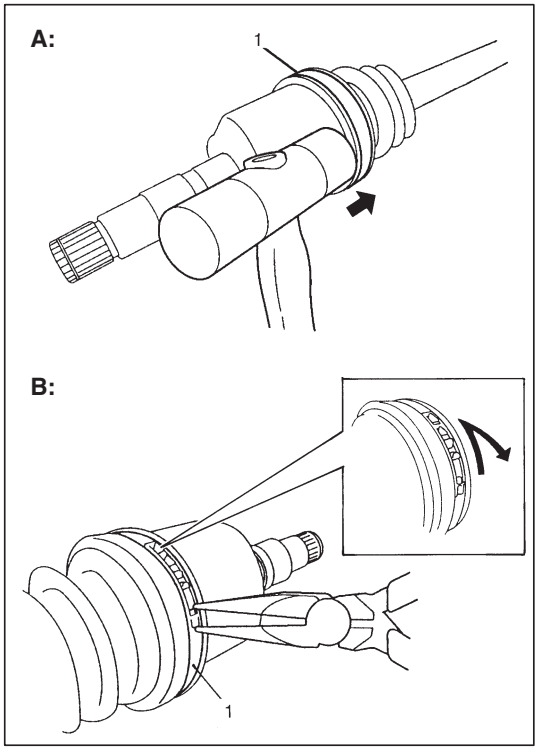

For DOJ type drive shaft (left side)

> **CAUTION:**
> **Disassembly of wheel side joint is not allowed. If noise or damage exists in it, replace it as assembly.**

1) Remove differential side boot big band (1) as follows.
   A: For boot big band without joint
      a) Remove boot big band by tapping boot and band with plastic hammer.
         If it is hard to remove boot big band, cut it using a nipper or a iron saw with care not to damage DOJ housing.
   B: For boot big band with joint
      a) Draw hooks of boot big band together and remove band.

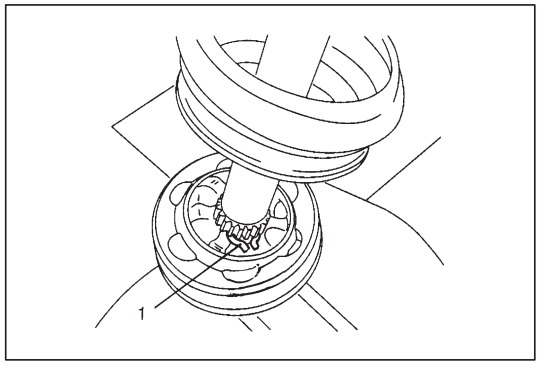

2) Remove DOJ from shaft as follows.
   a) Fold over boot and remove old grease so that retaining ring (1) is accessible.

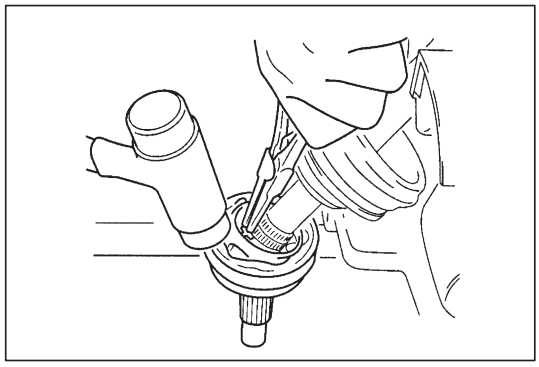

   b) Clamp drive shaft in soft jawed vise.
      Spread retaining ring using snap ring pliers (opening type) and tap DOJ of drive shaft using plastic hammer until retaining ring no longer engages in groove of shaft.

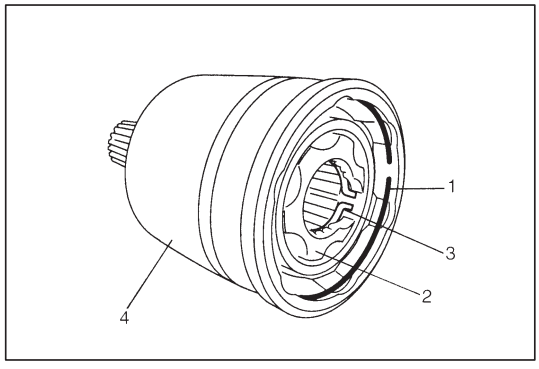

3) Remove snap ring (1) and then remove cage (2) with retaining ring (3) from housing (4) if necessary.
4) Remove differential side boot, damper and wheel side boot from shaft referring to steps 5), 6), 7) and 8) in disassembly for tripod joint type drive shaft.

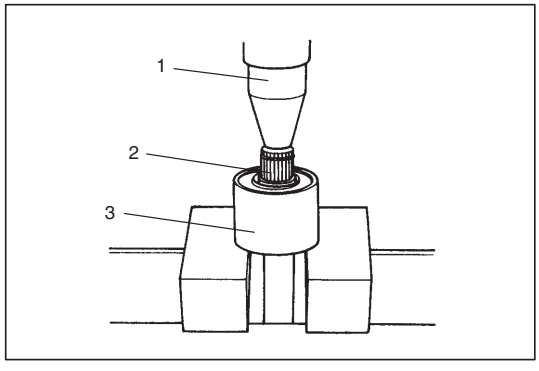

For Center shaft and Center bearing support

1) Using hydraulic press (1), draw out center shaft (2) from center bearing.
2) Remove oil seals from center bearing support (3).

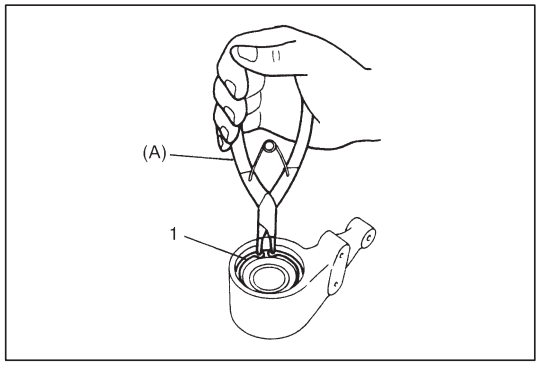

3) Remove bearing support circlips (1).

   Special Tool
   (A): 09900-06108

4) Remove center bearing from center bearing support.

INSPECTION

- Check shaft and joint for damage, wear or bend.
  Replace them as necessary.
- Check retaining ring and snap ring for breakage or deformation.
  Replace as necessary.

ASSEMBLY

For Tripod joint type drive shaft (right side)

1) Wash disassembled parts (except boots and needle bearing of spider). After washing, dry parts completely by blowing air.
2) Clean boots with cloth. DO NOT wash boot in degreaser, such as gasoline or kerosene, etc. Washing in degreaser causes deterioration of boot.

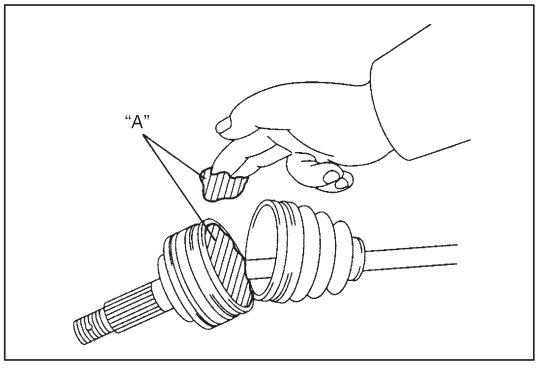

3) Install new wheel side boot on shaft temporarily.
4) Apply grease to wheel side joint. Use grease in tube included in wheel side boot set.

   "A": HTBJ (High Temperature Birfield Joint) grease/ Color: Black

   Grease capacity: About 60 – 80 g (2.1 – 2.8 oz)

5) Fit wheel side boot onto grooves of housing and shaft.

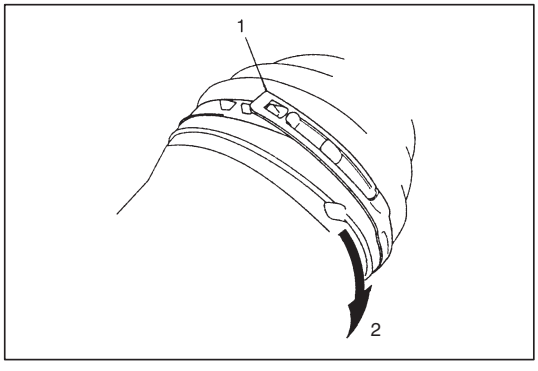

6) Place new wheel side big band onto boot putting band outer end (1) against forward rotation (2) as shown in figure.

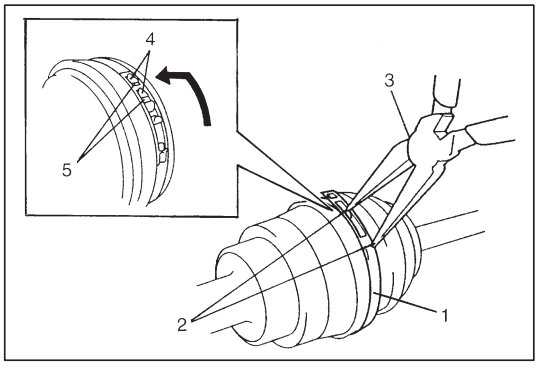

7) Fasten boot big band (1) by drawing hooks (2) with plier (3) and engage hooks (4) in slot and window (5).

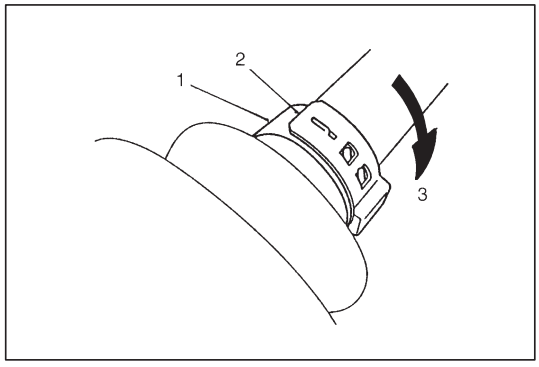

8) Place new wheel side small band (1) onto boot putting band outer end (2) against forward rotation (3) as shown in figure.

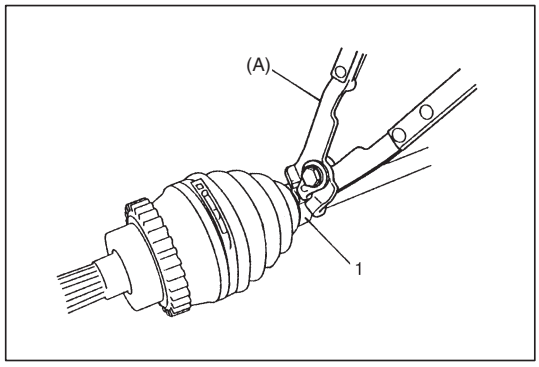

9) Confirm that wheel side boot is not stretched or contracted and fasten boot small band (1) securely at that position.

Special Tool
(A): 09943-55010

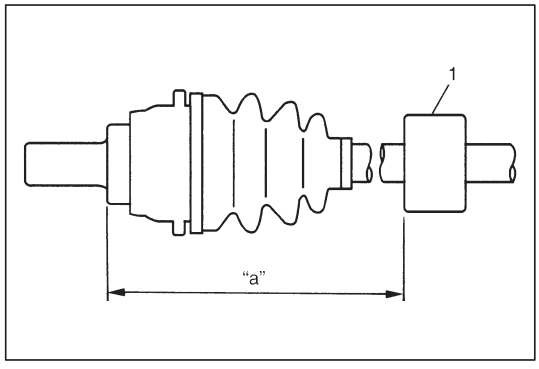

10) Install damper (1) on drive shaft according to dimension specified below. (For M/T model only)

Length "a": 347 – 353 mm (13.7 – 13.9 in.)

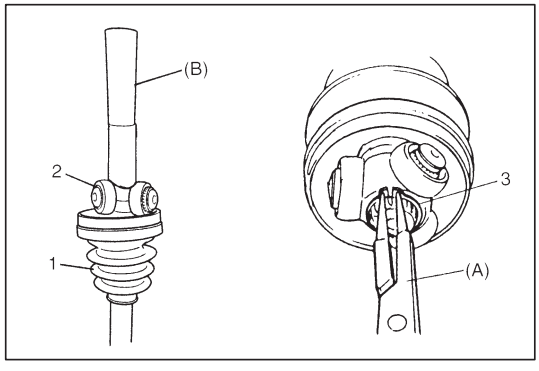

11) Set new differential side small band and differential side boot (1) on shaft temporarily.
12) Install tripod joint spider (2) on shaft by using special tool with hammer, facing its chamfered spline inward (wheel side), then fasten it with snap ring (3).

Special Tool
(A): 09900-06107
(B): 09925-98221

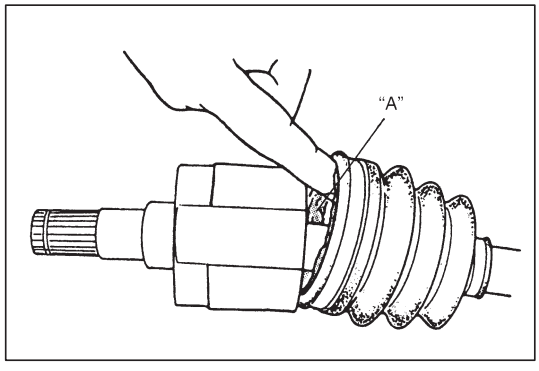

13) Apply grease to tripod joint and inside of housing then install housing. Use grease supplied with spare parts.

"A": GKN1 LUBER C grease/Color: Amber or brown & semi-opaque

Grease capacity: About 85 – 105 g (3.0 – 3.7 oz)

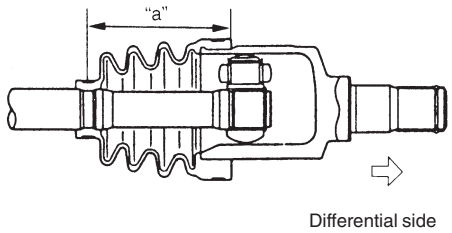

14) Fit boot to grooves of shaft and housing and adjust boot length to specification below. Insert screwdriver into boot and allow air to enter boot so that air pressure in boot becomes the same as atmospheric pressure.

Length "a": 80 – 90 mm (3.15 – 3.54 in.)

> **CAUTION:**
> - **To prevent any problem caused by washing solution, do not wash joint boots and tripod joint except its housing. Degreasing of those parts with cloth is allowed.**
> - **Do not squeeze or distort boot when fastening it with bands. Distorted boot caused by squeezing air may reduce its durability.**

15) Install and fasten new big and small bands at that position of step 14) in the same procedure as previous steps 6) to 9).

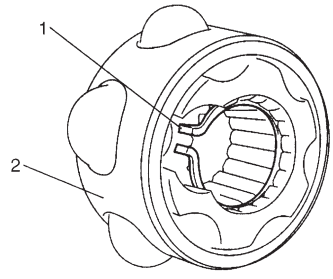

For DOJ type drive shaft (left side)

1) Wash disassembled parts (except boots). After washing, dry parts completely by blowing air.
2) Clean boots with cloth. Do not wash boots in degreaser, such as gasoline or kerosene, etc.
   Washing in degreaser causes deterioration of boot.
3) Install retaining ring (1) to cage (2).

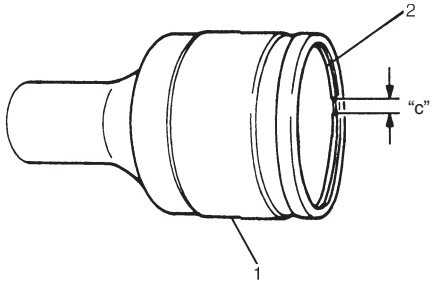

4) Insert cage into housing (1) and fit snap ring (2) into groove of housing.

> **CAUTION:**
> **Position opening of snap ring "c" so that it will not be lined up with a ball.**

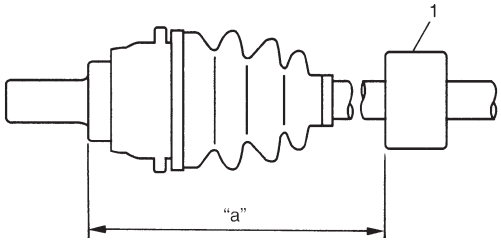

5) Install new wheel side boot on shaft according to steps 3) to 9) for Tripod Joint Type Drive Shaft Assembly.
6) Install damper (1) on drive shaft according to dimension specified below. (For M/T model only)

Length "a": 134 – 140 mm (5.3 – 5.5 in.)

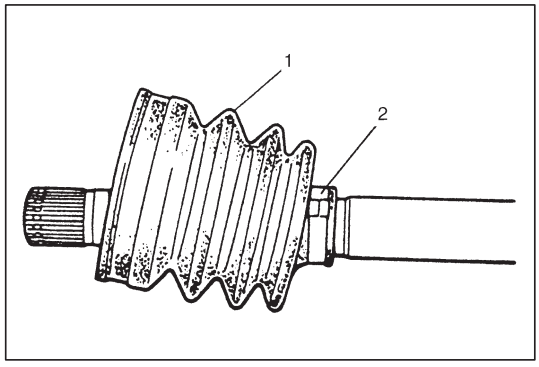

7) Set new differential side small band (2) and differential side boot (1) on shaft temporarily.

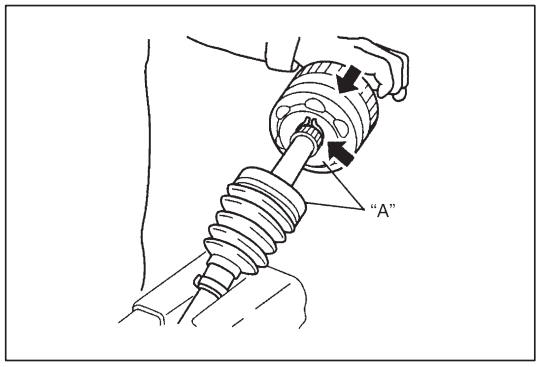

8) Apply grease to DOJ and inside of housing.
Use grease supplied with spare parts.

"A": Thermax grease/Color: Black

Grease capacity: About 50 – 70 g (1.8 – 2.5 oz)

9) Place DOJ onto spline of drive shaft and drive onto drive shaft by using plastic hammer until retaining ring engages.

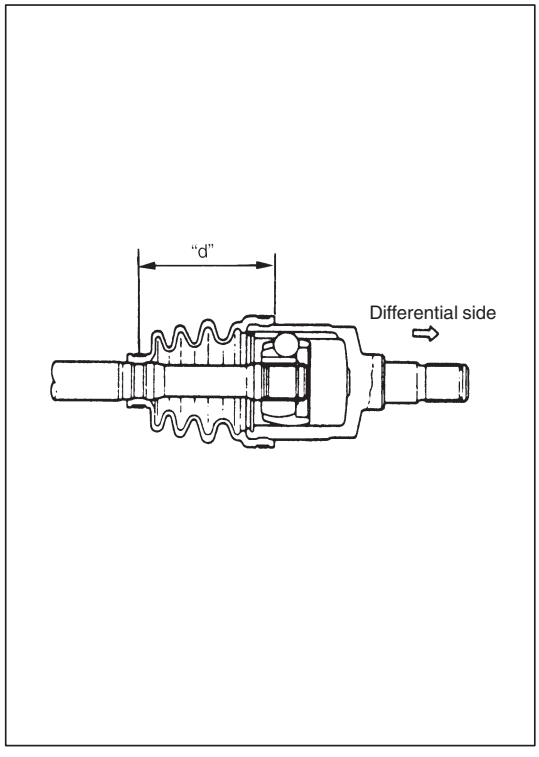

10) Fit boot to grooves of shaft and housing and adjust length "d" to specification below.
Insert screwdriver into boot and allow air to enter boot so that air pressure in boot becomes the same as atmospheric pressure.

Length "d": 80 – 90 mm (3.15 – 3.54 in.)

CAUTION:
- **To prevent any problem caused by washing solution, do not wash joint boots. Degreasing of those parts with cloth is allowed.**
- **Do not squeeze or distort boot when fastening it with bands.**
  Distorted boot caused by squeezing air may reduce its durability.

11) Install and fasten new big and small bands at that position of step 10) in the same procedure as steps 6) to 9) of Tripod Joint Type Drive Shaft Assembly.

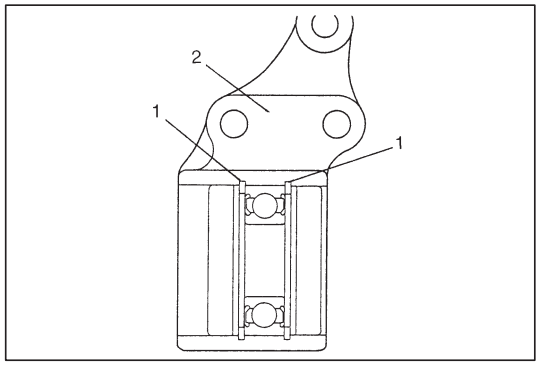

For Center shaft and Center bearing support

Install center shaft by reversing removal procedure and noting following points

- When installing bearing support circlip (1), make sure that it fits in circlip groove in center bearing support (2) securely as shown.

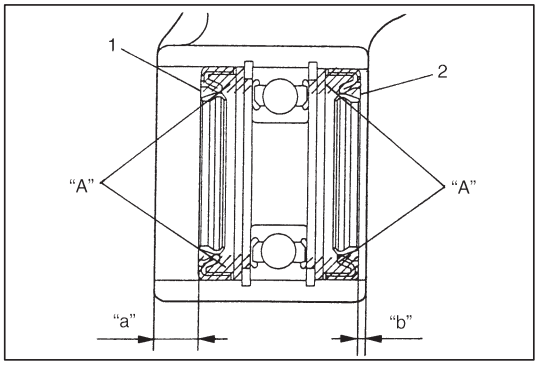

- When installing left oil seal (1) and right oil seal (2), use care so that oil seals in proper direction and position as shown figure.

  Distance "a": 11 – 12 mm (0.43 – 0.47 in.)
  "b": 2 – 3 mm (0.08 – 0.12 in.)

- Be sure to apply grease to oil seal lip and bearing side space indicated in figure.

  "A": Grease 99000-25010

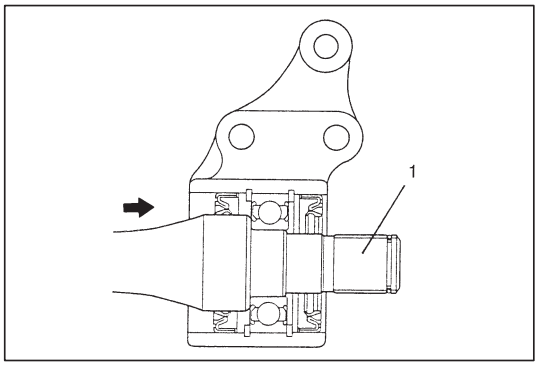

- Press-fit center shaft (1) from left oil seal side.

INSTALLATION

CAUTION:
- **To avoid excessive expansion of boot and consequential disconnection of joint in boot, do not pull tripod joint housing.**
- **Protect oil seals and boots from any damage, preventing them from unnecessary contact while installing drive shaft.**
- **Do not hit joint boot with hammer. Inserting joint only by hands is allowed.**
- **Make sure that differential side joint is inserted fully and its snap ring is seated as it was.**

Install drive shaft assembly by reversing removal procedure and noting the following points.
- Install wheel side joint to steering knuckle first and then differential side joint to transmission or center shaft.
- Tighten each bolt and nut to the specified torque.
  Refer to figure of the beginning of ON-VEHICLE SERVICE for specified tightening torque.
- Apply sealant to drain plug for manual transmission.
- Fill transmission with oil as specified. (Refer to SECTION 7A.)
- For automatic transmission, carry out full step of fluid level check procedure i.e. LEVEL CHECK, referring to Section 7B.
- Check toe seating and adjust as required.

REQUIRED SERVICE MATERIAL

MATERIAL	RECOMMENDED SUZUKI PRODUCT	USE
Sealant	SUZUKI BOND NO. 1215 (99000-31110)	Oil drain and filler/level plugs for manual transmission
Lithium grease	SUZUKI SUPER GREASE A (99000-25010)	Center bearing side space of oil seal

SPECIAL TOOLS

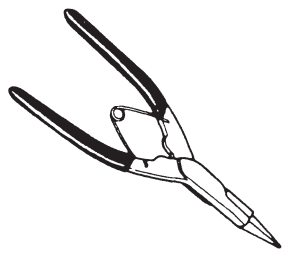	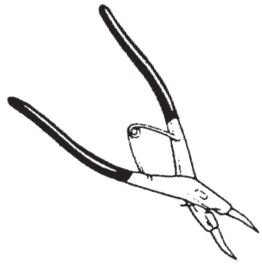	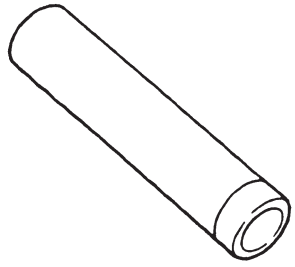	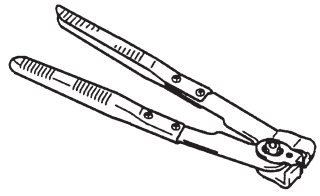
09900-06107 Snap ring pliers (Open type)	09900-06108 Snap ring pliers (Closing type)	09925-98221 Bearing installer	09943-55010 (J-22610) Boot clamp plier

SECTION 5
BRAKES

WARNING:
For vehicles equipped with Supplemental Restraint (Air Bag) System:
- **Service on and around the air bag system components or wiring must be performed only by an authorized SUZUKI dealer. Refer to "Air Bag System Components and Wiring Location View" under "General Description" in air bag system section in order to confirm whether you are performing service on or near the air bag system components or wiring. Please observe all WARNINGS and "Service Precautions" under "On-Vehicle Service" in air bag system section before performing service on or around the air bag system components or wiring. Failure to follow WARNINGS could result in unintentional activation of the system or could render the system inoperative. Either of these two conditions may result in severe injury.**
- **Technical service work must be started at least 90 seconds after the ignition switch is turned to the "LOCK" position and the negative cable is disconnected from the battery. Otherwise, the system may be activated by reserve energy in the Sensing and Diagnostic Module (SDM).**

NOTE:
- **When inspecting and servicing vehicle equipped with ABS, be sure to refer to section 5E1 first.**
- **All brake fasteners are important attaching parts in that they could affect the performance of vital parts and systems, and/or could result in major repair expense. They must be replaced with one of same part number or with an equivalent part if replacement becomes necessary. Do not use a replacement part of lesser quality or substitute design. Torque values must be used as specified during reassembly to assure proper retention of all parts. There is to be no welding as it may result in extensive damage and weakening of the metal.**

CONTENTS

GENERAL DESCRIPTION

When the foot brake pedal is depressed, hydraulic pressure is developed in the master cylinder to actuate pistons (two in front and four in rear).
The master cylinder is a tandem master cylinder. Brake pipes are connected to the master cylinder and they make two independent circuits. One connects front right & rear left brakes and the other connects front left & rear right brakes.
The load sensing proportioning valve (LSPV) is included in these circuits between the master cylinder and the rear brake for the vehicle without ABS.
In this brake system, the disc brake type is used for the front wheel brake and a drum brake type (leading/trailing shoes) for the rear brake.
The parking brake system is mechanical. It applies brake force to only rear wheels by means of the cable and mechanical linkage system. The same brake shoes are used for both parking and foot brakes.

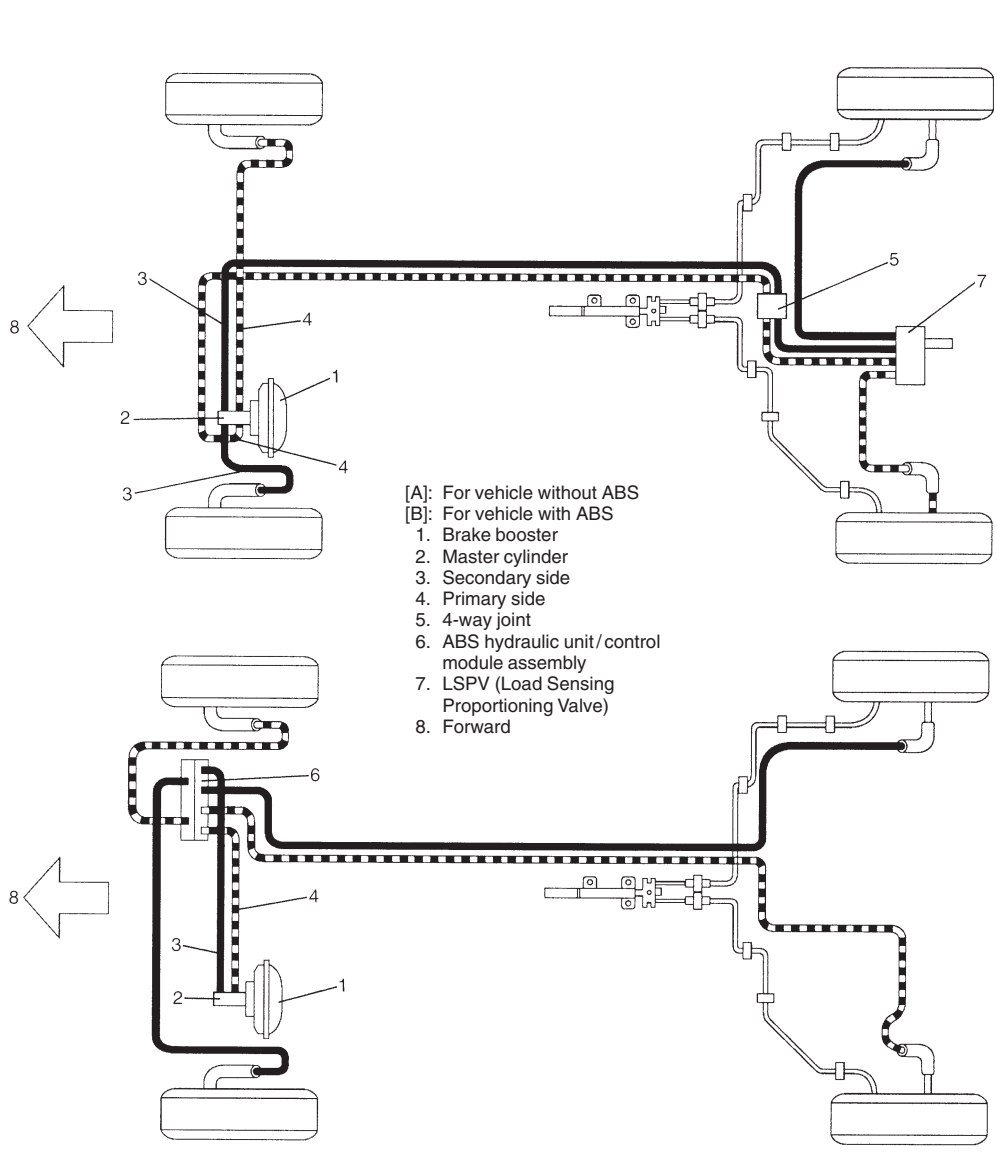

NOTE:
The above figures shows left-hand steering vehicle.
The figure for right-hand steering vehicle should be symmetrical.

DIAGNOSIS

ROAD TESTING BRAKES

Brakes should be tested on dry, clean, smooth and reasonably level roadway which is not crowned. Road test brakes by making brake applications with both light and heavy pedal forces at various speeds to determine if the vehicle stops evenly and effectively.
Also drive vehicle to see if it leads to one side or the other without brake application. If it does, check the tire pressure, front end alignment and front suspension attachments for looseness. See diagnosis table for other causes.

BRAKE FLUID LEAKS

Check the master cylinder fluid levels. While a slight drop in reservoir level does result from normal lining wear, an abnormally low level indicates a leak in the system. In such a case, check the entire brake system for leakage. If even a slight evidence of leakage is noted, the cause should be corrected or defective parts should be replaced.
If fluid level is lower than the minimum level of reservoir, refilling is necessary. Fill reservoir with specified brake fluid.

Brake fluid: Refer to reservoir tank cap.

CAUTION:
Since brake system of this vehicle is factory-filled with brake fluid indicated on reservoir tank cap, do not use or mix different type of fluid when refilling; otherwise serious damage will occur.
Do not use old or used brake fluid, or any fluid from a unsealed container.

SUBSTANDARD OR CONTAMINATED BRAKE FLUID

Improper brake fluid, mineral oil or water in the fluid may cause the brake fluid to boil or the rubber components in the hydraulic system to deteriorate.

If deterioration of rubber is evident, disassemble all hydraulic parts and wash with alcohol. Dry these parts with compressed air before assembly to keep alcohol out of the system. Replace all rubber parts in the system, including hoses. Also, when working on the brake mechanisms, check for fluid on the linings. If excessive fluid is found, replace the linings.

The system must be flushed if there is any doubt as to the grade of fluid in the system or if fluid has been used which contained parts that have been subjected to contaminated fluid.

DIAGNOSIS TABLE

Condition	Possible Cause	Correction
Not enough braking force	● Brake oil leakage from brake lines.	Locate leaking point and repair.
	● Brake disc or pads stained with oil.	Clean or replace.
	● Overheated brakes.	Determine cause and repair.
	● Poor contact of shoes on brake drum.	Repair for proper contact.
	● Brake shoes linings stained with oil or wet with water.	Replace.
	● Badly worn brake shoe linings.	Replace.
	● Defective wheel cylinders.	Repair or replace.
	● Malfunctioning caliper assembly.	Repair or replace.
	● Air in system.	Bleed system.
	● Maladjusted sensor spring length of LSPV if equipped.	Check or adjust.
	● Broken sensor spring of LSPV if equipped.	Replace.
	● Defective LSPV if equipped.	Replace.
	● Malfunctioning ABS (Antilock brake system), if equipped.	Check system and replace as necessary.
Brake pull (Brakes not working in unison)	● Pad or shoe linings are wet with water or stained with oil in some brakes.	Replace.
	● Drum-to-shoe clearance out of adjustment in some brakes. (Malfunctioning auto adjusting mechanism).	Check for inoperative auto adjusting mechanism.
	● Drum is out of round in some brakes.	Replace.
	● Wheel tires are inflated unequally.	Inflate equally.
	● Malfunctioning wheel cylinders.	Repair or replace.
	● Disturbed front end alignment.	Adjust as prescribed.
	● Unmatched tires on same axle.	Tires with approximately the same amount of tread should be used on the same axle.
	● Restricted brake pipes or hoses.	Check for soft hoses and damaged lines. Replace with new hoses and new brake pipes.
	● Malfunctioning caliper assembly.	Check for stuck or sluggish pistons and proper lubrication of caliper slide bush. Caliper should slide.
	● Loose suspension parts.	Check all suspension mountings.
	● Loose calipers.	Check and torque bolts to specifications.
Noise (high pitched squeak without brake applied)	● Front lining worn out.	Replace linings.
Rear brake locked prematurely	● Maladjusted sensor spring length of LSPV if equipped.	Check or adjust.
	● Malfunction LSPV assembly if equipped.	Replace assembly.
Brake locked (For vehicles equipped with ABS)	● Malfunctioning ABS, if equipped.	Check system and replace as necessary.

Condition	Possible Cause	Correction
Excessive pedal travel (Pedal stroke too large)	● Partial brake system failure.	Check brake systems and repair as necessary.
	● Insufficient fluid in master cylinder reservoirs.	Fill reservoirs with approved brake fluid. Check for leaks and air in brake systems. Check warning light. Bleed system if required.
	● Air in system. (pedal soft/spongy)	Bleed system.
	● Rear brake system not adjusted (malfunctioning auto adjusting mechanism).	Repair auto adjusting mechanism. Adjust rear brakes.
	● Bent brake shoes.	Replace brake shoes.
	● Worn rear brake shoes.	Replace brake shoes.
Dragging brakes (A very light drag is present in all disc brakes immediately after pedal is released)	● Master cylinder pistons not returning correctly.	Replace master cylinder.
	● Restricted brake pipes or hoses.	Check for soft hoses or damaged pipes and replace with new hoses and/or new brake pipes.
	● Incorrect parking brake adjustment on rear brakes.	Check and adjust to correct specifications.
	● Weakened or broken return springs in the brake.	Replace.
	● Sluggish parking-brake cables.	Repair or replace.
	● Wheel cylinder or caliper piston sticking.	Repair as necessary.
	● Malfunctioning ABS, if equipped with ABS.	Check system and replace as necessary.
Pedal pulsation (Pedal pulsates when depressed for braking)	● Damaged or loose wheel bearings.	Replace wheel bearings.
	● Distorted steering knuckle or rear wheel spindle.	Replace knuckle or rear wheel spindle.
	● Excessive disc lateral runout.	Check per instructions. If not within specifications, replace or machine the disc.
	● Parallelism not within specifications.	Check per instructions. If not with specifications, replace or machine the disc.
	● Rear drums out of round.	Check runout. Repair or replace drum as necessary.
NOTE: **For vehicle equipped with ABS, pulsation of fluid pressure may be felt through brake pedal while ABS is being operated. But it does not indicate any abnormality.**		
Braking noise	● Glazed shoe linings, or foreign matters stuck to linings.	Repair or replace shoe linings.
	● Worn or distorted shoe linings.	Replace shoe linings (or pads).
	● Loose front wheel bearings.	Replace wheel bearings.
	● Distorted backing plates or loose mounting bolts.	Replace or retighten securing bolts.

Condition	Possible Cause	Correction
Brake warning light turns on after engine start	● Parking brake applied. ● Insufficient amount of brake fluid. ● Brake fluid leaking from brake line. ● Brake warning light circuit faulty. ● Malfunctioning ABS, if equipped with ABS.	Release parking brake and check that brake warning light turns off. Add brake fluid. Investigate leaky point, correct it and add brake fluid. Refer to “DIAGNOSIS” of ABS section. Check system referring to “DIAGNOSIS” of ABS section.
Brake warning light turns on when brake is applied	● Brake fluid leaking from brake line. ● Insufficient amount of brake fluid.	Investigate leaky point, correct it and add brake fluid. Add brake fluid.
Brake warning light fails to turn on even when parking brake is applied	● Bulb burnt out. ● Brake warning light circuit open.	Replace bulb. Repair circuit.
ABS warning light does not turn on for 2 sec. after ignition switch has turned ON.	● Bulb burnt out. ● ABS warning light circuit open, if equipped with ABS. (including check relay)	Replace bulb. Check system referring to “DIAGNOSIS” of ABS section.
ABS warning light remains on after ignition switch has turned on for 2 sec.	● Malfunctioning ABS, if equipped with ABS.	Check system referring to “DIAGNOSIS” of ABS section.

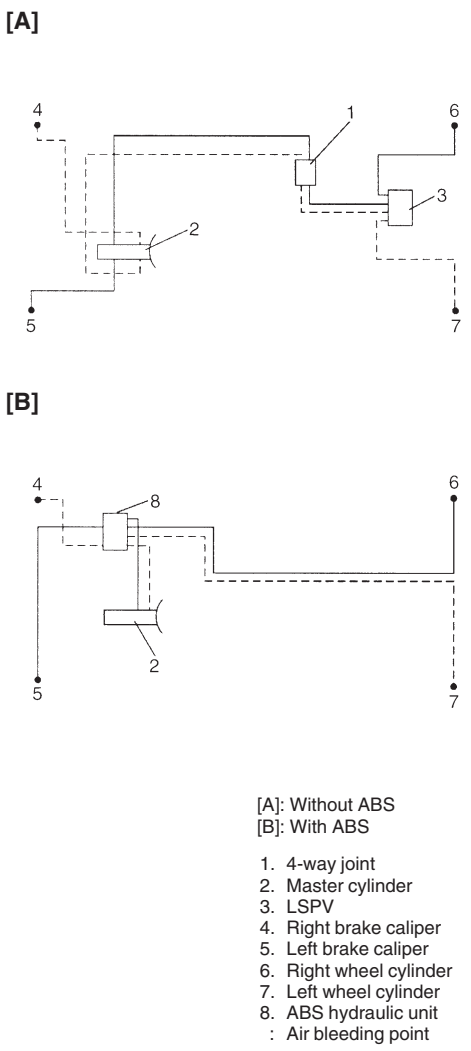

[A]: Without ABS
[B]: With ABS

1. 4-way joint
2. Master cylinder
3. LSPV
4. Right brake caliper
5. Left brake caliper
6. Right wheel cylinder
7. Left wheel cylinder
8. ABS hydraulic unit
: Air bleeding point

CHECK AND ADJUSTMENT

BLEEDING BRAKES

CAUTION:
Brake fluid is extremely damaging to paint. If fluid should accidentally touch painted surface, immediately wipe fluid from paint and clean painted surface.

NOTE:
For vehicle equipped with ABS, make sure that ignition switch turns off.

Hydraulic lines of brake system are based on the diagonal split system. When a brake pipe or hose was disconnected at the wheel, bleeding operation must be performed at both ends of the line of the removed pipe or hose. When any joint part of the master cylinder or other joint part between the master cylinder and each brake (wheel) was removed, the hydraulic brake system must be bled at all 4 wheel brakes.

NOTE:
Perform bleeding operation starting with wheel cylinder farthest from master cylinder and then at front caliper of the same brake line. Do the same on the other brake line.

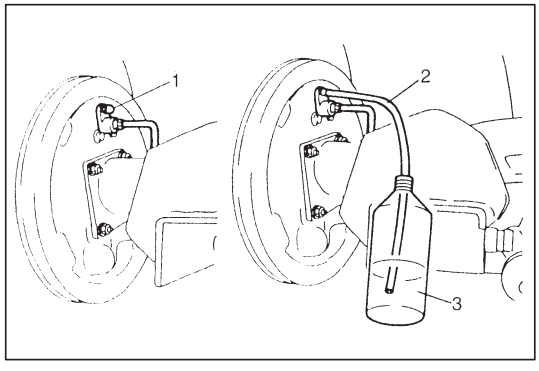

1) Fill master cylinder reservoir with brake fluid and keep at least one-half full of fluid during bleeding operation.
2) Remove bleeder plug cap (1).
   Attach a vinyl tube (2) to bleeder plug of wheel cylinder, and insert the other end into container (3).

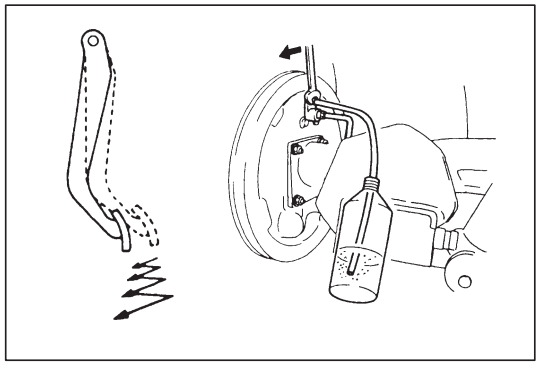

3) Depress brake pedal several times, and then while holding it depressed, loosen bleeder plug about one-third to one half turn.

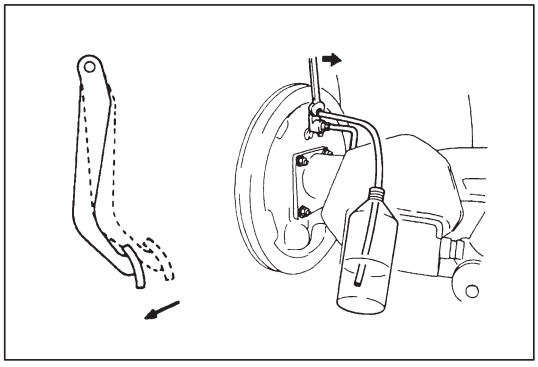

4) When fluid pressure in the cylinder is almost depleted, retighten bleeder plug.

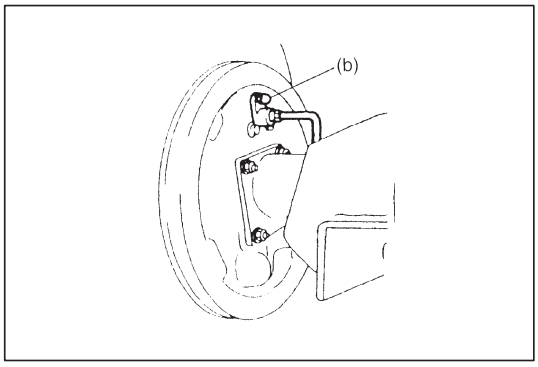

5) Repeat this operation until there are no more air bubbles in hydraulic line.
6) When bubbles stop, with depressing brake pedal, tighten bleeder plug.

Tightening Torque
(b): 8.5 N·m (0.85 kg-m, 6.5 lb-ft) . . . . . for rear brake
6.5 N·m (0.65 kg-m, 5.0 lb-ft) . . . . . for front brake

7) Then attach bleeder plug cap.

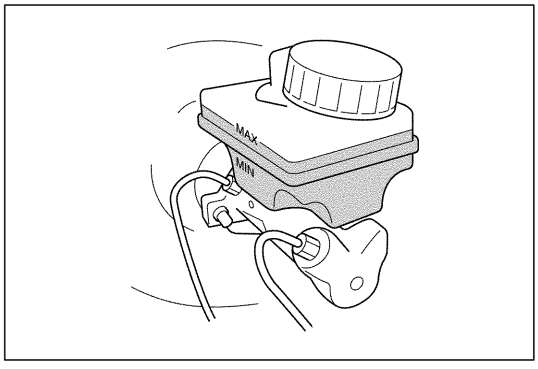

8) After completing bleeding operation, apply fluid pressure to pipe line and check for leakage.
9) Replenish fluid into reservoir up to specified level.
10) Check brake pedal for “sponginess”. If found spongy, repeat entire procedure of bleeding.

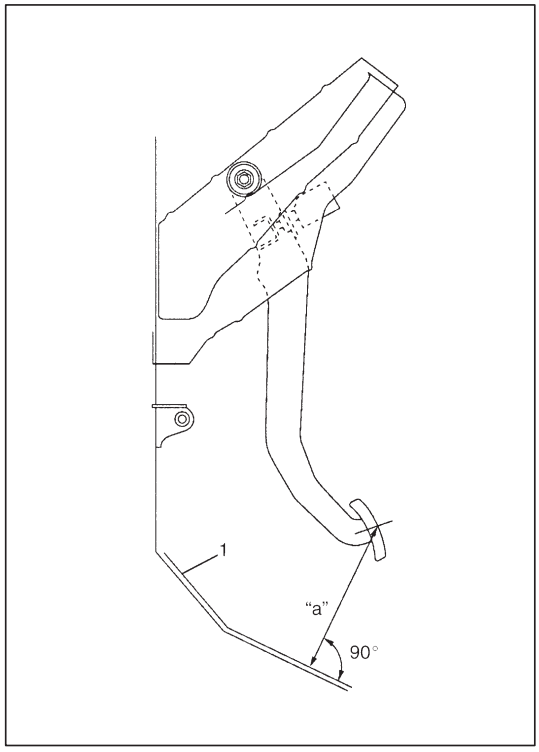

BRAKE PEDAL FREE HEIGHT CHECK

Peel off carpet and check brake pedal for free height.

Brake pedal free height "a"
from silencer (1) : 150 – 160 mm (5.9 – 6.3 in.)

If it is not within specification, check and adjust the following items 1) to 4).

1) Check brake pedal for dent.
2) Check that brake booster is installed securely.
3) Check stop light switch position referring to BRAKE LIGHT SWITCH CHECK below.
4) Check measurement between booster mounting surface and center of clevis pin hole referring to BRAKE BOOSTER INSPECTION in section 5A.

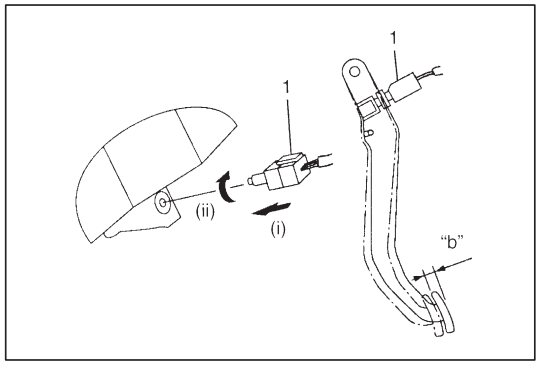

BRAKE (STOP) LIGHT SWITCH CHECK

1) Check that stop light lights when brake pedal is depressed the specified distance.

   Distance "b": 10 – 20 mm (0.4 – 0.8 in.)

   If check result is not as specified, adjust stop light switch (1) position so that stop light lights when brake pedal is depressed the specified distance.
2) Check that stop light is turned off when brake pedal released.

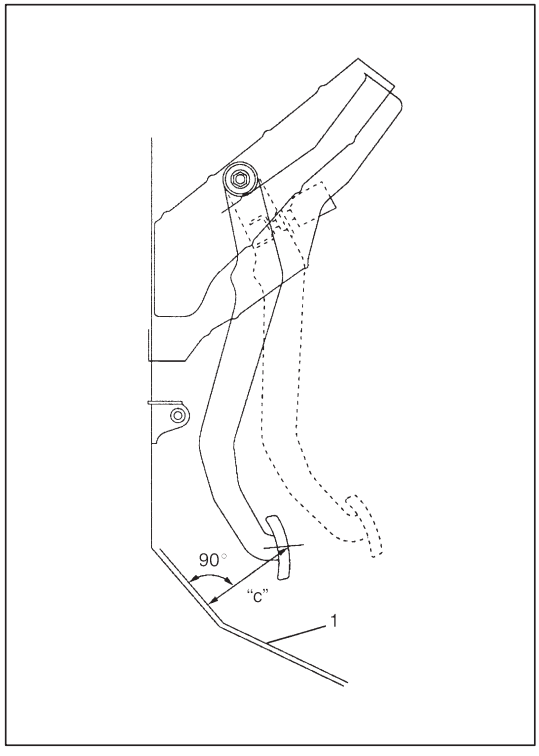

EXCESSIVE PEDAL TRAVEL CHECK

1) Peel off carpet and start engine.
2) Depress brake pedal a few times.
3) With brake pedal depressed with approximately 30 kg (66 lbs) load, measure pedal to silencer (1) clearance "c".

   Clearance "c": over 100 mm (3.94 in.)

4) If clearance "c" is less than 100 mm (3.94 in.), the most possible cause is either rear brake shoes are worn out beyond limit or air is in lines.
   Should clearance "c" remain less than 100 mm (3.94 in.) even after replacement of brake shoes and bleeding of system, troubleshoot brake system.

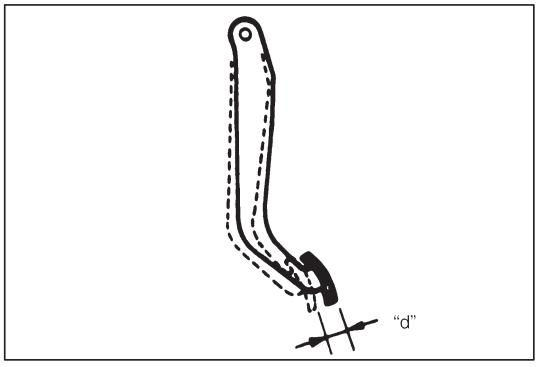

BRAKE PEDAL PLAY CHECK

Pedal play should be within specification. If out of specification, check brake light switch for proper installation position and adjust if necessary.
Also check pedal shaft bolt and master cylinder pin installation for looseness and replace if defective.

Pedal play "d": 1 – 8 mm (0.04 – 0.32 in.)

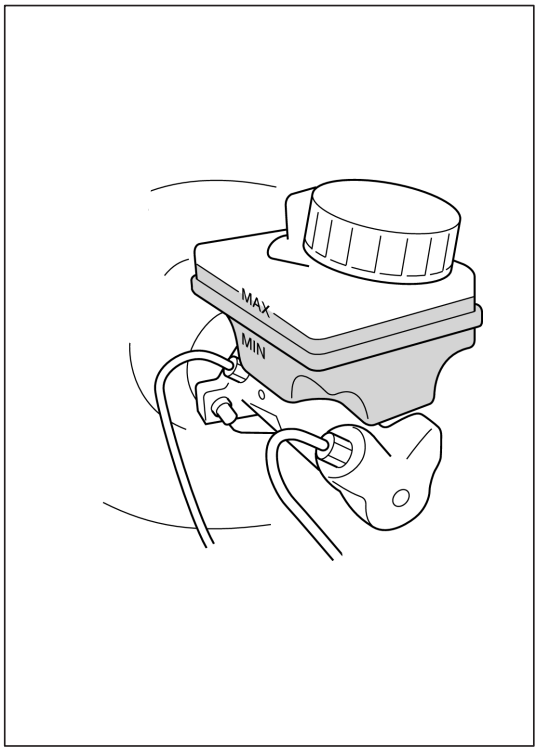

BRAKE FLUID LEVEL CHECK

Be sure to use particular brake fluid either as indicated on reservoir cap of that vehicle or recommended in owner's manual which comes along with that vehicle.
Use of any other fluid is strictly prohibited.
Fluid level should be between MIN and MAX lines marked on reservoir.
When warning light lights sometimes during driving, replenish fluid to MAX line.
When fluid decreases quickly, inspect brake system for leakage. Correct leaky points and then refill to specified level.

CAUTION:
Do not use shock absorber fluid or any other fluid which contains mineral oil. Do not use a container which has been used for mineral oil or a container which is wet from water. Mineral oil will cause swelling and distortion of rubber parts in hydraulic brake system and water mixed into brake fluid will lower fluid boiling point. Keep all fluid containers capped to prevent contamination.

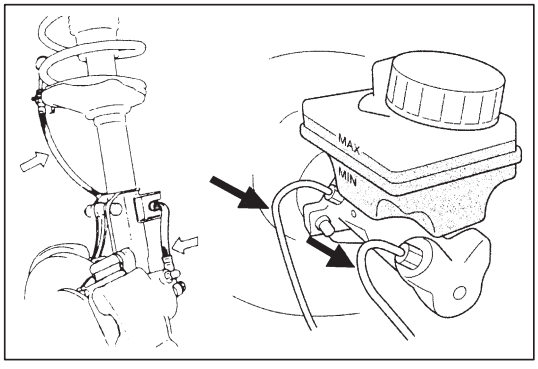

BRAKE HOSE AND PIPE CHECK

The brake hose assembly should be checked for road hazard damage, for cracks and chafing of the outer cover, for leaks and blisters. A light and mirror may be needed for an adequate inspection. If any of the above conditions are observed on the brake hose, it is necessary to replace it.
Inspect the pipe for damage, cracks, dents and corrosion. If any defect is found, replace it.

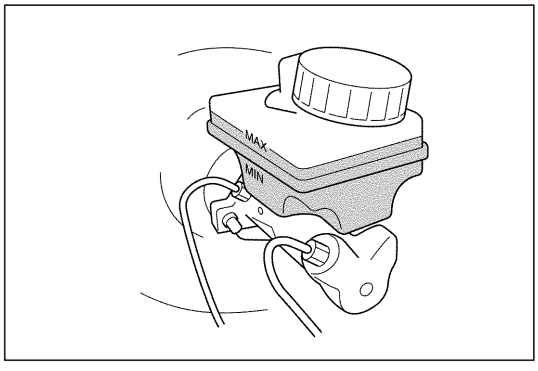

MASTER CYLINDER CHECK

Check for a cracked master cylinder casting or brake fluid around the master cylinder. Leaks are indicated only if there is at least a drop of fluid. A damp condition is not abnormal.

BRAKE DISC CHECK

Refer to item FRONT DISC BRAKE PAD INSPECTION of Section 5B for inspection point and procedure.

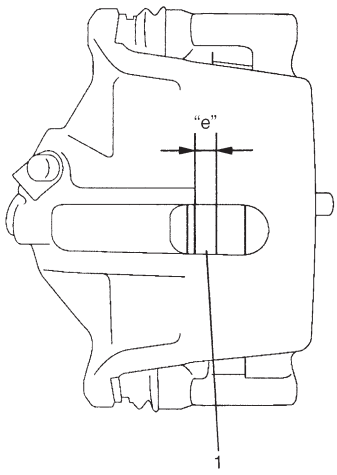

BRAKE PAD CHECK

Inspect pad linings periodically according to maintenance schedule whenever wheels are removed (for tire rotation or other reason). Take a look through hole of caliper and check lining (1) thickness of each pad.

Thickness "e"
Service Limit: 2.0 mm (0.08 in.)

If one of brake pad is worn to service limit, all linings must be replaced at the same time.

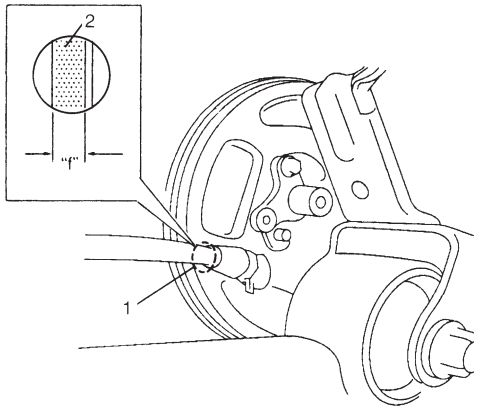

BRAKE SHOE CHECK

Inspection should be carried out on the following points after brake pedal travel "c" (pedal to silencer clearance) check as described on previous page of this section, even when it is more than specification.

Amount of brake shoe wear can be checked as follows.

1) Hoist vehicle.
2) Remove rubber cover (plug) (1) from brake back plate.
3) Through hole of back plate, visually check for thickness of brake shoe lining (2). If lining thickness "f" is found less than below specified wear limit, replace all brake shoes with new ones.

   Thickness "f"
   Service Limit: 1.0 mm (0.04 in.)

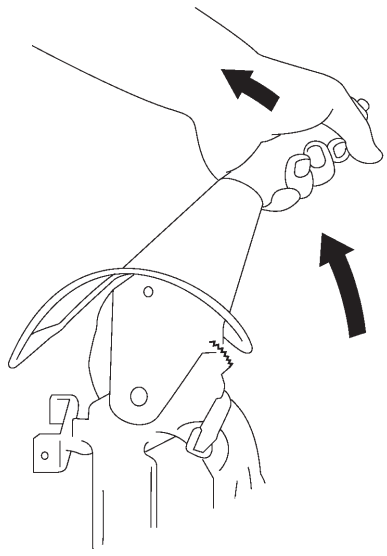

PARKING BRAKE INSPECTION AND ADJUSTMENT

Inspection

Hold center of parking brake lever grip and pull it up with 200 N (20 kg, 44 lbs) force.

With parking brake lever pulled up as shown, count ratchet notches. There should be 4 to 9 notches.

Also, check if both right and left rear wheels are locked firmly.

To count number of notches easily, listen to click sounds that ratchet makes while pulling parking brake lever without pressing its button. One click sound corresponds to one notch.

If number of notches is out of specification, adjust cable referring to adjustment procedure so as to obtain specified parking brake stroke.

NOTE:

Check tooth tip of each notch for damage or wear. If any damage or wear is found, replace parking brake lever.

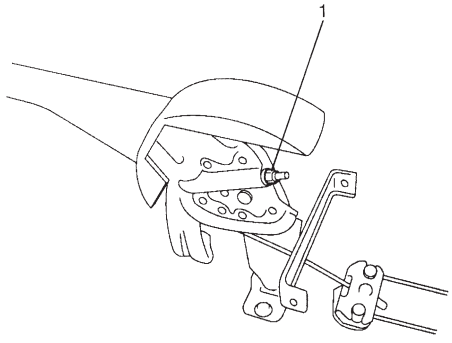

Adjustment

NOTE:

Make sure for the following conditions before cable adjustment.

- **No air is trapped in brake system.**
- **Brake pedal travel is proper.**
- **Brake pedal is depressed repeatedly with about 300 N (30 kg, 66 lbs) load until adjuster actuator clicking sound can not be heard from drum brake.**
- **Parking brake lever is pulled up a few times with about 500 N (50 kg, 110 lbs) force.**
- **Rear brake shoes are not worn beyond limit, and self adjusting mechanism operates properly.**
- **If parking brake lever stroke is less than specification, loosen adjusting nut (1) as far as end of bolt. Then depress brake pedal repeatedly with about 300 N (30 kg, 66 lbs) load until adjuster actuator clicking sound can not be heard from drum brake.**

After confirming that above conditions are all satisfied, adjust parking brake lever stroke by loosening or tightening adjust nut.

NOTE:

Check brake drum for dragging after adjustment.

Parking brake stroke: 4 to 9 notches
(When lever is pulled up at 200 N (20 kg, 44 lbs))

FLUSHING BRAKE HYDRAULIC SYSTEM

It is recommended that entire hydraulic system be thoroughly flushed with clean brake fluid whenever new parts are installed in hydraulic system.
Periodical change of brake fluid is also recommended.

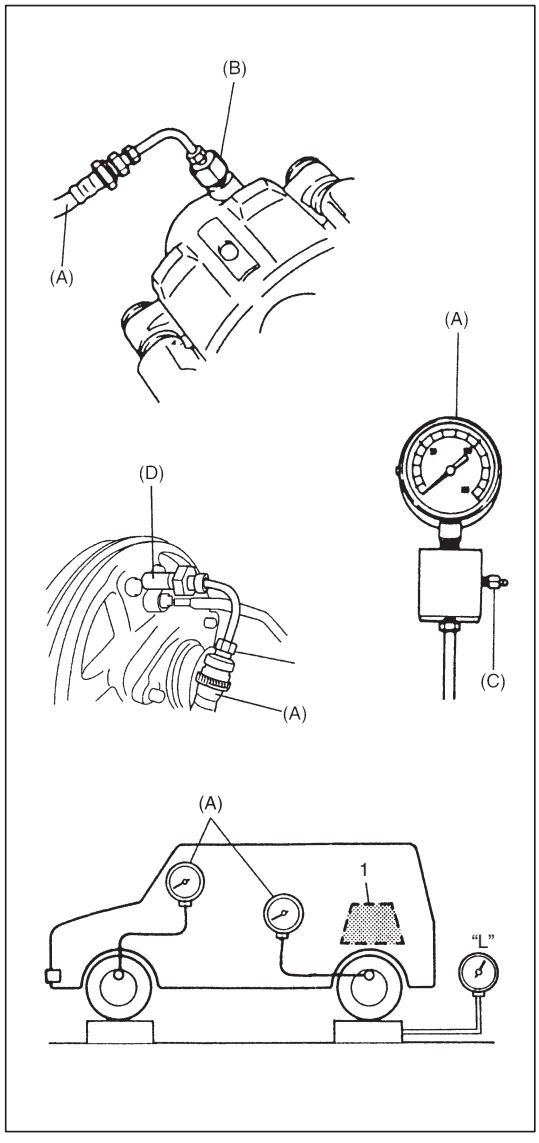

FLUID PRESSURE TEST (if equipped with LSPV)

Test procedure for LSPV assembly is as follows.

Before testing, confirm the following.
- Fuel tank is filled with fuel fully.
- Vehicle is equipped with spare tire, tools, jack and jack handle.

1) Stop vehicle on level floor and place approximately about 1,000 N (100 kg, 220 lbs) weight (1) on rear housing so that rear axle weighs 4,500 N (450 kg, 992 lbs).

   Rear axle weight "L": 4,500 N (450 kg, 992 lbs)

2) Install special tool to front and rear brake.

   NOTE:
   Pressure gauge should be connected to bleeder plug hole of front (left side brake) and rear (right side brake).
   After testing front left side and rear right side, test front right side and rear left side in the same way.

   Special Tool
   Front brake
   (A): 09956-02310
   (B): 09952-36310
   (C): 55473-82030 (Air bleeder plug as a spare part)

   NOTE:
   For front brake, use special tool (B) instead of thread diameter 10 mm attachment included in special tool (A).

   Rear brake
   (A): 09956-02310
   (C): 55473-82030 (Air bleeder plug as a spare part)
   (D): 09952-48320

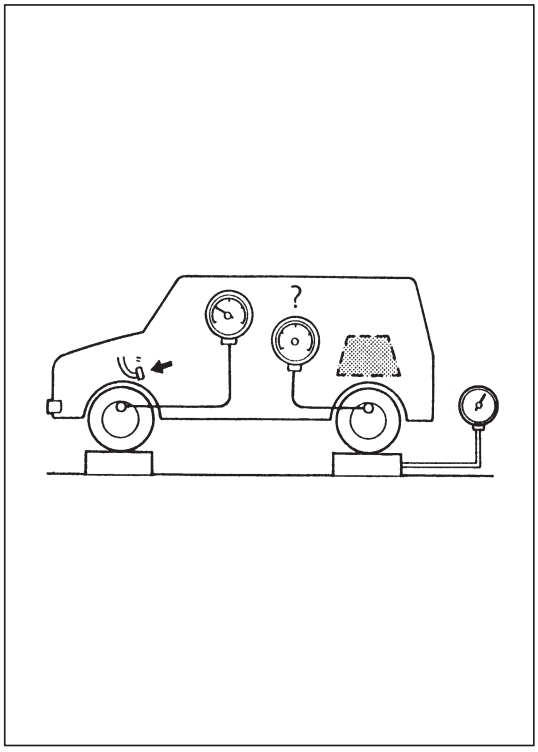

3) Depress brake pedal gradually till fluid pressure of front brake becomes as specified below and check corresponding pressure of rear brake then. It should be within specification given below.

Front brake	Rear brake
7,500 kPa 75 kg/cm^2 1,067 psi	5,600 – 7,100 kPa 56 – 71 kg/cm^2 796 – 1,009 psi

As done above, apply 100 kg/cm^2 pressure to front brake and check that rear brake pressure then is within specification as given below.

Front brake	Rear brake
10,000 kPa 100 kg/cm^2 1,422 psi	6,300 – 7,900 kPa 63 – 79 kg/cm^2 896 – 1,123 psi

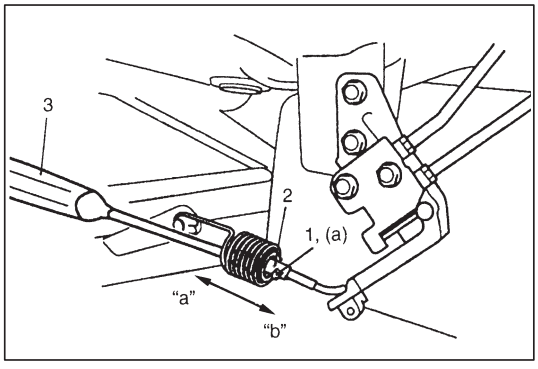

4) If rear brake pressure is not within specification, adjust it by changing spring bracket (2) position as follows.
   - If rear brake pressure is higher than specification, move spring bracket (2) to direction "a" and if it is lower, to direction "b" by pushing spring bracket with a screw driver (3).
   - Repeat steps 3) and 4) until rear brake pressure is within specification.
   - After adjustment, be sure to torque screw (1) to specification.

   Tightening Torque
   (a): 5 N·m (0.5 kg-m, 4.0 lb-ft)

5) Upon completion of fluid pressure test, bleed brake system and perform brake test.

BOOSTER OPERATION CHECK

There are two ways to perform this inspection, with and without a tester. Ordinarily, it is possible to roughly determine its condition without using a tester.

NOTE:
For this check, make sure that no air is in hydraulic line.

INSPECTION WITHOUT TESTER

Check Air Tightness

1) Start engine.
2) Stop engine after running for 1 to 2 minutes.

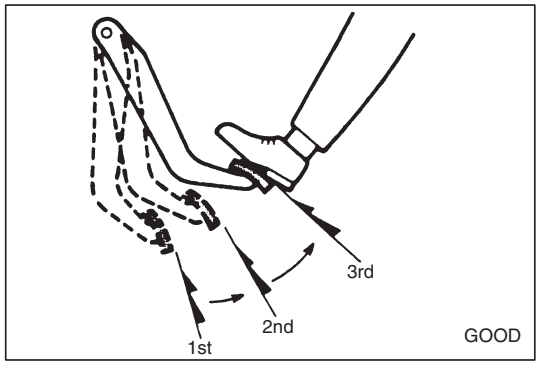

3) Depress brake pedal several times with the same load as in ordinary braking and observe pedal travel. If pedal goes down deep the first time but its travel decreases as it is depressed the second and more times, air tightness is obtained.

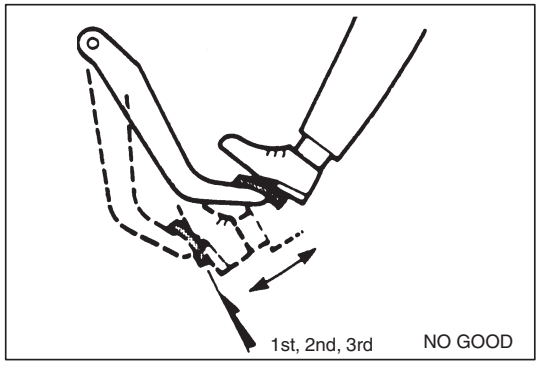

4) If pedal travel doesn't change, air tightness isn't obtained.

   NOTE:
   If defective, inspect vacuum lines and sealing parts, and replace any faulty part.
   When this has been done, repeat the entire test.

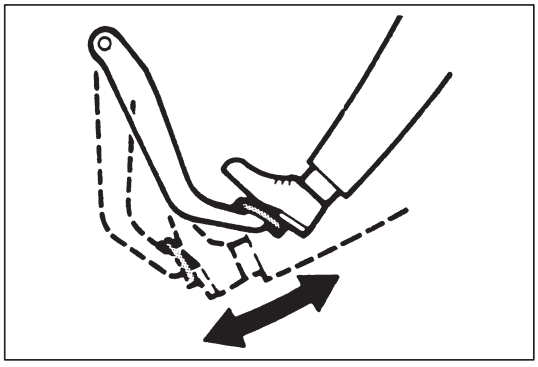

Check Operation

1) With engine stopped, depress brake pedal several times with the same load and make sure that pedal travel doesn't change.

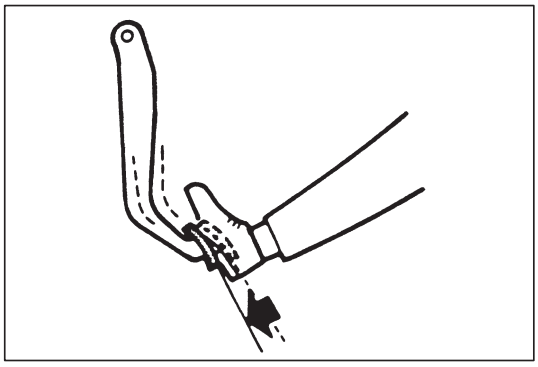

2) Start engine while depressing brake pedal. If pedal travel increases a little, operation is satisfactory. But no change in pedal travel indicates malfunction.

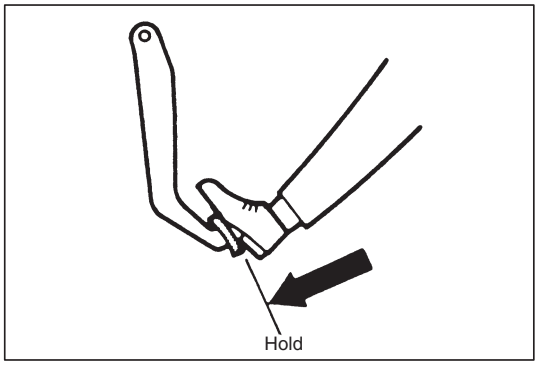

Check Air Tightness Under Load

1) With engine running, depress brake pedal. Then stop engine while holding brake pedal depressed.

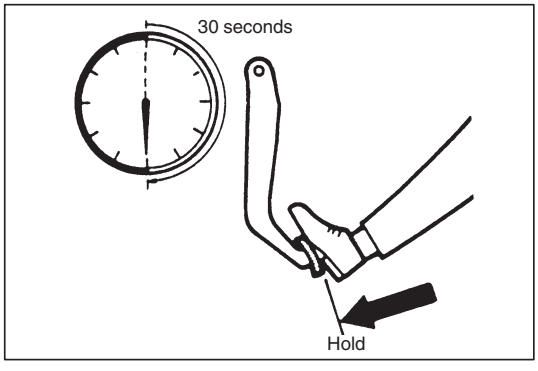

2) Hold brake pedal depressed for 30 seconds. If pedal height does not change, condition is good. But it isn't if pedal rises.

TIGHTENING TORQUE SPECIFICATIONS

Fastening parts		Tightening torque		
		N·m	kg-m	lb-ft
Brake pipe 4-way joint bolt		11	1.1	8.0
Brake pipe flare nut		16	1.6	11.5
Brake bleeder plug	Front caliper	6.5	0.65	5.0
	Wheel cylinder	8.5	0.85	6.5
LSPV mounting bolt		26	2.6	19.0
LSPV spring end nut		26	2.6	19.0
LSPV spring bracket screw		11	1.1	8.0
Wheel nut		85	8.5	61.5

REQUIRED SERVICE MATERIAL

MATERIALS	RECOMMENDED PRODUCT	USE
Brake fluid	DOT 4 or SAE J1704	● To fill master cylinder reservoir. ● To clean and apply to inner parts of caliper and wheel cylinder when they are disassembled.

SPECIAL TOOLS

	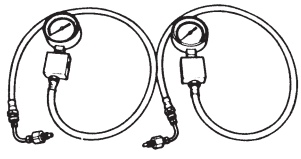	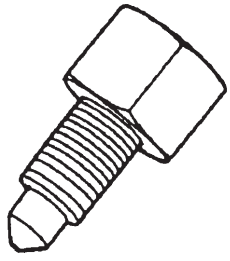	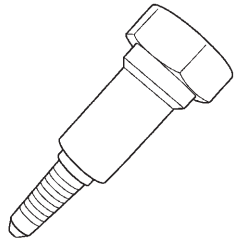
09950-78230 Flare nut wrench (10 × 11 mm)	09956-02310 Fluid pressure gauge	09952-36310 Pressure gauge attachment	09952-48320 Pressure gauge attachment

SECTION 5A

BRAKE PIPE/HOSE/MASTER CYLINDER

WARNING:
For vehicles equipped with Supplemental Restraint (Air Bag) System:

- **Service on and around the air bag system components or wiring must be performed only by an authorized SUZUKI dealer. Refer to "Air Bag System Components and Wiring Location View" under "General Description" in air bag system section in order to confirm whether you are performing service on or near the air bag system components or wiring. Please observe all WARNINGS and "Service Precautions" under "On-Vehicle Service" in air bag system section before performing service on or around the air bag system components or wiring. Failure to follow WARNINGS could result in unintentional activation of the system or could render the system inoperative. Either of these two conditions may result in severe injury.**
- **Technical service work must be started at least 90 seconds after the ignition switch is turned to the "LOCK" position and the negative cable is disconnected from the battery. Otherwise, the system may be activated by reserve energy in the Sensing and Diagnostic Module (SDM).**

NOTE:
All brake fasteners are important attaching parts in that they could affect the performance of vital parts and systems, and/or could result in major repair expense. They must be replaced with one of same part number or with an equivalent part if replacement becomes necessary. Do not use a replacement part of lesser quality or substitute design. Torque values must be used as specified during reassembly to assure proper retention of all parts. There is to be no welding as it may result in extensive damage and weakening of the metal.

CONTENTS

GENERAL DESCRIPTION

LSPV (Load Sensing Proportioning Valve) ASSEMBLY (if equipped)

As shown in figure below, LSPV is included within the brake circuit which connects the master cylinder and the rear wheel brake. It controls the hydraulic pressure applied to the rear wheel brake according to the loaded state of the vehicle (or weight of the load), whereby preventing the rear wheels from getting locked prematurely.

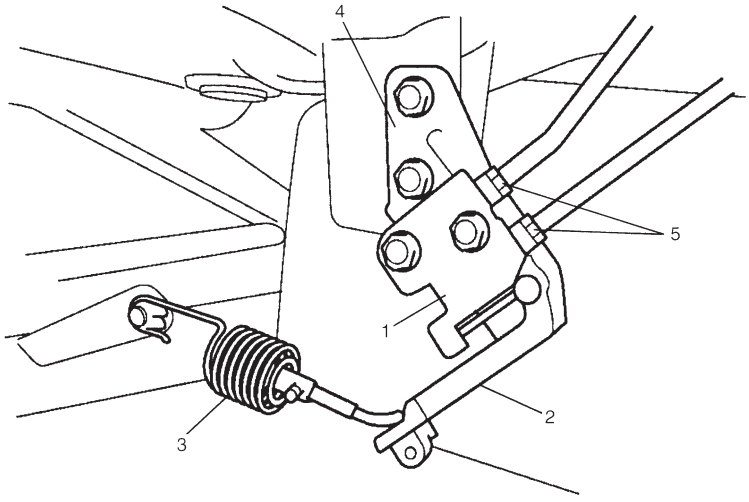

1. LSPV
2. LSPV lever
3. Spring
4. LSPV bracket
5. Brake flare nut

DIAGNOSIS

Refer to Section 5 BRAKES.

CHECK AND ADJUSTMENT

Refer to Section 5 BRAKES.

ON-VEHICLE SERVICE

CAUTION:
- **Lubricate rubber parts with clean, fresh brake fluid to ease assembly.**
- **Do not use lubricated shop air on brake parts as damage to rubber components may result.**
- **If any hydraulic component is removed or brake line disconnected, bleed the brake system.**
- **The torque values specified are for dry, unlubricated fasteners.**
- **Do not allow brake fluid to get on painted surfaces. Painted surfaces will be damaged by brake fluid.**

FRONT BRAKE HOSE/PIPE

REMOVAL

1) Raise and suitably support vehicle. Remove tire and wheel.
   This operation is not necessary when removing pipes connecting master cylinder and flexible hose.
2) Clean dirt and foreign material from both hose end or pipe end fittings. Remove brake hose or pipe.

INSTALLATION

1) Reverse removal procedure for brake hose and pipe installation procedure.
   For installation, make sure that steering wheel is in straightforward position and hose has no twist or kink. Check to make sure that hose doesn't contact any part of suspension, both in extreme right and extreme left turn conditions. If it does at any point, remove and correct. Fill and maintain brake fluid level in reservoir. Bleed brake system.
2) Perform brake test and check installed part for fluid leakage.

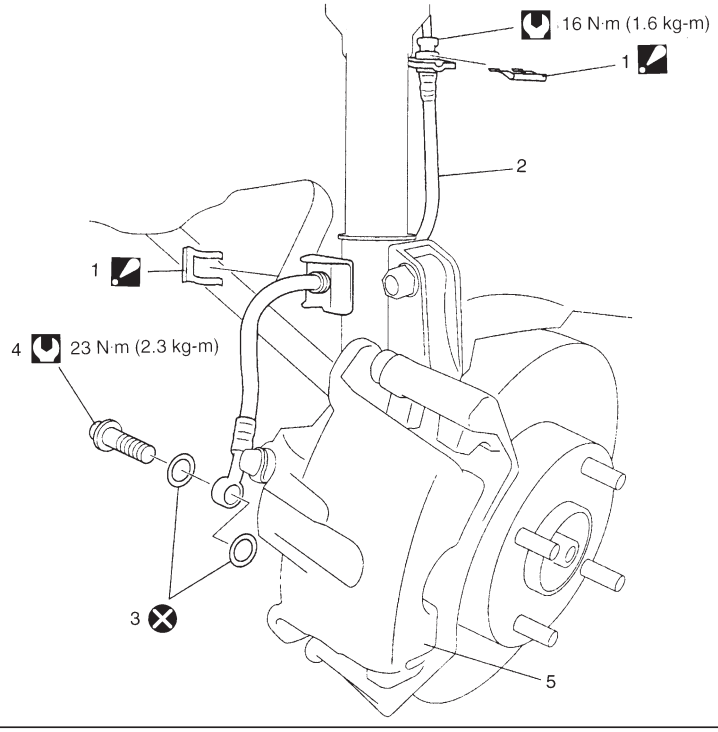

1. E-ring:
   Insert E-ring till its end surface is flush with or deeper than bracket end surface.
2. Flexible hose
3. Hose washer
4. Hose bolt
5. Brake caliper

: Tightening Torque
: Do not reuse

For vehicle with ABS

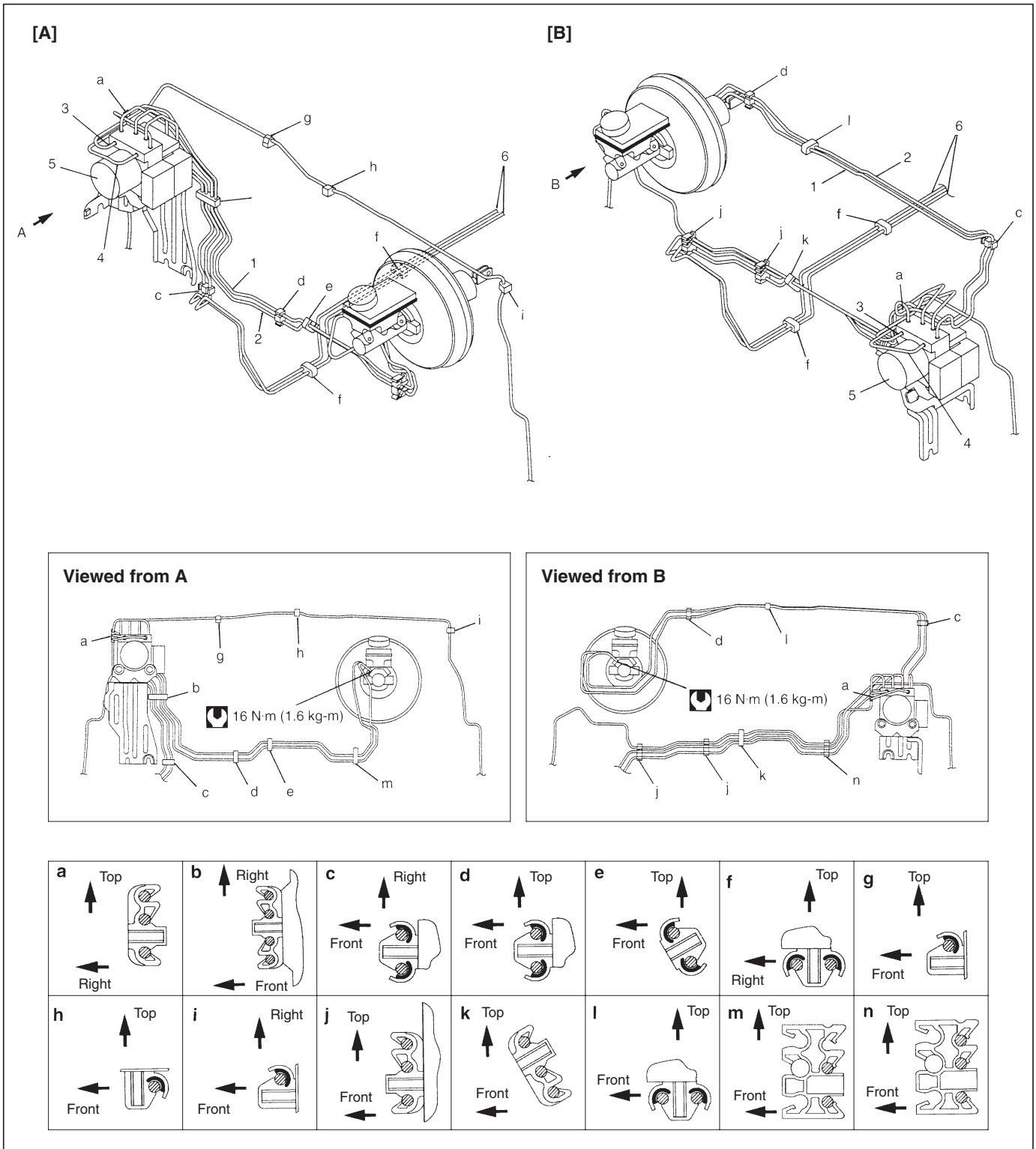

[A]: For left-hand steering vehicle
[B]: For right-hand steering vehicle
a – n: Clamp
1. From master cylinder primary to ABS hydraulic unit
2. From master cylinder secondary to ABS hydraulic unit
3. From ABS hydraulic unit to left front brake
4. From ABS hydraulic unit to right front brake
5. ABS hydraulic unit
6. To rear brakes

: Tightening Torque

For vehicle without ABS

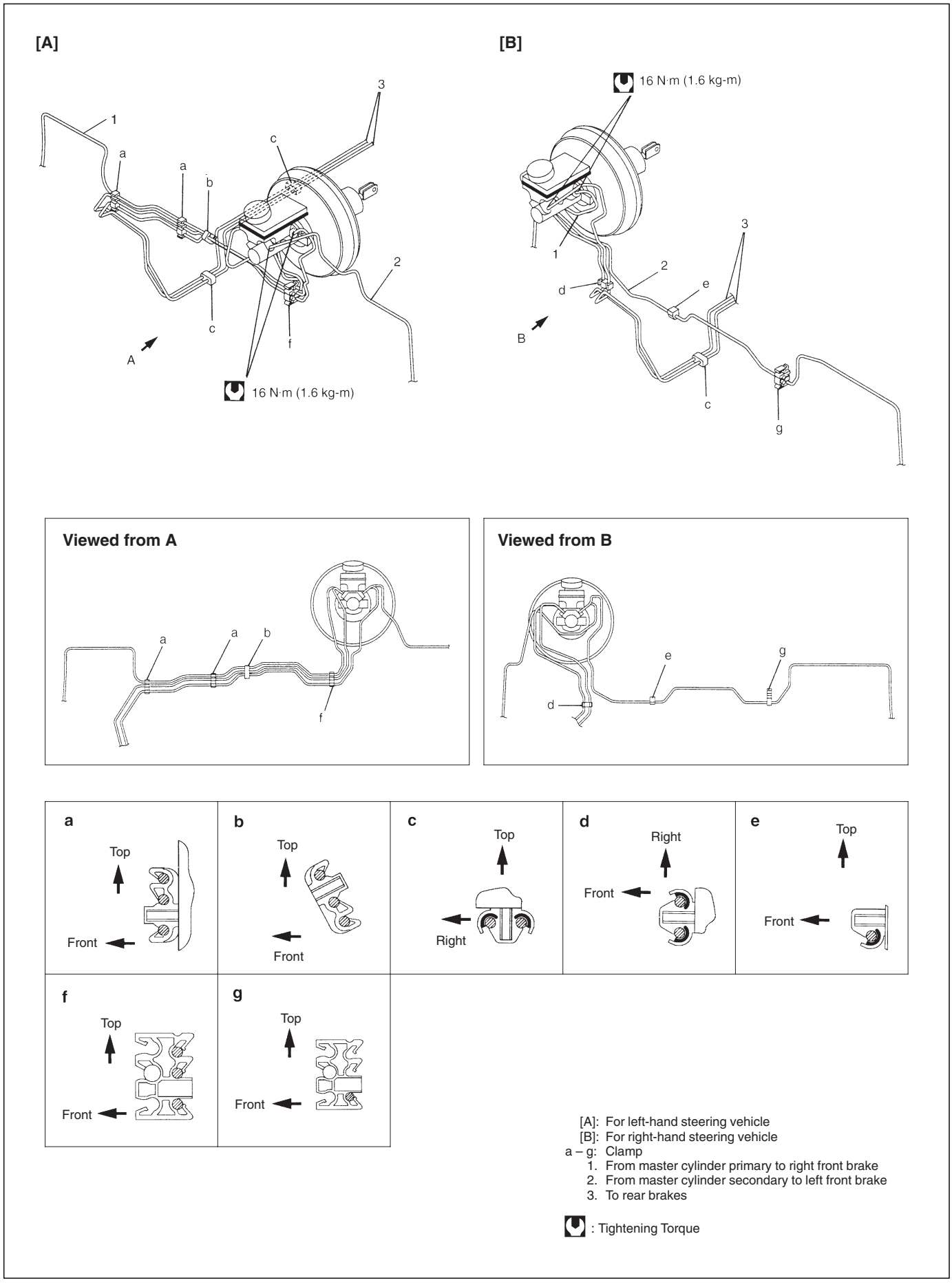

[A]: For left-hand steering vehicle
[B]: For right-hand steering vehicle
a – g: Clamp
1. From master cylinder primary to right front brake
2. From master cylinder secondary to left front brake
3. To rear brakes

: Tightening Torque

REAR BRAKE HOSE/PIPE

REMOVAL

1) Raise and suitably support vehicle. Remove tire and wheel.
2) Clean dirt and foreign material from both hose end or pipe end fittings. Remove brake hose or pipe.

INSTALLATION

1) Reverse removal procedure for brake hose or pipe installation procedure.
   - Install clamps properly referring to figure below.
   - When installing hose, make sure that it has no twist or kink.
2) Fill and maintain brake fluid level in reservoir. Bleed brake system.
3) Perform brake test and check each installed part for fluid leakage.

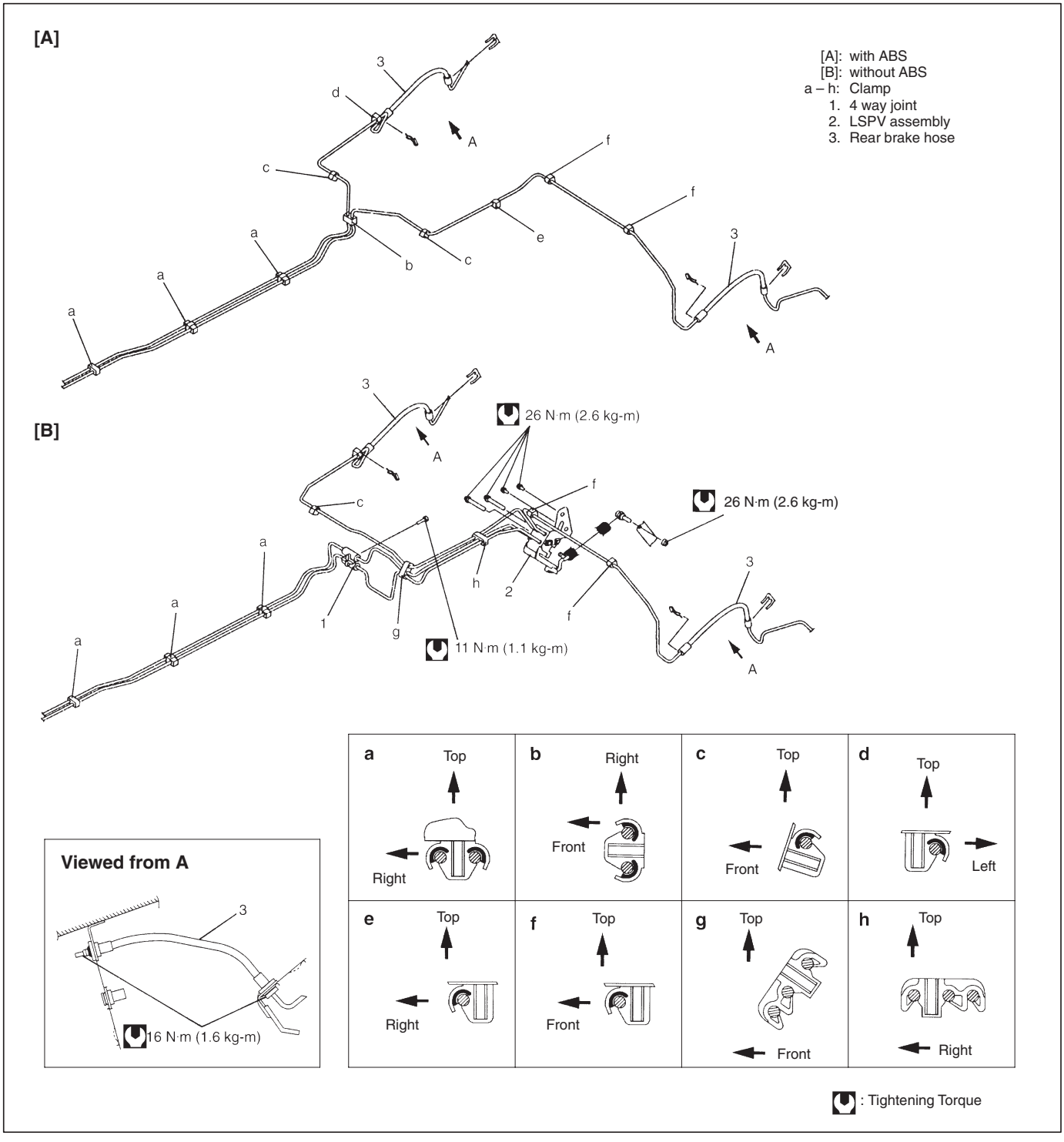

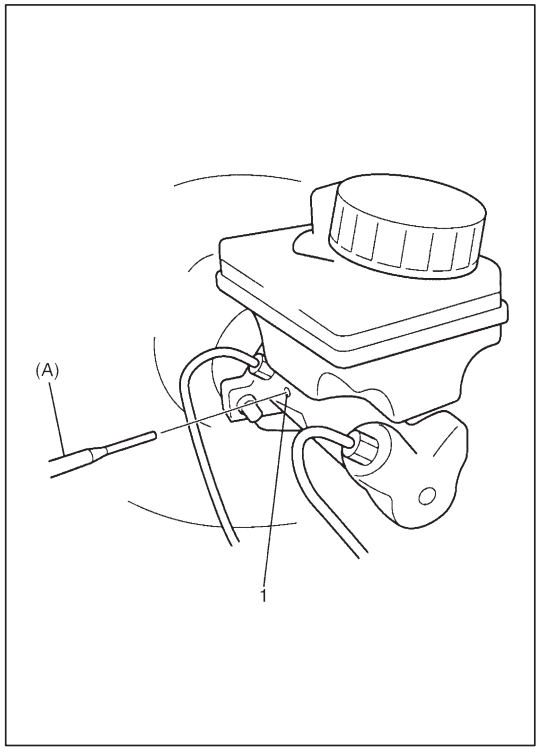

MASTER CYLINDER RESERVOIR

CAUTION:
Observe CAUTION at the beginning of ON-VEHICLE SERVICE.

NOTE:
For right hand steering vehicle, remove and install master cylinder reservoir according to procedure of MASTER CYLINDER ASSEMBLY REMOVAL and INSTALLATION in this section.

REMOVAL

1) Clean outside of reservoir.
2) Disconnect reservoir lead wire at coupler.
3) Take out fluid with syringe or such.
4) Remove reservoir connector pin (1) using special tool.

   Special Tool
   (A): 09922-85811

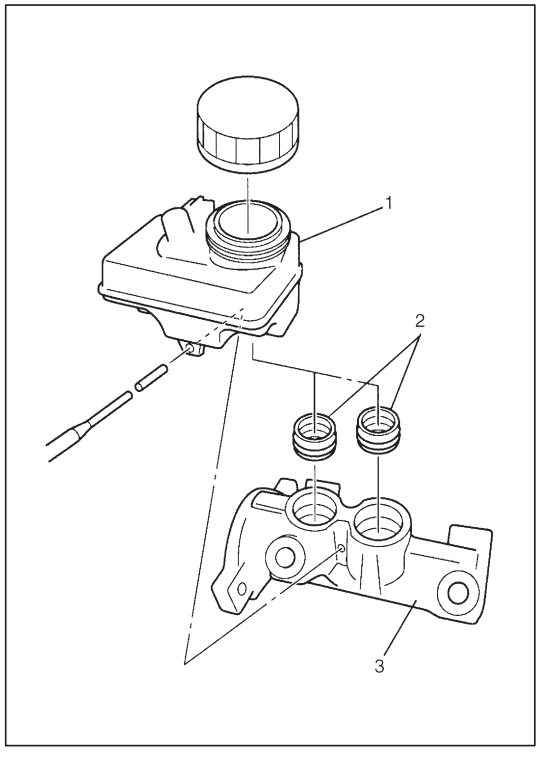

5) Remove reservoir (1) and grommets (2) from master cylinder (3).

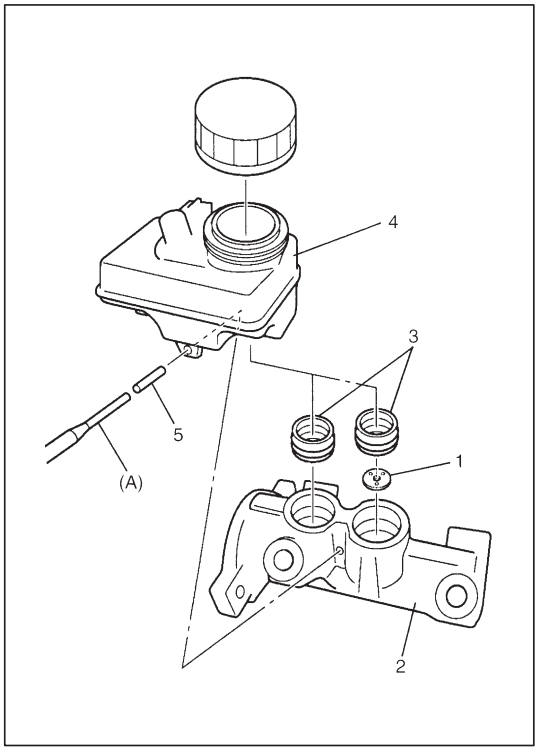

INSTALLATION

1) For vehicle with ABS, install pin washer retainer (1) to secondary reservoir port of master cylinder (2) if removed.
2) When using new grommets, lubricate them with the same fluid as the one to fill reservoir with. Then fit grommets (3) to master cylinder. Grommets must be seated in place.
3) Install reservoir (4) and drive in reservoir pin (5).
   Drive in reservoir pin till both of its ends at the right and left of reservoir becomes the same length.

   Special Tool
   (A): 09922-85811

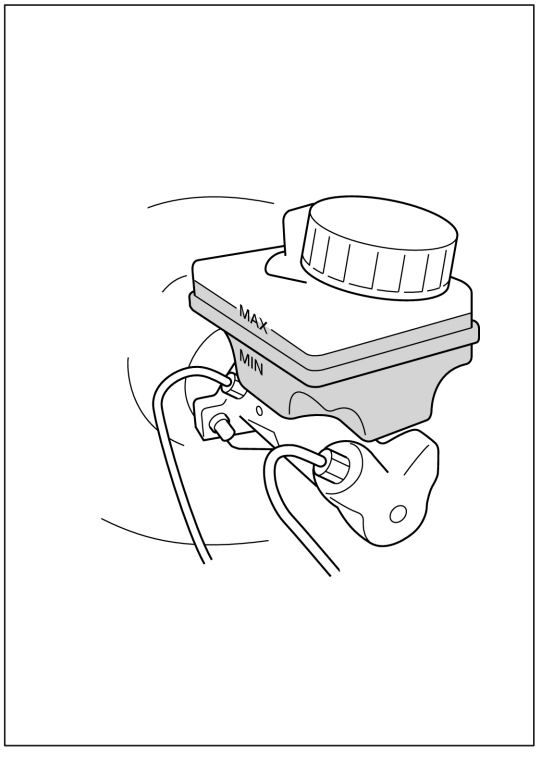

4) Connect reservoir lead wire.
5) Fill reservoir with specified fluid and bleed air from brake system.
6) Upon completion of installation, check for fluid leakage.

MASTER CYLINDER ASSEMBLY

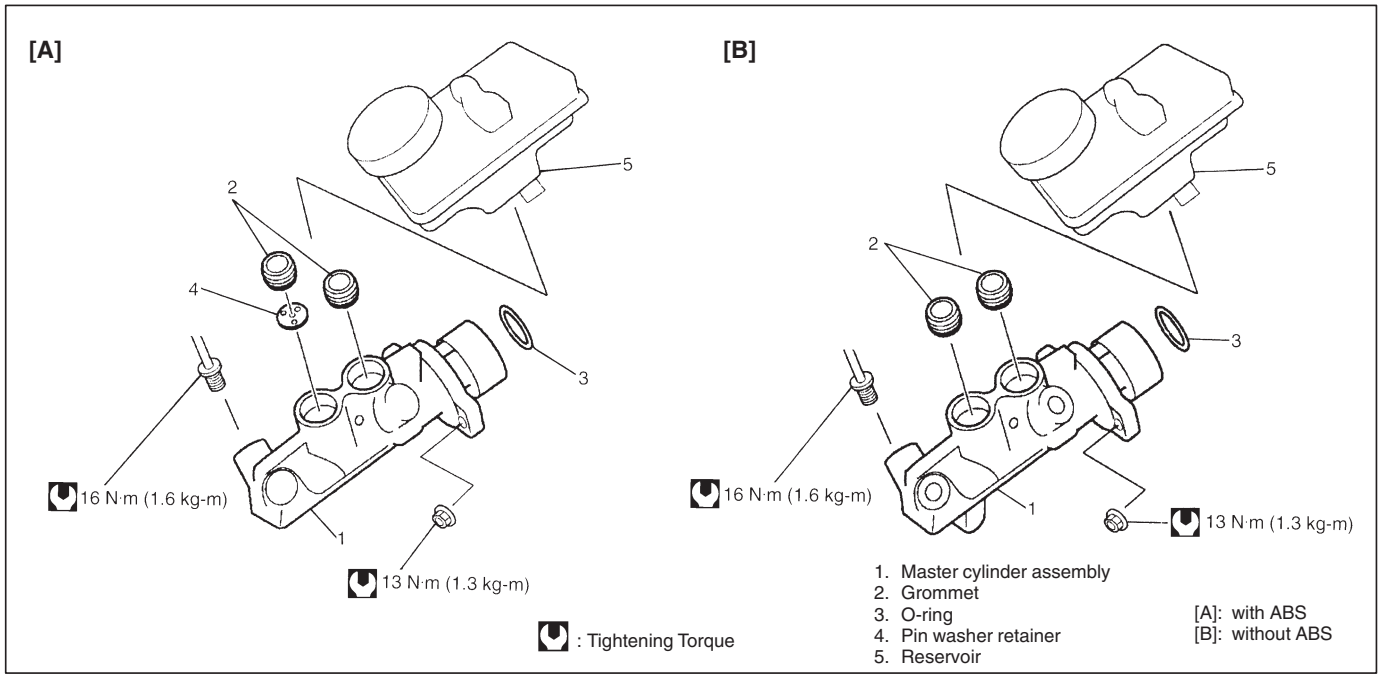

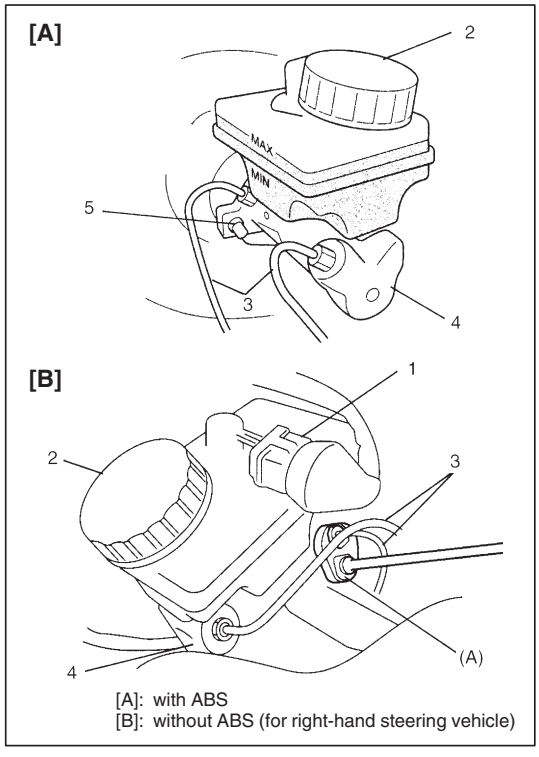

CAUTION:
- **Never disassemble master cylinder. Disassembly will spoil its original performance. If faulty condition is found, replace it with new one.**
- **Observe CAUTION at the beginning of ON-VEHICLE SERVICE.**

REMOVAL

1) Clean around master cylinder and reservoir.
2) Disconnect reservoir lead wire at coupler (1).
3) Remove reservoir cap (2) and take out fluid with syringe or such.
4) Disconnect brake pipes (3) from master cylinder (4).
   For RH steering vehicle not equipped with ABS, disconnect pipes from master cylinder by using special tool.

   Special Tool
   (A): 09950-78240

5) Remove master cylinder attaching nuts (5).

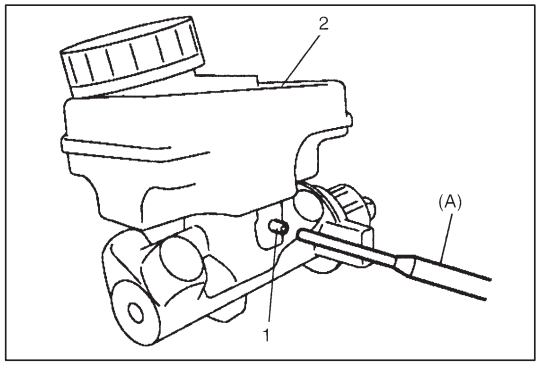

6) Remove master cylinder from brake booster.
7) Remove reservoir pin (1) and reservoir (2) by using special tool.

   Special Tool
   (A): 09922-85811

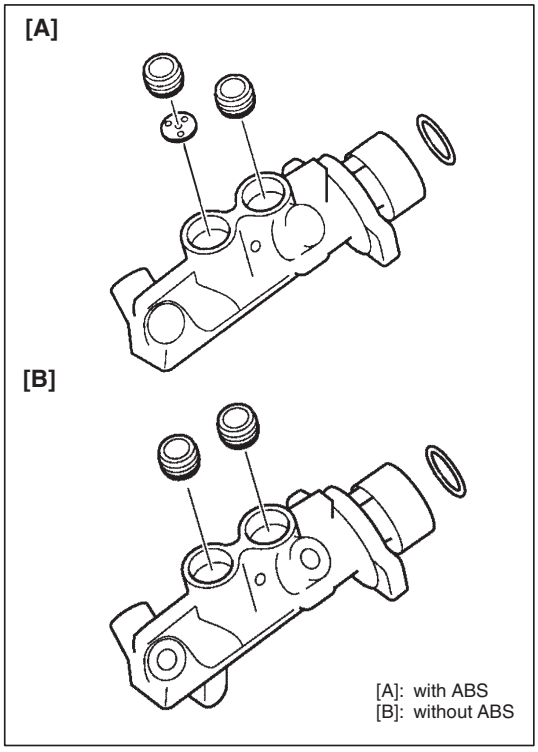

INSPECTION

Inspect each parts for wear, deterioration or damage, and replace parts if necessary.

Inspect master cylinder for scoring, corrosion and smooth operation. It is best to replace corroded cylinder.

Corrosion can be identified as pits or excessive roughness.

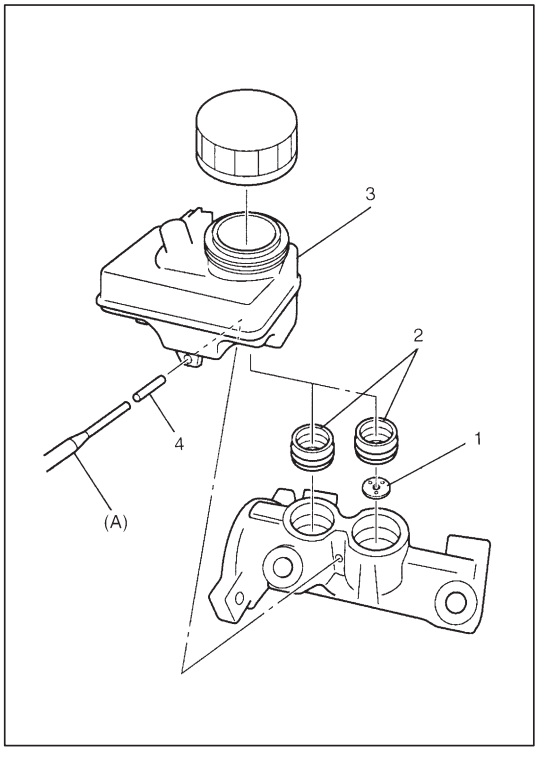

INSTALLATION

1) For vehicle with ABS, install pin washer retainer (1) if removed and apply thin coat of brake fluid to all around new grommets (2) and install them to cylinder body, then install reservoir (3).
2) Set a pin (4) in reservoir hole and drive it in till both of its ends at the right and left of reservoir becomes the same length.

Special Tool
(A): 09922-85811

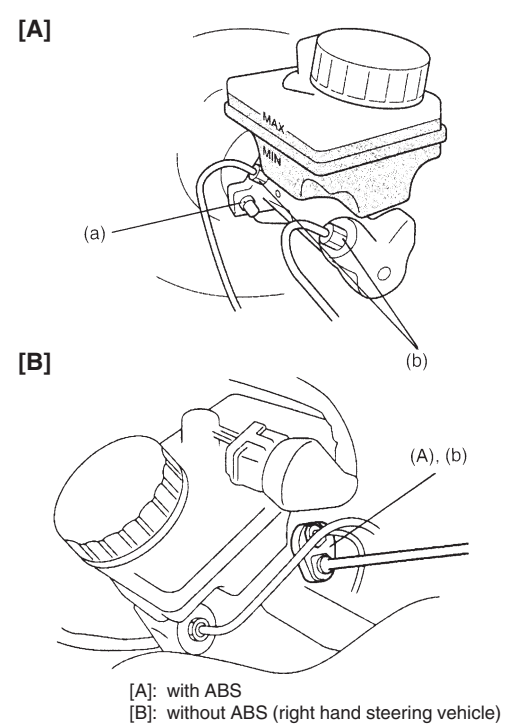

[A]: with ABS
[B]: without ABS (right hand steering vehicle)

3) Install master cylinder to brake booster.
4) Torque master cylinder attaching nuts to specification.

Tightening Torque
(a): 13 N·m (1.3 kg-m, 9.5 lb-ft)

5) Connect hydraulic lines and torque flare nuts to specification.

Special Tool
(A): 09950-78240

Tightening Torque
(b): 16 N·m (1.6 kg-m, 12.0 lb-ft)

6) Connect reservoir lead wire.
7) Fill reservoir with specified brake fluid.
8) After installing, check brake pedal play and bleed air from system (See SECTION 5).
9) Perform brake test and check each installed part for fluid leakage.

BRAKE BOOSTER

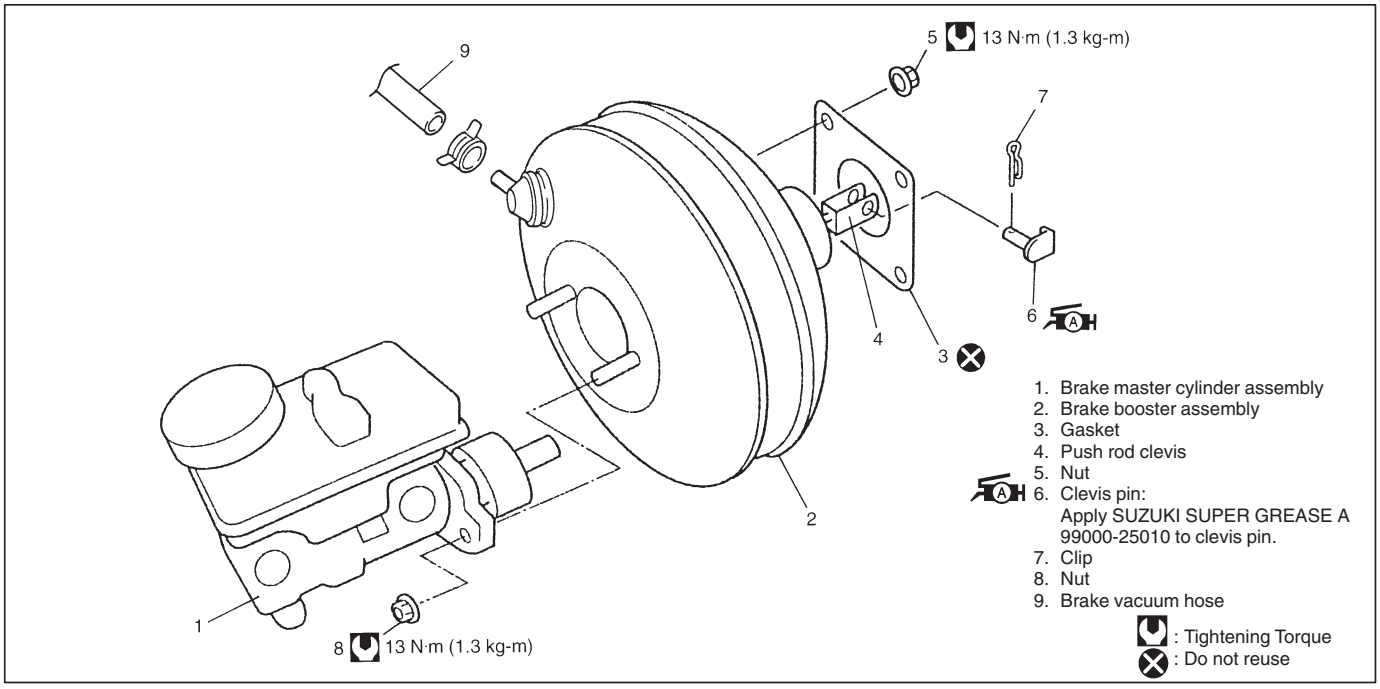

CAUTION:
- **Never disassemble brake booster. Disassembly will spoil its original function. If it is found faulty, replace it with new one.**
- **Observe CAUTION at the beginning of ON-VEHICLE SERVICE.**

REMOVAL

1) Remove master cylinder assembly, referring to steps 1) to 5) of its REMOVAL in this section.
2) Disconnect brake vacuum hose from brake booster.
3) Disconnect push rod clevis (1) from brake pedal arm (2).
4) Remove attaching nuts (3) and then booster.

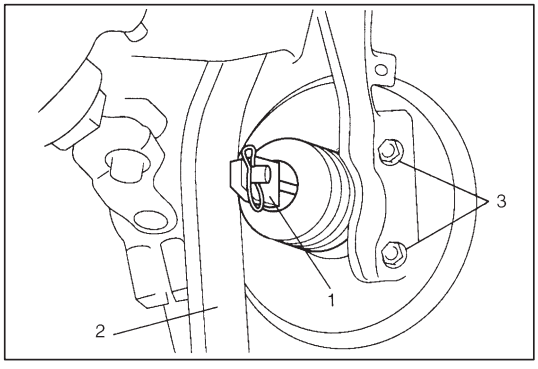

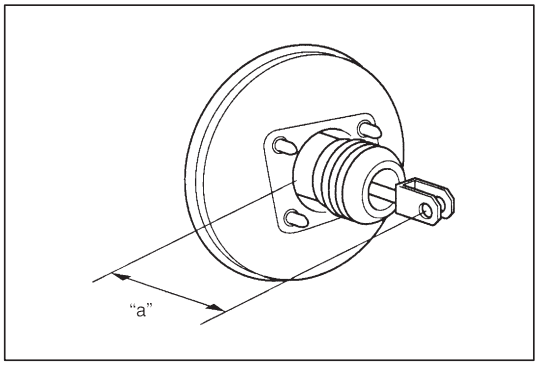

INSPECTION

- Check brake booster for damage and operation, boot for damage and deterioration.
- Check for push rod length.

Length
"a": 114.5 – 115.5 mm (4.51 – 4.55 in.)

If any malfunction is found, replace brake booster.

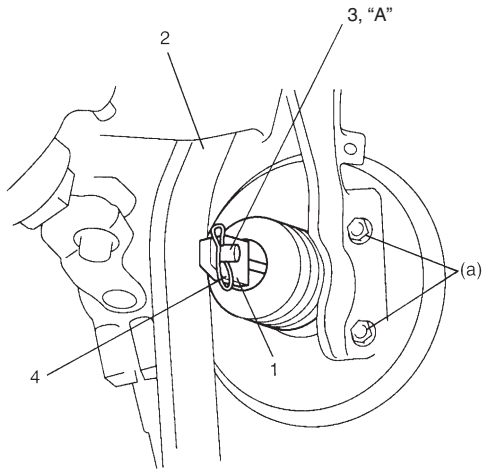

INSTALLATION

NOTE:

Check for push rod length referring to above BRAKE BOOSTER INSPECTION.

1) Install new gasket and booster to dash panel as shown. Then connect booster push rod clevis (1) to pedal arm (2) with clevis pin (3) and clip (4).

   “A”: Grease A 99000-25010

2) Tighten booster attaching nuts to the specified torque.

   Tightening Torque
   (a): 13 N·m (1.3 kg-m, 9.5 lb-ft)

3) Connect brake vacuum hose to brake booster.
4) Install master cylinder, referring to steps 3) to 8) of its INSTALLATION of this section.
5) After installing, perform BOOSTER OPERATION CHECK referring to SECTION 5.

LSPV (Load Sensing Proportioning Valve) ASSEMBLY (if equipped)

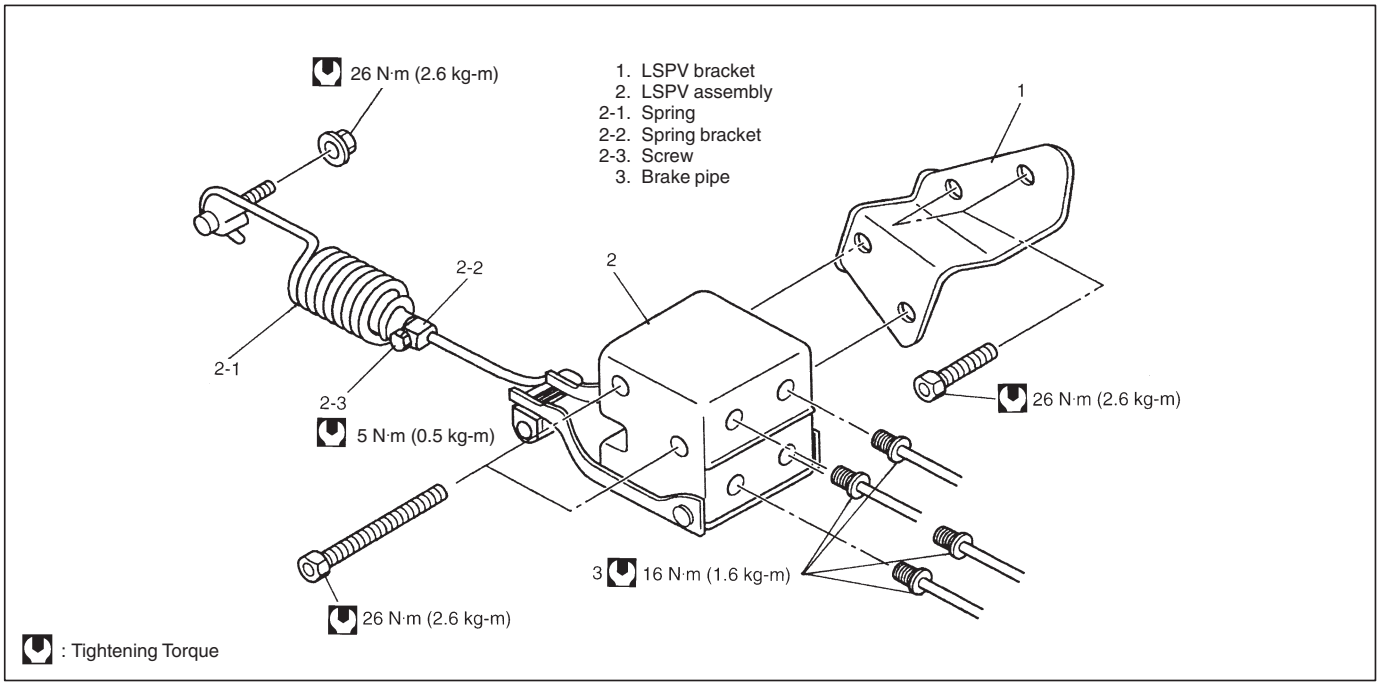

CAUTION:
- **Never disassemble LSPV assembly. Disassembly will spoil its original performance. Replace with new one if defective.**
- **Observe CAUTION at the beginning of ON-VEHICLE SERVICE.**

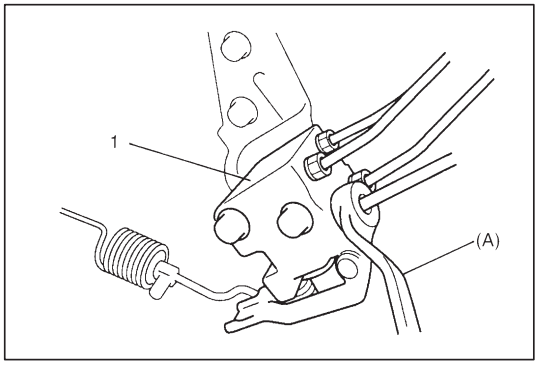

REMOVAL

1) Clean around reservoir cap and take out fluid with syringe or such.
2) Hoist vehicle.
3) Disconnect brake pipes from LSPV assembly (1).

Special Tool
(A): 09950-78230 (10 x 11 mm)

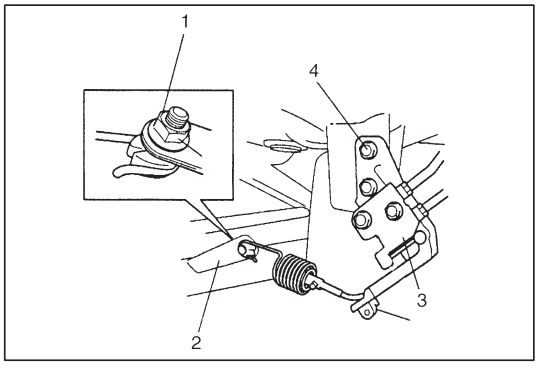

4) Remove nut (1) and detach spring end from rear axle (2).
5) Remove LSPV assembly (3) with bracket (4) from vehicle body.

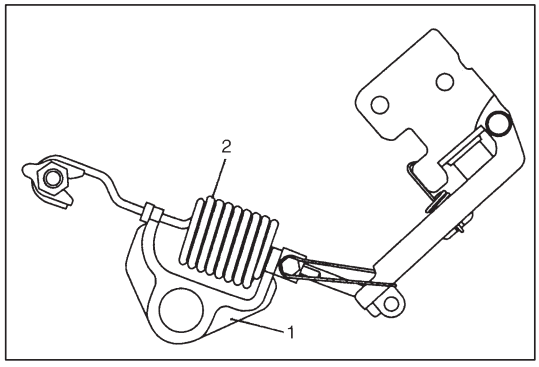

INSTALLATION

NOTE:

New LSPV assembly is supplied with held in specified spring length with adjusting block (1).

Do not remove adjusting block until spring (2) installation position is adjusted.

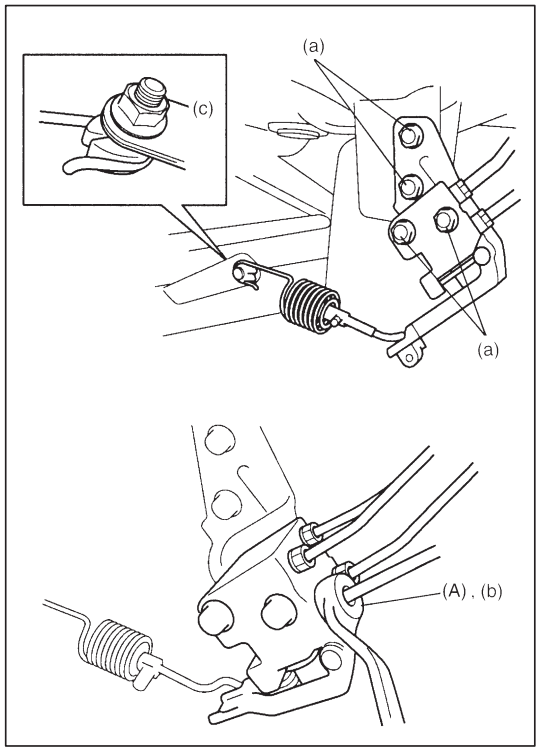

1) Install LSPV assembly with bracket to vehicle body.
2) Torque each bolt and nut to specification as indicated respectively in figure.

   Special Tool
   (A): 09950-78230 (10 x 11 mm)

   Tightening Torque
   (a): 26 N·m (2.6 kg-m, 19.0 lb-ft)
   (b): 16 N·m (1.6 kg-m, 11.5 lb-ft) (brake flare nut)
   (c): 26 N·m (2.6 kg-m, 19.0 lb-ft)

3) Fill reservoir with specified fluid and bleed air from brake system.

4) Check or adjust spring installation position.
   For used LSPV assembly, check that it is installed properly referring to the following INSPECTION & ADJUSTMENT.
   For new LSPV assembly, adjust spring installation position as follows.
   a) Confirm the following before adjustment.
      - Fuel level meter indicates around “E” (Empty). (Fuel tank holds about 5 liters.)
      - Vehicle is equipped with spare tire, tools, jack and jack handle.
      - Vehicle is free from any other load.
      - Vehicle is placed on level floor.

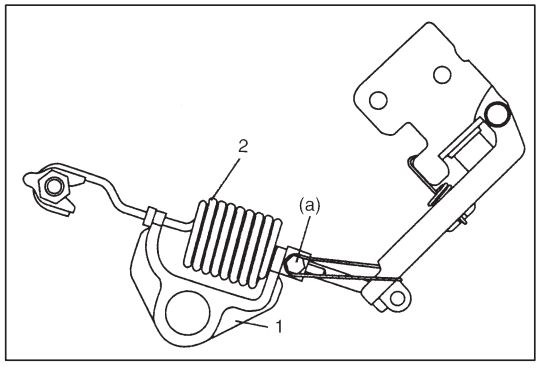

   b) Tighten spring bracket bolt to specified torque.

      Tightening Torque
      (a): 5 N·m (0.5 kg-m, 4.0 lb-ft)

   c) Remove adjusting block (1) from spring (2).
   d) Confirm fluid pressure refferring to Fluid Pressure Test in SECTION 5.

INSPECTION & ADJUSTMENT

1) Confirm the following before inspection and adjustment.
   - Fuel tank is filled with fuel fully.
   - Vehicle is equipped with spare tire, tools, jack and jack handle.
   - Vehicle is free from any other load.
   - Vehicle is placed on level floor.

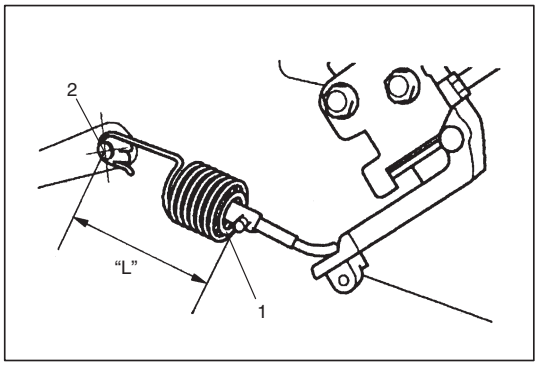

2) Check spring length between spring end (1) and spring bolt center (2).

   Spring length
   "L": About 99.3 mm (3.9 in.)

   If it is out of specification, adjust it as follows.

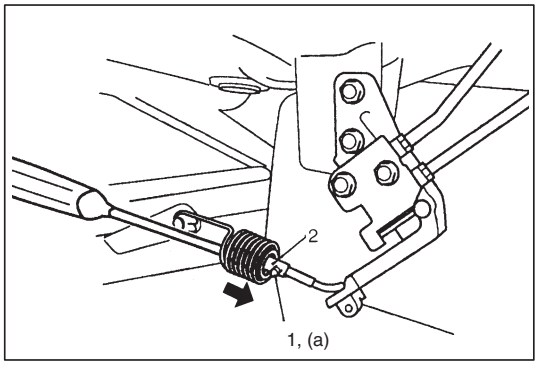

3) Loosen spring bracket bolt (1) and stretch spring to specified length by pushing spring bracket (2) with a driver or the like.
4) At that position in step 3), tighten spring bracket bolt to specified torque.

   Tightening Torque
   (a): 5 N·m (0.5 kg-m, 4.0 lb-ft)

5) Confirm fluid pressure referring to Fluid Pressure Test in SECTION 5.

BRAKE PEDAL AND BRAKE PEDAL BRACKET

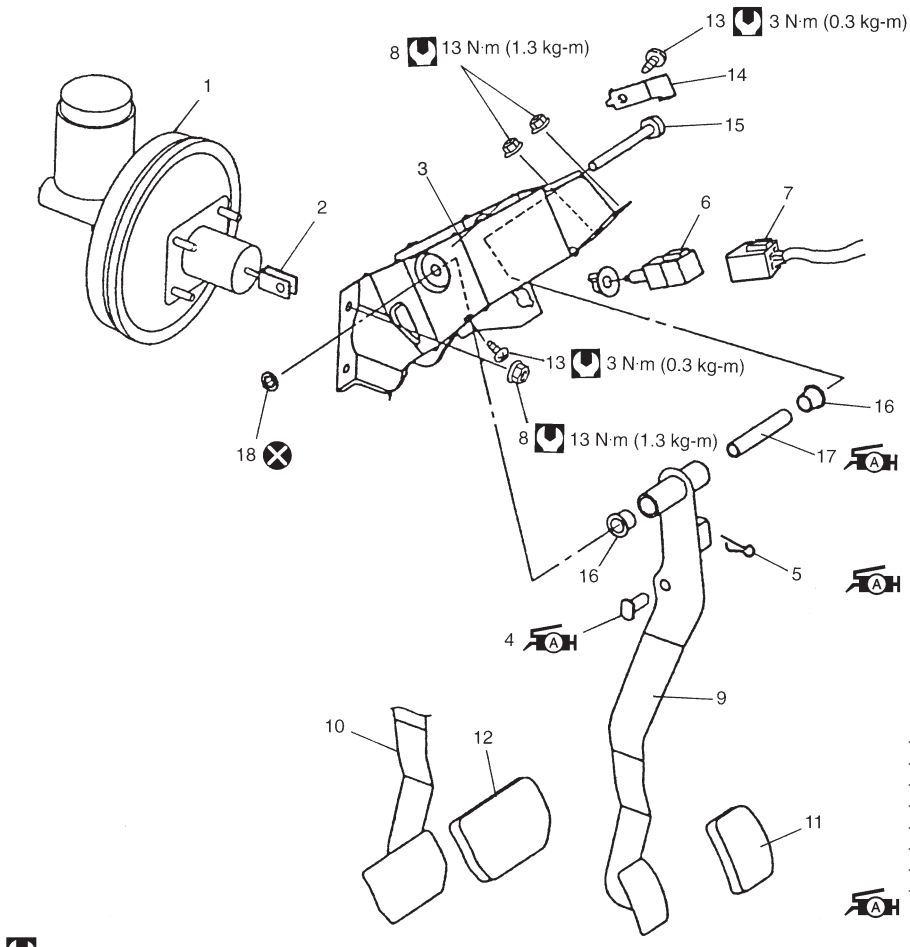

1. Brake booster assembly
2. Push rod clevis
3. Brake pedal bracket
4. Clevis pin:
   Apply SUZUKI SUPER GREASE A 99000-25010 to clevis pin.
5. Clip
6. Stop light switch
7. Stop light switch coupler
8. Nut
9. Brake pedal (for M/T model)
10. Brake pedal (for A/T model)
11. Pedal pad (for M/T model)
12. Pedal pad (for A/T model)
13. Screw
14. Pedal shaft stopper
15. Pedal shaft
16. Pedal bush
17. Pedal shaft spacer:
    Apply SUZUKI SUPER GREASE A 99000-25010 to outside surface of spacer.
18. Pedal shaft nut

: Tightening Torque
: Do not reuse

REMOVAL

1) Disconnect stop light switch coupler.
2) Disconnect push rod clevis from brake pedal.
3) Remove attaching nuts.
4) Remove brake pedal bracket with brake pedal.
5) Remove each parts, if necessary.

INSTALLATION

Reverse removal procedure for installation, noting the following.

- Tighten each nuts and screws to specified torque as indicated above figure.
- After installing, check brake pedal play and perform brake test.

REQUIRED SERVICE MATERIAL

MATERIALS	RECOMMENDED PRODUCT	USE
Brake fluid	DOT 4 or SAE J1704	● To fill master cylinder reservoir. ● To clean and apply to inner parts of caliper and wheel cylinder when they are disassembled.

SPECIAL TOOLS

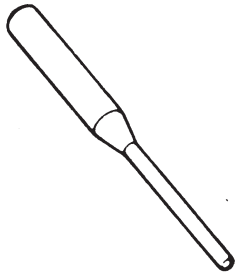	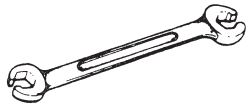	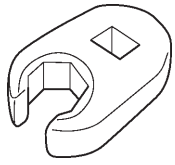
09922-85811 Connector pin remover	09950-78230 Flare nut wrench (10 x 11 mm)	09950-78240 Flare nut socket (10 mm)

SECTION 5B

FRONT BRAKE

NOTE:
All brake fasteners are important attaching parts in that they could affect the performance of vital parts and systems, and/or could result in major repair expense. They must be replaced with one of same part number or with an equivalent part if replacement becomes necessary. Do not use a replacement part of lesser quality or substitute design. Torque values must be used as specified during reassembly to assure proper retention of all parts. There is to be no welding as it may result in extensive damage and weakening of the metal.

CONTENTS

GENERAL DESCRIPTION

DISC BRAKE CALIPER ASSEMBLY

This caliper is mounted to the brake caliper carrier with two caliper pin bolts. Hydraulic force, created by applying force to the brake pedal, is converted by the caliper to friction. The hydraulic force acts equally against the piston and the bottom of the caliper bore to move the piston outward and to move (slide) the caliper inward, resulting in a clamping action on the disc. This clamping action forces the pads (linings) against the disc, creating friction to stop the vehicle.

DIAGNOSIS

Refer to Section 5 (BRAKES).

CHECK AND ADJUSTMENT

Refer to Section 5 (BRAKES).

ON-VEHICLE SERVICE

CAUTION:
Lubricate parts as specified. Do not use lubricated shop air on brake parts as damage to rubber components may result. If any component is removed or line disconnected, bleed the brake system. Replace pads in axle sets only. The torque values specified are for dry, unlubricated fasteners.

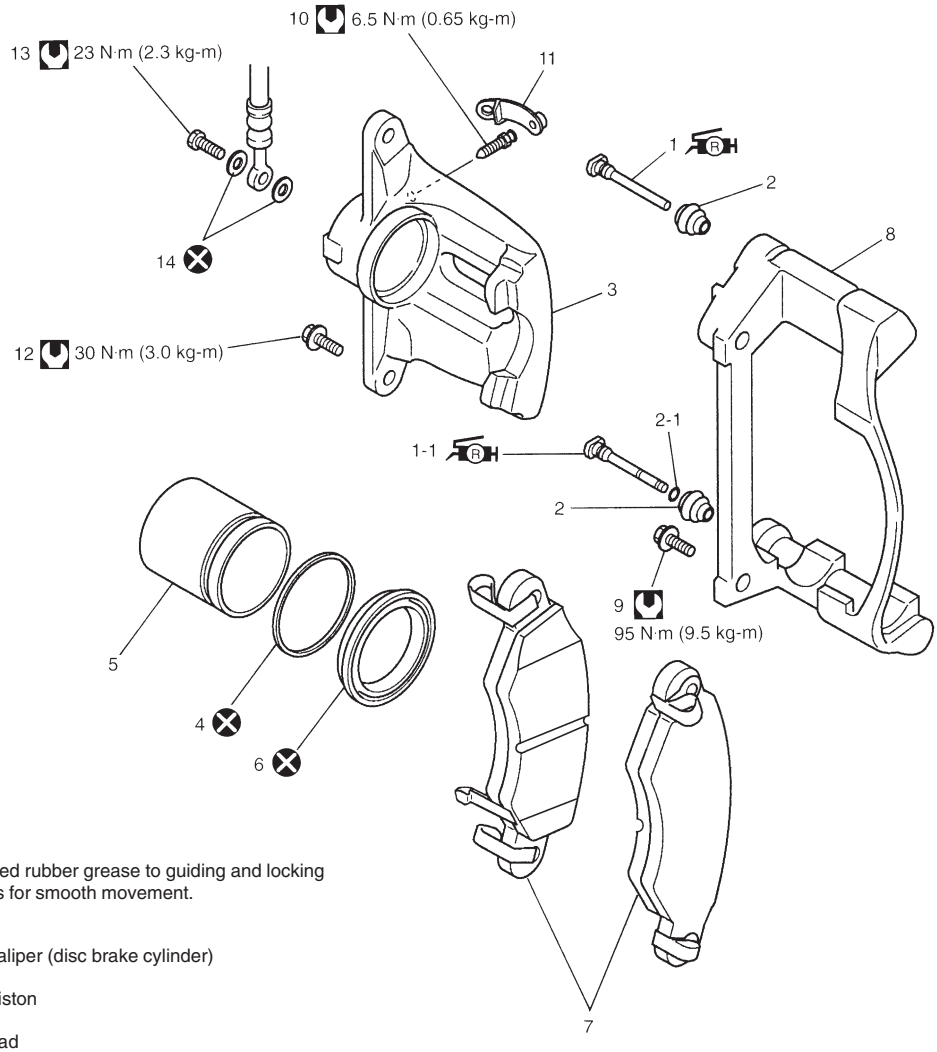

1. Guiding pin:
1-1. Locking pin:
Apply specified rubber grease to guiding and locking pins surfaces for smooth movement.
2. Pin boot
2-1. O-ring
3. Disc brake caliper (disc brake cylinder)
4. Piston seal
5. Disc brake piston
6. Piston boot
7. Disc brake pad
8. Brake caliper carrier
9. Caliper bolt
10. Bleeder plug
11. Bleeder plug cap
12. Caliper pin bolt
13. Flexible hose bolt
14. Gasket

: Tightening Torque
: Do not reuse

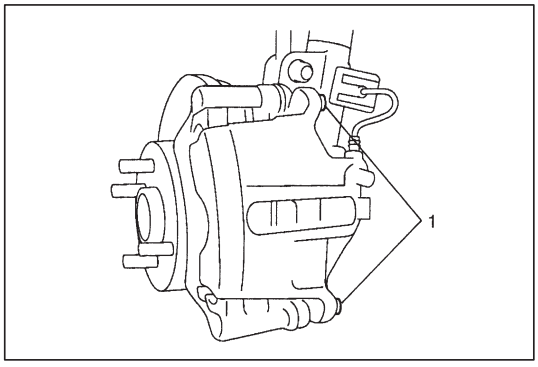

FRONT DISC BRAKE PAD

REMOVAL

1) Hoist vehicle and remove wheel.
2) Remove caliper pin bolts (1).

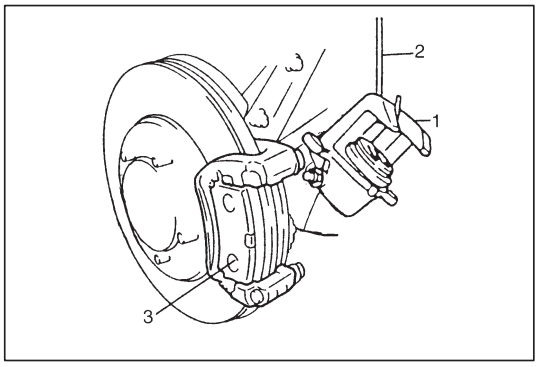

3) Remove E-ring from strut and then remove caliper (1) from caliper carrier.

   NOTE:
   Hang removed caliper with a wire hook (2) or the like so as to prevent brake hose from bending and twisting excessively or being pulled. Don't operate brake pedal with pads removed.

4) Remove pads (3).

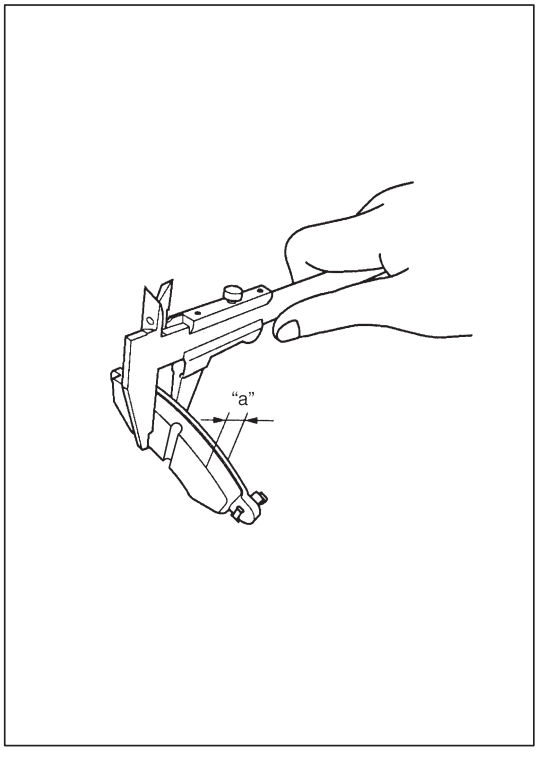

INSPECTION

Brake Pad

Check pad lining for wear. When wear exceeds limit, replace with new one.

CAUTION:
Never polish pad lining with sandpaper. If lining is polished with sandpaper, hard particles of sandpaper will be deposited in lining and may damage disc. When pad lining requires correction, replace it with a new one.

Pad thickness (lining + rim) "a"
Standard : 15.3 mm (0.60 in.)
Service limit : 8.2 mm (0.32 in.)

NOTE:
When pads are removed, visually inspect caliper for brake fluid leak. Correct leaky point, if any.

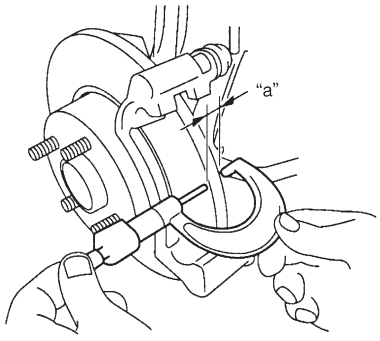

Brake Disc

Check disc surface for scratches in wearing parts. Scratches on disc surface noticed at the time of specified inspection or replacement are normal and disc is not defective unless they are serious. But when there are deep scratches or scratches all over disc surface, replace it. When only one side is scratched, polish and correct that side.

Disc thickness "a"
Standard : 12.0 mm (0.47 in.)
Service limit : 10.0 mm (0.39 in.)

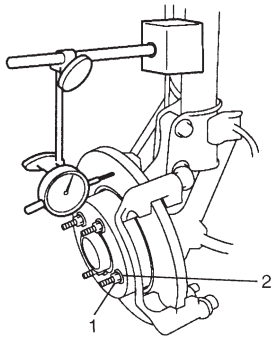

Use wheel nuts (1) and suitable plain washers (2) to hold the disc securely against the hub, then mount a dial indicator as shown and measure the runout at 20 mm (0.79 in.) from the outer edge of the disc.

Limit on disc deflection: 0.15 mm (0.006 in.)

NOTE:
Check front wheel bearing for looseness before measurement.

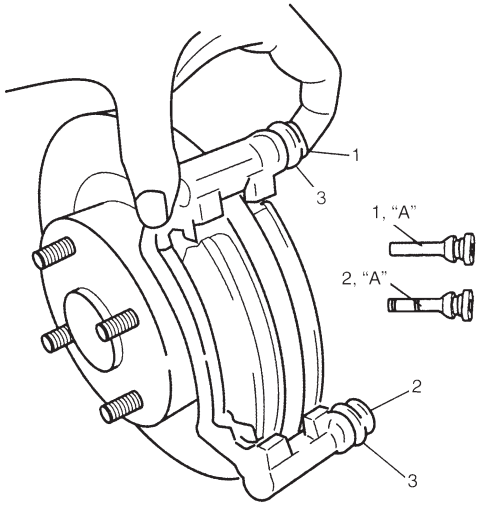

Cylinder Slide Guiding and Locking Pins

Check guiding pin (1) and locking pin (2) for smooth movement as shown.
If it is found faulty, correct or replace. Apply rubber grease to guiding and locking pins outer surface. Rubber grease should be the on whose viscosity is less affected by such low temperature a –40°C (–40°F).

"A": Rubber grease

Locking pin (2) has grooves and O-ring but guiding pin (1) has no groove. Install guiding pin into pin hole of carrier upper side.

Dust Boot

Check boot (3) for breakage, crack and damage. If defective, replace.

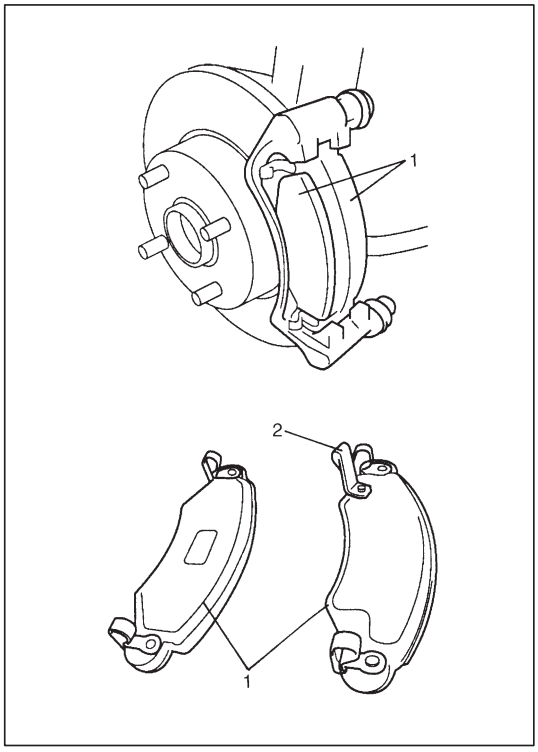

INSTALLATION

CAUTION:
Observe CAUTION at the beginning of ON-VEHICLE SERVICE.

1) Install pads (1).

NOTE:
Install pad with sensor (2) to vehicle center side.

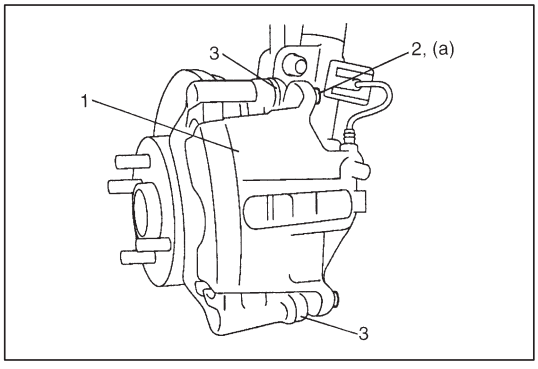

2) Install caliper (1) and torque caliper pin bolts (2) to specification.

Tightening Torque
(a): 30 N·m (3.0 kg-m, 22.0 lb-ft)

NOTE:
Make sure that boots (3) are fit into groove securely.

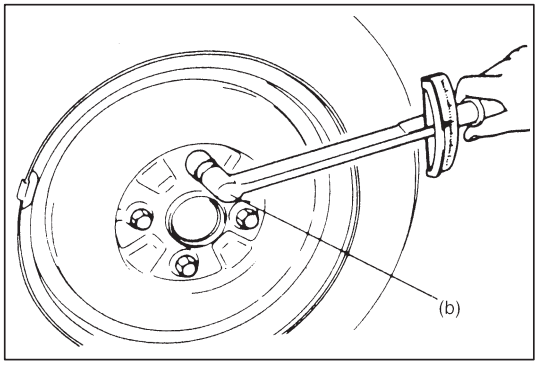

3) Torque front wheel nuts to specification.

Tightening Torque
(b): 85 N·m (8.5 kg-m, 61.5 lb-ft)

4) Upon completion of installation, perform brake test.

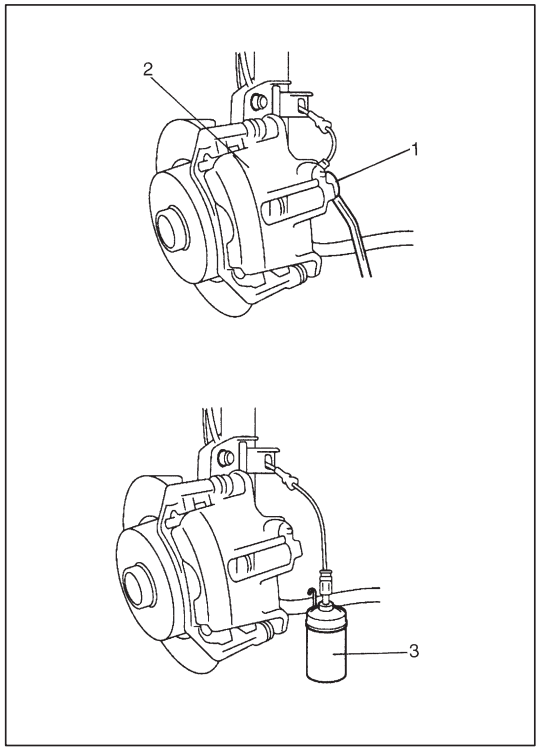

FRONT DISC BRAKE CALIPER

REMOVAL

1) Hoist vehicle and remove wheel.
2) Remove brake flexible hose bolt (1) from caliper (2). As this will allow fluid to flow out of hose, have a container (3) ready beforehand.

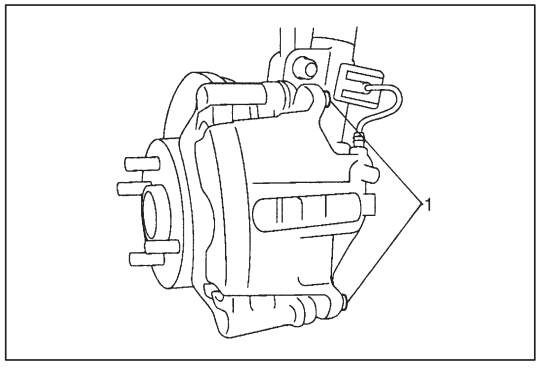

3) Remove caliper pin bolts (1).
4) Remove caliper.

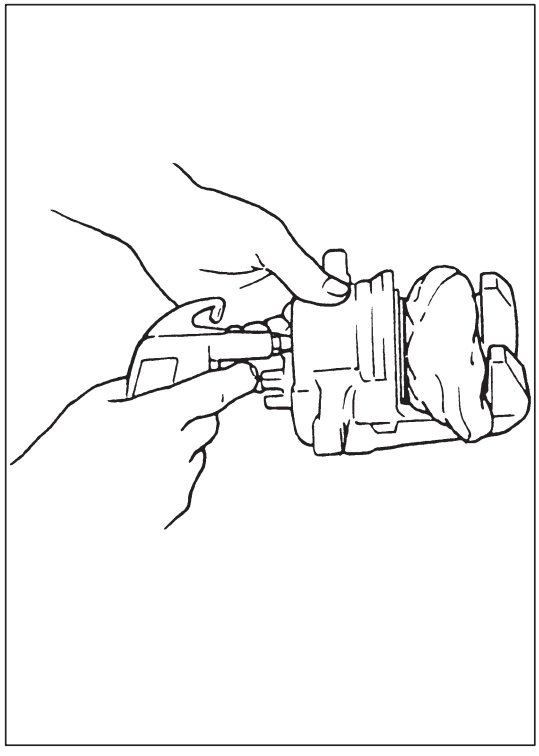

DISASSEMBLY

WARNING:
Do not apply too much highly compressed air which will cause piston to jump out of cylinder. It should be taken out gradually with moderately compressed air. Do not place your fingers in front of piston when using compressed air.

Before disassembly, clean all around caliper with brake fluid.

1) Blow compressed air into cylinder through bolt hole where flexible hose was fitted.
   With this air pressure, piston can be pushed out of cylinder.

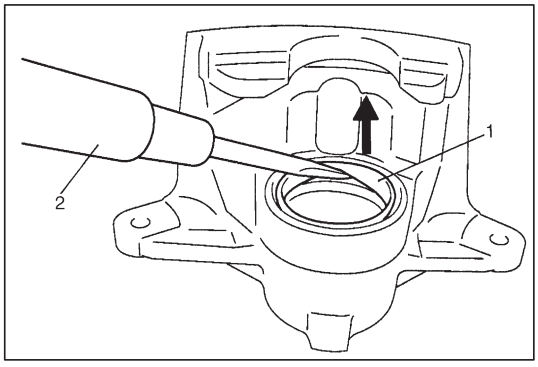

2) Remove piston boot (1) prying it with a metal tool (2) (no sharp edge).

CAUTION:
Be careful not to damage inside (bore side) of cylinder.

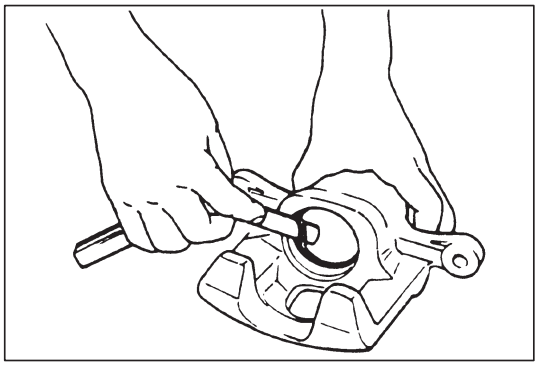

3) Remove piston seal using a thin blade like a thickness gauge, etc.

CAUTION:
Be careful not to damage inside (bore side) of cylinder.

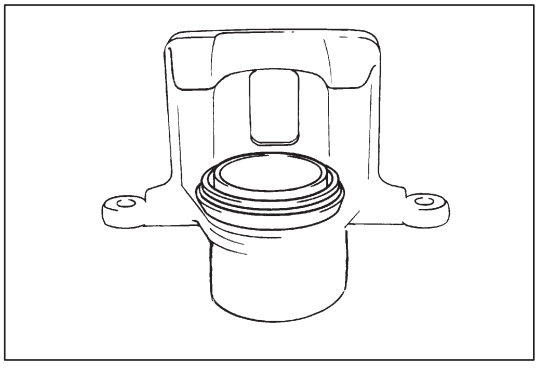

INSPECTION

Piston Boot

Check boot for breakage, crack and damage. If defective, replace.

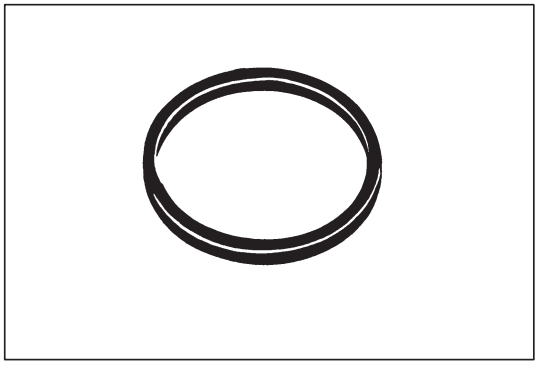

Piston Seal

Excessive or uneven wear of pad lining may indicate unsmooth return of the piston. In such a case, replace rubber seal.

ASSEMBLY

Reassemble front brake in reverse order of disassembly, noting the following points.

CAUTION:
- **Wash each part cleanly before installation in the same fluid as the one used in master cylinder reservoir.**
- **Never use other fluid or thinner.**
- **Before installing piston and piston seal to cylinder, apply fluid to them.**
- **After reassembling brake lines, bleed air from them.**

Piston Seal

Piston seal is used to seal piston and cylinder and to adjust clearance between pad and disc. Replace with a new one at every overhaul. Fit piston seal into groove in cylinder taking care not to twist it.

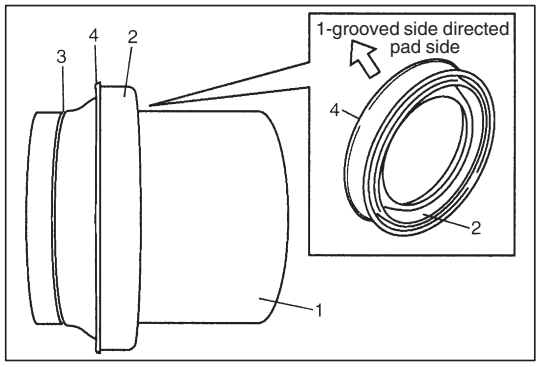

Piston and Boot

1) Fit new boot (2) in groove (3) of piston (1) facing stepped end (4) of boot to groove side.

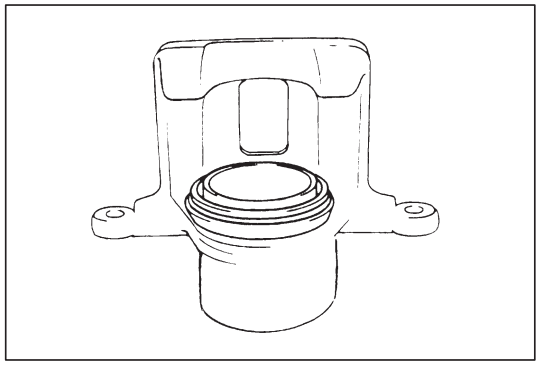

2) Insert piston into cylinder by hand.

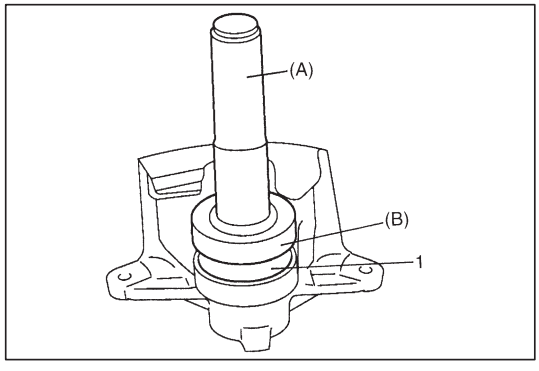

3) Drive in boot (1) into cylinder till its end surface becomes flush with cylinder end surface using special tools.

Special Tool
(A): 09924-74510
(B): 09944-88210

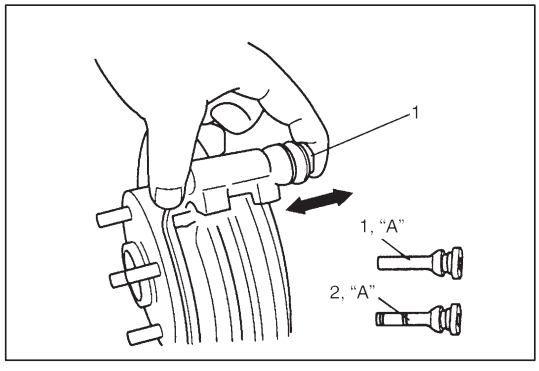

Caliper

Before installing caliper (cylinder body) to carrier, check to ensure that guiding pin (1) and locking pin (2) inserted in each caliper carrier hole can be moved smoothly in thrust direction.

NOTE:
Use rubber grease whose viscosity varies very little even at –40°C (–40°F) if applied.

"A": Rubber grease

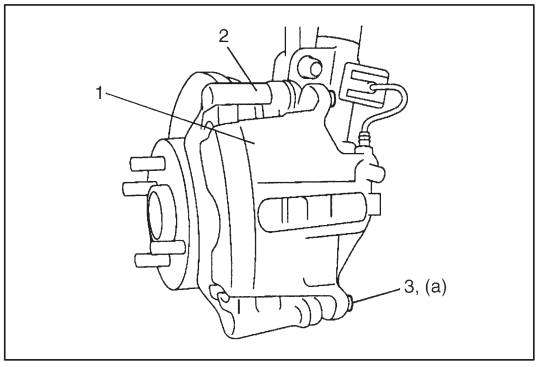

INSTALLATION

CAUTION:
Observe CAUTION at the beginning of ON-VEHICLE SERVICE.

1) Install caliper (1) to caliper carrier (2).
2) Torque caliper pin bolts (3) to specifications.

   Tightening Torque
   (a): 30 N·m (3.0 kg-m, 22.0 lb-ft)

   NOTE:
   Make sure that boots are fit into groove securely.

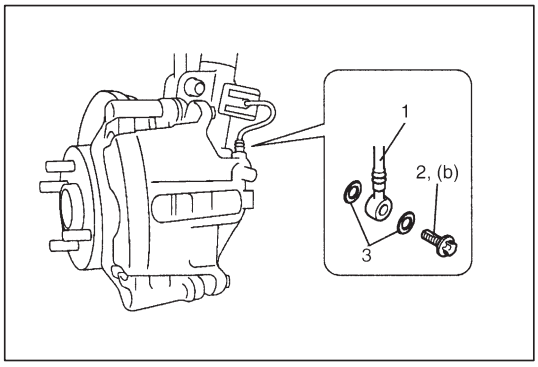

3) Install brake flexible hose (1) and new gaskets (3) as shown and torque hose bolt (2) to specification.

   Tightening Torque
   (b): 23 N·m (2.3 kg-m, 17.0 lb-ft)

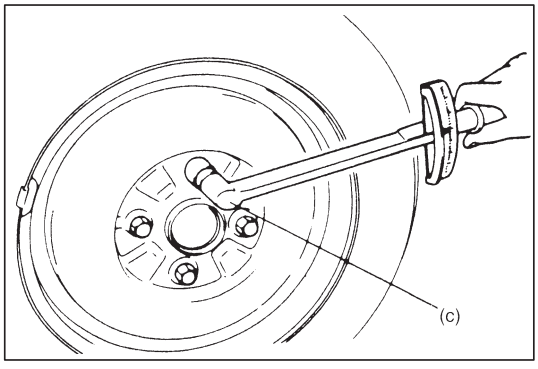

4) Torque wheel nuts to specification.

   Tightening Torque
   (c): 85 N·m (8.5 kg-m, 61.5 lb-ft)

5) After completing installation, fill reservoir with brake fluid and bleed brake system. Perform brake test and check each installed part for oil leakage.

FRONT BRAKE DISC

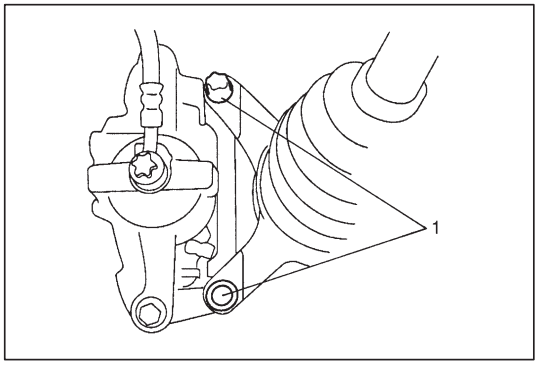

CAUTION:
During removal, be careful not to damage brake flexible hose and not to depress brake pedal.

REMOVAL

1) Hoist vehicle and remove wheel.
2) Remove caliper assembly by loosening carrier bolts (1).

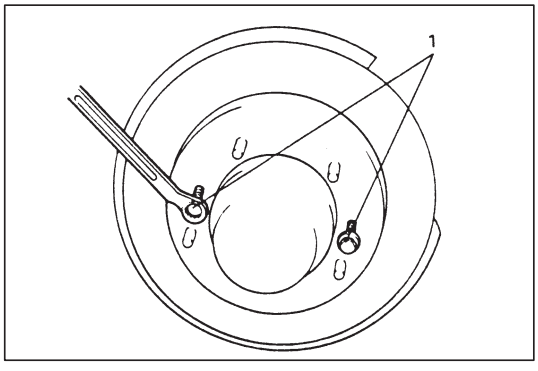

3) Remove disc by using 8 mm bolts (1) (2 pcs).

INSPECTION

Refer to FRONT DISC BRAKE PAD INSPECTION.

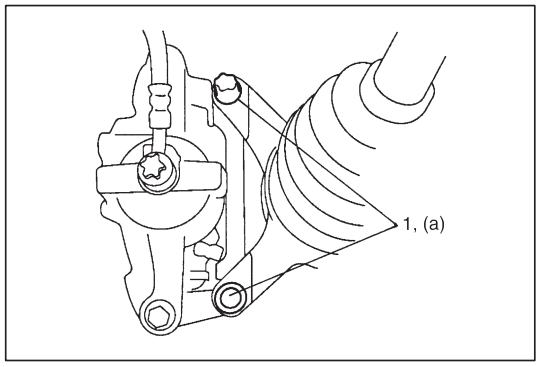

INSTALLATION

1) Install disc to wheel hub.
2) Install caliper assembly to steering knuckle.
3) Torque caliper carrier bolts (1) to specification.

   Tightening Torque
   (a): 95 N·m (9.5 kg-m, 69.0 lb-ft)

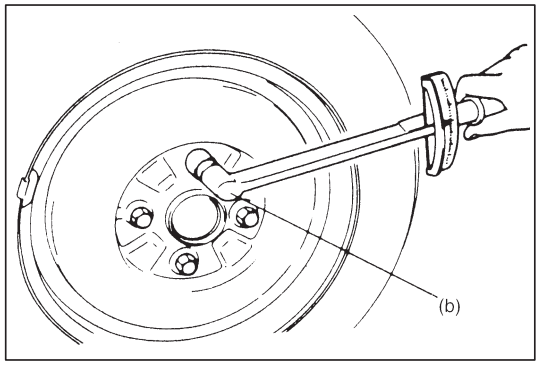

4) Torque front wheel nuts to specifications.

   Tightening Torque
   (b): 85 N·m (8.5 kg-m, 61.5 lb-ft)

5) Upon completion of installation, perform brake test.

REQUIRED SERVICE MATERIAL

MATERIALS	RECOMMENDED PRODUCT	USE
Brake fluid	DOT 4 or SAE J1704	● To fill master cylinder reservoir. ● To clean and apply to inner parts of caliper and wheel cylinder when they are disassembled.
Rubber grease	An equivalent of Molykote PG 54 plastislip or Molykote Q5-7544 (DOW CORNING made)	To caliper guiding and locking pins.

SPECIAL TOOLS

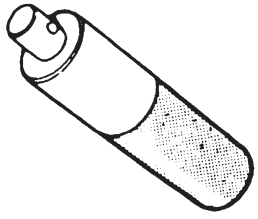 09924-74510 Bearing installer	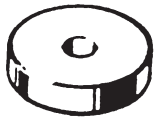 09944-88210 Bearing installer

SECTION 5C

PARKING AND REAR BRAKE

WARNING:
For vehicles equipped with Supplemental Restraint (Air Bag) System:

- **Service on and around the air bag system components or wiring must be performed only by an authorized SUZUKI dealer. Refer to "Air Bag System Components and Wiring Location View" under "General Description" in air bag system section in order to confirm whether you are performing service on or near the air bag system components or wiring. Please observe all WARNINGS and "Service Precautions" under "On-Vehicle Service" in air bag system section before performing service on or around the air bag system components or wiring. Failure to follow WARNINGS could result in unintentional activation of the system or could render the system inoperative. Either of these two conditions may result in severe injury.**
- **Technical service work must be started at least 90 seconds after the ignition switch is turned to the "LOCK" position and the negative cable is disconnected from the battery. Otherwise, the system may be activated by reserve energy in the Sensing and Diagnostic Module (SDM).**

NOTE:
All brake fasteners are important attaching parts in that they could affect the performance of vital parts and systems, and/or could result in major repair expense. They must be replaced with one of same part number or with an equivalent part if replacement becomes necessary. Do not use a replacement part of lesser quality or substitute design. Torque values must be used as specified during reassembly to assure proper retention of all parts. There is to be no welding as it may result in extensive damage and weakening of the metal.

CONTENTS

GENERAL DESCRIPTION

DRUM BRAKE ASSEMBLY

The drum brake assembly is of leading and trailing type drum brake and has a self shoe clearance adjusting system so that drum-to-shoe clearance is maintained appropriate at all times. The parking brake is mechanical and applies brake force to only rear wheels by means of the cable, linkage and shoes.

DIAGNOSIS

Refer to SECTION 5 (BRAKES).

CHECK AND ADJUSTMENT

Refer to SECTION 5 (BRAKES).

ON-VEHICLE SERVICE

CAUTION:
- **Replace all components included in repair kits to service this drum brake. Lubricate parts as specified.**
- **If any hydraulic component is removed or brake line disconnected, bleed the brake system.**
- **The torque values specified are for dry, unlubricated fasteners.**

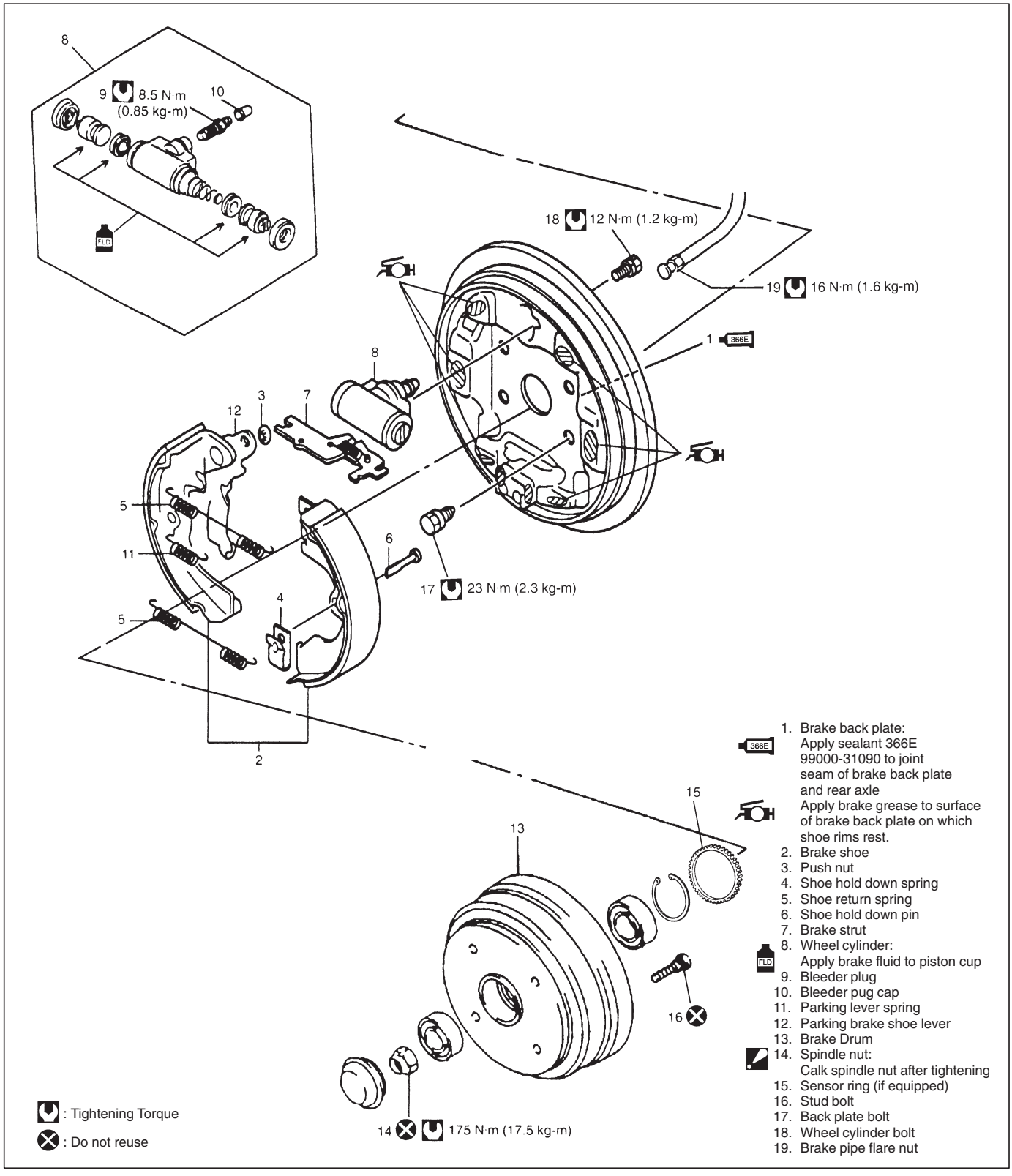

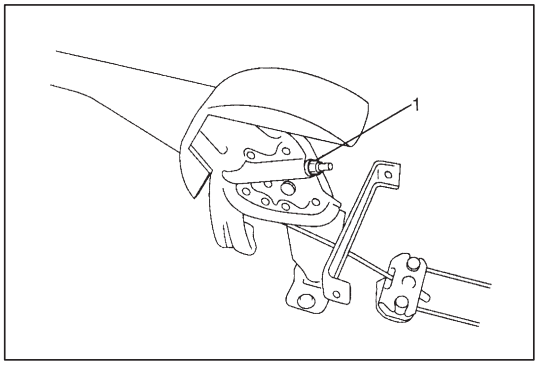

PARKING BRAKE LEVER

REMOVAL

1) Disconnect negative (–) cable at battery.
2) Remove console box.
3) Block vehicle wheels and release parking brake lever.
4) Disconnect lead wire of parking brake switch at coupler.
5) Loosen parking brake cable adjusting nut (1).

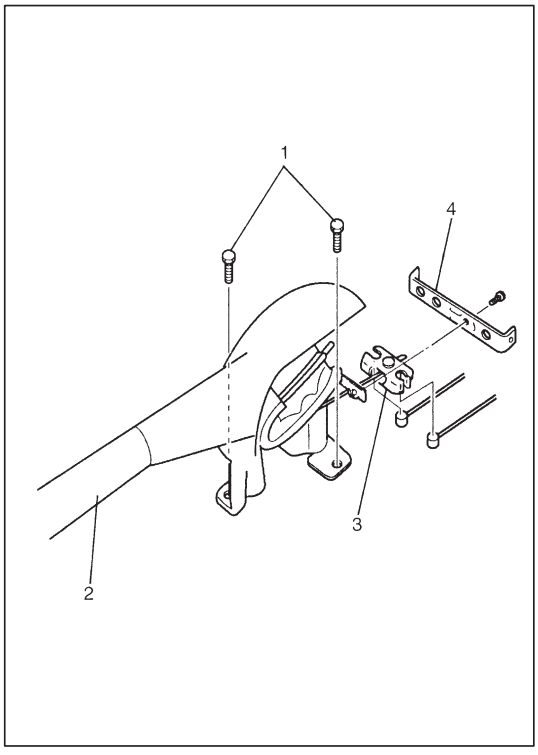

6) Remove parking brake lever bolts (1) and then remove parking brake lever assembly (2) with equalizer (3).
7) Remove console box bracket (4) from parking brake lever assembly.

NOTE:
Don't disassemble parking brake lever switch. It must be removed and installed as a complete switch assembly.

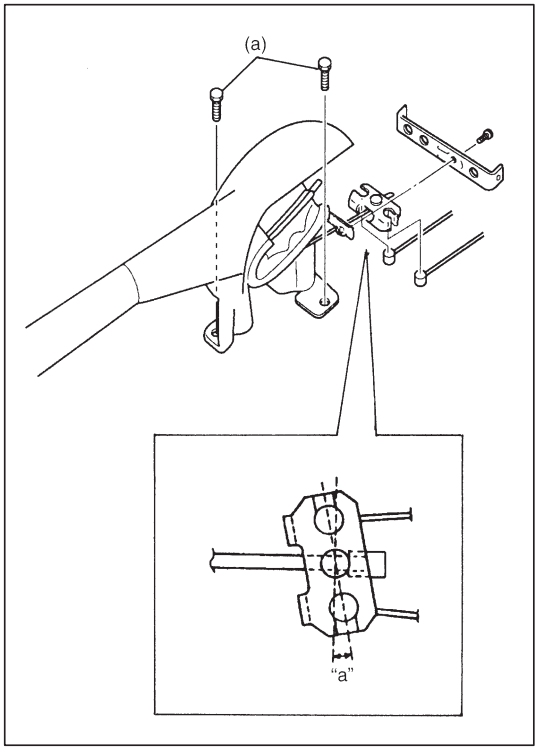

INSTALLATION

1) Install in reverse order of REMOVAL procedure.
   Check equalizer inclined angle.

   Angle "a": within 15 degrees

   Tightening Torque
   (a): 26 N·m (2.6 kg-m, 19.0 lb-ft)

2) After all parts are installed, parking brake lever needs to be adjusted. Refer to PARKING BRAKE INSPECTION AND ADJUSTMENT in SECTION 5.
3) Check brake drum for dragging and brake system for proper performance.

PARKING BRAKE CABLE

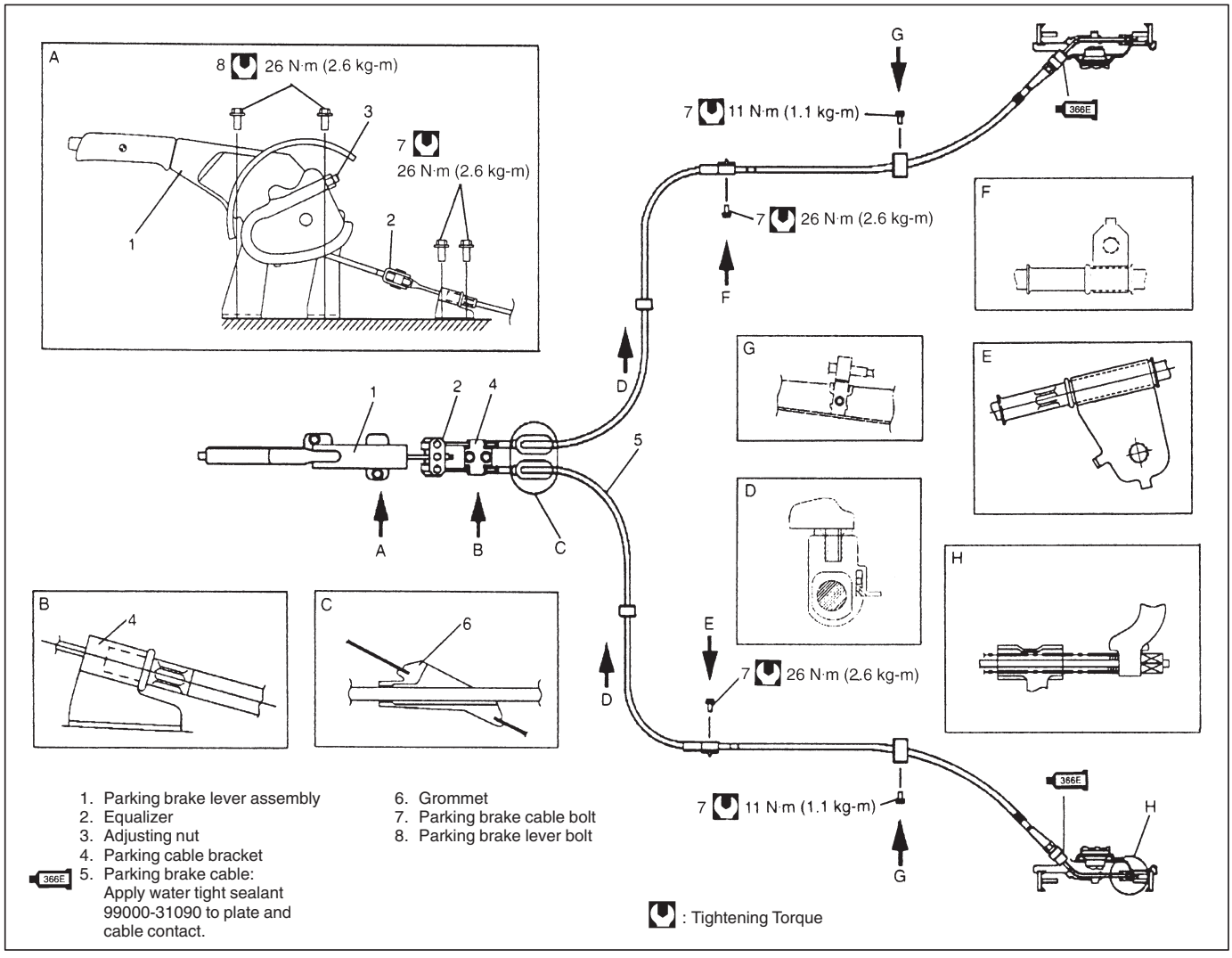

REMOVAL

1) Remove brake drum. (Refer to steps 1) to 5) of BRAKE DRUM REMOVAL of this section.)
2) Disconnect parking brake cable from brake shoe lever. (Refer to steps 2) to 4) of BRAKE SHOE REMOVAL of this section.)
3) Disconnect brake cable from brake back plate. (Refer to step 4) of BRAKE BACK PLATE REMOVAL of this section.)

NOTE:
When it is necessary to remove both right and left parking brake cables, repeat above steps 1) and 2) on right and left wheels.

4) Remove cable from equalizer.

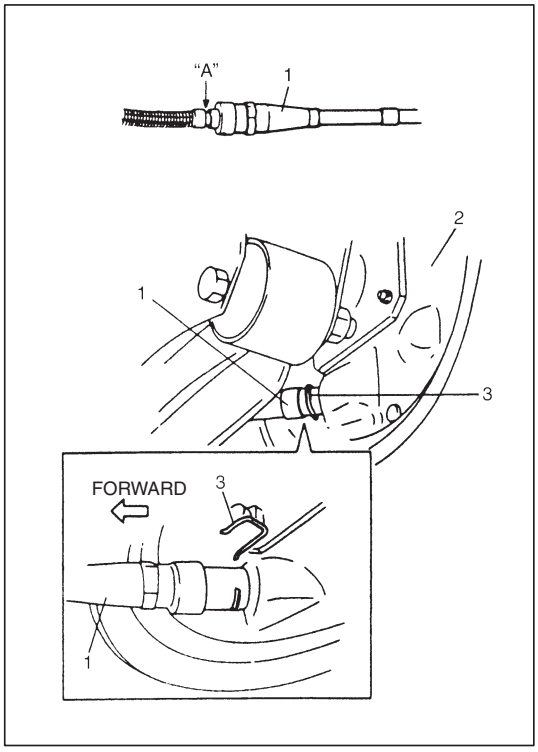

INSTALLATION

Install parts in reverse order of REMOVAL procedure, noting the following.

1) Distinguish right side parking brake cable from left side one with its clamp width.
   Parking brake cable with narrow clamp should be installed to right side of vehicle.
2) Apply water tight sealant where plate and cable contact, and run parking brake cable (1) through brake back plate (2) and secure it with clip (3).

   "A": Sealant 366E, 99000-31090

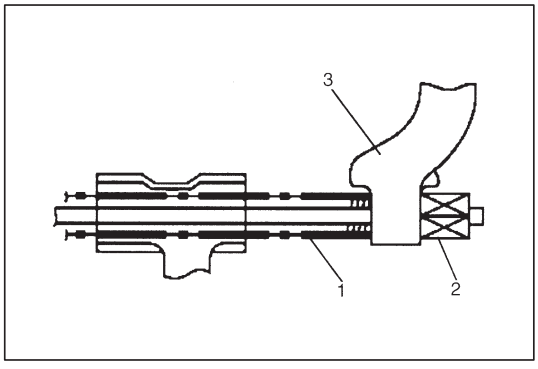

3) Install brake cable spring (1) and nipple end (2) to parking brake shoe lever (3) securely as shown in figure.

4) For brake shoe installation, refer to steps 1) to 3) of BRAKE SHOE INSTALLATION of this section.
5) For brake drum installation, refer to steps 3) to 8) of BRAKE DRUM INSTALLATION of this section.
6) For proper routing and secure clamping of parking brake cable.
7) Install cable to equalizer.
8) Upon completion of installation, adjust cable. (Refer to PARKING BRAKE INSPECTION AND ADJUSTMENT in SECTION 5.) Then check brake drum for dragging and brake system for proper performance. After removing vehicle from hoist, brake test should be performed.

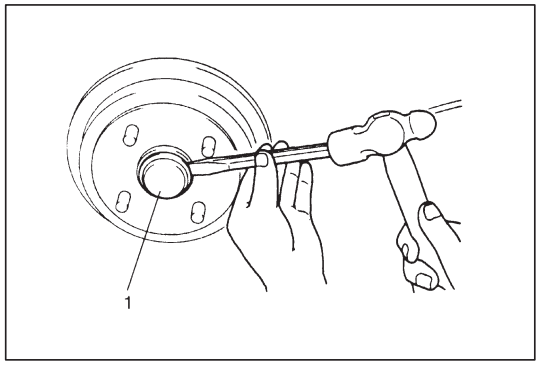

BRAKE DRUM

REMOVAL

1) Hoist vehicle and remove wheel.
2) Remove spindle cap (1) as shown (by hammering lightly at 3 locations around it so as not to deform or cause damage to seating part of cap).

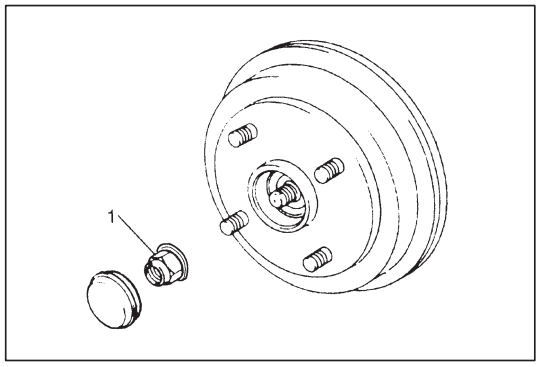

3) Uncalk spindle nut, remove spindle nut (1).

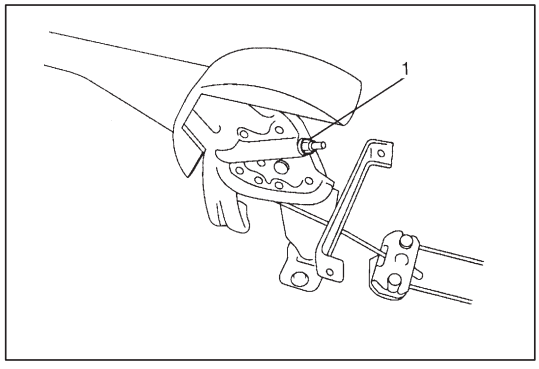

4) Release parking brake lever.
5) Remove brake drum.
   If brake drum can not be removed easily, increase clearance between brake shoes and drum as follows.
   a) Remove console box and loosen parking brake cable adjusting nut (1).

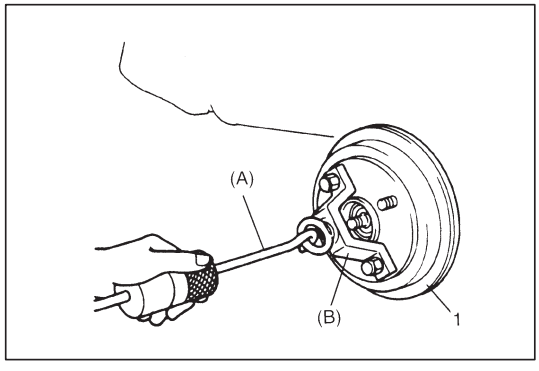

   b) Pull brake drum (1) off by hand.
      If it is hard to remove, use special tools.

      Special Tool
      (A): 09942-15510
      (B): 09943-17912

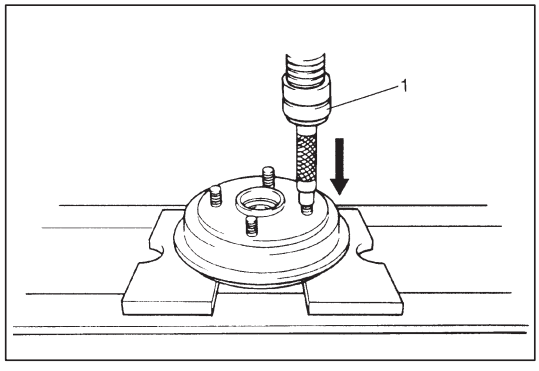

6) Remove wheel stud bolts by using hydraulic press (1).

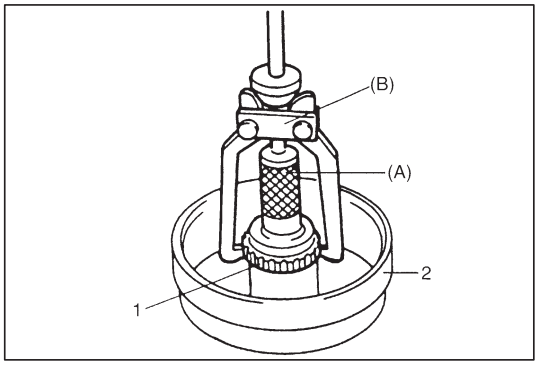

7) Remove sensor ring (1) from brake drum (2) using special tools (if equipped with ABS).

CAUTION:
Pull out sensor ring from brake drum gradually and evenly. Attempt to pull it out partially may cause it to be deformed.

Special Tool
(A): 09913-75520
(B): 09913-65135

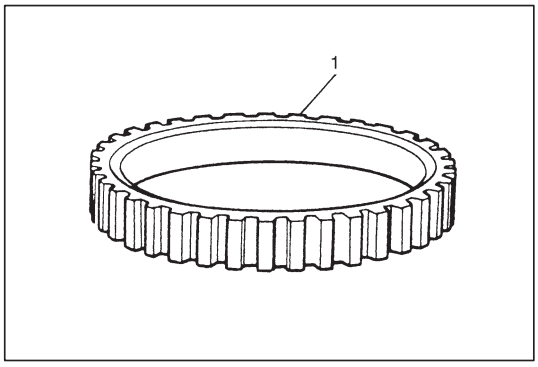

INSPECTION

Sensor Ring (if equipped with ABS)

- Check ring serration (teeth) for being missing, damaged or deformed.
- Check sensor ring for being deformed (warped).
- Check that no foreign material is attached.
  If any malcondition is found, repair or replace.

Brake Drum

Inspect drum for cleanliness. Check wear of its braking surface by measuring its inside diameter.

Inside diameter
Standard : 180 mm (7.09 in.)
Service Limit : 182 mm (7.16 in.)

Whenever brake drums are removed, they should be thoroughly cleaned and inspected for cracks, scores, deep grooves.

Cracked, Scored, or Grooved Drum

A cracked drum is unsafe for further service and must be replaced. Do not attempt to weld a cracked drum.
Smooth up any slight scores. Heavy or extensive scoring will cause excessive brake lining wear and it will probably be necessary to resurface drum braking surface.
If brake linings are slightly worn and drum is grooved, drum should be polished with fine emery cloth but should no be turned.

NOTE:
When drum is removed, visually inspect wheel cylinder for brake fluid leakage. Correct leaky point, if any.

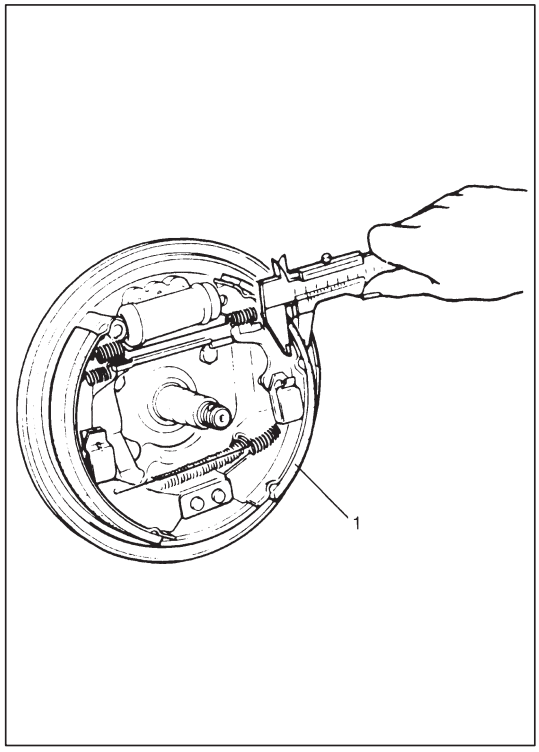

Brake shoe

Where lining is worn out beyond service limit, replace shoe.

Thickness (lining + shoe rim)
Standard : 5.5 mm (0.22 in.)
Service limit : 2.6 mm (0.10 in.)

If one of brake linings is to service limit, all linings must be replaced at the same time.

> **CAUTION:**
> **Never polish lining with sandpaper. If lining is polished with sandpaper, hard particles of sandpaper will be deposited in lining and may damage drum. When it is required to correct lining, replace it with a new one.**

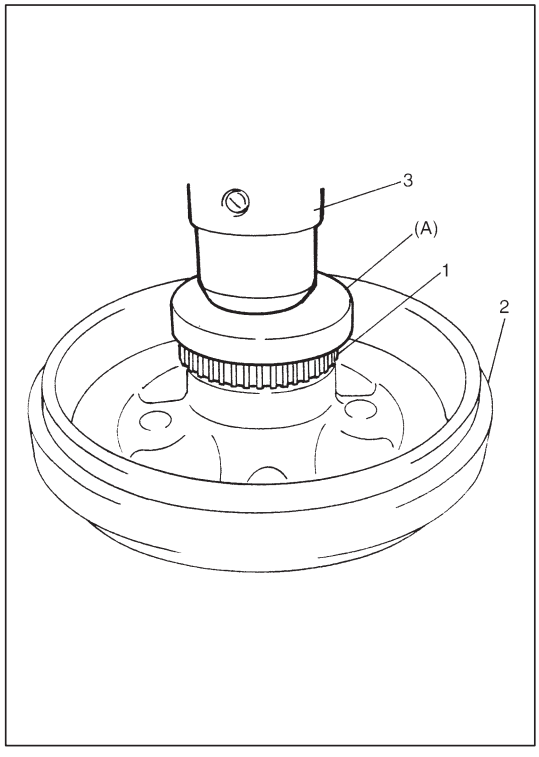

INSTALLATION

1) Install new sensor ring (1) to brake drum (2) by using special tool and hydraulic press (3) (if equipped with ABS).

> **CAUTION:**
> **Do not reuse (reinstall) removed sensor ring.**
> **Used sensor ring can not be press-fitted securely.**

Special Tool
(A): 09926-68310

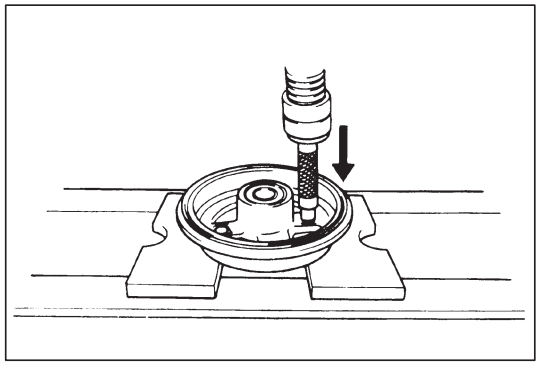

2) Insert new stud in drum hole and rotate it slowly to assure serrations are aligned with those made by replaced bolt.

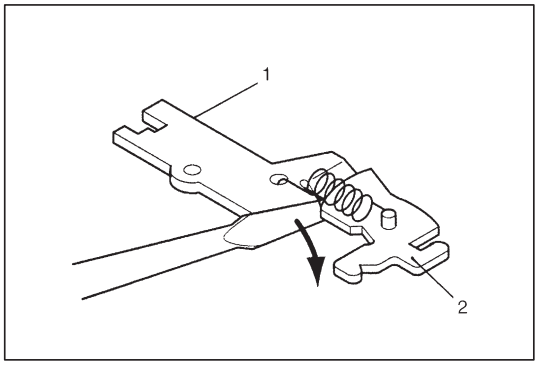

3) Put flat head rod or the like between rod (1) and rachet (2) and pull rachet as shown to maximize clearance between shoe and drum.

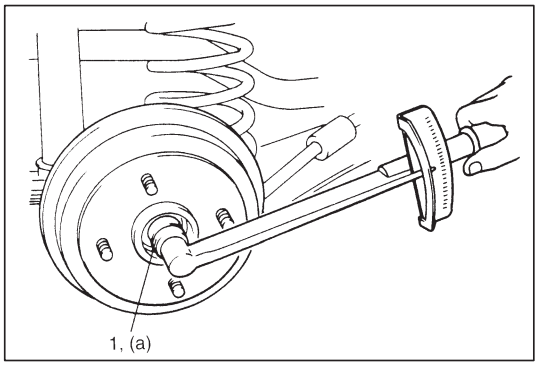

4) Install brake drum after making sure that inside of brake drum and brake shoes are free from dirt and oil.
5) Install new spindle nut (1).
6) Tighten spindle nut (1) to specified torque.

Tightening Torque
(a): 175 N·m (17.5 kg-m, 126.5 lb-ft)

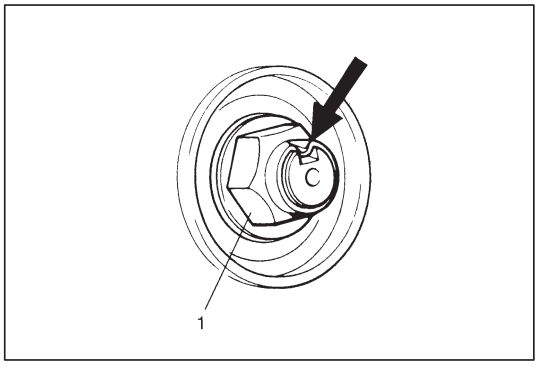

7) Calk spindle nut (1).
8) Install spindle cap.

NOTE:
- **When installing spindle cap, hammer lightly several locations on the collar of cap until collar comes closely into contact with brake drum.**
- **If fitting part of cap is deformed or damaged or if it is fitted loosely, replace with new one.**

9) Upon completion of all jobs, depress brake pedal with about 30 kg (66 lbs) load three to five times so as to obtain proper drum-to-shoe clearance.
   Adjust parking brake cable. (For adjustment, see PARKING BRAKE INSPECTION AND ADJUSTMENT in SECTION 5.)
10) Install console box if removed.

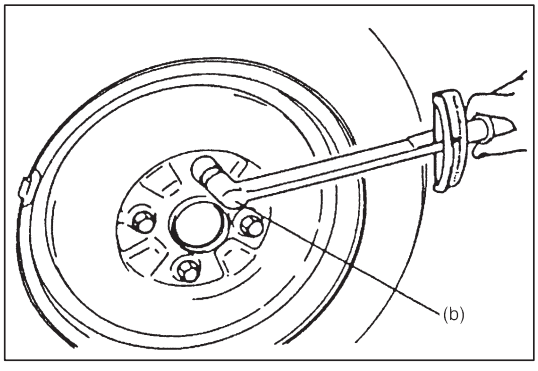

11) Install wheel and tighten wheel nuts to specified torque.

Tightening Torque
(b): 85 N·m (8.5 kg-m, 61.5 lb-ft)

12) Check to ensure that brake drum is free from dragging and proper braking is obtained. Then remove vehicle from hoist and perform brake test (foot brake and parking brake).

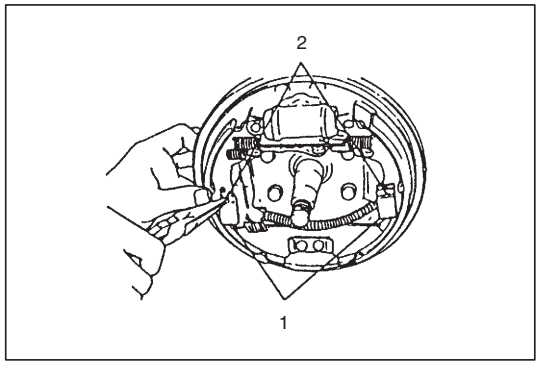

BRAKE SHOE

REMOVAL

1) Perform steps 1) to 5) of BRAKE DRUM REMOVAL.
2) Remove shoe hold down springs (1) by turning shoe hold down pins (2).
3) Remove return springs, brake shoes and strut.

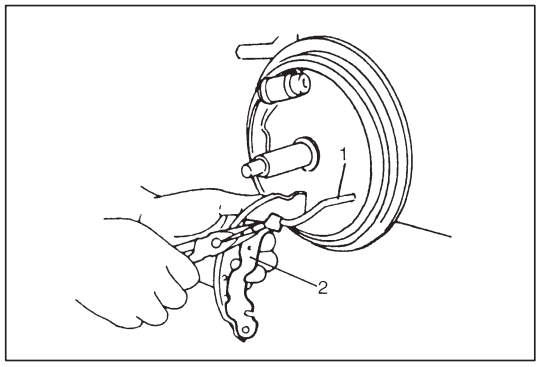

4) Disconnect parking brake cable (1) from parking brake shoe lever (2).

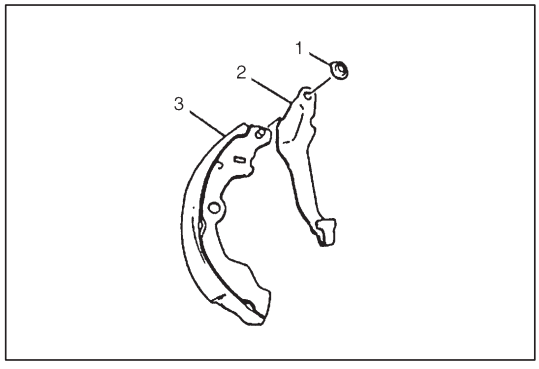

5) Remove push nut (1).
6) Remove parking brake shoe lever (2) from shoe rim (3).

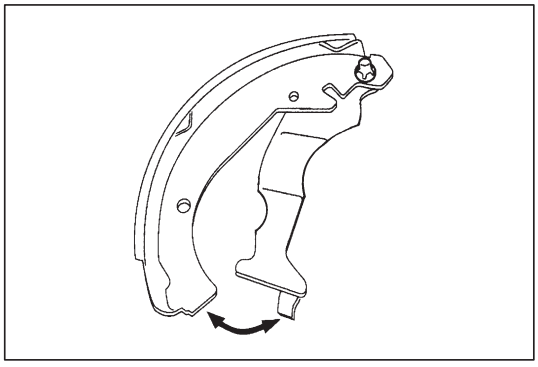

INSPECTION

Parking Shoe Lever

Inspect brake shoe lever for smooth movement along shoe rim. If defective, correct or replace.

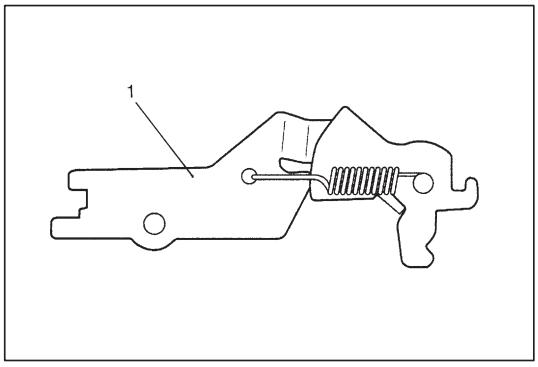

Brake Strut

- Check ratchet of brake strut (1) assembly for wear or damage.
- Check shoe return spring, strut shoe return spring and shoe hold down spring for damage, corrosion and weakening.

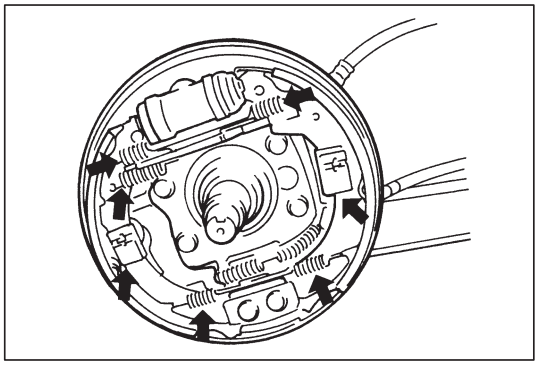

Springs

Inspect for damage or weakening.
Inspect each part with arrow for rust. If found defective, replace.

Brake Shoe

Refer to BRAKE DRUM INSPECTION in this section.

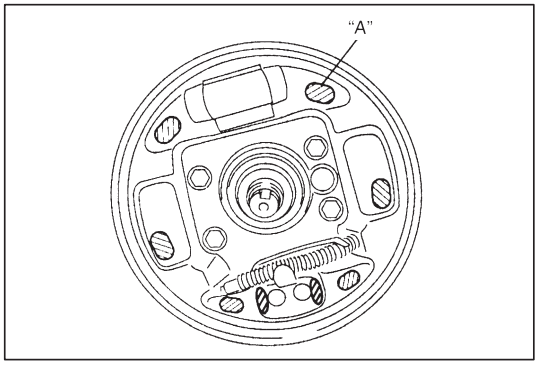

INSTALLATION

1) Clean brake back plate and apply thin coat of grease to eight surfaces on which shoe rims rest.

   "A": Bentonite base brake grease (Anti-squeal agent)

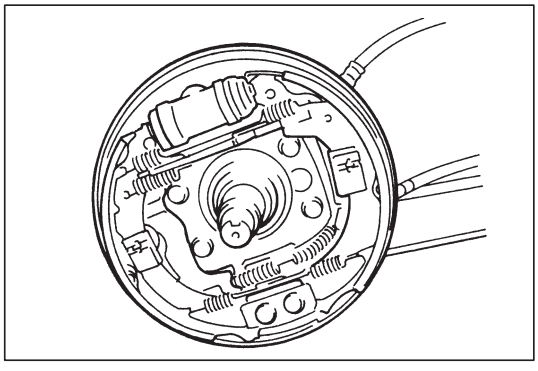

2) Assemble parts as shown in reverse order of REMOVAL.

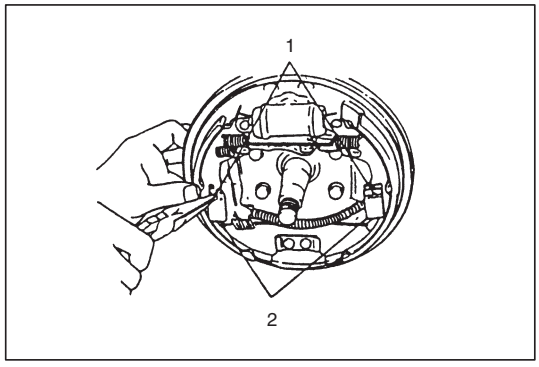

3) Install shoe hold down springs (2) by pushing them down in place and turning hold down pins (1).
4) For procedure hereafter, refer to steps 3) to 12) of BRAKE DRUM INSTALLATION in this section.

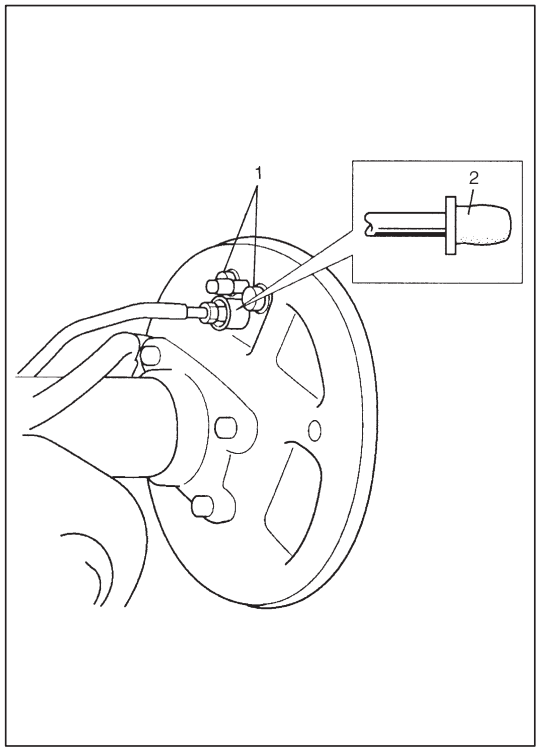

WHEEL CYLINDER

REMOVAL

1) Perform steps 1) to 5) of BRAKE DRUM REMOVAL.
2) Perform steps 2) to 4) of BRAKE SHOE REMOVAL.
3) Loosen brake pipe flare nut but only within the extent that fluid does not leak.
4) Remove wheel cylinder mounting bolts (1). Disconnect brake pipe from wheel cylinder and put wheel cylinder bleeder plug cap (2) onto pipe to prevent fluid from spilling.

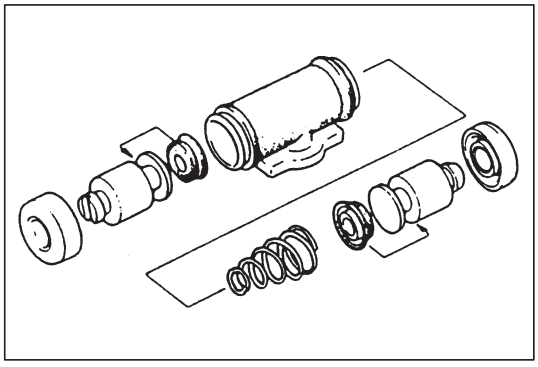

INSPECTION

Inspect wheel cylinder disassembled parts for wear, cracks, corrosion or damage.

NOTE:
Clean wheel cylinder components with brake fluid.

INSTALLATION

1) Take off bleeder plug cap from brake pipe and connect pipe (for pipes) to wheel cylinder just enough to prevent fluid from leaking.

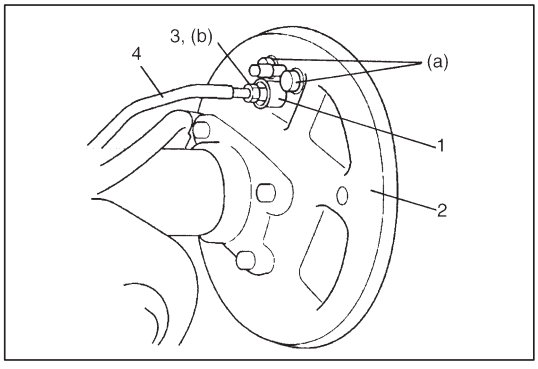

2) Tighten wheel cylinder (1) to brake back plate (2) to specified torque.
3) Torque flare nut (3) of brake pipe (4) which was connected in step 1) to specification.

   Tightening Torque
   (a): 12 N·m (1.2 kg-m, 9.0 lb-ft)
   (b): 16 N·m (1.6 kg-m, 12.0 lb-ft)

4) Install bleeder plug cap taken off from pipe back to bleeder plug.
5) For procedure hereafter, refer to steps 1) to 6) of BRAKE SHOE INSTALLATION.

   NOTE:
   Be sure to bleed brake system. (for bleeding operation, see BLEEDING BRAKES in SECTION 5.)

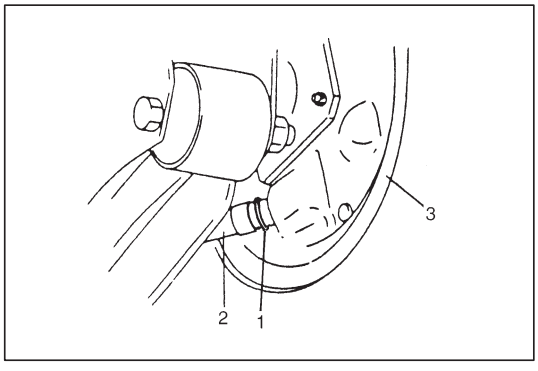

BRAKE BACK PLATE

REMOVAL

1) Perform steps 1) to 5) of BRAKE DRUM REMOVAL in this section.
2) Perform steps 2) to 4) of BRAKE SHOE REMOVAL in this section.
3) Perform steps 3) and 4) of WHEEL CYLINDER REMOVAL in this section.
4) Remove parking brake cable securing clip (1) and disconnect brake cable (2) from brake back plate (3).

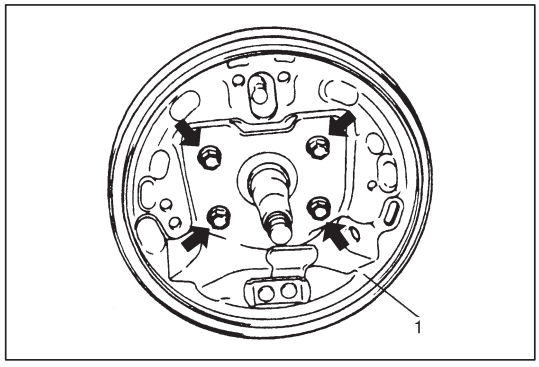

5) Remove brake back plate (1) from rear axle.

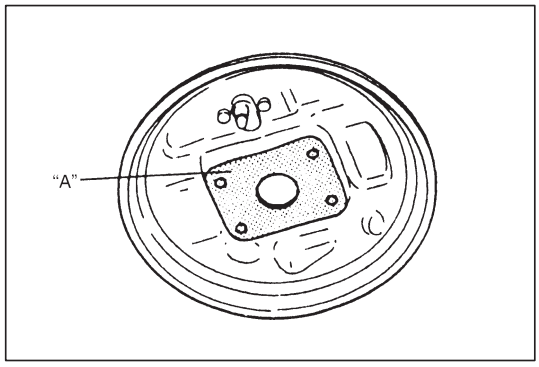

INSTALLATION

1) Apply water tight sealant to mating surfaces of brake back plate and rear axle.

   "A": Sealant 366E, 99000-31090

   NOTE:
   In case of vehicle equipped with ABS, do not apply sealant around hole for wheel speed sensor.

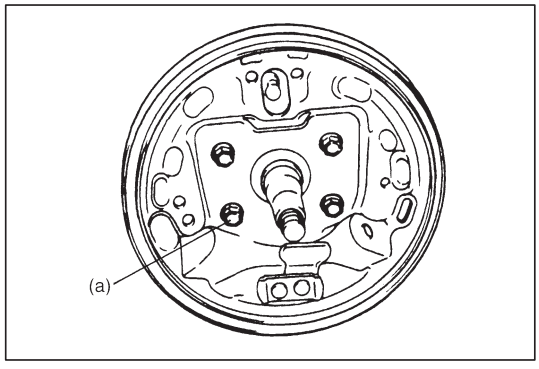

2) Install brake back plate and tighten back plate bolts to specified torque.

   Tightening Torque
   (a): 23 N·m (2.3 kg-m, 16.5 lb-ft)

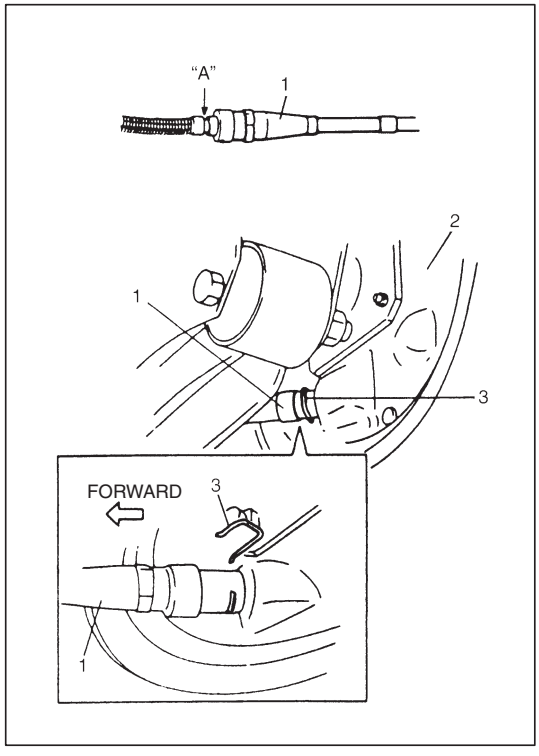

3) Apply water tight sealant where plate and cable contact, and run parking brake cable (1) through brake back plate (2) and secure it with clip (3).

   "A": Sealant 366E, 99000-31090

4) Install wheel cylinder, and tighten wheel cylinder bolts and brake pipe flare nut to specified torque. (Refer to steps 1) to 4) of WHEEL CYLINDER INSTALLATION in this section.)
5) Install brake shoes, referring to steps 1) to 3) of BRAKE SHOE INSTALLATION in this section.
6) Install brake drum. Refer to steps 3) to 8) of its INSTALLATION in this section.
7) Fill reservoir with brake fluid and bleed brake system. (For bleeding operation, see BLEEDING BRAKES in SECTION 5.)

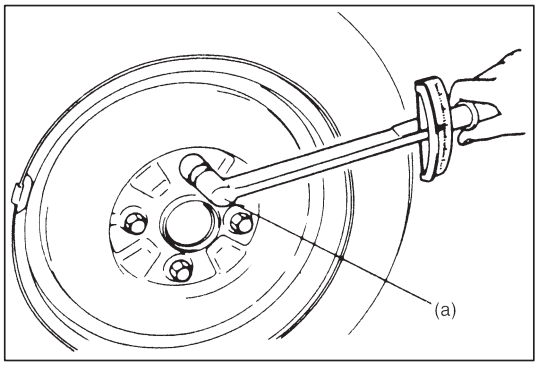

8) Install wheel and tighten wheel nuts to specified torque.

   Tightening Torque
   (a): 85 N·m (8.5 kg-m, 61.5 lb-ft)

9) Upon completion of all jobs, depress brake pedal with about 30 kg (66 lbs) load three to five times so as to obtain proper drum-to-shoe clearance.
   Adjust parking brake cable. (For adjustment, see PARKING BRAKE INSPECTION and ADJUSTMENT in SECTION 5.)
10) Install console box, if removed.
11) Check to ensure that brake drum is free from dragging and proper braking is obtained. Then remove vehicle from hoist and perform brake test (foot brake and parking brake).
12) Check each installed part for oil leakage.

REQUIRED SERVICE MATERIALS

MATERIALS	RECOMMENDED PRODUCT	USE
Brake fluid	DOT 4 or SAE J1704	● To fill master cylinder reservoir. ● To clean and apply to inner parts of caliper and wheel cylinder when they are disassembled.
Water tight sealant	SEALING COMPOUND 366E 99000-31090	● To apply to mating surfaces of brake back plate and rear wheel cylinder. ● To apply to contact position of parking brake cable and back plate. ● To apply to mating surfaces of brake back plate and rear axle.
Anti-squeal agent	Hydrocarbon base brake grease	● To coat thinly to surface on which shoe rims rest.

SPECIAL TOOLS

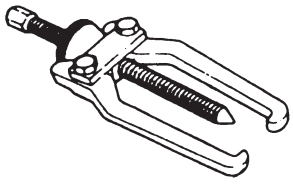 09913-65135 Bearing puller	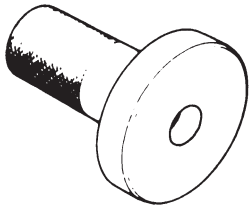 09913-75520 Bearing installer	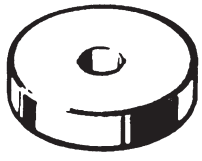 09926-68310 Bearing installer	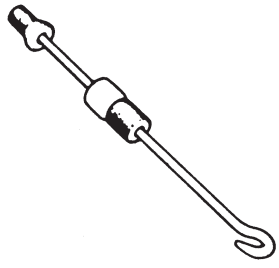 09942-15510 Sliding hammer
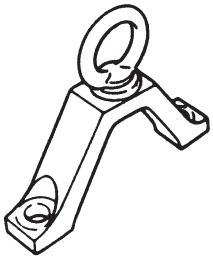 09943-17912 Brake drum remover (Front wheel hub remover)	 09950-78230 Flare nut wrench (10 × 11 mm)		

SECTION 5E1

ANTILOCK BRAKE SYSTEM (ABS)

WARNING:
For vehicles equipped with Supplemental Restraint (Air Bag) System:
- **Service on and around the air bag system components or wiring must be performed only by an authorized SUZUKI dealer. Refer to "Air Bag System Components and Wiring Location View" under "General Description" in air bag system section in order to confirm whether you are performing service on or near the air bag system components or wiring. Please observe all WARNINGS and "Service Precautions" under "On-Vehicle Service" in air bag system section before performing service on or around the air bag system components or wiring. Failure to follow WARNINGS could result in unintentional activation of the system or could render the system inoperative. Either of these two conditions may result in severe injury.**
- **Technical service work must be started at least 90 seconds after the ignition switch is turned to the "LOCK" position and the negative cable is disconnected from the battery. Otherwise, the system may be activated by reserve energy in the Sensing and Diagnostic Module (SDM).**

NOTE:
All brake fasteners are important attaching parts in that they could affect the performance of vital parts and systems, and/or could result in major repair expense. They must be replaced with one of same part number or with an equivalent part if replacement becomes necessary. Do not use a replacement part of lesser quality or substitute design. Torque values must be used as specified during reassembly to assure proper retention of all parts. There is to be no welding as it may result in extensive damage and weakening of the metal.

CONTENTS

GENERAL DESCRIPTION

COMPONENTS AND PARTS LOCATION

The ABS (Antilock Brake System) controls the fluid pressure applied to the Wheel cylinder of each brake from the master cylinder so that each wheel is not locked even when hard braking is applied.
This ABS has also the following function.
While braking is applied, but before ABS control becomes effective, braking force is distributed between the front and rear so as to prevent the rear wheels from being locked too early for better stability of the vehicle.
The main component parts of this ABS include the following parts in addition to those of the conventional brake system.

- Wheel speed sensor which senses revolution speed of each wheel and outputs its signal.
- "ABS" warning lamp which lights to inform abnormality when system fails to operate properly.
- ABS hydraulic unit/control module assembly is incorporated ABS control module, ABS hydraulic unit (actuator assembly), fail-safe relay and pump motor relay.

– ABS control module which sends operation signal to ABS hydraulic unit to control fluid pressure applied to each wheel cylinder based on signal from each wheel speed sensor so as to prevent wheel from locking.
– ABS hydraulic unit which operates according to signal from ABS control module to control fluid pressure applied to wheel cylinder of each 4 wheels.
– Fail-safe relay (solenoid valve) relay which supplies power to solenoid valve in ABS hydraulic unit and pump motor relay.
– Pump motor relay which supplies power to pump motor in ABS hydraulic unit.

LH steering vehicle shown

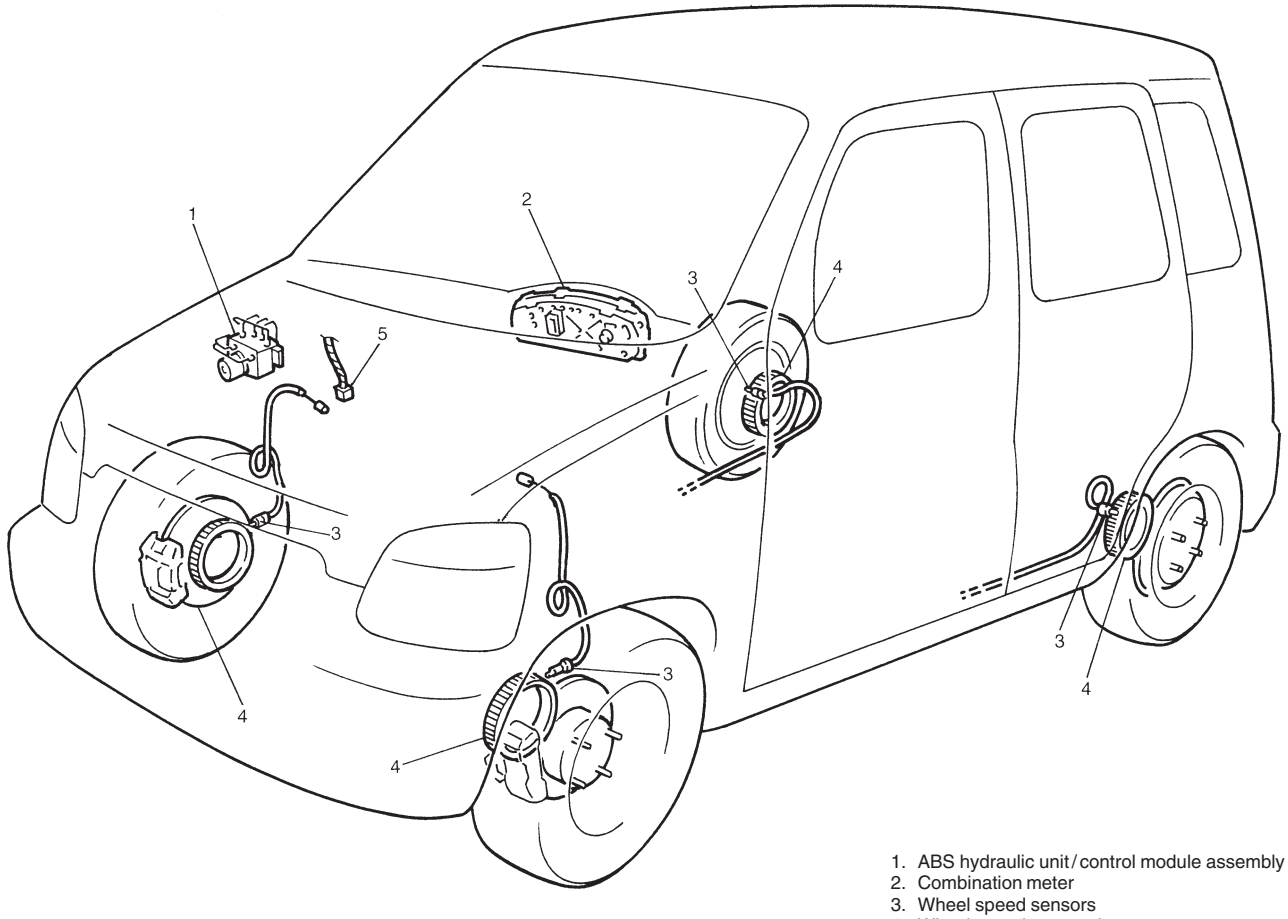

1. ABS hydraulic unit/control module assembly
2. Combination meter
3. Wheel speed sensors
4. Wheel speed sensor rings
5. Monitor coupler

SYSTEM SCHEMATIC

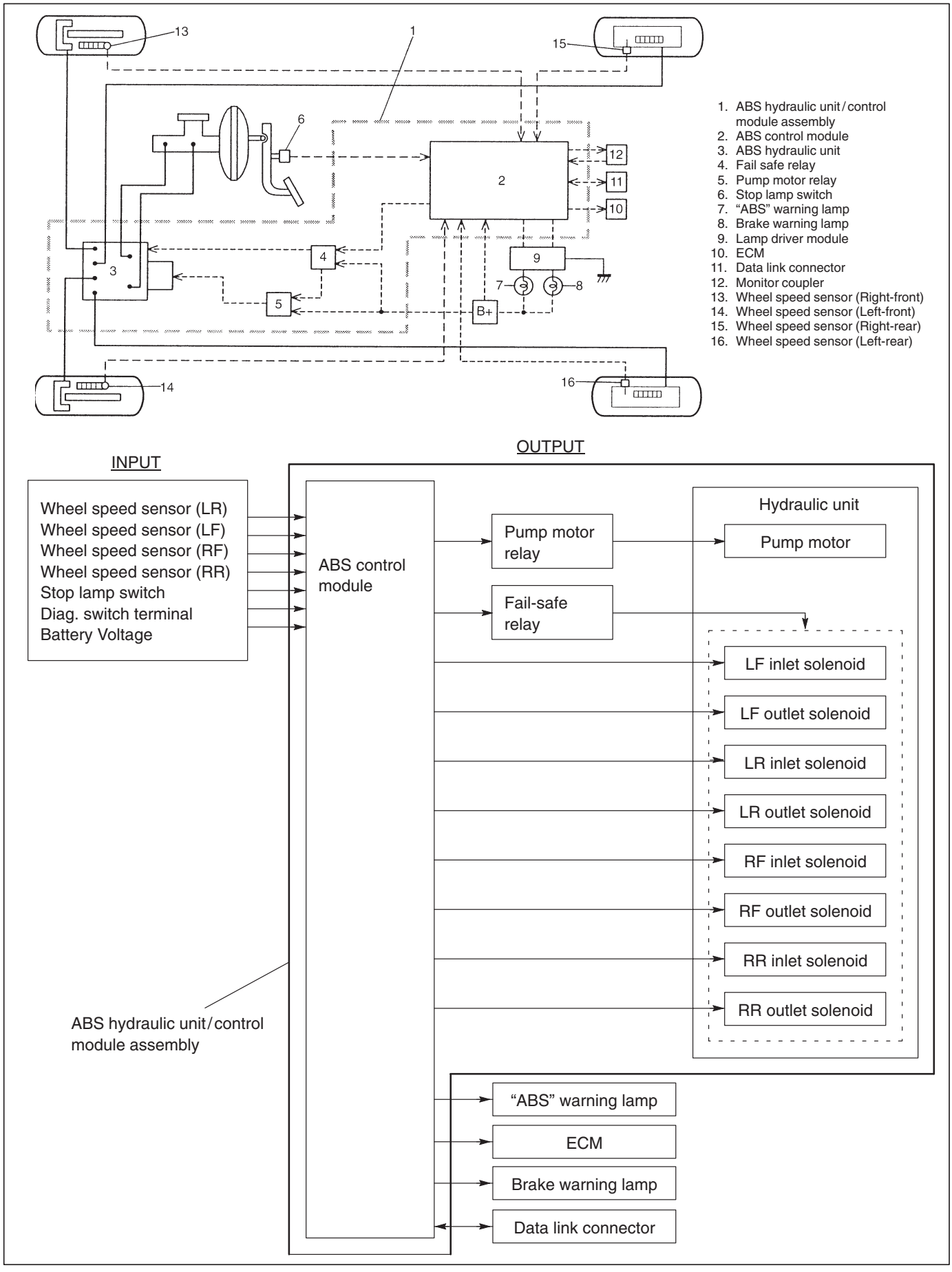

BRAKE HOSE/PIPE ROUTING

For LH Steering Vehicle

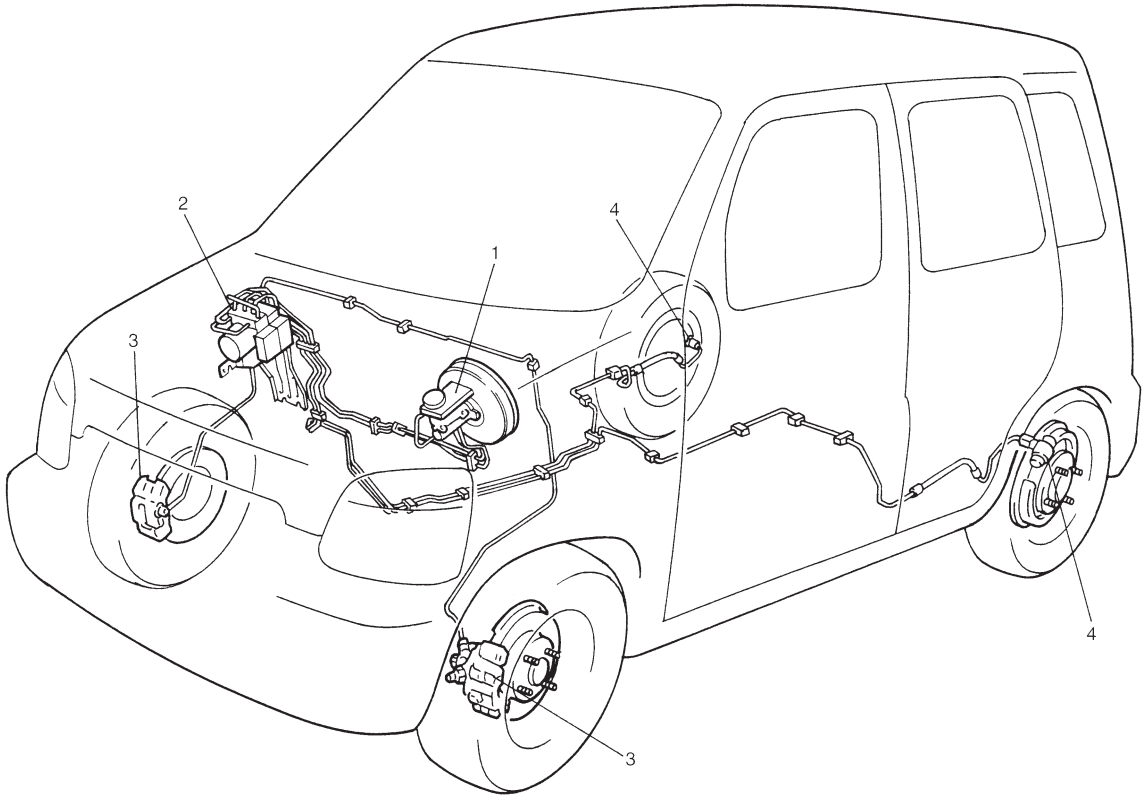

For RH Steering Vehicle

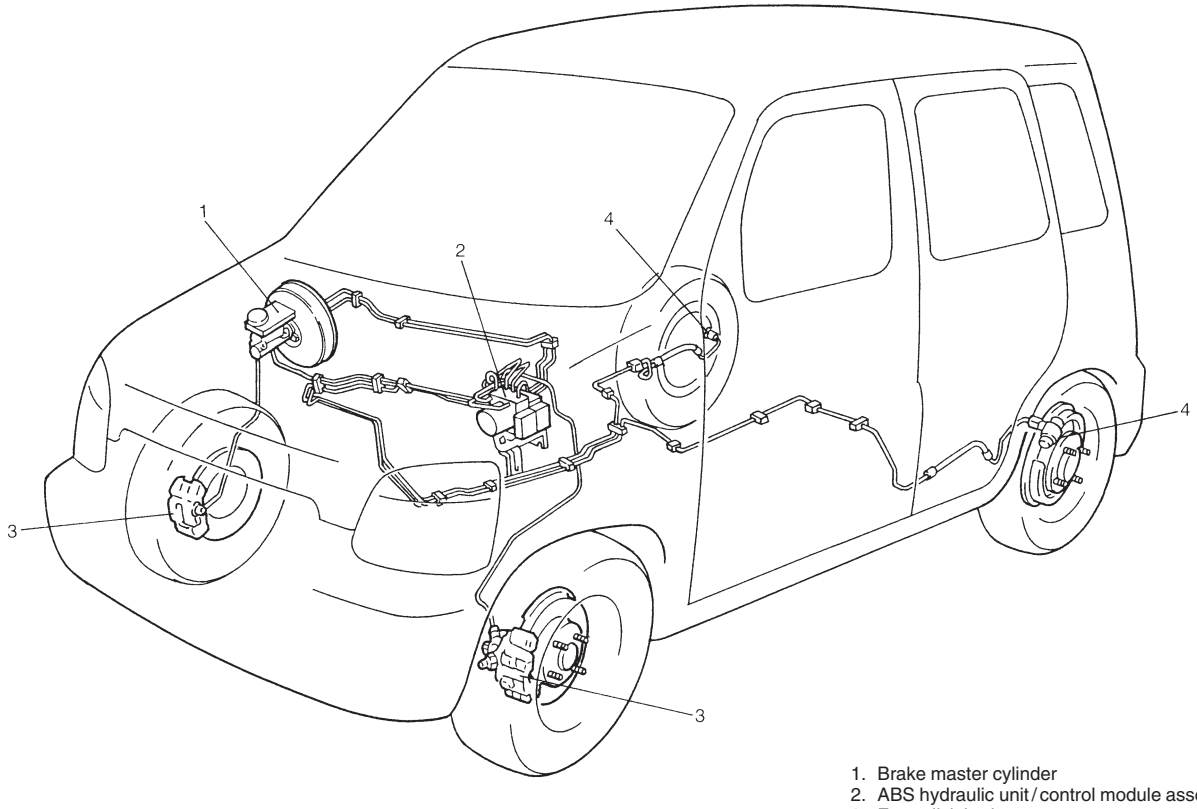

1. Brake master cylinder
2. ABS hydraulic unit / control module assembly
3. Front disk brakes
4. Rear drum brakes

ABS HYDRAULIC UNIT/CONTROL MODULE ASSEMBLY

ABS control module is a component of ABS hydraulic unit/control module assembly and has the following functions.

Self-Diagnosis Function

ABS control module diagnoses conditions of the system component parts (whether or not there is any abnormality) all the time and indicates the results (warning of abnormality occurrence and DTC) through the “ABS” warning lamp as described below.

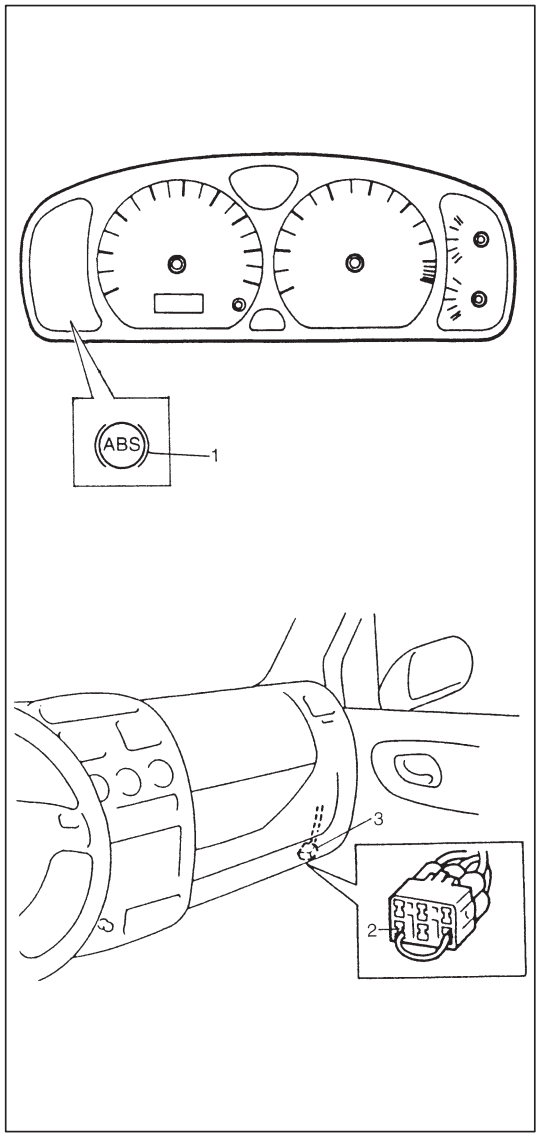

NOTE:
ABS control module assembly may turns ON brake warning lamp as well as “ABS” warning lamp depending on the trouble that detected by ABS control module.

1) When ignition switch is turned ON, “ABS” warning lamp (1) lights for 2 seconds to check its bulb and circuit.
2) When no abnormality has been detected (the system is in good condition), “ABS” warning lamp turns OFF after 2 seconds.
3) When an abnormality in the system is detected, “ABS” warning lamp is kept light and the area where that abnormality lies is stored in the memory in ABS control module.
4) When diagnosis switch terminal (2) of monitor coupler (3) is grounded as shown in figure, the abnormal area is output as DTC.

SYSTEM CONDITION		DIAGNOSIS SWITCH TERMINAL	“ABS” WARNING LAMP
In good condition at present	No trouble in the past	Open	OFF
		Grounded	DTC 12
	Trouble occurred in the past	Open	OFF
		Grounded	History DTC
Abnormality exists at present	No trouble in the past	Open	ON
		Grounded	Current DTC
	Trouble occurred in the past	Open	ON
		Grounded	Current and history DTC

NOTE:
The current code and the history code are displayed without any classification.

Fail-Safe Function

When an abnormality occurs (an abnormal DTC is detected), ABS control module turns OFF the fail-safe relay which supplies power to ABS hydraulic unit. Thus, with ABS not operating, brakes function just like the brake system of the vehicle without ABS.

SYSTEM CIRCUIT

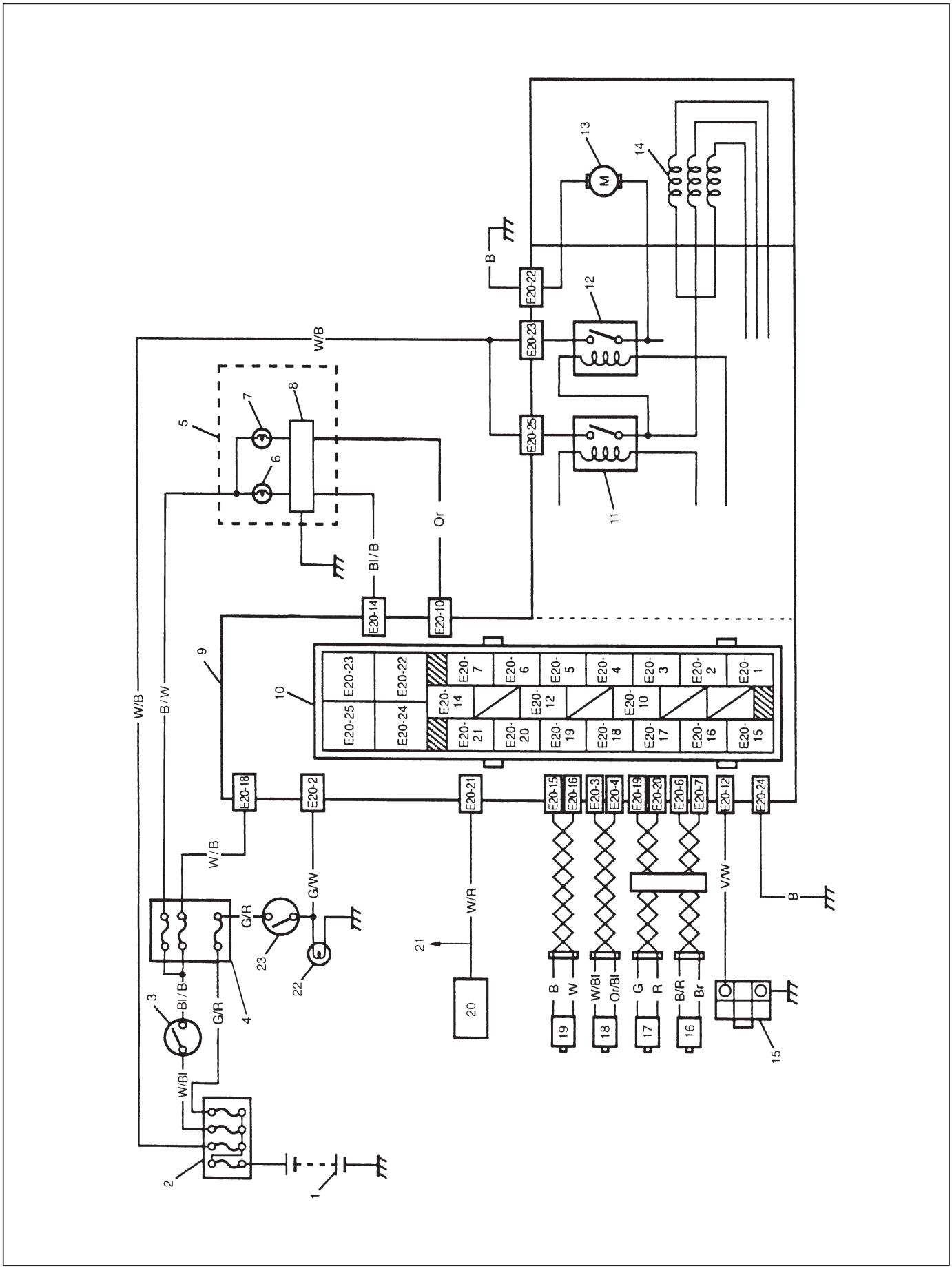

1. Battery
2. Main fuses
3. Ignition switch
4. Circuit fuses
5. Combination meter
6. “ABS” warning lamp
7. Brake warning lamp
8. Warning lamp driver module (for ABS)
9. ABS hydraulic unit/control module assembly
10. Terminal arrangement of ABS hydraulic unit/control module assembly
11. ABS fail-safe relay (Solenoid valve relay)
12. ABS pump motor relay
13. Pump motor
14. Solenoid valves
15. Diagnosis monitor coupler
16. Right-rear wheel speed sensor
17. Left-rear wheel speed sensor
18. Right-front wheel speed sensor
19. Left-front wheel speed sensor
20. Data link connector
21. To ECM, SDM and EPS controller (if equipped)
22. Stop lamp
23. Stop lamp switch

Wire color

B : Black
B/G : Black/Green
B/R : Black/Red
B/W : Black/White
B/Y : Black/Yellow
Bl : Blue
Bl/B : Blue/Black
Bl/Y : Blue/Yellow
Bl/W : Blue/White
Br : Brown
G : Green
G/R : Green/Red
G/W : Green/White
Or/Bl : Orange/Blue
R : Red
R/B : Red/Black
R/Bl : Red/Blue
R/W : Red/White
R/Y : Red/Yellow
V : Violet
V/Y : Violet/Yellow
W : White
W/B : White/Black
W/Bl : White/Blue
W/G : White/Green
W/R : White/Red
W/Y : White/Yellow

TERMINAL	CIRCUIT
E20-1	——
E20-2	Stop lamp switch
E20-3	Right-front wheel speed sensor (+)
E20-4	Right-front wheel speed sensor (–)
E20-5	——
E20-6	Right-rear wheel speed sensor (–)
E20-7	Right-rear wheel speed sensor (+)
E20-8	——
E20-9	——
E20-10	Brake warning lamp
E20-11	——
E20-12	Diagnosis switch terminal
E20-13	——
E20-14	“ABS” warning lamp
E20-15	Left-front wheel speed sensor (+)
E20-16	Left-front wheel speed sensor (–)
E20-17	——
E20-18	Ignition switch
E20-19	Left-rear wheel speed sensor (+)
E20-20	Left-rear wheel speed sensor (–)
E20-21	Data link connector
E20-22	Ground (for ABS pump motor)
E20-23	ABS pump motor relay
E20-24	Ground (for ABS control module)
E20-25	ABS fail-safe relay

DIAGNOSIS

To ensure that the trouble diagnosis is done accurately and smoothly, observe “Precautions in Diagnosing Troubles” and follow “ABS Diagnostic Flow Table”.

PRECAUTIONS IN DIAGNOSING TROUBLES

- If the vehicles was operated in any of the following ways, “ABS” warning lamp may light momentarily but this does not indicate anything abnormal in ABS.
  – The vehicle was driven with parking brake pulled.
  – The vehicle was driven with brake dragging.
  – The vehicle was stuck in mud, sand, etc.
  – Wheel spin occurred while driving.
  – Wheel(s) was rotated while the vehicle was jacked up.
- Be sure to read “Precautions for Electronic Circuit Service” in Section 0A before inspection and observe what is written there.
- Be sure to use the trouble diagnosis procedure as described in the flow table. Failure to follow the flow table may result in incorrect diagnosis. (Some other diagnosis trouble code may be stored by mistake in the memory of ABS control module during inspection.)

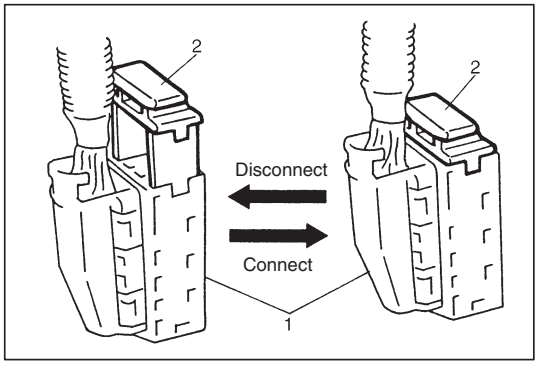

- When disconnecting ABS hydraulic unit/control module connector (1), pull up lock (2) of connector.
  When connecting, set the connector on ABS hydraulic unit/control module assembly and push the lock (2) down.

ABS DIAGNOSTIC FLOW TABLE

Refer to the following pages for the details of each step.

STEP	ACTION	YES	NO
1	1) Perform “Customer Complaint Analysis”. 2) Perform “Problem Symptom Confirmation”. 3) Perform “Diagnostic Trouble Code Check, Record and Clearance”. Is there any malfunction DTC?	Go to Step 2.	Go to Step 5.
2	1) Perform “Driving Test”. Is trouble symptom identified?	Go to Step 3.	Go to Step 6.
3	1) Check diagnostic trouble code. Is it malfunction code?	Go to Step 4.	Go to Step 5.
4	1) Inspect and repair referring to applicable diagnostic trouble code table in this section. 2) Perform “Final Confirmation Test” after cleared DTC. Does trouble recur?	Go to Step 7.	End.
5	1) Inspect and repair referring to “DIAGNOSIS” in “BRAKES” section. 2) Perform “Final Confirmation Test”.	–	–
6	1) Check intermittent troubles referring to “Intermittent and Poor Connection” in “GENERAL INFORMATION” section and related circuit of trouble code recorded in step 2. 2) Perform “Final Confirmation Test” after cleared diagnostic trouble code. Does trouble recur?	Go to Step 7.	End.
7	1) Perform “Diagnostic Trouble Code Check, Record and Clearance”. Is there any malfunction code?	Go to Step 2.	Go to Step 5.

1. MALFUNCTION ANALYSIS

i) Customer Complaint Analysis

Record details of the problem (failure, complaint) and how it occurred as described by the customer. For this purpose, use of such a questionnaire form as shown below will facilitate collecting information to the point required for proper analysis and diagnosis.

CUSTOMER QUESTIONNAIRE (EXAMPLE)

Customer's name:	Model:	VIN:	
Date of issue:	Date of Reg:	Date of problem:	Mileage:

Problem Symptoms	● "ABS" warning lamp abnormal: fails to turn on/fails to go off/flashes ● Abnormal noise while vehicle is running: from motor, from valve, other_____ ● Wheel is locked at braking: ● Pump motor does not stop (running): ● Braking does not work: ● Other:
Frequency of occurrence	● Continuous/Intermittent (times a day, a month)/ other_____
Conditions for Occurrence of Problem	● Vehicle at stop & ignition switch ON: ● When starting: at initial start only/at every start/Other_____ ● Vehicle speed: while accelerating/while decelerating/at stop/ while turning/while running at constant speed/ other_____ ● Road surface condition: Paved road/rough road/snow-covered road/ other_____ ● Chain equipment:
Environmental Condition	● Weather: fair/cloudy/rain/snow/other_____ ● Temperature: °F (°C)
Diagnostic Trouble Code	● First check: Normal code/malfunction code ( ) ● Second check after test drive: Normal code/malfunction code ( )

ii) Problem Symptom Confirmation

Check if what the customer claimed in CUSTOMER QUESTIONNAIRE is actually found in the vehicle and if that symptom is found, whether it is identified as a failure. (This step should be shared with the customer if possible.) Check warning lamps related to brake system referring to “Brake Warning Lamp Check” and “ABS Warning Lamp Check” in this section.

iii) Diagnostic Trouble Code (DTC) Check, Record and Clearance

Perform “Diagnostic Trouble Code Check” procedure in this section, record it and then clear it referring to “Diagnostic Trouble Code Clearance” in this section.

If the malfunction DTC which was once displayed and then cleared cannot be detected (indicated) again when the ignition switch is turned ON, attempt to diagnose the trouble based on the DTC recorded in this step may mislead the diagnosis or make diagnosing difficult. Proceed to Step 2 to check control module for proper self-diagnosis function.

If the malfunction DTC which was once displayed and then cleared can be detected (indicated) again when ignition switch is turned ON, proceed to Step 3.

2. DRIVING TEST

Test drive the vehicle at 40 km/h for more than a minute and check if any trouble symptom (such as abnormal lighting of “ABS” warning light) exists.

If the malfunction DTC is confirmed again at ignition switch ON, driving test as described in above is not necessary. Proceed to Step 3.

3. DIAGNOSTIC TROUBLE CODE CHECK

Recheck diagnostic trouble code referring to item “DTC CHECK” as shown in the following page.

4. DIAGNOSTIC TROUBLE CODE FLOW TABLE

According to Diagnostic flow table for the diagnostic trouble code confirmation in Step 3, locate the cause of the trouble, namely in a sensor, switch, wire harness, connector, actuator assembly or other part and repair or replace faulty parts.

5. “DIAGNOSIS” IN “BRAKE” SECTION

Check the parts or system suspected as a possible cause referring to “Diagnosis” in “BRAKE” section and based on symptoms appearing on the vehicle (symptom obtained through Steps 1-i, 1-ii and 2 and repair or replace faulty parts, if any).

6. CHECK FOR INTERMITTENT PROBLEM

Check parts where an intermittent trouble is easy to occur (e.g., wire harness, connector, etc.), referring to INTERMITTENT TROUBLE in “GENERAL INFORMATION” section and related circuit of trouble code recorded in Step 1-iii.

7. FINAL CONFIRMATION TEST

Confirm that the problem symptom has gone and the ABS is free from any abnormal conditions. If what has been repaired is related to the malfunction DTC, clear the DTC once and perform test driving and confirm that no DTC is indicated.

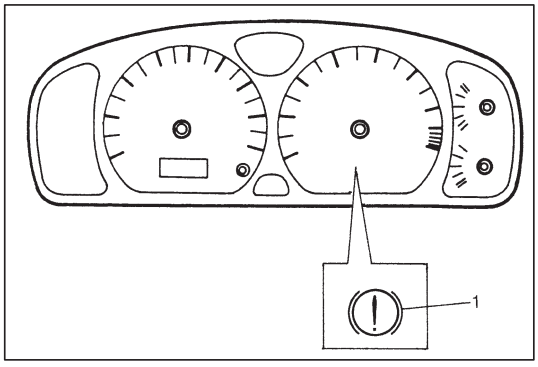

BRAKE WARNING LAMP CHECK

NOTE:
Perform this check on a level place.

1) Turn ignition switch ON with parking brake applied.
2) Check that brake warning lamp (1) is turned ON.
3) Release parking brake with ignition switch ON and check that brake warning lamp goes off.
   If it doesn't go off, go to "TABLE-E" in this section.

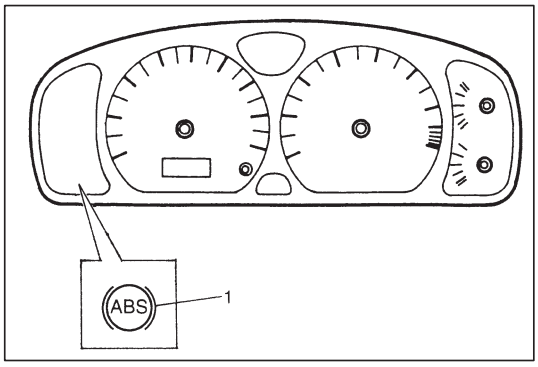

"ABS" WARNING LAMP CHECK

1) Turn ignition switch ON.
2) Check that "ABS" warning lamp (1) comes ON for about 2 seconds and then goes off.
   If any faulty condition is found, advance to Diagnostic Flow Table-A, B, C or D.

TABLE – A "ABS" WARNING LAMP CIRCUIT CHECK – LAMP DOES NOT COME "ON" AT IGNITION SWITCH ON

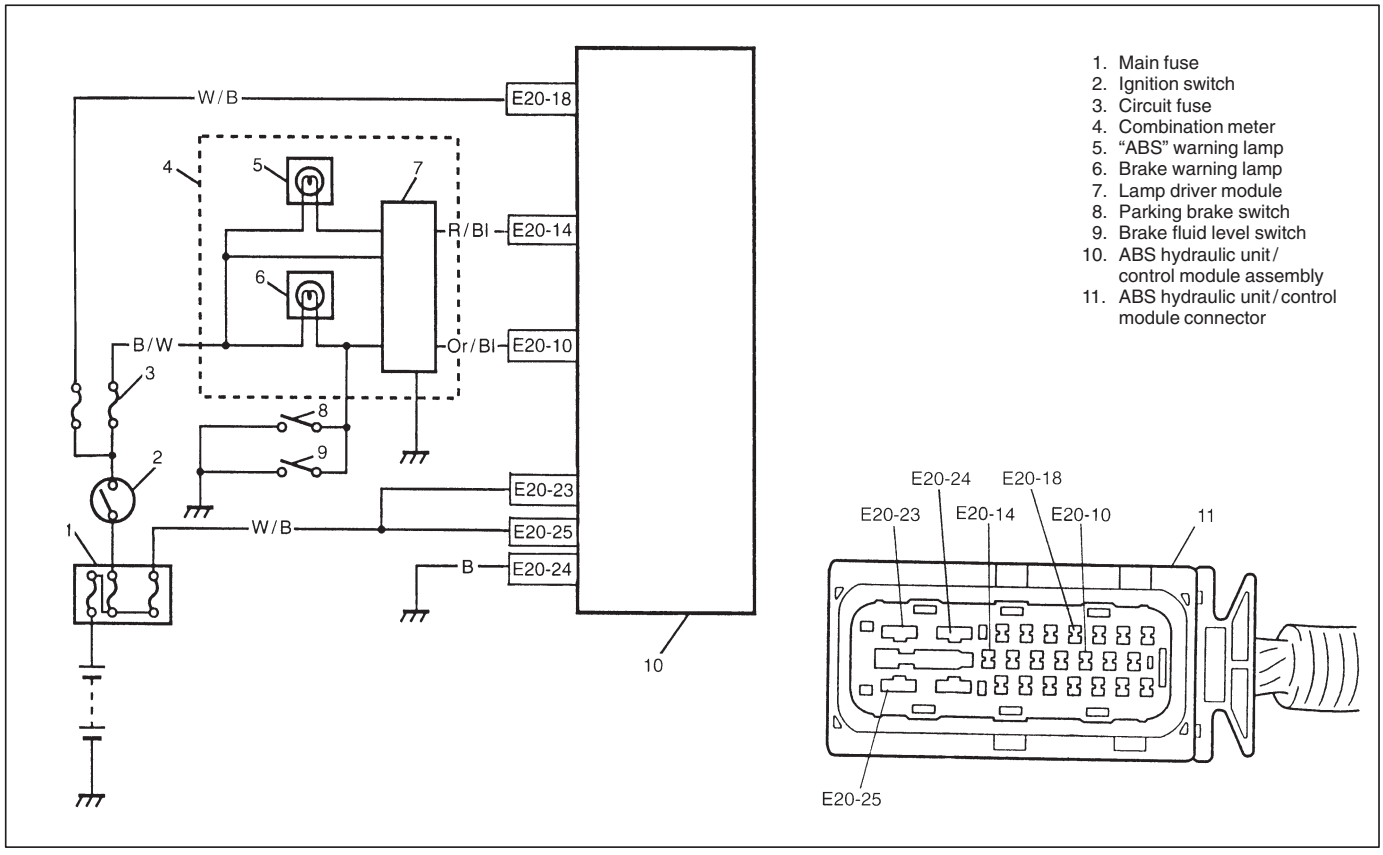

CIRCUIT DESCRIPTION

Operation (ON/OFF) of "ABS" warning lamp is controlled by ABS control module through lamp driver module in combination meter.

If the Antilock brake system is in good condition, ABS control module turns "ABS" warning lamp ON at the ignition switch ON, keeps it ON for 2 seconds and then turns it OFF. If an abnormality in the system is detected, "ABS" warning lamp is turned ON continuously by ABS control module. Also, it is turned ON continuously by lamp driver module when the connector of ABS control module is disconnected.

INSPECTION

STEP	ACTION	YES	NO
1	1) Turn ignition switch ON. Do other warning lamp come ON?	Go to Step 2.	Go to Step 4.
2	1) Disconnect ABS hydraulic unit/control module connector. Does ABS warning lamp light with ignition switch ON?	Substitute a known-good ABS hydraulic unit/control module assembly and recheck.	Go to Step 3.
3	1) Remove combination meter. Is bulb of ABS warning lamp in good condition?	"R/Bl" circuit shorted to ground. If OK, replace combination meter (lamp driver module).	Replace bulb.
4	Is IG fuse in good condition?	Open in "B/W" wire to combination meter or poor connection.	Repair and replace.

TABLE – B "ABS" WARNING LAMP CIRCUIT CHECK – LAMP COMES "ON" STEADY

Refer to TABLE – A for System Circuit Diagram and Circuit Description.

INSPECTION

STEP	ACTION	YES	NO
1	Perform diagnostic trouble code check. Is there any DTC (including code No.12, NO CODES on SUZUKI scan tool) exists?	Go to Step 2.	Go to Step 3.
2	Does malfunction DTC (other than code No.12) exist at step 1?	Go to Step 7 of "ABS Diagnostic Flow Table" in this section.	Go to Step 3.
3	1) Disconnect ABS hydraulic unit/control module connector. 2) Check for proper connection to ABS hydraulic unit/control module connector at terminals "E20-14", "E20-18" and "E20-24". 3) If OK then ignition switch "ON" and measure voltage at terminal E20-18 of connector. Is it 10 – 14 V?	Go to Step 4.	"B/W" circuit open.
4	1) With ABS hydraulic unit/control module connector disconnected, turn ignition switch ON and light ABS warning lamp. 2) Connect terminal "E20-14" of disconnected connector to ground using service wire. Does ABS warning lamp turn off?	Go to Step 5.	"R/Bl" circuit open. If wire and connection are OK, replace combination meter (lamp driver module).
5	1) Measure resistance from connector terminal "E20-24" to body ground. Is continuity indicated?	Substitute a known-good ABS hydraulic unit/control module assembly and recheck.	"B" circuit open.

TABLE – C "ABS" WARNING LAMP CIRCUIT CHECK – THE LAMP FLASHES CONTINUOUSLY WHILE IGNITION SWITCH IS ON

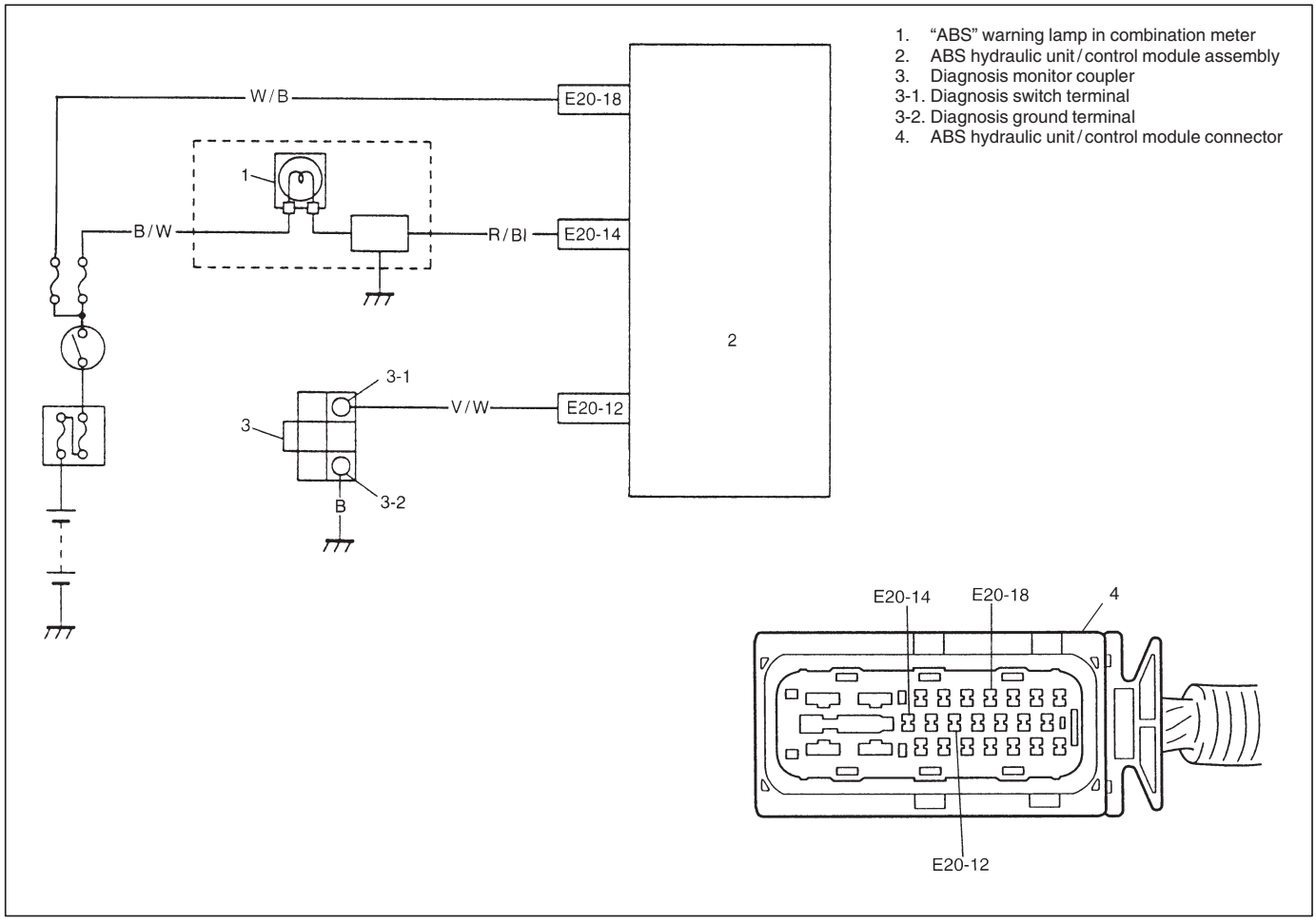

CIRCUIT DESCRIPTION

When diagnosis switch terminal is shorted or connected to the ground with ignition switch ON, diagnosis trouble code (DTC) is indicated by flashing of "ABS" warning lamp only in the following cases.

- Normal DTC (12) is indicated if no malfunction DTC is detected in the ABS.
- A history malfunction DTC is indicated by flashing of the lamp if a current malfunction DTC is not detected at that point although a history malfunction DTC is stored in memory.

INSPECTION

STEP	ACTION	YES	NO
1	Is diagnosis switch terminal connected to ground via service wire?	Go to Step 3.	Go to Step 2.
2	1) Ignition switch ON. 2) Measure voltage between diagnosis switch terminal and ground. Is it 10 – 14 V?	Substitute a known-good ABS hydraulic unit/control module assembly and recheck.	"V/W" wire circuit shorted to ground.
3	1) Ignition switch ON. 2) Does flashing of ABS warning lamp indicate DTC?	Go to Step 7 of "ABS diagnostic flow table" in this section.	Substitute a known-good ABS hydraulic unit/control module assembly and recheck.

TABLE – D CODE (DTC) IS NOT OUTPUTTED EVEN WITH DIAGNOSIS SWITCH TERMINAL CONNECTED TO GROUND.

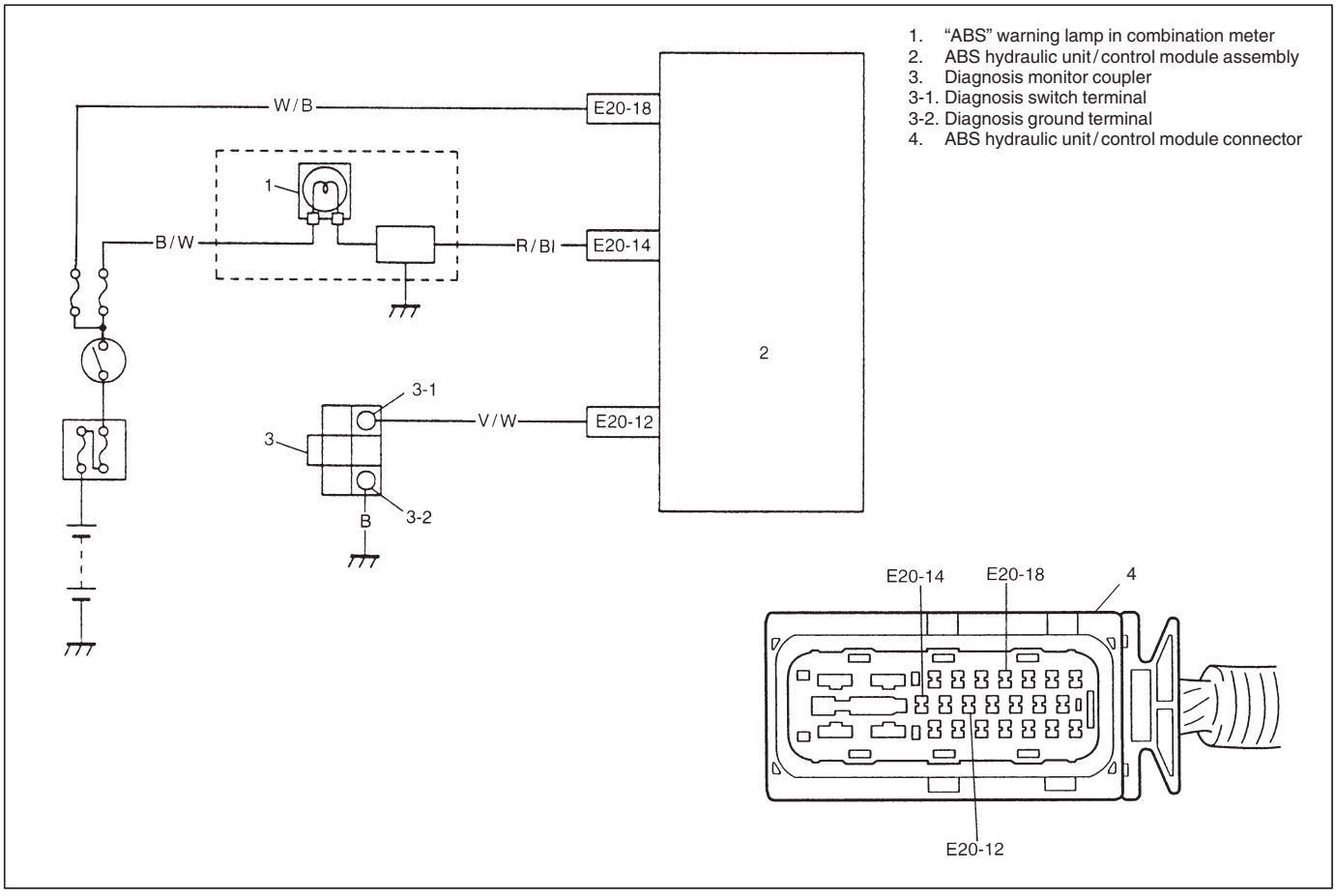

CIRCUIT DESCRIPTION

When diagnosis switch terminal is connected to ground with ignition switch turned ON, the ABS control module outputs diagnostic trouble code by flashing "ABS" warning lamp.

INSPECTION

STEP	ACTION	YES	NO
1	Is it shorted diagnosis switch terminal and ground terminal by service wire properly?	Go to Step 2.	Connect service wire securely.
2	1) Disconnect service wire. 2) Disconnect ABS hydraulic unit/control module connector. 3) Measure resistance between diagnosis switch terminal and connector terminal "E20-12". Is it infinite (∞)?	"V/W" circuit open.	Go to Step 3.
3	1) Measure resistance between ground terminal of monitor coupler and body ground. Is continuity indicated?	Go to Step 4.	"B" circuit open or poor connection.
4	1) Check for proper connection to ABS hydraulic unit/control module at terminal "E20-12". 2) If OK, then check "ABS" warning lamp circuit referring to TABLE A and B. Is it in good condition?	Substitute a known-good ABS hydraulic with/control module assembly and recheck.	Repair "ABS" warning lamp circuit.

TABLE – E BRAKE WARNING LAMP CHECK-LAMP COMES “ON” STEADY

CIRCUIT DESCRIPTION

Brake warning lamp is controlled by parking brake switch, brake fluid level switch and ABS control module/hydraulic unit assembly through lamp driver module in combination meter. Refer to “TABLE-A” for circuit diagram.

STEP	ACTION	YES	NO
1	1) Make sure that: ● Parking brake is completely released. ● Brake fluid level is upper than the minimum level. Are the check results OK?	Go to Step 2.	Release parking brake completely and/or replenish brake fluid.
2	Does “ABS” warning lamp come on?	Perform “TABLE B” previously outlined.	Go to Step 3.
3	1) Disconnect ABS hydraulic unit/control module connector. 2) Check for proper connection to ABS hydraulic unit/control module connector at terminals “E20-10”. 3) If OK, apply chocks to wheels and select gear in neutral position (P range for A/T). 4) Keep brake pedal depressed and start engine. Release parking brake. 5) Connect terminal “E20-10” of disconnected connector to ground using service wire. Does brake warning lamp turn off?	Substitute a known-good ABS hydraulic unit/control module assembly and recheck.	“Or/Bl” circuit open. If wire and connection are OK, replace combination meter.

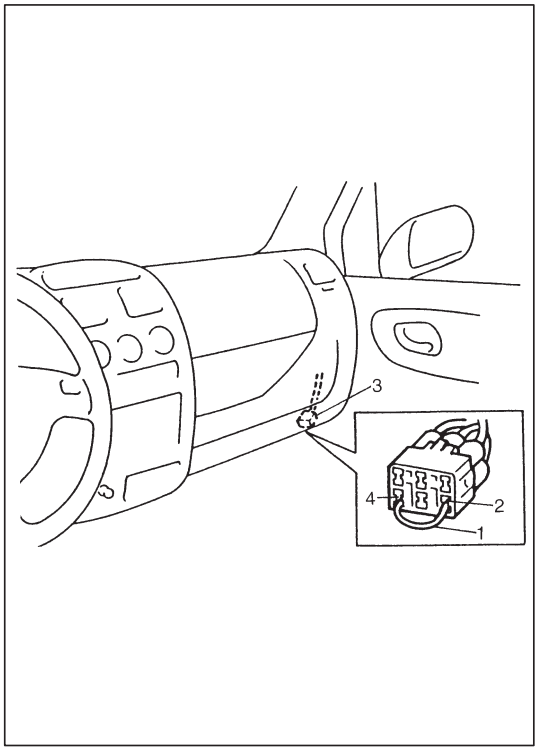

DIAGNOSTIC TROUBLE CODE (DTC) CHECK (USING “ABS” WARNING LAMP)

1) Perform “ABS” WARNING LAMP CHECK described above.
2) Using service wire (1), connect diagnosis switch terminal (2) of monitor coupler (3) to ground (4).
3) Turn ignition switch ON.
4) Read flashing of “ABS” warning lamp which represents DTC as shown in example below and write it down. When more than 2 DTCs are stored in memory, flashing for each DTC is repeated three times starting with the smallest DTC number in increasing order.
   For details of DTC, refer to “DTC Table”.

Example : When right-front wheel speed sensor circuit opens (DTC 21)

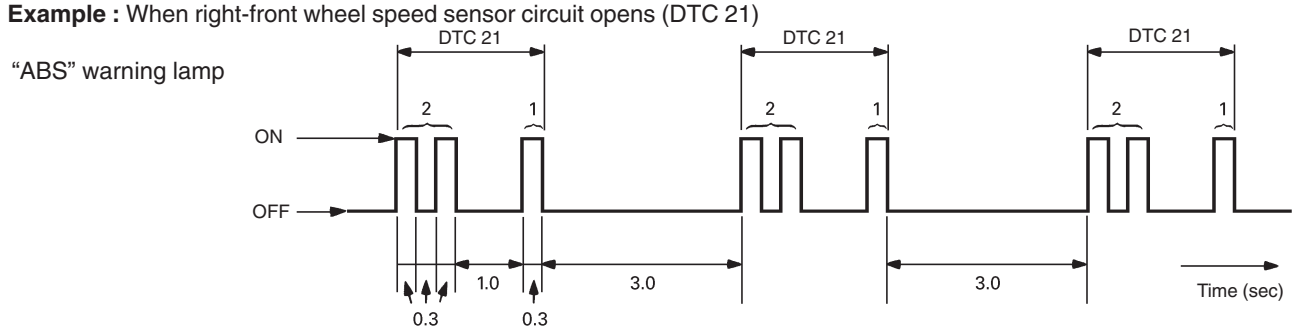

5) After completing the check, turn ignition switch off, disconnect service wire from monitor coupler.

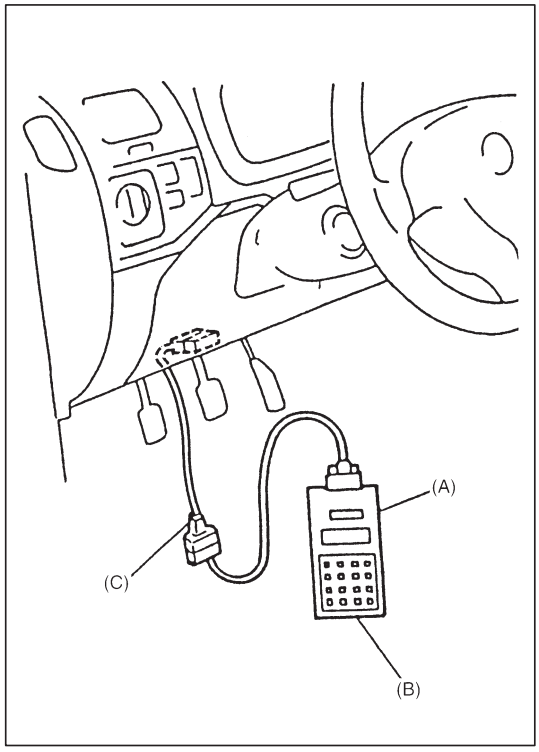

DIAGNOSTIC TROUBLE CODE (DTC) CHECK (USING SUZUKI SCAN TOOL)

1) After setting cartridge for ABS to SUZUKI scan tool, connect SUZUKI scan tool to data link connector.

   Special Tool
   (A): 09931-76011 (SUZUKI scan tool)
   (B): Mass storage cartridge
   (C): 09931-76030 (16/14 pin DLC cable)

2) Turn ignition switch ON.
3) Read DTC according to instructions displayed on SUZUKI scan tool and print it or write it down. Refer to SUZUKI scan tool operator's manual for further details.
4) After completing the check, turn ignition switch off and disconnect SUZUKI scan tool from DLC.

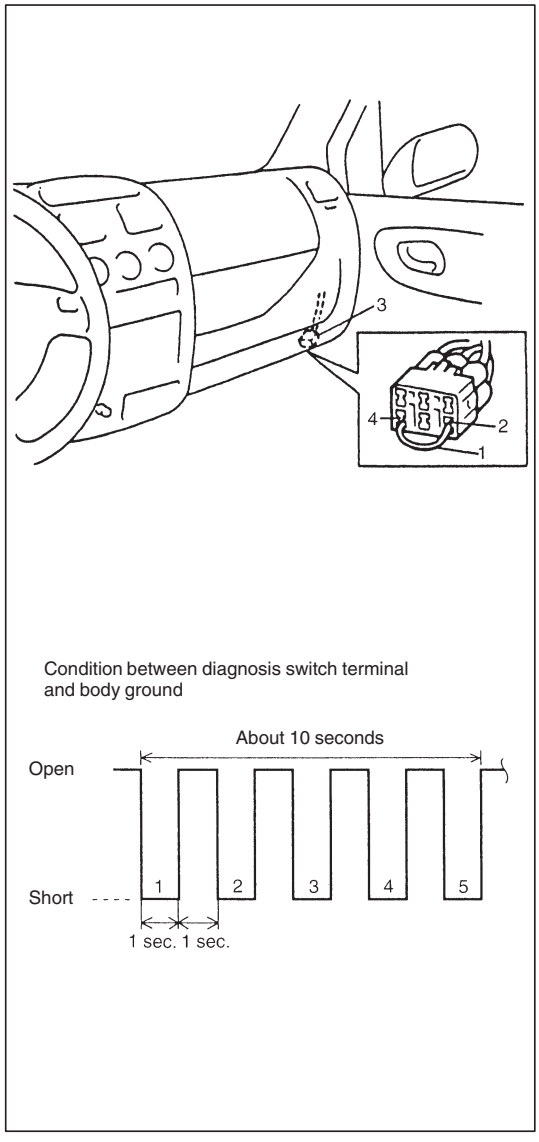

DIAGNOSTIC TROUBLE CODE (DTC) CLEARANCE

WARNING:
When performing a driving test, select a safe place where there is neither any traffic nor any traffic accident possibility and be very careful during testing to avoid occurrence of an accident.

After repair or replace malfunction part(s), clear all DTCs by performing the following procedure.

1) Turn ignition switch OFF.
2) Using service wire (1), connect diagnosis switch terminal (2) of diagnosis monitor coupler (3) to ground terminal (4).
3) With connection described in above step 2) maintained, turn ignition switch ON.
4) Repeat disconnecting and reconnecting of service wire between diagnosis and ground terminals 5 times or more at about 1sec. interval within 10 seconds.
5) Turn ignition switch OFF and disconnect service wire from monitor coupler.
6) Perform "DRIVING TEST" (step 2 of "ABS DIAGNOSTIC FLOW TABLE" in this section) and DTC CHECK and confirm that normal DTC (DTC 12) is displayed; not malfunction DTC.

   NOTE:
   It is also possible to clear DTC by using SUZUKI scan tool. Refer to Cartridge Manual for procedure to clear DTC.

DIAGNOSTIC TROUBLE CODE (DTC) TABLE

CAUTION:

Be sure to perform "ABS DIAGNOSTIC FLOW TABLE" before starting diagnosis.

DTC (displayed on SUZUKI scan tool)	DTC (indicated by "ABS" warning lamp)	ABS warning lamp flashing pattern	DIAGNOSTIC ITEMS	
NO DTC	12	1 2	Normal	
C1021	21	2 1	RF	Wheel speed sensor circuit
C1025	25	2 5	LF	
C1031	31	3 1	RP	
C1035	35	3 5	LR	
C1022	22	2 2	RF	Wheel speed sensor circuit or sensor ring
C1026	26	2 6	LF	
C1032	32	3 2	RR	
C1036	36	3 6	LR	
C1041	41	4 1	RF	Inlet solenoid valve circuit
C1042	42	4 2		Outlet solenoid valve circuit
C1045	45	4 5	LF	Inlet solenoid valve circuit
C1046	46	4 6		Outlet solenoid valve circuit
C1051	51	5 1	RR	Inlet solenoid valve circuit
C1052	52	5 2		Outlet solenoid valve circuit
C1055	55	5 5	LR	Inlet solenoid valve circuit
C1056	56	5 6		Outlet solenoid valve circuit
C1057	57	5 7	Power source	
C1061	61	6 1	ABS pump motor and/or motor relay circuit	
C1063	63	6 3	Fail safe-relay	
C1071	71	7 1	ABS control module	

DTC 21, 22 – RIGHT-FRONT WHEEL SPEED SENSOR CIRCUIT OR SENSOR RING
25, 26 – LEFT-FRONT WHEEL SPEED SENSOR CIRCUIT OR SENSOR RING
31, 32 – RIGHT-REAR WHEEL SPEED SENSOR CIRCUIT OR SENSOR RING
35, 36 – LEFT-REAR WHEEL SPEED SENSOR CIRCUIT OR SENSOR RING

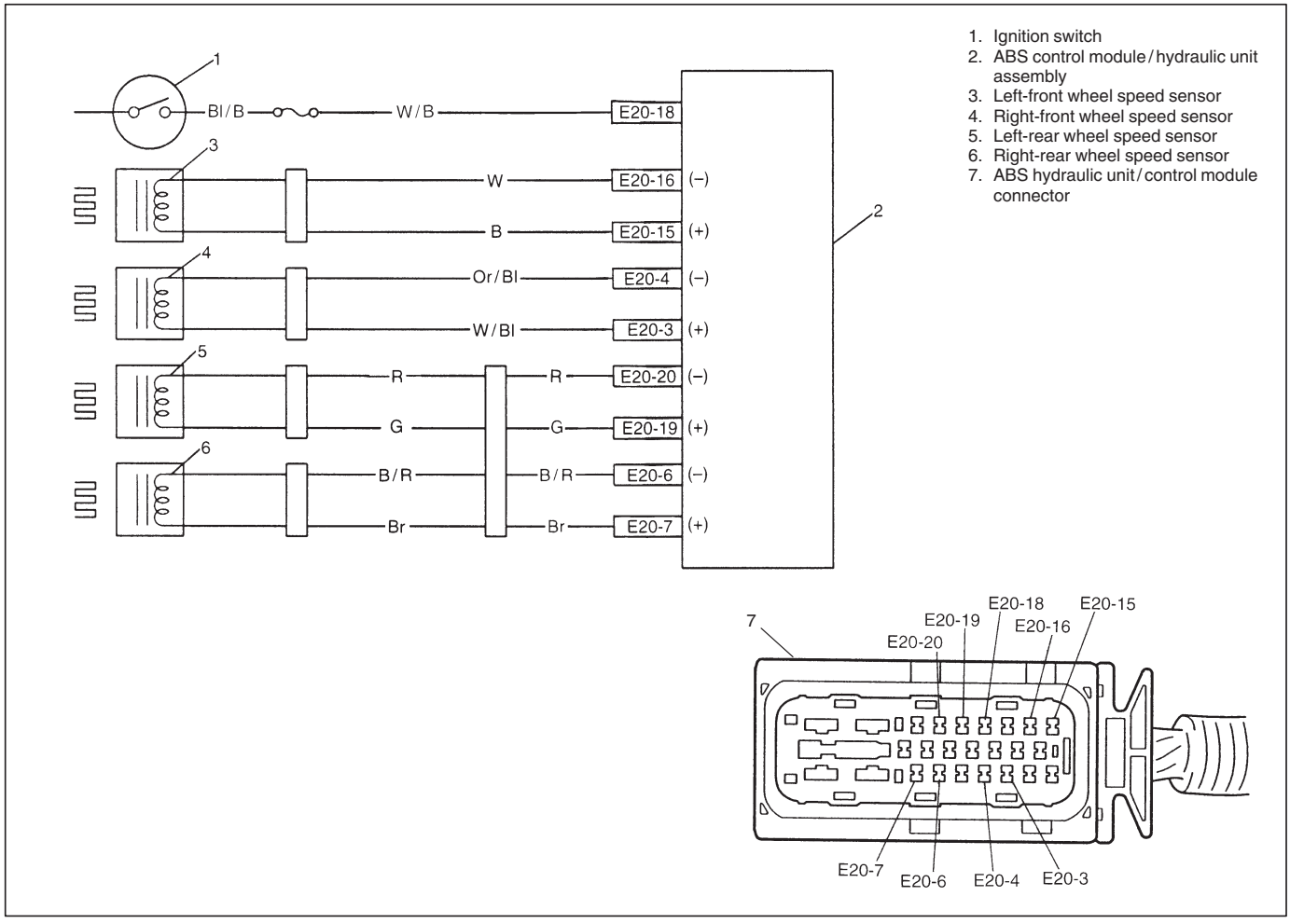

DESCRIPTION

The ABS control module monitors the voltage at the terminal of each sensor while the ignition switch is ON. When the voltage is not within the specified range, an applicable DTC will be set. Also, when no sensor signal is inputted at starting or while running, an applicable DTC will be set.

NOTE:

When the vehicle was operated in any of the following ways, one of these DTCs may be set even when the sensor is in good condition. If such possibility is suspected, repair the trouble (dragging of brake, etc.) of the vehicle, clear DTC once and then after performing the driving test as described in Step 2 of "ABS DIAGNOSIS FLOW TABLE", check whether or not any abnormality exists.

– The vehicle was driven with parking brake pulled.
– The vehicle was driven with brake dragging.
– Wheel spin occurred while driving.
– Wheel(s) was turned while the vehicle was jacked up.
– The vehicle was stuck.

DTC 21, 22, 25, 26, 31, 32, 35 or 36

INSPECTION

STEP	ACTION	YES	NO
1	1) Disconnect applicable ABS wheel speed sensor coupler with ignition switch OFF. 2) Measure resistance between terminals of ABS wheel speed sensor. Refer to “Front Wheel Speed Sensor” and/or “Rear Wheel Speed Sensor” under “ON-VEHICLE SERVICE” in this section. Is measured resistance value as specified?	Go to Step 2.	Replace ABS wheel speed sensor assembly.
2	1) Turn ignition switch OFF. 2) Disconnect ABS hydraulic unit/control module connector. 3) Check for proper connection to ABS control module at each sensor terminal. 4) If OK, then turn ignition switch ON and measure voltage between sensor terminal of module connector and body ground. Is it 0V?	Go to Step 3.	ABS wheel speed sensor circuit shorted to power.
3	1) Turn ignition switch OFF. 2) Connect ABS wheel speed sensor coupler. 3) Measure resistance between the following points. ● Both ABS hydraulic unit/control module connector terminals of the corresponding sensor. This check result should be the same as above STEP 1. ● Either terminal of wheel speed sensor coupler and body ground. This check result should be no continuity. Are both check results OK?	Go to Step 4.	Circuit open or shorted to ground.
4	1) Remove applicable ABS wheel speed sensor. 2) Check sensor for damage or foreign material attached. Is it in good condition?	Go to Step 5.	Clean, repair or replace.
5	Check front and/or rear sensor ring for the following (remove rear drum as necessary): ● Rotor serration (teeth) neither missing nor damaged. ● No foreign material being attached. ● Rotor not being eccentric. ● Wheel bearing free from excessive play. Are they in good condition?	Go to Step 6.	Clean, repair or replace.
6	1) Install ABS wheel speed sensor to knuckle. 2) Tighten sensor bolt to specified torque and check that there is no clearance between sensor and knuckle. Is it OK?	Go to Step 7.	Replace ABS wheel speed sensor.
7	Referring to “Front Wheel Speed Sensor Reference” and/or “Rear Wheel Speed Sensor Reference” in this section, check output voltage or waveform. Is specified voltage and/or waveform obtained?	Substitute a known-good ABS hydraulic unit/control module assembly and recheck.	Replace sensor and recheck.

DTC 41 – RIGHT-FRONT INLET SOLENOID CIRCUIT
45 – LEFT-FRONT INLET SOLENOID CIRCUIT
51 – RIGHT-REAR INLET SOLENOID CIRCUIT
55 – LEFT-REAR INLET SOLENOID CIRCUIT
42 – RIGHT-FRONT OUTLET SOLENOID CIRCUIT
46 – LEFT-FRONT OUTLET SOLENOID CIRCUIT
52 – RIGHT-REAR OUTLET SOLENOID CIRCUIT
56 – LEFT-REAR OUTLET SOLENOID CIRCUIT

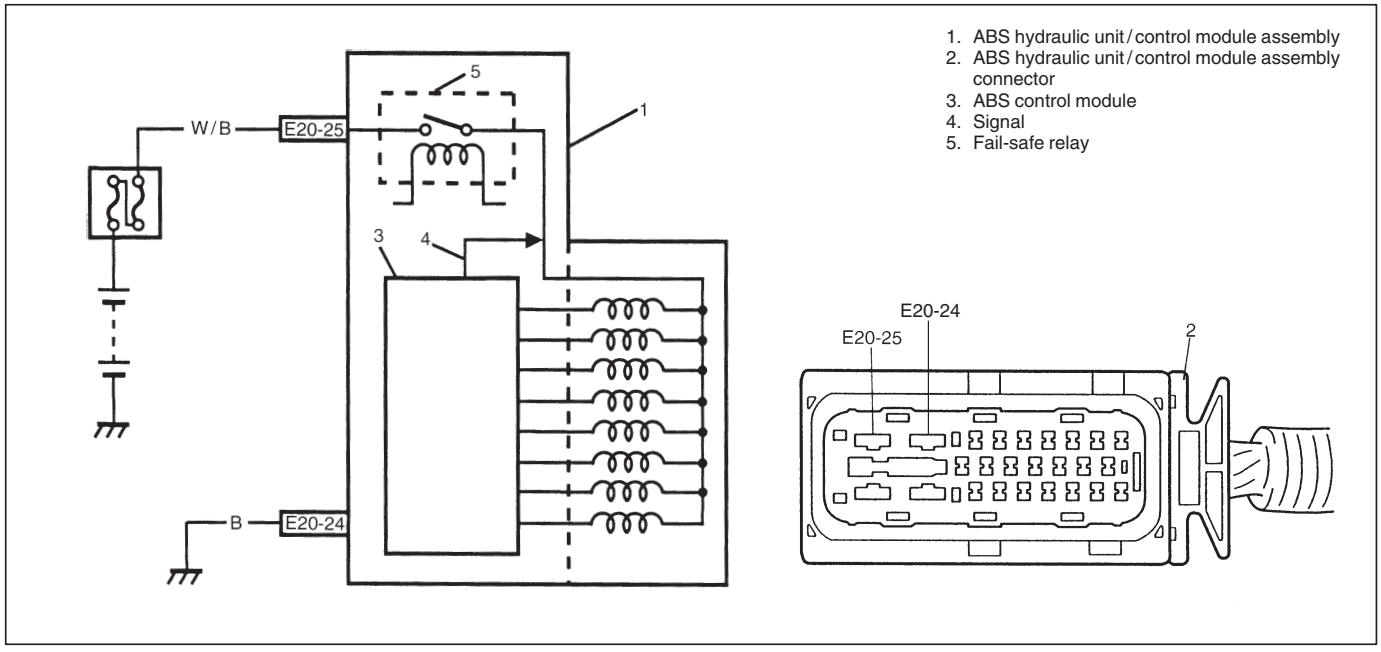

DESCRIPTION

The ABS control module monitors the output from the valve.
When the output of each valve exceeds the specified value compared with the signal sent from ABS control module, this DTC is set.

DTC 41, 45, 51, 55, 42, 46, 52, 56 – SOLENOID CIRCUIT

INSPECTION

STEP	ACTION	YES	NO
1	1) Check solenoid operation referring to item “ABS HYDRAULIC UNIT OPERATION CHECK” in this section. Is it in good condition?	Check terminal “E20-25” connection. If connection is OK, substitute a known-good ABS hydraulic unit/control module assembly and recheck.	Go to Step 2.
2	1) Ignition switch “OFF”. 2) Disconnect ABS hydraulic unit/control module connector. 3) Check for proper connection to ABS hydraulic unit/control module connector at terminal “E20-25”. 4) If OK, then measure voltage between terminal “E20-25” of module connector and “E20-24”. Is it 10 – 14 V?	Substitute a known-good ABS hydraulic unit/control module assembly and recheck.	“W/B” or “B” circuit open.

DTC 57 – POWER SOURCE CIRCUIT

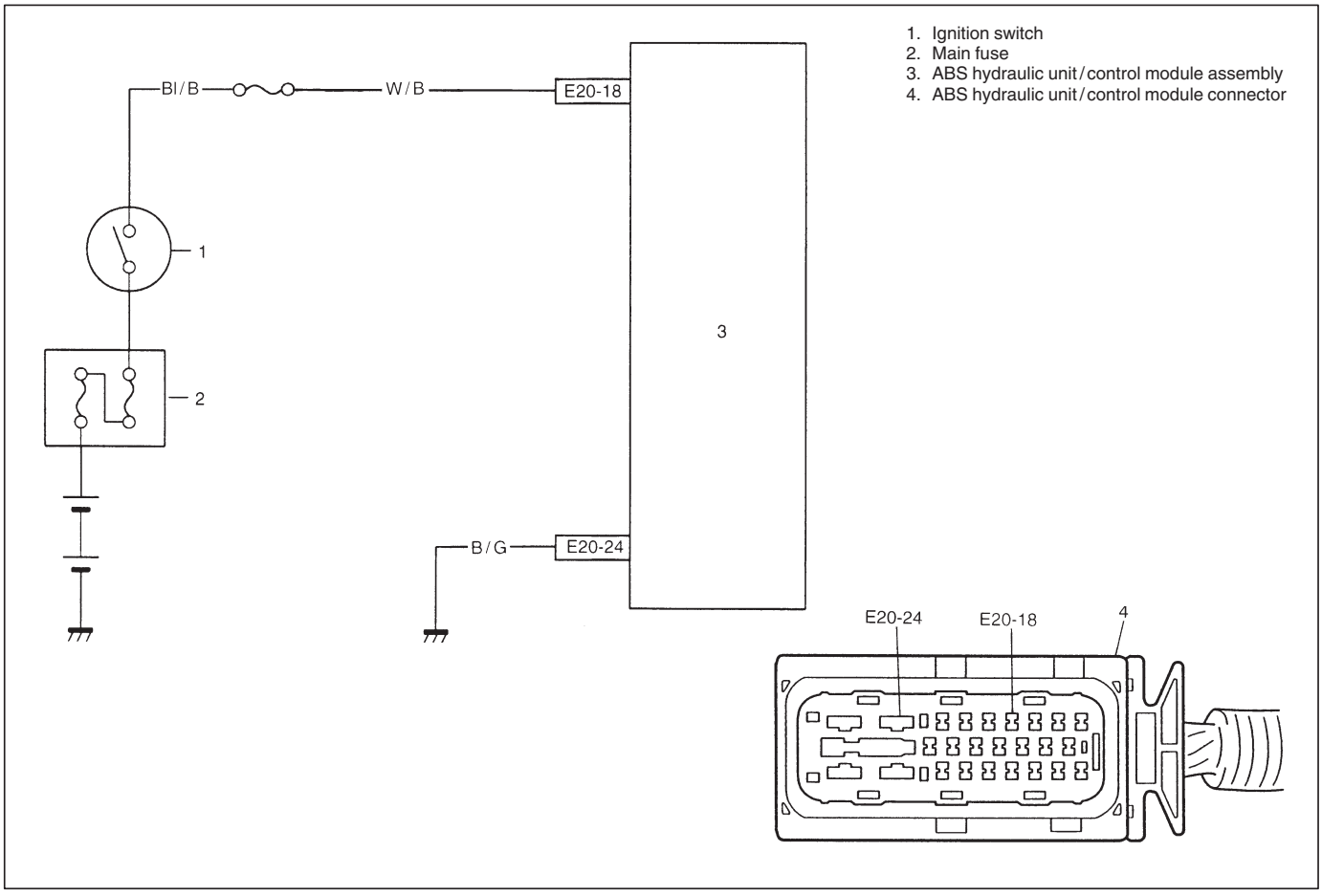

DESCRIPTION

The ABS control module monitors the power source voltage at terminal “E20-18”. When the power source voltage becomes extremely high or low, this DTC will be set. As soon as the voltage rises or lowers to the specified level, the set DTC will be cleared.

INSPECTION

STEP	ACTION	YES	NO
1	1) Connect a voltmeter between battery positive (+) terminal and body ground. 2) Start the engine and measure the maximum voltage when racing the engine. Is it over 18V?	Check charging system referring to “CHARGING SYSTEM” section.	Go to Step 2.
2	1) Disconnect ABS hydraulic unit/control module connector. 2) Keep the engine idling, measure the voltage between terminal “E20-18” of ABS control module and body ground. Is it always under 9V?	● Check charging system referring to “CHARGING SYSTEM” section. ● Imperfect short between wire “B/W” and ground.	● Poor connection of terminal “E20-18” or “E20-24” of the ABS control module. If the above are in good condition, substitute a known-good ABS hydraulic unit/control module and recheck.

DTC 61 – ABS PUMP MOTOR CIRCUIT

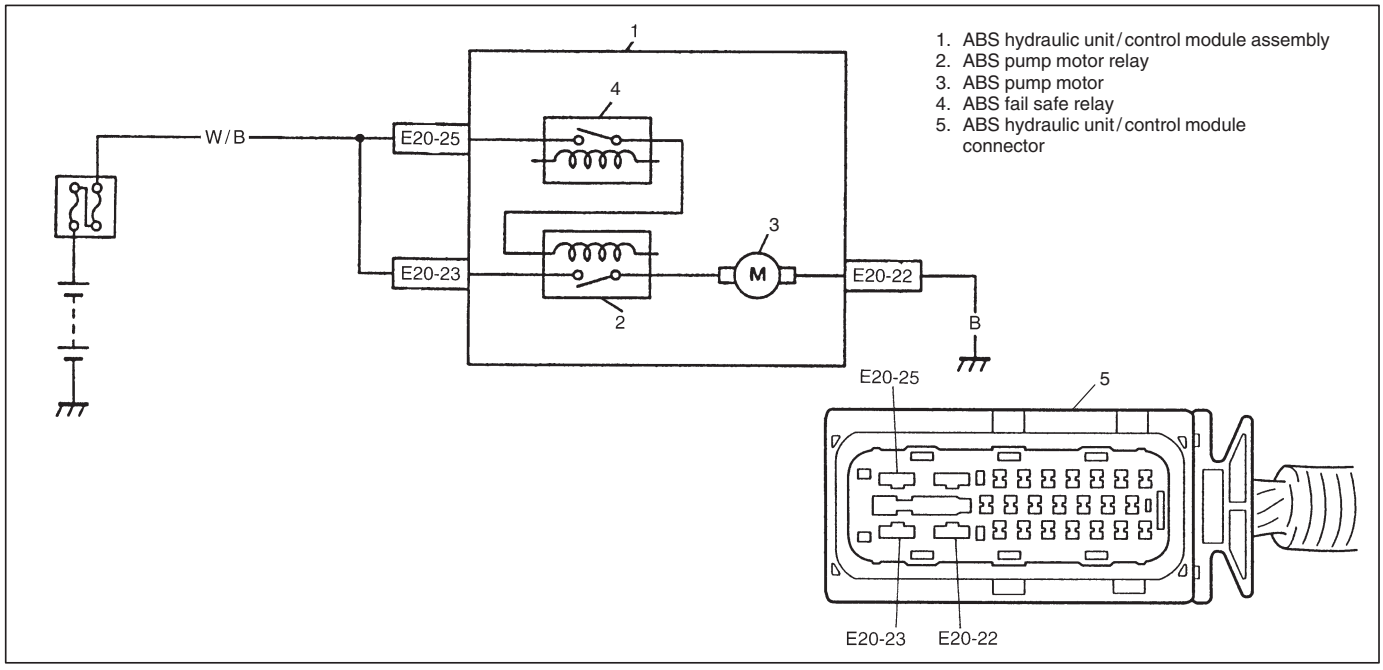

DESCRIPTION

The ABS control module monitors the voltage at monitor terminal of pump motor circuit constantly with the ignition switch turned ON. It sets this DTC when the voltage at the monitor terminal does not become high/low according to ON/OFF commands to the motor relay of the module (does not follow these commands).

INSPECTION

STEP	ACTION	YES	NO
1	1) Check pump motor referring to item “ABS HYDRAULIC UNIT OPERATION CHECK” in this section. Is it in good condition?	Check terminals “E20-25” and “E20-23” connection. If connections OK, substitute a known-good ABS hydraulic unit/control module assembly and recheck.	Go to Step 2.
2	1) Ignition switch OFF. 2) Disconnect ABS hydraulic unit/control module connector. 3) Check for proper connection to ABS hydraulic unit/control module connector at terminal “E20-23”. 4) If OK, then measure voltage between terminal “E20-23” of module connector and body ground. Is it 10 – 14 V?	Go to Step 3.	“W/B” circuit open.
3	Measure resistance between terminal “E20-22” of ABS hydraulic unit/control module connector and body ground. Is it infinite (∞)?	“B” circuit open .	Substitute a known-good ABS hydraulic unit/control module assembly and recheck.

DTC 63 – ABS FAIL-SAFE RELAY CIRCUIT

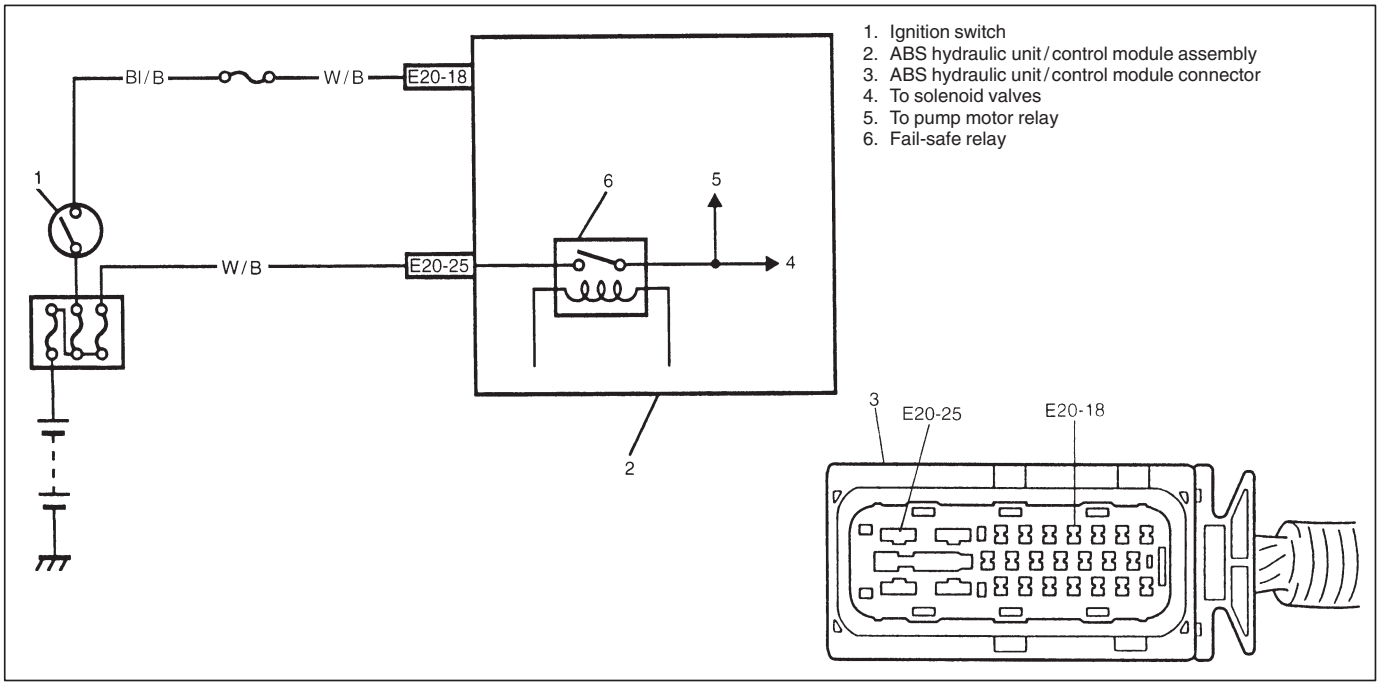

DESCRIPTION

ABS control module monitors the voltage at the terminal of solenoid circuit constantly with ignition switch turned ON. Also, immediately after ignition switch is turned “ON”, perform initial check as follows.
Switch fail-safe relay in the order of OFF → ON and check if voltage changes to Low → High. If anything faulty is found in the initial check and when the voltage is low with ignition switch turned ON, this DTC will be set.

INSPECTION

STEP	ACTION	YES	NO
1	Check battery voltage. Is it about 11 V or higher?	Go to Step 2.	Check charging system referring to “CHARGING SYSTEM” section.
2	Check ABS main fuse and connection. Is it in good condition?	Go to Step 3.	Repair and/or replace fuse.
3	1) Ignition switch OFF. 2) Disconnect ABS hydraulic unit/control module connector. 3) Check proper connection to ABS hydraulic unit/control module at terminal “E20-25”. 4) If OK, then measure voltage between connector terminal “E20-25” and body ground. Is it 10 – 14 V?	Substitute a known-good ABS hydraulic unit/control module assembly and recheck.	“W/B” circuit open or short to ground.

DTC 71 – ABS CONTROL MODULE

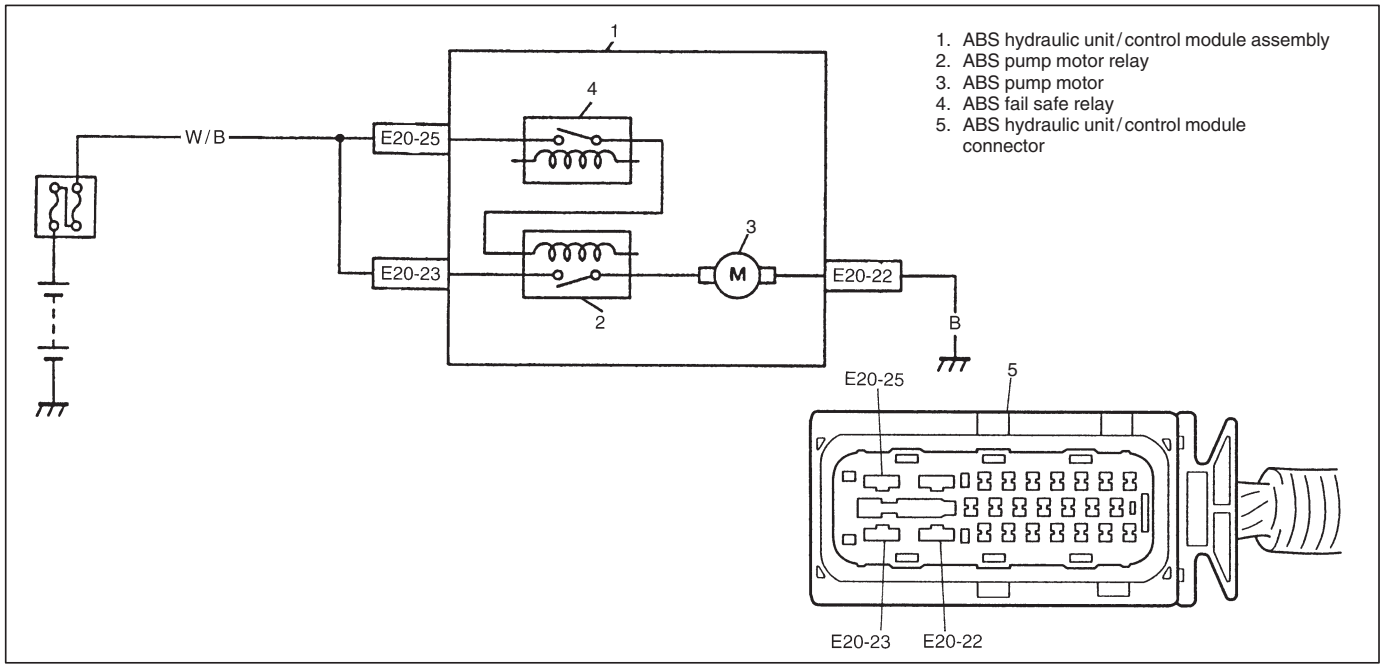

DESCRIPTION

This DTC will be set when an internal malfunction is detected in the ABS control module.

INSPECTION

STEP	ACTION	YES	NO
1	Clear all DTCs and check DTC. Is it DTC 71?	Go to Step 2.	Could be a temporary malfunction of the ABS control module.
2	1) Check proper connection of ABS hydraulic unit/control module connector 2) If OK, disconnect ABS hydraulic unit/control module connector and check the followings. ● Voltage “E20-25” terminal: 10 – 14 V ● Resistance between “E20-24” and body ground: Continuity Are the check result as specified above?	Replace ABS hydraulic unit/control module assembly.	Repair and recheck.

ON-VEHICLE SERVICE

PRECAUTION

When connector is connected to ABS hydraulic unit/control module assembly, do not disconnect connectors of sensors with ignition switch ON. Then DTC will be set in ABS control module.

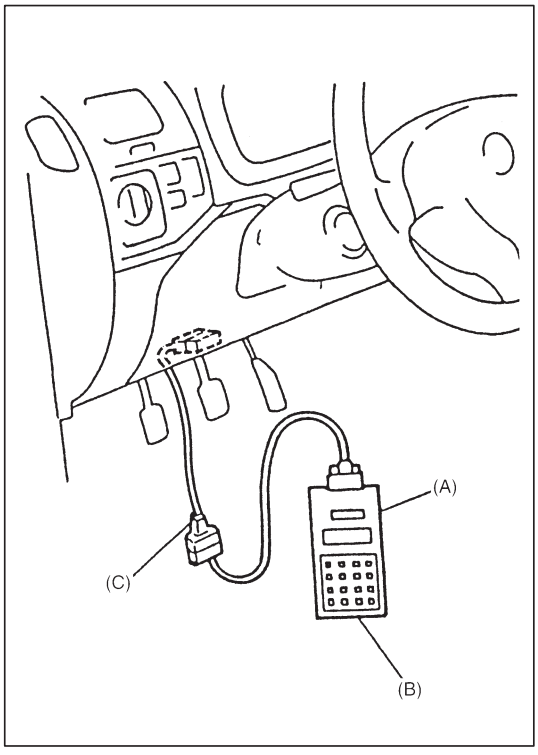

ABS HYDRAULIC UNIT OPERATION CHECK (USING SUZUKI SCAN TOOL)

1) Remove steering column hole cover.
2) Connect SUZUKI scan tool (Tech-1) to data link connector (DLC) (1) with ignition switch OFF.

   Special Tool
   (A): 09931-76011 (SUZUKI scan tool)
   (B): Mass storage cartridge
   (C): 09931-76030 (16/14 pin DLC cable)

3) Turn ignition switch to ON position and check actuator operation using “HYDRAULIC CONTROL TEST” under “miscellaneous test” (“MISC. TEST”) mode of SUZUKI scan tool.

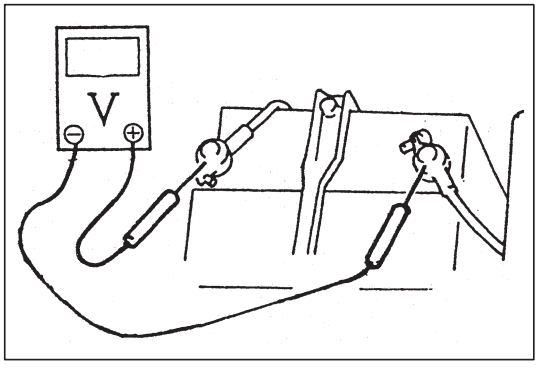

ABS HYDRAULIC UNIT OPERATION CHECK (NOT USING SUZUKI SCAN TOOL)

1) Check that basic brake system other than ABS is in good condition.
2) Check that battery voltage is 11V or higher.
3) With “ABS” warning lamp, check that no abnormality is detected in ABS. Refer to “DIAGNOSTIC TROUBLE CODE (DTC) CHECK” in this section.
4) Lift up vehicle.

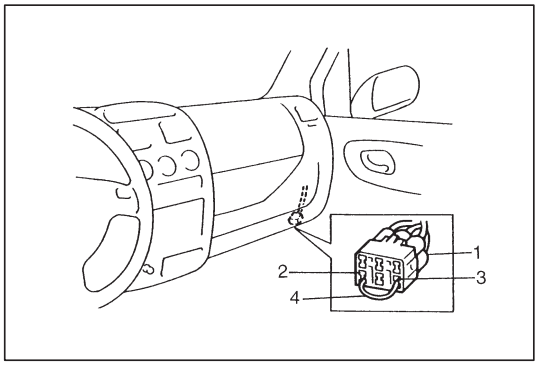

5) Set transmission to neutral and release parking brake.
6) Turn each wheel gradually by hand to check if brake dragging occurs. If it does, correct.
7) With diagnosis switch terminal (1) of monitor coupler (2) connected to ground terminal (3) using service wire (4), turn ignition switch ON and check if “ABS” warning lamp indicates DTC 12. If malfunction DTC is indicated, repair it first.
8) Turn ignition switch “OFF”.

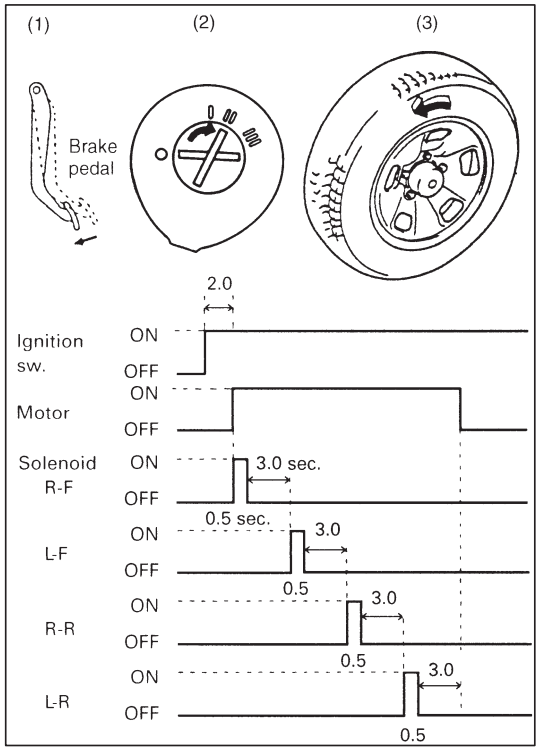

9) Perform the following checks with help of another person.
Brake pedal should be depressed and then ignition switch turned ON by one person and wheel should be turned by another person's hand. At this time, check that:
- Operation sound of solenoid is heard and wheel turns only about 0.5 sec. (Brake force is depressurized).
- Operation sound of pump motor is heard and pulsation is felt at brake pedal.

10) If all 4-wheels cannot be checked during one ignition cycle (OFF → ON), repeat Steps 8) and 9) till all 4 wheels are checked.
If a faulty condition is found in Steps 9) and 10), replace hydraulic unit/control module assembly.

11) Turn ignition switch "OFF" and remove service wire from monitor coupler.

ABS HYDRAULIC UNIT/CONTROL MODULE ASSEMBLY

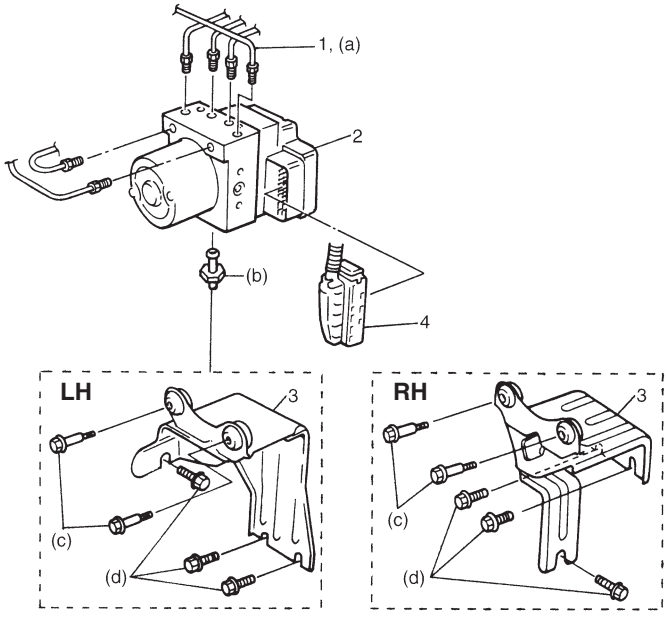

CAUTION:
Never disassemble ABS hydraulic unit/control module assembly, loosen blind plug or remove motor.
Performing any of these prohibited services will affect original performance of ABS hydraulic unit/control module assembly.

Tightening Torque	N·m	(kg-m,	lb-ft)
(a): Brake pipe flare nut	16	(1.6,	11.5)
(b): ABS hydraulic unit/control module assembly support	9	(0.9,	6.5)
(c): ABS hydraulic unit/control module assembly mount bolts	9	(0.9,	6.5)
(d): ABS hydraulic unit/control module assembly bracket bolts	26	(2.6,	18.0)

1. Brake pipe
2. ABS hydraulic unit/control module assembly
3. Bracket
4. Connector

HYDRAULIC UNIT INSPECTION

Check hydraulic unit for fluid leakage.
If any, repair or replace.

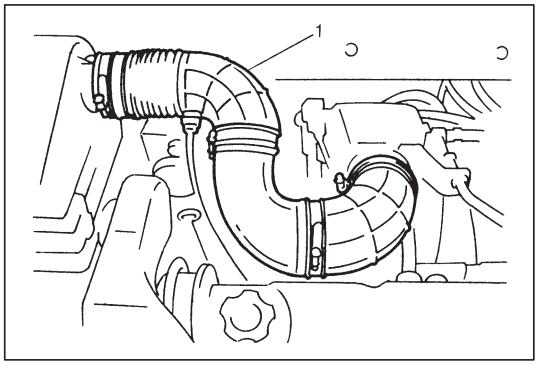

REMOVAL

1) Disconnect negative cable from battery.
2) For LH vehicle, remove air cleaner outlet pipe (1) referring to "Engine Mechanical" section.

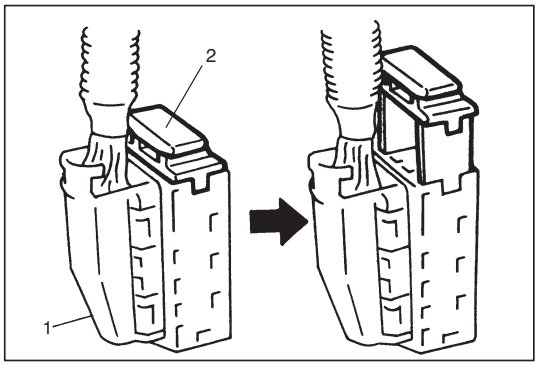

3) Disconnect ABS hydraulic unit/control module assembly connector (1) by pulling up lock (2).

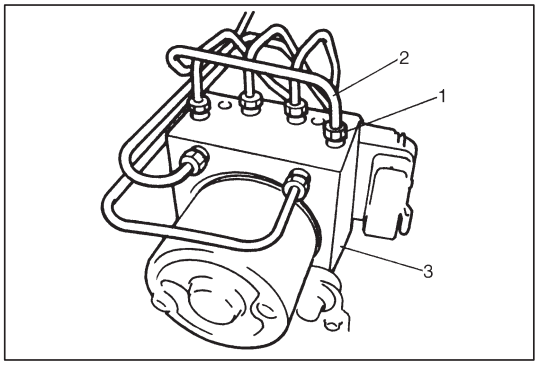

4) Using special tool, loosen flare nuts (1) and disconnect brake pipes (2) from ABS hydraulic unit/control module assembly (3).

Special Tool
09950-78220

NOTE:
Put bleeder plug cap onto pipe to prevent fluid from spilling.
Do not allow brake fluid to get on painted surfaces.

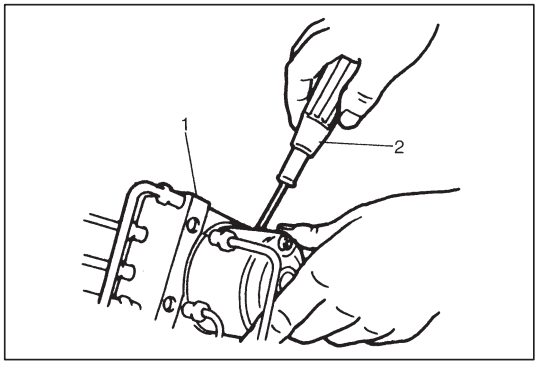

5) Remove two nuts and disconnect take out ABS hydraulic unit/control module assembly (1) from bracket using screwdriver (2).

CAUTION:
- **Do not give an impact to hydraulic unit.**
- **Use care not to allow dust to enter hydraulic unit.**
- **Do not place hydraulic unit on its side or upside down. Handling it in inappropriate way will affect its original performance.**

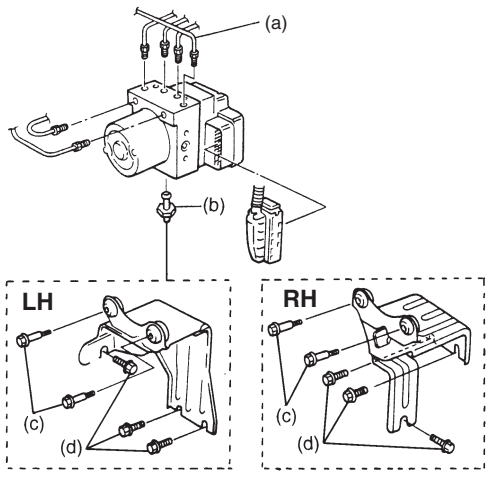

INSTALLATION

1) Install hydraulic unit by reversing removal procedure.

   Tightening Torque
   (a): 16 N·m (1.6 kg-m, 11.5 lb-ft)
   (b): 9 N·m (0.9 kg-m, 6.5 lb-ft)
   (c): 9 N·m (0.9 kg-m, 6.5 lb-ft)
   (d): 26 N·m (2.6 kg-m, 18.0 lb-ft)

2) Bleed air from brake system referring to “BRAKE” section.
3) Check each installed part for fluid leakage and perform “ABS Hydraulic Unit Operation Check” in this section.

   NOTE:
   For new ABS hydraulic unit/control module assembly, if “ABS Hydraulic Unit Operation Check” procedure has not been performed, “ABS” warning lamp may flash when ignition switch is turned ON position.

FRONT WHEEL SPEED SENSOR

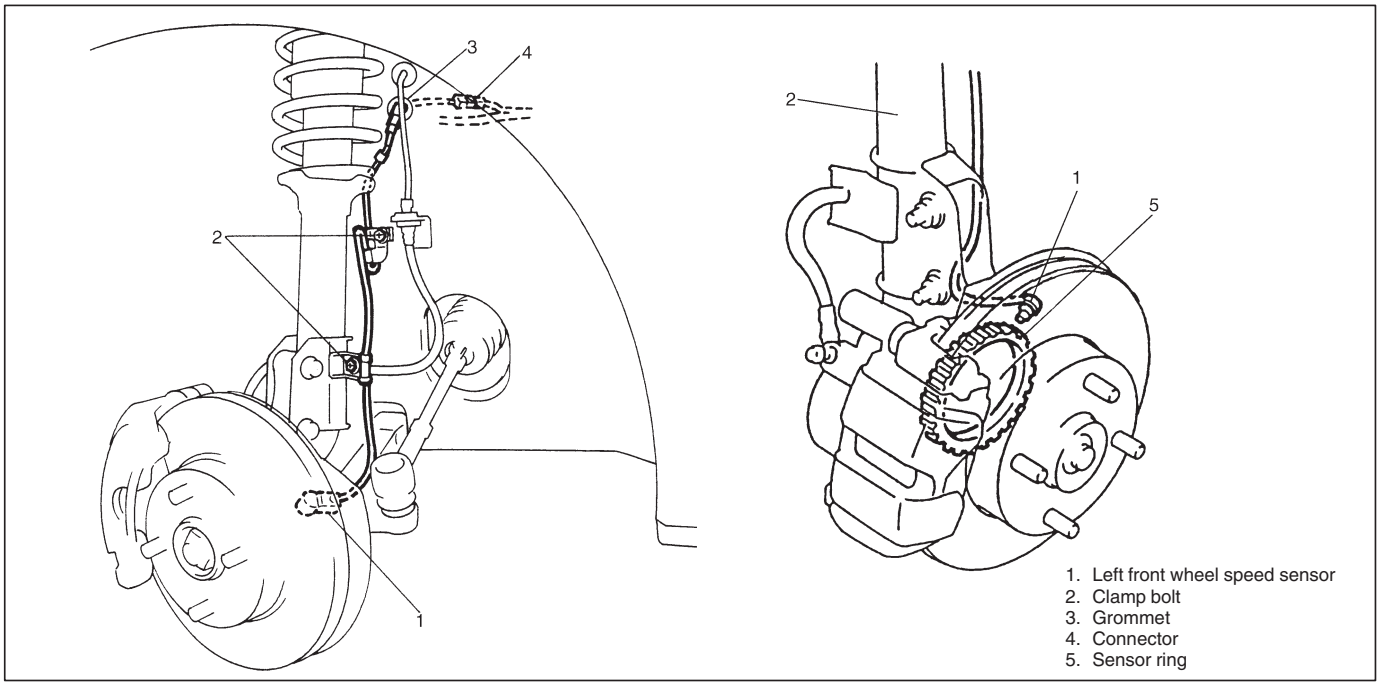

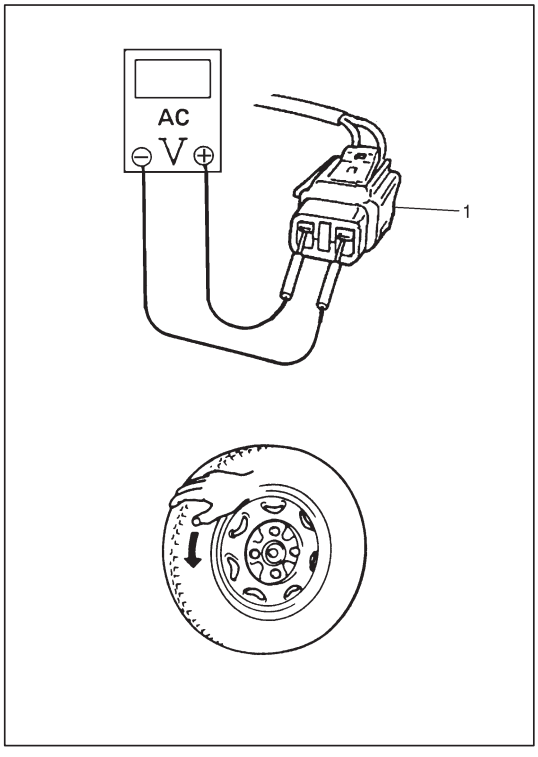

OUTPUT VOLTAGE INSPECTION

1) Turn ignition switch OFF.
2) Hoist vehicle a little.
3) Disconnect wheel speed sensor connector (1).
4) Disconnect wheel speed sensor grommet from vehicle body.
5) Connect voltmeter between connector (1) terminals.
6) While turning wheel by hand at a speed of approximately 1 full rotation to 1 1/3 rotation per second, check AC voltage of sensor.

   Output AC voltage at 1 to 1 1/3 rotation per second: 100 mV or more

   If measured voltage is not as specified, check sensor, rotor and their installation conditions.

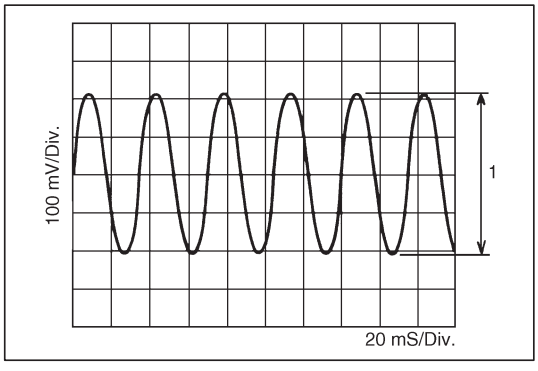

Reference

When using oscilloscope for this check, check if peak-to-peak voltage (1) meets specification and waveform is complete.

Peak-to-peak voltage at 1 to 1 1/3 rotation per second: 280 mV or more at 43 – 57 Hz

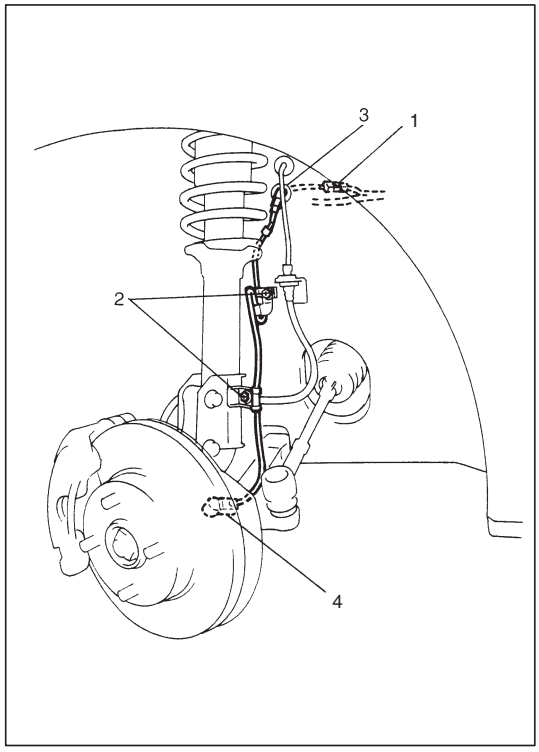

REMOVAL

1) Disconnect negative cable from battery.
2) Disconnect front wheel speed sensor coupler (1).
3) Hoist vehicle and remove wheel.
4) Remove harness clamp bolts (2) and grommet (3).
5) Remove front wheel speed sensor (4) from knuckle.

> **CAUTION:**
> - **Do not pull wire harness when removing front wheel speed sensor.**
> - **Do not cause damage to surface of front wheel speed sensor and do not allow dust, etc. to enter its installation hole.**

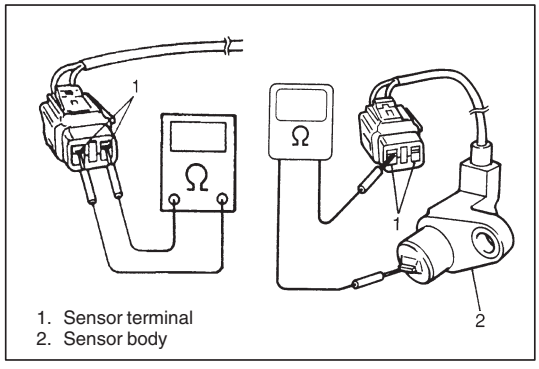

SENSOR INSPECTION

- Check sensor for damage.
- Check sensor for resistance and continuity.

Between both terminals (1) sensor: 1.2 – 1.6 kΩ at 20°C (68°F)
Between sensor terminal and sensor body (2): No continuity

If the check result is not as specified and any malcondition is found, replace.

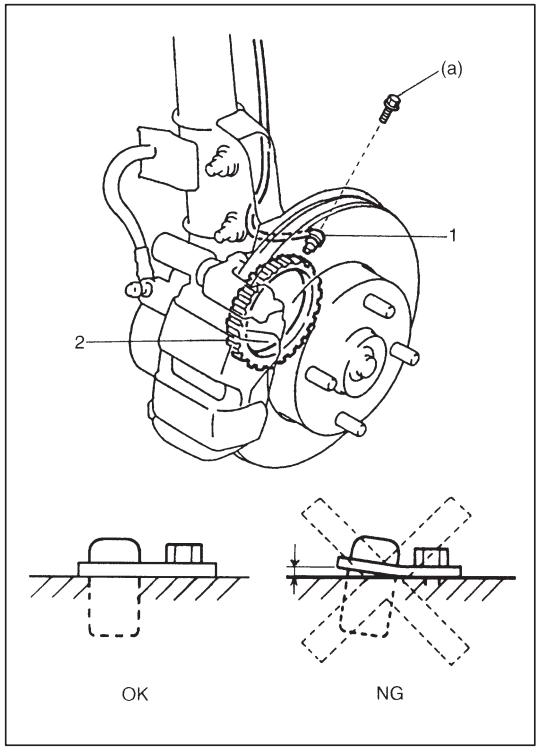

INSTALLATION

1) Check that no foreign material is attached to sensor (1) and sensor ring (2).
2) Install it by reversing removal procedure.

Tightening Torque
(a): 10 N·m (1.0 kg-m, 7.5 lb-ft)

> **CAUTION:**
> **Do not pull or twist wire harness more than necessary when installing front wheel speed sensor.**

3) Check that there is no clearance between sensor and knuckle.

FRONT WHEEL SPEED SENSOR RING

NOTE:
The front wheel sensor ring can not be removed or replaced alone. If front wheel sensor ring needs to be replaced, replace it as a wheel side joint assembly of drive shaft.

For removal and installation of wheel side joint assembly of drive shaft, refer to “FRONT DRIVE SHAFTS” section in this manual.

REAR WHEEL SPEED SENSOR

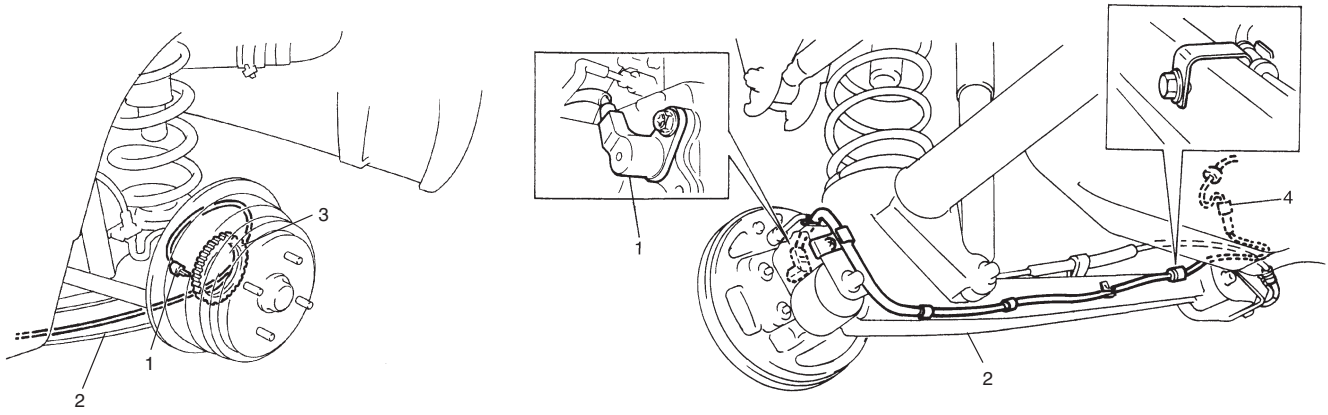

1. Left rear wheel sensor
2. Trailing arm
3. Sensor ring
4. Sensor coupler

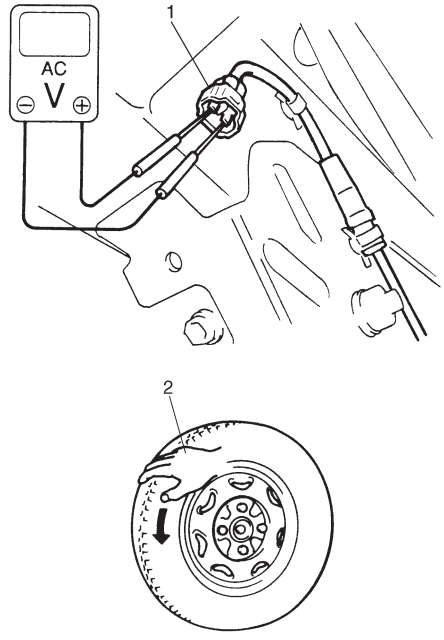

1. Wheel speed sensor connector
2. Rotate by hand

OUTPUT VOLTAGE INSPECTION

1) Turn ignition switch “OFF”.
2) Hoist vehicle.
3) Disconnect connector of wheel speed sensor.
4) Connect voltmeter between connector terminals.
5) While turning wheel at a speed of approximately 1 full rotation to 1 1/3 rotation per second, check AC voltage of sensor.

Output AC voltage at 1 to 1 1/3 rotation per second: 100 mV or more

If measured voltage is not as specified, check sensor, rotor and their installation conditions.

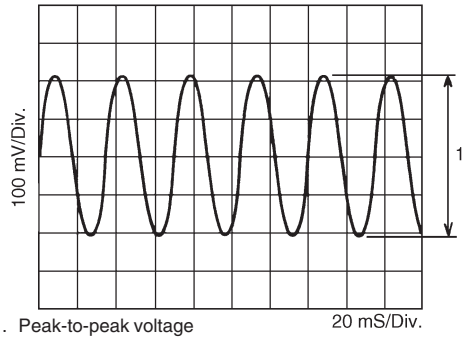

1. Peak-to-peak voltage

Reference

When using oscilloscope for this check, check if peak-to-peak voltage meets specification and waveform is complete.

Peak-to-peak voltage at 1 to 1 1/3 rotation per second: 280 mV or more at 43 – 57 Hz

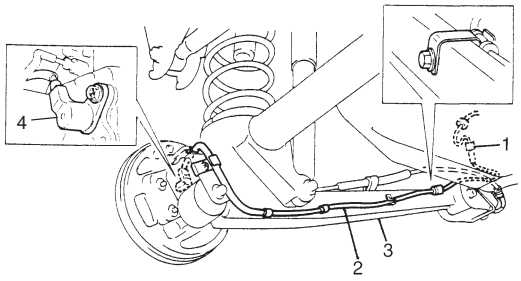

REMOVAL

1) Disconnect negative cable from battery.
2) Hoist vehicle.
3) Disconnect rear wheel speed sensor coupler (1).
4) Detach ABS wheel sensor wire harness (2) from suspension frame (3).
   Do not detach crip of rear wheel speed sensor connector from vehicle body unless replacement is necessary.
5) Remove rear wheel speed sensor (4) from rear axle housing.

> **CAUTION:**
> - **Do not pull wire harness when removing rear wheel speed sensor.**
> - **Do not cause damage to surface of rear wheel speed sensor and do not allow dust, etc. to enter its installation hole.**

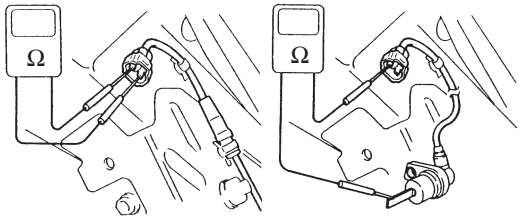

SENSOR INSPECTION

- Check sensor for damage.
- Check sensor for resistance and continuity.

Between both terminals of sensor: 0.9 –1.3 kΩ at 20°C (68°F)

Between sensor terminal and sensor body: No continuity

If the check result is not as specified and any malcondition is found, replace.

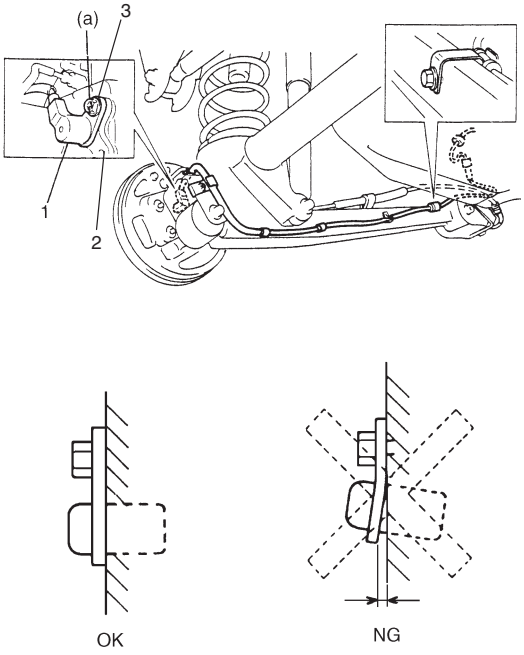

INSTALLATION

1) Check that no foreign material is attached to sensor (1) and ring.
2) Reverse removal procedure for installation noting the following.
   - There is another bolt hole (2) that is fit for wheel speed sensor bolt by proper bolt hole (3).
     Be sure to install wheel speed sensor and its bolt at the correct (upper) position as shown in figure.

     Tightening Torque
     (a): 10 N·m (1.0 kg-m, 7.2 lb-ft)

> **CAUTION:**
> **Do not pull or twist wire harness more than necessary when installing rear wheel speed sensor.**

3) Check that there is no clearance between sensor and rear axle shaft.

REAR WHEEL SPEED SENSOR RING

For removal, inspection and installation of rear wheel sensor ring, refer to “BRAKES” section in this manual.

SPECIAL TOOLS

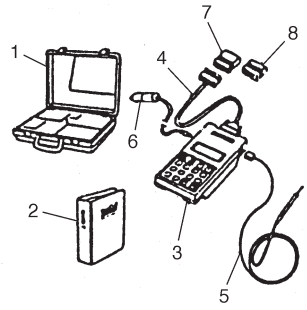

1. Storage case
2. Operator’s manual
3. Tech 1A
4. DLC cable
5. Test lead/probe
6. Power source cable
7. DLC cable adapter
8. Self-test adapter

09931-76011
SUZUKI scan tool (Tech 1A) kit

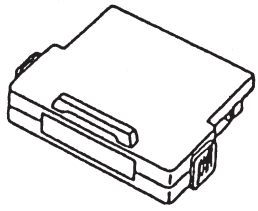

Mass storage cartridge

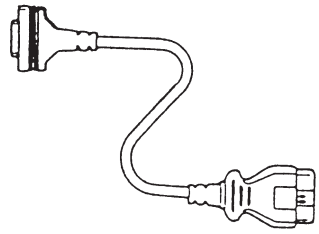

09931-76030
16/14 pin DLC cable

09950-78220
Flare nut wrench (10 mm)

SECTION 6

ENGINE

WARNING:
For vehicles equipped with Supplemental Restraint (Air Bag) System:

- **Service on and around the air bag system components or wiring must be performed only by an authorized SUZUKI dealer. Refer to "Air Bag System Components and Wiring Location View" under "General Description" in air bag system section in order to confirm whether you are performing service on or near the air bag system components or wiring. Please observe all WARNINGS and "Service Precautions" under "On-Vehicle Service" in air bag system section before performing service on or around the air bag system components or wiring. Failure to follow WARNINGS could result in unintentional activation of the system or could render the system inoperative. Either of these two conditions may result in severe injury.**
- **Technical service work must be started at least 90 seconds after the ignition switch is turned to the "LOCK" position and the negative cable is disconnected from the battery. Otherwise, the system may be activated by reserve energy in the Sensing and Diagnostic Module (SDM).**

CONTENTS

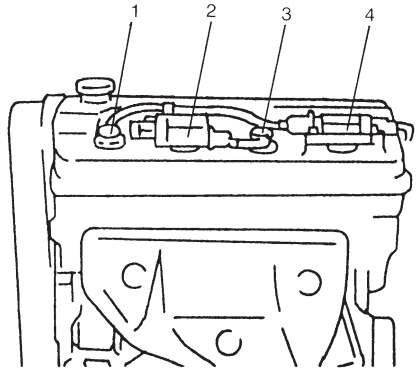

GENERAL INFORMATION

STATEMENT ON CLEANLINESS AND CARE

An automobile engine is a combination of many machined, honed, polished and lapped surfaces with tolerances that are measured in the thousands of an millimeter (ten thousands of an inch).
Accordingly, when any internal engine parts are serviced, care and cleanliness are important.
Throughout this section, it should be understood that proper cleaning and protection of machined surfaces and friction areas is part of the repair procedure. This is considered standard shop practice even if not specifically stated.

- A liberal coating of engine oil should be applied to friction areas during assembly to protect and lubricate the surfaces on initial operation.
- Whenever valve train components, pistons, piston rings, connecting rods, rod bearings, and crankshaft journal bearings are removed for service, they should be retained in order.
  At the time of installation, they should be installed in the same locations and with the same mating surfaces as when removed.
- Battery cables should be disconnected before any major work is performed on the engine.
  Failure to disconnect cables may result in damage to wire harness or other electrical parts.
- Throughout this manual, the four cylinders of the engine are identified by numbers; No.1 (1), No.2 (2), No.3 (3) and No.4 (4) counted from crankshaft pulley side to flywheel side.

GENERAL INFORMATION ON ENGINE SERVICE

THE FOLLOWING INFORMATION ON ENGINE SERVICE SHOULD BE NOTED CAREFULLY, AS IT IS IMPORTANT IN PREVENTING DAMAGE, AND IN CONTRIBUTING TO RELIABLE ENGINE PERFORMANCE.

- When raising or supporting engine for any reason, do not use a jack under oil pan. Due to small clearance between oil pan and oil pump strainer, jacking against oil pan may cause it to be bent against strainer resulting in damaged oil pick-up unit.
- It should be kept in mind, while working on engine, that 12-volt electrical system is capable of violent and damaging short circuits.
  When performing any work where electrical terminals can be grounded, ground cable of the battery should be disconnected at battery.
- Any time the air cleaner, throttle body or intake manifold is removed, the intake opening should be covered. This will protect against accidental entrance of foreign material which could follow intake passage into cylinder and cause extensive damage when engine is started.

HOSE CONNECTION

With short pipe, fit hose as far as it reaches pipe joint as shown.

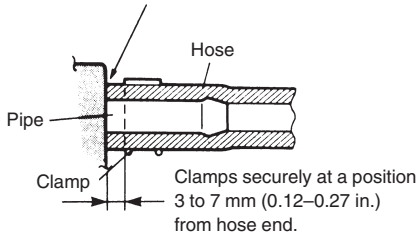

With following type pipe, fit hose as far as its peripheral projection as shown.

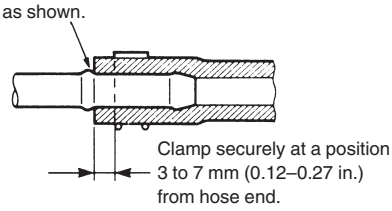

With bent pipe, fit hose as its bent part as shown or till pipe is about 20 to 30 mm (0.79–1.18 in.) into the hose.

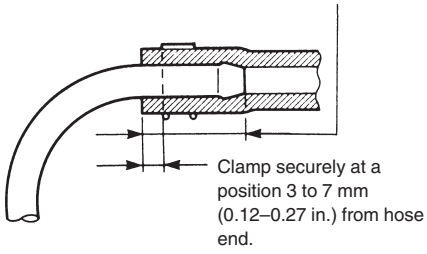

With straight pipe, fit hose till pipe is, about 20 to 30 mm (0.79–1.18 in.) into the hose.

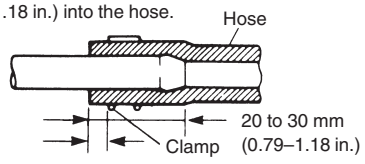

Clamp securely at a position 3 to 7mm (0.12–0.27 in.) from hose end.

PRECAUTION ON FUEL SYSTEM SERVICE

- Work must be done with no smoking, in a well-ventilated area and away from any open flames.
- As fuel feed line (between fuel pump and fuel delivery pipe) is still under high fuel pressure even after engine was stopped, loosening or disconnecting fuel feed line directly may cause dangerous spout of fuel to occur where loosened or disconnected.
  Before loosening or disconnecting fuel feed line, make sure to release fuel pressure according to “FUEL PRESSURE RELIEF PROCEDURE”. A small amount of fuel may be released after the fuel line is disconnected. In order to reduce the chance of personal injury, cover the fitting to be disconnected with a shop cloth. Put that cloth in an approved container when disconnection is completed.
- Never run engine with fuel pump relay disconnected when engine and exhaust system are hot.
- Fuel or fuel vapor hose connection varies with each type of pipe. When reconnecting fuel or fuel vapor hose, be sure to connect and clamp each hose correctly referring to left figure Hose Connection.
  After connecting, make sure that it has no twist or kink.
- When installing injector or fuel delivery pipe, lubricate its O-ring with spindle oil or gasoline.
- When connecting fuel pipe flare nut, first tighten flare nut by hand and then tighten it to specified torque.

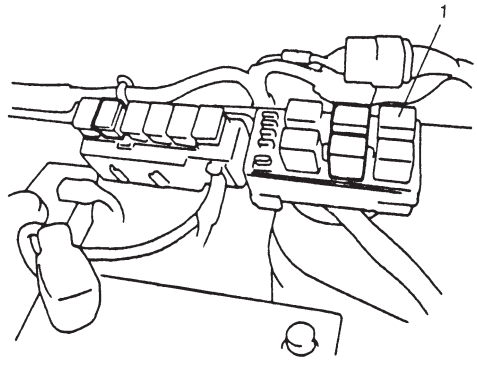

FUEL PRESSURE RELIEF PROCEDURE

CAUTION:
This work must not be done when engine is hot. If done so, it may cause adverse effect to catalyst.

After making sure that engine is cold, release fuel pressure as follows.

1) Place transmission gear shift lever in “Neutral” (Shift selector lever to “P” range for A/T model), set parking brake, and block drive wheels.
2) Remove relay box cover.
3) Disconnect fuel pump relay (1) from relay box.
4) Remove fuel filler cap to release fuel vapor pressure in fuel tank and then reinstall it.
5) Start engine and run it till it stops for lack of fuel. Repeat cranking engine 2-3 times for about 3 seconds each time to dissipate fuel pressure in lines. Fuel connections are now safe for servicing.
6) Upon completion of servicing, connect fuel pump relay (1) to relay box and install relay box cover.

FUEL LEAKAGE CHECK PROCEDURE

After performing any service on fuel system, check to make sure that there are no fuel leakages as follows.

1) Turn ON ignition switch for 3 seconds (to operate fuel pump) and then turn it OFF.
   Repeat this (ON and OFF) 3 or 4 times and apply fuel pressure to fuel line. (till fuel pressure is felt by hand placed on fuel feed hose.)
2) In this state, check to see that there are no fuel leakages from any part of fuel system.

ENGINE DIAGNOSIS

GENERAL DESCRIPTION

This vehicle is equipped with an engine and emission control system which are under control of ECM.
The engine and emission control system in this vehicle are controlled by ECM. ECM has an On-Board Diagnostic system which detects a malfunction in this system and abnormality of those parts that influence the engine exhaust emission. When diagnosing engine troubles, be sure to have full understanding of the outline of “On-Board Diagnostic System” and each item in “Precaution in Diagnosing Trouble” and execute diagnosis according to “ENGINE DIAGNOSTIC FLOW TABLE”.
There is a close relationship between the engine mechanical, engine cooling system, ignition system, exhaust system, etc. and the engine and emission control system in their structure and operation. In case of an engine trouble, even when the malfunction indicator lamp (MIL) doesn’t turn ON, it should be diagnosed according to this flow table.

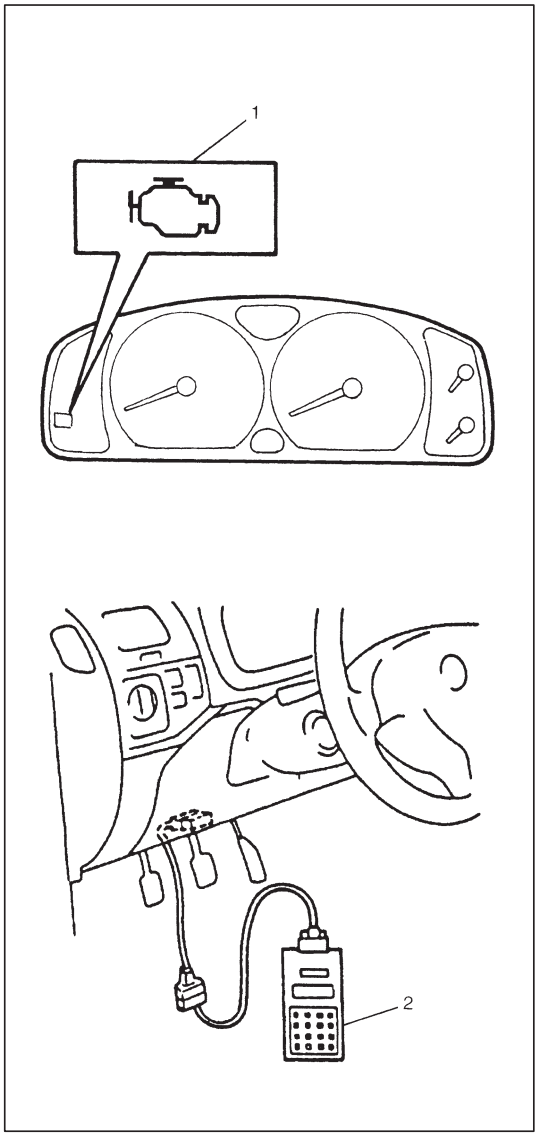

ON-BOARD DIAGNOSTIC SYSTEM (VEHICLE WITH EGR VALVE)

ECM in this vehicle has following functions.

- When the ignition switch is turned ON with the engine at a stop, malfunction indicator lamp (MIL) (1) turns ON to check the bulb of the malfunction indicator lamp (1).
- When ECM detects a malfunction which gives an adverse effect to vehicle emission while the engine is running, it makes the malfunction indicator lamp (1) in the meter cluster of the instrument panel turn ON or flash (flashing only when detecting a misfire which can cause damage to the catalyst) and stores the malfunction area in its memory.
  (If it detects that continuously 3 driving cycles are normal after detecting a malfunction, however, it makes MIL (1) turn OFF although DTC stored in its memory will remain.)
- As a condition for detecting a malfunction in some areas in the system being monitored by ECM and turning ON the malfunction indicator lamp (1) due to that malfunction, 2 driving cycle detection logic is adopted to prevent erroneous detection.
- When a malfunction is detected, engine and driving conditions then are stored in ECM memory as freeze frame data. (For the details, refer to description on Freeze frame data.)
- It is possible to communicate by using not only SUZUKI scan tool (Tech-1) (2) but also generic scan tool. (Diagnostic information can be accessed by using a scan tool.)

Warm-up Cycle

A warm-up cycle means sufficient vehicle operation such that the coolant temperature has risen by at least 22°C (40°F) from engine starting and reaches a minimum temperature of 70°C (160°F).

Driving Cycle

A “Driving Cycle” consists of engine startup and engine shutoff.

2 Driving Cycle Detection Logic

The malfunction detected in the first driving cycle is stored in ECM memory (in the form of pending DTC and freeze frame data) but the malfunction indicator lamp does not light at this time. It lights up at the second detection of same malfunction also in the next driving cycle.

Pending DTC

Pending DTC means a DTC detected and stored temporarily at 1 driving cycle of the DTC which is detected in the 2 driving cycle detection logic.

An Example of Freeze Frame Data

1.	Trouble Code	P0102 (1st)
2.	Engine Speed	782 RPM
3.	Eng Cool Tmp.	80°C
4.	Vehicle Spd.	0 km/h
5.	MAP Sensor	39 kPa
6.	St. Term FT1	– 0.8% Lean
7.	Lg. Term FT1	– 1.6% Lean
8.	Fuel 1 Stat.	Closed Loop
9.	Fuel 2 Stat.	Not used
10.	Load value	25.5%

1st, 2nd or 3rd in parentheses here represents which position in the order the malfunction is detected.

Freeze Frame Data

ECM stores the engine and driving conditions (in the form of data as shown at the left) at the moment of the detection of a malfunction in its memory. This data is called “Freeze frame data”.
Therefore, it is possible to know engine and driving conditions (e.g., whether the engine was warm or not, where the vehicle was running or stopped, where air/fuel mixture was lean or rich) when a malfunction was detected by checking the freeze frame data. Also, ECM has a function to store each freeze frame data for three different malfunctions in the order as the malfunction is detected. Utilizing this function, it is possible to know the order of malfunctions that have been detected. Its use is helpful when rechecking or diagnosing a trouble.

Priority of freeze frame data:

ECM has 4 frames where the freeze frame data can be stored. The first frame stores the freeze frame data of the malfunction which was detected first. However, the freeze frame data stored in this frame is updated according to the priority described below. (If malfunction as described in the upper square “1” below is detected while the freeze frame data in the lower square “2” has been stored, the freeze frame data “2” will be updated by the freeze frame data “1”.)

PRIORITY	FREEZE FRAME DATA IN FRAME 1
1	Freeze frame data at initial detection of malfunction among misfire detected (P0300-P0304), fuel system too lean (P0171) and fuel system too rich (P0172)
2	Freeze frame data when a malfunction other than those in “1” above is detected

In the 2nd through the 4th frames, the freeze frame data of each malfunction is stored in the order as the malfunction is detected. These data are not updated.
Shown in the table below are examples of how freeze frame data are stored when two or more malfunctions are detected.

FRAME / MALFUNCTION DETECTED ORDER		FRAME 1	FRAME 2	FRAME 3	FRAME 4
		FREEZE FRAME DATA to be updated	1st FREEZE FRAME DATA	2nd FREEZE FRAME DATA	3rd FREEZE FRAME DATA
	No malfunction	No freeze frame data			
1	P0400 (EGR) detected	Data at P0400 detection	Data at P0400 detection	–	–
2	P0171 (Fuel system) detected	Data at P0171 detection	Data at P0400 detection	Data at P0171 detection	–
3	P0300 (Misfire) detected	Data at P0171 detection	Data at P0400 detection	Data at P0171 detection	Data at P0300 detection
4	P0301 (Misfire) detected	Data at P0171 detection	Data at P0400 detection	Data at P0171 detection	Data at P0300 detection

Freeze frame data clearance:
The freeze frame data is cleared at the same time as clearance of diagnostic trouble code (DTC).

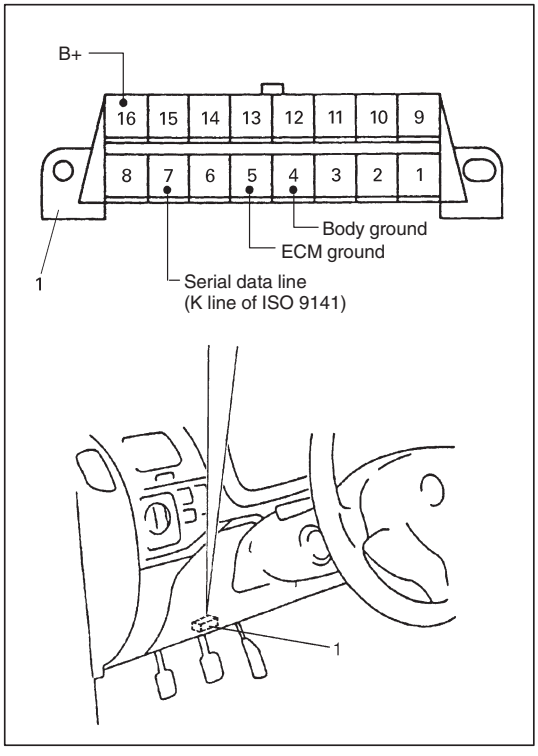

Data Link Connector (DLC)
DLC (1) is in compliance with SAEJ1962 in its installation position, the shape of connector and pin assignment.

Serial data line (K line of ISO 9141) is used for SUZUKI scan tool (Tech-1) to communicate with ECM.

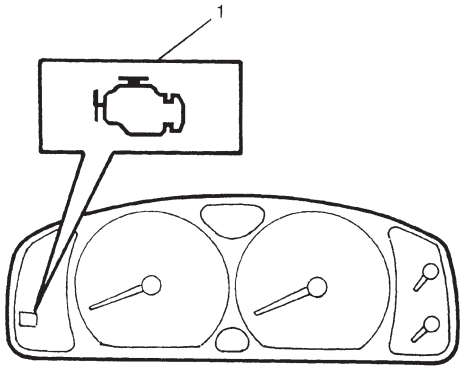

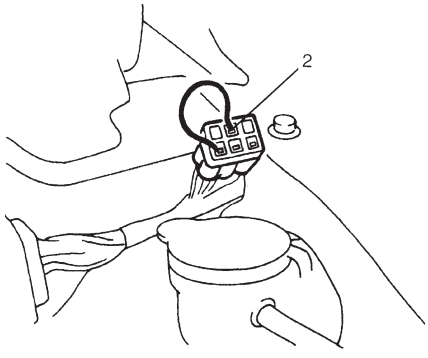

ON-BOARD DIAGNOSTIC SYSTEM (VEHICLE WITHOUT EGR VALVE)

ECM diagnosis troubles which may occur in the area including the following parts when the ignition switch is ON and the engine is running, and indicates the result by turning on or flashing malfunction indicator lamp (1).

- Heated oxygen sensor
- ECT sensor
- TP sensor
- IAT sensor
- MAP sensor
- CMP sensor
- CKP sensor
- VSS
- CPU (Central Processing Unit) of ECM

ECM and malfunction indicator lamp (1) operate as follows.

- Malfunction indicator lamp (1) lights when the ignition switch is turned ON (but the engine at stop) with the diagnosis switch terminal ungrounded regardless of the condition of Electronic Fuel Injection system. This is only to check the malfunction indicator lamp (1) bulb and its circuit.
- If the above areas of Electronic Fuel Injection system is free from any trouble after the engine start (while engine is running), malfunction indicator lamp (1) turns OFF.
- When ECM detects a trouble which has occurred in the above areas, it makes malfunction indicator lamp (1) turn ON while the engine is running to warn the driver of such occurrence of trouble and at the same time it stores the trouble area in ECM back-up memory. (The memory is kept as it is even if the trouble was only temporary and disappeared immediately. And it is not erased unless the power to ECM is shut off for specified time below.)
  ECM also indicates trouble area in memory by means of flashing of malfunction indicator lamp (1) at the time of inspection. (i.e. when diagnosis switch terminal (2) is grounded and ignition switch is turned ON.)

NOTE:

- **When a trouble occurs in the above areas and disappears soon while the diagnosis switch terminal is ungrounded and the engine is running, malfunction indicator lamp (1) lights and remains ON as long as the trouble exists but it turns OFF when the normal condition is restored.**
- **Time required to erase diagnostic trouble code memory thoroughly varies depending on ambient temperature as follows.**

AMBIENT TEMPERATURE	TIME TO CUT POWER TO ECM
Over 0°C (32°F)	60 sec. or longer
Under 0°C (32°F)	Not specifiable. Select a place with higher than 0°C (32°F) temperature.

PRECAUTION IN DIAGNOSING TROUBLE

- Don't disconnect couplers from ECM, battery cable from battery, ECM ground wire harness from engine or main fuse before confirming diagnostic information (DTC, freeze frame data, etc.) stored in ECM memory. Such disconnection will erase memorized information in ECM memory.
- Diagnostic information stored in ECM memory can be cleared as well as checked by using SUZUKI scan tool (Tech-1) or generic scan tool. Before using scan tool, read its Operator's (Instruction) Manual carefully to have good understanding as to what functions are available and how to use it.
- Priorities for diagnosing troubles (Vehicle with EGR valve).
  If troubleshooting priorities for multiple diagnostic codes are given in the applicable DTC flow chart, these should be followed.
  If no instructions are given, troubleshoot diagnostic trouble codes according to the following priorities.
  1. Diagnostic trouble codes (DTCs) other than DTC P0171/P0172 (Fuel system too lean/too rich), DTC P0300/P0301/P0302/P0303/P0304 (Misfire detected) and DTC P0400 (EGR flow malfunction)
  2. DTC P0171/P0172 (Fuel system too lean/too rich) and DTC P0400 (EGR flow malfunction)
  3. DTC P0300/P0301/P0302/P0303/P0304 (Misfire detected)
- Be sure to read "Precautions for Electrical Circuit Service" in Section 0A before inspection and observe what is written there.
- ECM Replacement
  When substituting a known-good ECM, check for following conditions. Neglecting this check may cause damage to a known-good ECM.
  – Resistance value of all relays, actuators is as specified respectively.
  – MAP sensor and TP sensor are in good condition and none of power circuits of these sensors is shorted to ground.

ENGINE DIAGNOSTIC FLOW TABLE

Refer to the following pages for the details of each step.

STEP	ACTION	YES	NO
1	Customer Complaint Analysis 1) Perform customer complaint analysis referring to the next page. Was customer complaint analysis performed?	Go to Step 2.	Perform customer complaint analysis.
2	Diagnostic Trouble Code (DTC) and Freeze Frame Data Check, Record and Clearance 1) Check for DTC (including pending DTC) referring to the next page. Is there any DTC(s)?	1) Print DTC and freeze frame data or write them down and clear them by referring to "DTC Clearance" section. 2) Go to Step 3.	Go to Step 4.
3	Visual Inspection 1) Perform visual inspection referring to the next page. Is there any faulty condition?	1) Repair or replace malfunction part. 2) Go to Step 11.	Go to Step 5.
4	Visual Inspection 1) Perform visual inspection referring to the next page. Is there any faulty condition?		Go to Step 8.
5	Trouble Symptom Confirmation 1) Confirm trouble symptom referring to the next page. Is trouble symptom identified?	Go to Step 6.	Go to Step 7.
6	Rechecking and Record of DTC/Freeze Frame Data 1) Recheck for DTC and freeze frame data referring to "DTC Check" section. Is there any DTC(s)?	Go to Step 9.	Go to Step 8.
7	Rechecking and Record of DTC/Freeze Frame Data 1) Recheck for DTC and freeze frame data referring to "DTC Check" section. Is there any DTC(s)?		Go to Step 10.
8	Engine Basic Inspection and Symptoms-To-Diagnosis Matrix Table 1) Check and repair according to "Engine Basic Check" and "Symptom-To-Diagnosis Matrix Table" section. Are check and repair complete?	Go to Step 11.	1) Check and repair malfunction part(s). 2) Go to Step 11.
9	Trouble shooting for DTC 1) Check and repair according to applicable DTC diag. flow table. Are check and repair complete?		
10	Check for Intermittent Problems 1) Check for intermittent problems referring to the next page. Is there any faulty condition?	1) Repair or replace malfunction part(s). 2) Go to Step 11.	Go to Step 11.
11	Final Confirmation Test 1) Clear DTC if any. 2) Perform final confirmation test referring to the next page. Is there any problem symptom, DTC or abnormal condition?	Go to Step 6.	End.

1. CUSTOMER COMPLAINT ANALYSIS

Record details of the problem (failure, complaint) and how it occurred as described by the customer. For this purpose, use of such an inspection form will facilitate collecting information to the point required for proper analysis and diagnosis.

2. DIAGNOSTIC TROUBLE CODE (DTC)/FREEZE FRAME DATA CHECK, RECORD AND CLEARANCE

First, check DTC (including pending DTC), referring to "DTC check" section. If DTC is indicated, print it and freeze frame data or write them down and then clear them by referring to "DTC clearance" section. DTC indicates malfunction that occurred in the system but does not indicate whether it exists now or it occurred in the past and the normal condition has been restored now. To check which case applies, check the symptom in question according to Step 4 and recheck DTC according to Step 5.

Attempt to diagnose a trouble based on DTC in this step only or failure to clear the DTC in this step will lead to incorrect diagnosis, trouble diagnosis of a normal circuit or difficulty in troubleshooting.

NOTE:

- **If only Automatic transmission DTCs (P0702-P1717) or Immobilizer DTCs (P1610-P1614) are indicated in this step, perform trouble diagnosis according to "Diagnosis" in Section 7B or Section 8G.**

3. and 4. VISUAL INSPECTION

As a preliminary step, be sure to perform visual check of the items that support proper function of the engine referring to "Visual Inspection" section.

5. TROUBLE SYMPTOM CONFIRMATION

Based on information obtained in Step 1 Customer complaint analysis and Step 2 DTC/freeze frame data check, confirm trouble symptoms. Also, reconfirm DTC according to "DTC Confirmation Procedure" described in each DTC Diagnosis section.

6. and 7. RECHECKING AND RECORD OF DTC/FREEZE FRAME DATA

Refer to "DTC check" section for checking procedure.

8. ENGINE BASIC INSPECTION AND ENGINE DIAGNOSIS TABLE

Perform basic engine check according to the "Engine Basic Inspection Flow Table" first. When the end of the flow table has been reached, check the parts of the system suspected as a possible cause referring to SYMPTOMS-TO-DIAGNOSIS MATRIX TABLE and based on symptoms appearing on the vehicle (symptoms obtained through steps of customer complaint analysis, trouble symptom confirmation and/or basic engine check) and repair or replace faulty parts, if any.

9. TROUBLESHOOTING FOR DTC (See each DTC Diag. Flow Table)

Based on the DTC indicated in Step 5 and referring to the applicable DTC diag. flow table in this section, locate the cause of the trouble, namely in a sensor, switch, wire harness, connector, actuator, ECM or other part and repair or replace faulty parts.

10. CHECK FOR INTERMITTENT PROBLEM

Check parts where an intermittent trouble is easy to occur (e.g., wire harness, connector, etc.), referring to "INTERMITTENT AND POOR CONNECTION" in Section 0A and related circuit of DTC recorded in Step 2.

11. FINAL CONFIRMATION TEST

Confirm that the problem symptom has gone and the engine is free from any abnormal conditions. If what has been repaired is related to the DTC, clear the DTC once, perform DTC confirmation procedure and confirm that no DTC is indicated.

CUSTOMER PROBLEM INSPECTION FORM (EXAMPLE)

User name:	Model:	VIN:	
Date of issue:	Date Reg.	Date of problem:	Mileage:

PROBLEM SYMPTOMS	
☐ **Difficult Starting** ☐ No cranking ☐ No initial combustion ☐ No combustion ☐ Poor starting at (☐cold ☐warm ☐always) ☐ Other_____	☐ **Poor Driveability** ☐ Hesitation on acceleration ☐ Back fire/☐After fire ☐ Lack of power ☐ Surging ☐ abnormal knocking ☐ Other_____
☐ **Poor Idling** ☐ Poor fast idle ☐ Abnormal idling speed (☐High ☐Low) (r/min.) ☐ Unstable ☐ Hunting (r/min. to r/min.) ☐ Other_____	☐ **Engine Stall when** ☐ Immediately after start ☐ Accel. pedal is depressed ☐ Accel. pedal is released ☐ Load is applied ☐ A/C ☐Electric load ☐P/S ☐ Other_____ ☐ Other_____
☐ OTHERS:	

VEHICLE/ENVIRONMENTAL CONDITION WHEN PROBLEM OCCURS	
Environmental Condition	
Weather Temperature Frequency Road	☐Fair ☐Cloudy ☐Rain ☐Snow ☐Not related ☐Other_____ ☐Hot ☐Warm ☐Cool ☐Cold (°F/ °C) ☐Not related ☐Always ☐Sometimes (times/ day, month) ☐Only once ☐Under certain condition ☐Urban ☐Suburb ☐Highway ☐Mountainous (☐Uphill ☐Downhill) ☐Tarmacadam ☐Gravel ☐Other_____
Vehicle Condition	
Engine condition	☐Cold ☐Warming up phase ☐Warmed up ☐Not related ☐Other at starting ☐Immediately after start ☐Racing without load ☐Engine speed (r/min)
Vehicle condition	During driving: ☐Constant speed ☐Accelerating ☐Decelerating ☐Right hand corner ☐Left hand corner ☐When shifting (Lever position) ☐At stop ☐Vehicle speed when problem occurs (km/h, Mile/h) ☐Other_____

Malfunction indicator lamp condition	☐Always ON ☐Sometimes ON ☐Always OFF ☐Good condition
Diagnostic trouble code	First check: ☐No code ☐Malfunction code ( )
	Second check: ☐No code ☐Malfunction code ( )

NOTE:
The above form is a standard sample. It should be modified according to conditions characteristic of each market.

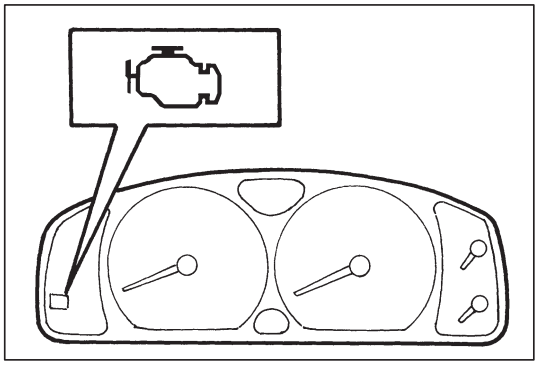

MALFUNCTION INDICATOR LAMP (MIL) CHECK

1) Turn ON ignition switch (but the engine at stop) and check that MIL lights.
   If MIL does not light up (or MIL dims), go to “Diagnostic Flow Table A-1” for troubleshooting.
2) Start engine and check that MIL turns OFF.
   If MIL remains ON and no DTC is stored in ECM, go to “Diagnostic Flow Table A-2” for troubleshooting.

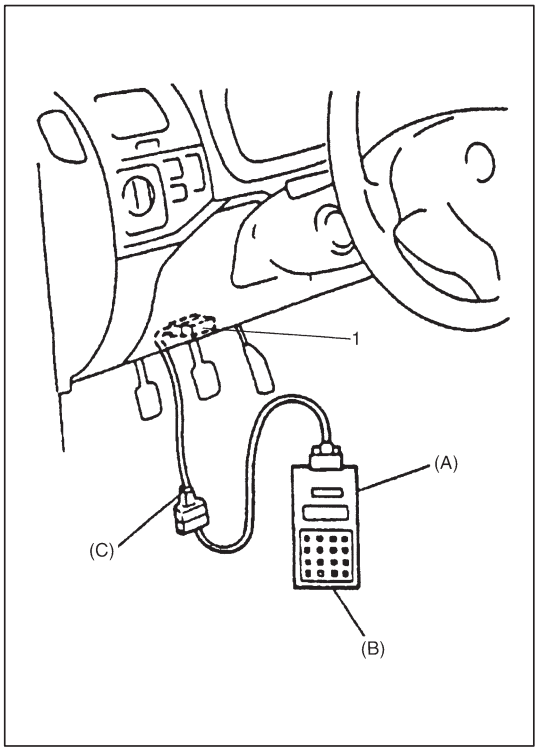

DIAGNOSTIC TROUBLE CODE (DTC) CHECK

[Using SUZUKI scan tool]

1) Prepare SUZUKI scan tool (Tech-1).
2) With ignition switch OFF, connect it to data link connector (DLC) (1) located on underside of instrument panel at driver’s seat side.
   Special Tool:
   (A): SUZUKI scan tool
   (B): Mass storage cartridge
   (C): 16/14 pin DLC cable
3) Turn ignition switch ON and confirm that MIL lights.
4) Read DTC, pending DTC and freeze frame data according to instructions displayed on scan tool and print it or write it down. Refer to scan tool operator’s manual for further details.
   If communication between scan tool and ECM is not possible, check if scan tool is communicable by connecting it to ECM in another vehicle. If communication is possible in this case, scan tool is in good condition. Then check data link connector and serial data line (circuit) in the vehicle with which communication was not possible.
5) After completing the check, turn ignition switch off and disconnect scan tool from data link connector.

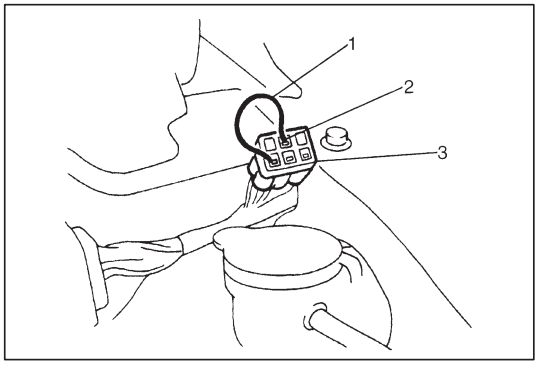

[Not using SUZUKI scan tool] (Vehicle without EGR valve)

1) Check malfunction indicator lamp referring to “Malfunction Indicator Lamp Check” in this section.
2) With the ignition switch OFF position, disconnect SUZUKI scan tool if connected and using service wire (1), ground diagnosis switch terminal (2) in monitor coupler (3).
3) With the ignition switch ON position and leaving engine OFF, read DTC from flashing pattern of malfunction indicator lamp. Refer to “Diagnostic Trouble Code Table”.
   If lamp remains ON, go to “Diagnostic Flow Table A-1”.

   NOTE:
   - **If abnormality or malfunction lies in two or more areas, malfunction indicator lamp indicates applicable codes three times each.**
     And flashing of these codes is repeated as long as diagnosis terminal is grounded and ignition switch is held at ON position.
   - **Take a note of diagnostic trouble code indicated first.**

4) After completing the check, turn the ignition switch OFF position and disconnect service wire from monitor coupler.

DIAGNOSTIC TROUBLE CODE (DTC) CLEARANCE

[Using SUZUKI scan tool]

1) Connect SUZUKI scan tool (Tech-1) to data link connector in the same manner as when making this connection for DTC check.
2) Turn ignition switch ON.
3) Erase DTC and pending DTC according to instructions displayed on scan tool. Refer to scan tool operator's manual for further details.
4) After completing the clearance, turn ignition switch off and disconnect scan tool from data link connector.

NOTE:
DTC and freeze frame data stored in ECM memory are also cleared in following cases. Be careful not to clear them before keeping their record.

- **When power to ECM is cut off (by disconnecting battery cable, removing fuse or disconnecting ECM connectors)**
- **When the same malfunction (DTC) is not detected again during 40 engine warm-up cycles.**

[Not using SUZUKI scan tool]

1) Turn the ignition switch OFF position.
2) Disconnect battery negative cable for specified time below to erase diagnostic trouble code stored in ECM memory and reconnect it.

Time required to erase DTC:

Ambient temperature	Time to cut power to ECM
Over 0°C (32°F)	30 sec. or longer
Under 0°C (32°F)	Not specifiable. Select a place with higher than 0°C (32°F) temperature.

DIAGNOSTIC TROUBLE CODE (DTC) TABLE

DTC NO.	DETECTING ITEM	DETECTING CONDITION (DTC will set when detecting:)	MIL (vehicle with EGR valve)	MIL (vehicle without EGR valve)
P0105 (No.11)	Manifold absolute pressure circuit malfunction	Low pressure-high vacuum-low voltage (or MAP sensor circuit shorted to ground) High pressure-low vacuum-high voltage (or MAP sensor circuit open)	1 driving cycle	1 driving cycle
P0110 (No.18)	Intake air temp. circuit malfunction	Intake air temp. circuit low input Intake air temp. circuit high input	1 driving cycle	1 driving cycle
P0115 (No.19)	Engine coolant temp. circuit malfunction	Engine coolant temp. circuit low input Engine coolant temp. circuit high input	1 driving cycle	1 driving cycle
P0120 (No.13)	Throttle position circuit malfunction	Throttle position circuit low input Throttle position circuit high input	1 driving cycle	1 driving cycle
P0121	Throttle position circuit performance problem	Poor performance of TP sensor	2 driving cycles	Not applicable
P0130 (No.14)	HO2S circuit malfunction (Sensor-1)	Min. output voltage of HO2S-higher than specification Max. output voltage of HO2S-lower than specification	2 driving cycles	1 driving cycle
P0133	HO2S circuit slow response (Sensor-1)	Response time of HO2S-1 output voltage between rich and lean is longer than specification.	2 driving cycles	Not applicable
P0135 (No.14)	HO2S heater circuit malfunction (Sensor-1)	Terminal voltage is lower than specification at heater OFF or it is higher at heater ON.	2 driving cycles	1 driving cycle
P0136	HO2S circuit malfunction (Sensor-2)	Max. voltage of HO2S-2 is lower than specification or its min. voltage is higher than specification	2 driving cycles	Not applicable
P0141	HO2S heater circuit malfunction (Sensor-2)	Terminal voltage is lower than specification at heater OFF or it is higher at heater ON. (or heater circuit or short)	2 driving cycles	Not applicable
P0171	Fuel system too lean	Short term fuel trim or total fuel trim (short and long terms added) is larger than specification for specified time or longer. (fuel trim toward rich side is large.)	2 driving cycles	Not applicable
P0172	Fuel system too rich	Short term fuel trim or total fuel trim (short and long term added) is smaller than specification for specified time or longer. (fuel trim toward lean side is large.)	2 driving cycles	Not applicable
P0300 P0301 P0302 P0303 P0304	Random misfire detected Cylinder 1 misfire detected Cylinder 2 misfire detected Cylinder 3 misfire detected Cylinder 4 misfire detected	Misfire of such level as to cause damage to three way catalyst	MIL flashing during misfire detection	Not applicable
		Misfire of such level as to deteriorate emission but not to cause damage to three way catalyst	2 driving cycles	Not applicable

DTC NO.	DETECTING ITEM	DETECTING CONDITION (DTC will set when detecting:)	MIL (vehicle with EGR valve)	MIL (vehicle without EGR valve)
P0325 (No.17)	Knock sensor circuit malfunction	Knock sensor circuit low input Knock sensor circuit high input	1 driving cycle	1 driving cycle
P0335 (No.23)	Crankshaft position sensor circuit malfunction	No signal for 2 sec. During engine cranking	1 driving cycle	1 driving cycle
P0340 (No.15)	Camshaft position sensor circuit malfunction	No signal during engine running	1 driving cycle	1 driving cycle
P0400	Exhaust gas recirculation flow malfunction detected	Excessive or insufficient EGR flow	2 driving cycles	Not applicable
P0420	Catalyst system efficiency below threshold	Output waveforms of HO2S-1 and HO2S-2 are similar. (Time from output voltage change of HO2S-1 to that of HO2S-2 is shorter than specification.)	2 driving cycles	Not applicable
P0443	Purge control valve circuit malfunction	Purge control valve circuit is open or shorted to ground	2 driving cycles	Not applicable
P0480	Radiator fan control circuit malfunction	Radiator cooling fan relay terminal voltage is low when cooling temp. is lower than specification	2 driving cycles	Not applicable
P0500 (No.16)	Vehicle speed sensor malfunction	No signal while running in “D” range or during fuel cut at decelerating	2 driving cycles	1 driving cycle
P0505 (No.26)	Idle control system malfunction	No closed signal to IAC valve is detected	2 driving cycles	1 driving cycle
P0601	Internal control module memory check sum error	Data write error (or check sum error) when written into ECM	2 driving cycles	Not applicable
P1450 (No.29)	Barometric pressure sensor circuit malfunction	Barometric pressure is lower or higher than specification. (or sensor malfunction)	1 driving cycle	1 driving cycle
P1451	Barometric pressure sensor performance problem	Difference between manifold absolute pressure (MAP sensor value) and barometric pressure (barometric pressure sensor value) is larger than specification during cranking.	2 driving cycles	Not applicable
P1500	Starter signal circuit malfunction	Starter signal is not inputed from engine cranking till its start and after or it is always inputted	2 driving cycles	Not applicable
P1510	ECM backup power source malfunction	No backup power after starting engine	1 driving cycle	Not applicable
P1600	Serial communication problem between ECM and TCM	No signal or check sum error while engine running	1 driving cycle	Not applicable
P1717	AT D-range signal circuit malfunction	No “D” range (park/neutral position signal) is inputted while vehicle running	2 driving cycles	Not applicable

DTC NO.	DETECTING ITEM	DETECTING CONDITION (DTC will set when detecting:)	MIL
P0702 P1702 (No.52)	Internal Malfunction of TCM	Refer to Section 7B	
P0705 (No.34)	Transmission Range Switch Circuit Malfunction		
☆P0710 (No.36 No.38)	Transmission Fluid Temperature Signal Circuit Malfunction		
P0715 (No.14)	Input/Turbine Speed Sensor Circuit Malfunction		
P0720 (No.31)	A/T VSS Signal Circuit Malfunction		
P0725 (No.35)	Engine Speed Input Circuit Malfunction		
P0730 (No.18)	Turbine Revolution Sensor Signal, A/T VSS Signal Circuit or Automatic Transmission Itself Malfunction		
P0741 (No.29)	Torque Converter Clutch Circuit Performance or Stuck off		
P0743 (No.25 No.26)	Lock-up Solenoid No.2 Circuit Malfunction		
P0753 (No.21 No.22)	Shift Solenoid No.1 Circuit		
P0758 (No.23 No.24)	Shift Solenoid No.2 Circuit		
P0763 (No.43)	Shift Solenoid No.3 Circuit		
P0768 (No.45)	Shift Solenoid No.4 Circuit		
P0773 (No.48)	Shift Solenoid No.5 Circuit		
P1700 (No.32 No.33)	Throttle Position Signal Input Malfunction		
P1709 (No.51)	Engine Coolant Temperature/Barometric Pressure Signal Malfunction		
P1717	AT D-range Signal Circuit Malfunction		
☆P1610 (No.89)	Secret Key and Password Not Registered	Refer to Section 8G	
☆P1611 (No.85)	Password Not Matched		
☆P1612 (No.86)	No Signal from ECM		
☆P1613 (No.87)	No Signal from Immobilizer		
☆P1614 (No.88)	Incorrect Signal		

Note:
- **For ( ) marked No. in DTC column, it is used for vehicle without EGR valve.**
- **For vehicle without EGR valve, DTC No.12 apears when none of the other codes is identified.**
- **With the generic scan tool, only star (☆) marked data in the above table can not be read.**

FAIL-SAFE TABLE

When any of the following DTCs is detected, ECM enters fail-safe mode as long as malfunction continues to exist but that mode is canceled when ECM detects normal condition after that.

DTC NO.	DETECTED ITEM	FAIL-SAFE OPERATION
P0105	Manifold absolute pressure circuit malfunction	● ECM uses value determined by throttle opening and engine speed. ● ECM stops EGR, EVAP purge and idle air control.
P0110	Intake air temp. circuit malfunction	ECM controls actuators assuming that intake air temperature is 20°C (68°F).
P0115	Engine coolant temp. circuit malfunction	ECM controls actuators assuming that engine coolant temperature is 80°C (176°F).
P0120	Throttle position circuit malfunction	ECM controls actuators assuming that throttle opening is 20°.
P0340	Camshaft position sensor circuit malfunction	ECM controls injection system sequential injection to synchronous injection.
P0500	Vehicle speed sensor malfunction	ECM stops idle air control.
P1450	Barometric pressure sensor low/ high input	ECM controls actuators assuming that barometric pressure is 100 kPa (760 mmHg).

VISUAL INSPECTION

Visually check following parts and systems.

INSPECTION ITEM	REFERRING SECTION
● Engine oil – – – – – level, leakage	Section 0B
● Engine coolant – – – – – level, leakage	Section 0B
● Fuel – – – – – level, leakage	Section 0B
● A/T fluid – – – – – level, leakage	Section 0B
● Air cleaner element – – – – – dirt, clogging	Section 0B
● Battery – – – – – fluid level, corrosion of terminal	
● Water pump belt – – – – – tension, damage	Section 0B
● Throttle cable – – – – – play, installation	Section 6E1
● Vacuum hoses of air intake system – – – – – disconnection, looseness, deterioration, bend	
● Connectors of electric wire harness – – – – – disconnection, friction	
● Fuses – – – – – burning	Section 8
● Parts – – – – – installation, bolt – – – – – looseness	
● Parts – – – – – deformation	
● Other parts that can be checked visually	
Also check following items at engine start, if possible	
● Malfunction indicator lamp	Section 6
● Charge warning lamp	Section 6H
● Engine oil pressure warning lamp — Operation	Section 8 (section 6 for pressure check)
● Engine coolant temp. meter	Section 8
● Fuel level meter	Section 8
● Tachometer, if equipped	
● Abnormal air being inhaled from air intake system	
● Exhaust system – – – – – leakage of exhaust gas, noise	
● Other parts that can be checked visually	

ENGINE BASIC INSPECTION

This check is very important for troubleshooting when ECM has detected no DTC and no abnormality has been found in visual inspection.
Follow the flow table carefully.

STEP	ACTION	YES	NO
1	Was “ENGINE DIAG. FLOW TABLE” performed?	Go to Step 2.	Go to “ENGINE DIAG. FLOW TABLE”.
2	Check battery voltage. Is it 11 V or more?	Go to Step 3.	Charge or replace battery.
3	Is engine cranked?	Go to Step 4.	Go to “DIAGNOSIS” in Section 6G.
4	Does engine start?	Go to Step 5.	Go to Step 7.
5	Check idle speed as follows: 1) Warm up engine to normal operating temp. 2) Shift transmission to neutral position for M/T (“P” position for A/T). 3) All of electrical loads are switched off. 4) Check engine idle speed with scan tool. See Fig. 1. Is it 650 – 750 r/min (700 – 800 r/min. for A/T vehicle)?	Go to Step 6.	Go to “SYMPTOM-TO-DIAGNOSIS MATRIX TABLE”.
6	Check ignition timing as follows: 1) When not using SUZUKI scan tool, disconnect scan tool from DLC and connect test switch terminal of monitor coupler to ground. See Fig. 2. When using SUZUKI scan tool, select “MISC” mode on SUZUKI scan tool and fix ignition timing to initial one. See Fig. 3. 2) Remove air cleaner bolt and clips and shift air cleaner position to observe ignition timing. 3) Using timing light (1), check initial ignition timing. See Fig. 4. Is it 5° ± 3° BTDC at specified idle speed?	Go to “SYMPTOM-TO-DIAGNOSIS MATRIX TABLE”.	Check ignition control related parts referring to Section 6F3.
7	Check fuel supply as follows: 1) Check to make sure that enough fuel is filled in fuel tank. 2) Turn ON ignition switch for 2 seconds and then OFF. See Fig. 5. Is fuel pressure from fuel feed hose (1) when ignition switch is turned ON?	Go to Step 9.	Go to Step 8.
8	Check fuel pump for operating. 1) Was fuel pump operating sound heard from fuel filler for about 2 seconds after ignition switch ON and stop?	Go to “DIAG. FLOW TABLE B-3”.	Go to “DIAG. FLOW TABLE B-2”.
9	Check ignition spark as follows: 1) Disconnect injector couplers. 2) Remove spark plugs and connect them to high tension cords. 3) Ground spark plugs. 4) Crank engine and check if each spark plug sparks. Is it in good condition?	Go to Step 10.	Go to “DIAGNOSIS” in Section 6F3.
10	Check fuel injector for operation as follows: 1) Install spark plugs and connect injector connectors. 2) Using sound scope (1), check operating sound of each injector (2) when cranking engine. See Fig. 6. Was injector operating sound heard from all injectors?	Go to “SYMPTOM-TO-DIAGNOSIS MATRIX TABLE”.	Go to “DIAG. FLOW TABLE B-1”.

Fig. 1 for Step 5

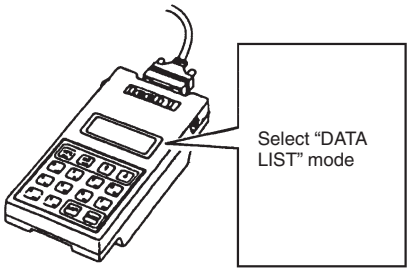

Fig. 2 for Step 6

When not using SUZUKI scan tool:

Fig. 3 for Step 6

When using SUZUKI scan tool

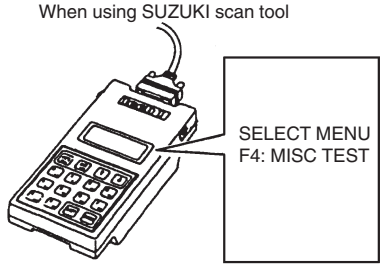

Fig. 4 for Step 6

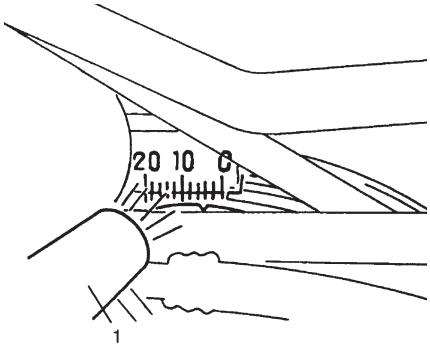

Fig. 5 for Step 7

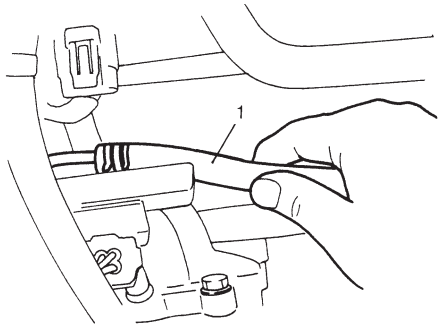

Fig. 6 for Step 10

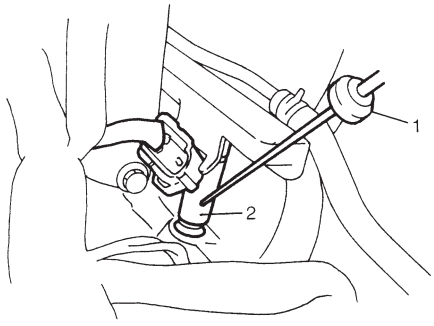

ENGINE DIAGNOSIS TABLE

Perform troubleshooting referring to following table when ECM has detected no DTC and no abnormality has been found in visual inspection and engine basic inspection previously.

Condition	Possible Cause	Referring Item
Hard Starting (Engine cranks OK)	**Ignition system out of order**	
	● Faulty spark plug	Spark plugs in Section 6F1
	● Leaky high-tension cord	High-tension cords in Section 6F1
	● Loose connection or disconnection of high-tension cords or lead wires	High-tension cords in Section 6F1
	● Faulty ignition coil	Ignition coil in Section 6F1
	Fuel system out of order	
	● Dirty or clogged fuel hose or pipe	Diagnostic Flow Table B-3
	● Malfunctioning fuel pump	Diagnostic Flow Table B-3
	● Air inhaling from intake manifold gasket or throttle body gasket	
	Engine and emission control system out of order	
	● Faulty idle air control system	Diagnostic Flow Table B-4
	● Faulty ECT sensor or MAP sensor	ECT sensor or MAP sensor in Section 6E
	● Faulty ECM	
	Low compression	Compression check in Section 6A1
	● Poor spark plug tightening or faulty gasket	Spark plugs in Section 6F1
	● Compression leak from valve seat	Valves inspection in Section 6A1
	● Sticky valve stem	Valves inspection in Section 6A1
	● Weak or damaged valve springs	Valve springs inspection in Section 6A1
	● Compression leak at cylinder head gasket	Cylinder head inspection in Section 6A1
	● Sticking or damaged piston ring	Cylinders, pistons and piston rings inspection in Section 6A1
	● Worn piston, ring or cylinder	Cylinders, pistons and piston rings inspection in Section 6A1
	Others	
	● Malfunctioning PCV valve	PCV system in Section 6E

Condition	Possible Cause]	Referring Item
Low oil pressure	● Improper oil viscosity	Engine oil and oil filter change in Section 0B
	● Malfunctioning oil pressure switch	Oil pressure switch inspection in Section 8
	● Clogged oil strainer	Oil pan and oil pump strainer cleaning in Section 6A1
	● Functional deterioration of oil pump	Oil pump in Section 6A1
	● Worn oil pump relief valve	Oil pump in Section 6A1
	● Excessive clearance in various sliding parts	
Engine noise Note: Before checking mechanical noise, make sure that: ● Specified spark plug in used. ● Specified fuel is used.	**Valve noise**	
	● Improper valve lash	Valve lash in Section 6A1
	● Worn valve stem and guide	Valves inspection in Section 6A1
	● Weak or broken valve spring	Valve springs inspection in Section 6A1
	● Warped or bent valve	Valves inspection in Section 6A1
	Piston, ring and cylinder noise	
	● Worn piston, ring and cylinder bore	Pistons and cylinders inspection in Section 6A1
	Connecting rod noise	
	● Worn rod bearing	Crank pin and connecting rod bearing inspection in Section 6A1
	● Worn crank pin	Crank pin and connecting rod bearing inspection in Section 6A1
	● Loose connecting rod nuts	Connecting rod installation in Section 6A1
	● Low oil pressure	Previously outlined
	Crankshaft noise	
	● Low oil pressure	Previously outlined
	● Worn bearing	Crankshaft and bearing inspection in Section 6A1
	● Worn crankshaft journal	Crankshaft and bearing inspection in Section 6A1
	● Loose bearing cap bolts	Crankshaft inspection in Section 6A1
	● Excessive crankshaft thrust play	Crankshaft thrust play inspection in Section 6A1

Condition	Possible Cause	Referring Item
Overheating	● Inoperative thermostat	Thermostat in Section 6B
	● Poor water pump performance	Water pump in Section 6B
	● Clogged or leaky radiator	Radiator in Section 6B
	● Improper engine oil grade	Engine oil and oil filter change in Section 0B
	● Clogged oil filter or oil strainer	Oil pressure check in Section 6A1
	● Poor oil pump performance	Oil pressure check in Section 6A1
	● Faulty radiator fan control system	Radiator fan control system in Section 6E
	● Dragging brakes	Trouble diagnosis in Section 5
	● Slipping clutch	Trouble diagnosis in Section 7C
	● Blown cylinder head gasket	Cylinder head in Section 6A1
Poor gasoline mileage	**Ignition system out of order**	
	● Leaks or loose connection of high-tension cord	High-tension cords in Section 6F1
	● Faulty spark plug (improper gap, heavy deposits and burned electrodes, etc.)	Spark plugs in Section 6F1
	Engine and emission control system out of order	
	● Malfunctioning EGR valve (if equipped)	EGR system in Section 6E
	● High idle speed	Refer to item “Improper engine idle speed” previously outlined
	● Poor performance of TP sensor, ECT sensor or MAP sensor	TP sensor, ECT sensor or MAP sensor in Section 6E
	● Faulty EGR valve (if equipped)	EGR system in Section 6E
	● Faulty fuel injector(s)	Diagnostic Flow Table B-1
	● Faulty ECM	
	Low compression	Previously outlined
	Others	
	● Poor valve seating	Valves inspection in Section 6A1
	● Dragging brakes	Trouble diagnosis in Section 5
	● Slipping clutch	Trouble diagnosis in Section 7C
	● Thermostat out of order	Thermostat in Section 6B
	● Improper tire pressure	Refer to Section 3F
Excessive engine oil consumption	**Oil leakage**	
	● Blown cylinder head gasket	Cylinder head in Section 6A1
	● Leaky camshaft oil seals	Camshaft in Section 6A1
	Oil entering combustion chamber	
	● Sticky piston ring	Piston cleaning in Section 6A1
	● Worn piston and cylinder	Pistons and cylinders inspection in Section 6A1
	● Worn piston ring groove and ring	Pistons inspection in Section 6A1
	● Improper location of piston ring gap	Pistons assembly in Section 6A1
	● Worn or damaged valve stem seal	Valves removal and installation in Section 6A1
	● Worn valve stem	Valves inspection in Section 6A1

Condition	Possible Cause	Referring Item
Engine hesitates (Momentary lack of response as accelerator is depressed. Can occur at all vehicle speeds. Usually most severe when first trying to make vehicle move, as from a stop sign.)	**Ignition system out of order** ● Spark plug faulty or plug gap out of adjustment ● Leaky high-tension cord **Fuel system out of order** ● Fuel pressure out of specification **Engine and emission control system out of order** ● Malfunctioning EGR valve (if equipped) ● Poor performance of TP sensor, ECT sensor or MAP sensor ● Faulty fuel injector ● Faulty ECM **Engine overheating** **Low compression**	 Spark plugs in Section 6F1 High-tension cords in Section 6F1 Diagnostic Flow Table B-3 Trouble diagnosis in Section 6 EGR system in section 6E TP sensor, ECT sensor or MAP sensor in Section 6E Diagnostic Flow Table B-1 Refer to “Overheating” section Previously outlined
Surge (Engine power variation under steady throttle or cruise. Feels like vehicle speeds up and down with no change in accelerator pedal.)	**Ignition system out of order** ● Leaky or loosely connected high-tension cord ● Faulty spark plug (excess carbon deposits, improper gap, and burned electrodes, etc.) **Fuel system out of order** ● Variable fuel pressure ● Kinky or damaged fuel hose and lines ● Faulty fuel pump (clogged fuel filter) **Engine and emission control system out of order** ● Malfunctioning EGR valve ● Poor performance of MAP sensor ● Faulty fuel injector ● Faulty ECM	 High-tension cords in Section 6F1 Spark plugs in Section 6F1 Diagnostic Flow Table B-3 EGR system in Section 6E MAP sensor in Section 6E Diagnostic Flow Table B-1
Excessive detonation (Engine makes continuously sharp metallic knocks that change with throttle opening. Sounds like pop corn popping.)	**Engine overheating** **Ignition system out of order** ● Faulty spark plug ● Loose connection of high-tension cord **Fuel system out of order** ● Clogged fuel filter (faulty fuel pump) or fuel lines ● Air inhaling from intake manifold or throttle body gasket **Engine and emission control system out of order** ● Malfunctioning EGR valve (if equipped) ● Poor performance of knock sensor, ECT sensor or MAP sensor ● Faulty fuel injector(s). ● Faulty ECM ● Excessive combustion chamber deposits	Refer to “Overheating” section Spark plugs in Section 6F1 High-tension cords in Section 6F1 Diagnostic Flow Table B-1 or B-2 Trouble diagnosis in Section 6 EGR system in Section 6E Knock sensor in Section 6, ECT sensor or MAP sensor in Section 6E Diagnostic Flow Table B-1 Piston and cylinder head cleaning in Section 6A1

Condition	Possible Cause	Referring Item
Engine has no power	**Ignition system out of order**	
	● Faulty spark plug	Spark plugs in Section 6F1
	● Faulty ignition coil with ignitor	Ignition coil in Section 6F1
	● Leaks, loose connection or disconnection of high-tension cord	High-tension cords in Section 6F1
	● Faulty knock sensor	Knock sensor malfunction in this section
	Engine overheating	Refer to “Overheating” section
	Fuel system out of order	
	● Clogged fuel hose or pipe	Diagnostic Flow Table B-3 in Section 6
	● Malfunctioning fuel pump	Diagnostic Flow Table B-2
	● Air inhaling from intake manifold gasket or throttle body gasket	
	Engine and emission control system out of order	
	● Malfunctioning EGR valve (if equipped)	EGR system inspection in Section 6E
	● Maladjusted accelerator cable play	Accelerator cable play in Section 6E
	● Poor performance of TP sensor, ECT sensor or MAP sensor	TP sensor, ECT sensor or MAP sensor in Section 6E
	● Faulty fuel injector(s)	Diagnostic Flow Table B-1
	● Faulty ECM	
	Low compression	Previously outlined
	Others	
	● Dragging brakes	Trouble diagnosis in Section 5
	● Slipping clutch	Trouble diagnosis in Section 7C

Condition	Possible Cause	Referring Item
Improper engine idling or engine fails to idle	**Ignition system out of order**	
	● Faulty spark plug	Spark plugs in Section 6F1
	● Leaky or disconnected high-tension cord	High-tension cords in Section 6F1
	● Faulty ignition coil with ignitor	Ignition coil in Section 6F1
	Fuel system out of order	
	● Fuel pressure out of specification	Diagnostic Flow Table B-3 in Section 6
	● Leaky manifold, throttle body, or cylinder head gasket	
	Engine and emission control system out of order	
	● Malfunctioning EGR valve (if equipped)	EGR system in Section 6E
	● Faulty idle air control system	Diagnostic Flow Table B-4
	● Faulty evaporative emission control system	EVAP control system in Section 6E
	● Faulty EGR system (if equipped)	EGR system in Section 6E
	● Faulty fuel injector(s)	Diagnostic Flow Table B-1
	● Poor performance of ECT sensor, TP sensor or MAP sensor	ECT sensor, TP sensor or MAP sensor in Section 6E
	● Faulty ECM	
	Engine overheating	Refer to “Overheating” section
	Low compression	Previously outlined
	Others	
	● Loose connection or disconnection of vacuum hoses	
	● Malfunctioning PCV valve	PCV system in Section 6E

Condition	Possible Cause	Referring Item
Excessive hydrocarbon (HC) emission or carbon monoxide (CO)	**Ignition system out of order**	
	● Faulty spark plug	Spark plugs in Section 6F1
	● Leaky or disconnected high-tension cord	High-tension cords in Section 6F1
	● Faulty ignition coil with ignitor	Ignition coil assembly in Section 6F1
	Low compression	Refer to “Low compression” section
	Engine and emission control system out of order	
	● Lead contamination of three way catalytic converter	Check for absence of filler neck restrictor
	● Faulty evaporative emission control system	EVAP control system in Section 6E
	● Fuel pressure out of specification	Diagnostic Flow Table B-3
	● Closed loop system (A/F feed back compensation) fails	
	– Faulty TP sensor	TP sensor in Section 6E
	– Poor performance of ECT sensor or MAP sensor	ECT sensor or MAP sensor in Section 6E
	● Faulty injector(s)	Diagnostic Flow Table B-1
	● Faulty ECM	
	Others	
	● Engine not at normal operating temperature	
	● Clogged air cleaner	
	● Vacuum leaks	
Excessive nitrogen oxides (NOx) emission	**Ignition system out of order**	
	● Improper ignition timing	See section 6F1
	Engine and emission control system out of order	
	● Lead contamination of catalytic converter	Check for adsence of filler neck restrictor.
	● Faulty EGR system (if equipped)	EGR system in Section 6E
	● Fuel pressure out of specification	Diagnostic Flow Table B-3
	● Closed loop system (A/F feed back compensation) fails	
	– Faulty TP sensor	TP sensor in Section 6E
	– Poor performance of ECT sensor or MAP sensor	ECT sensor or MAP sensor in Section 6E
	● Faulty injector(s)	Diagnostic Flow Table B-1
	● Faulty ECM	

SCAN TOOL DATA

As the data values given below are standard values estimated on the basis of values obtained from the normally operating vehicles by using a scan tool, use them as reference values. Even when the vehicle is in good condition, there may be cases where the checked value does not fall within each specified data range. Therefore, judgment as abnormal should not be made by checking with these data alone.
Also, conditions in the below table that can be checked by the scan tool are those detected by ECM and output from ECM as commands and there may be cases where the engine or actuator is not operating (in the condition) as indicated by the scan tool. Be sure to use the timing light to check the ignition timing.

NOTE:
- **With the generic scan tool, only star (☆) marked data in the table below can be read.**
- **The triangle (Δ) marked data in the table below can not be read for vehicle without EGR valve.**
- **When checking the data with the engine running at idle or racing, be sure to shift M/T gear to the neutral gear position and A/T gear to the "Park" position and pull the parking brake fully. Also, if nothing or "no load" is indicated, turn OFF A/C, all electric loads, P/S and all the other necessary switches.**

		SCAN TOOL DATA	VEHICLE CONDITION		NORMAL CONDITION/ REFERENCE VALUES
	☆	FUEL SYSTEM B1 (FUEL SYSTEM STATUS)	At specified idle speed after warming up		CLOSED (closed loop)
	☆	CALC LOAD (CALCULATED LOAD VALUE)	At specified idle speed with no load after warming up		3 – 9%
			At 2500 r/min with no load after warming up		12 – 17%
	☆	COOLANT TEMP. (ENGINE COOLANT TEMP.)	At specified idle speed after warming up		85 – 100°C, 185 – 212°F
	☆	SHORT FT BI (SHORT TERM FUEL TRIM)	At specified idle speed after warming up		–20 – +20%
	☆	LONG FT BI (LONG TERM FUEL TRIM)	At specified idle speed after warming up		–15 – +15%
	☆	MAP (INTAKE MANIFOLD ABSOLUTE PRESSURE)	At specified idle speed with no load after warming up		24 – 37 kPa, 180 – 280 mmHg
	☆	ENGINE SPEED	At idling with no load after warming up		Desired idle speed ± 50 r/min
	☆	VEHICLE SPEED	At stop		0 km/h, 0 MPH
	☆	IGNITION ADVANCE (IGNITION TIMING ADVANCE FOR NO.1 CYLINDER)	At specified idle speed with no load after warming up		3 – 11° BTDC
	☆	INTAKE AIR TEMP.	At specified idle speed after warming up		Ambient temp. +15°C (59°F) –5°C (23°F)
	☆	MAF (MASS AIR FLOW RATE)	At specified idle speed with no load after warming up		1 – 4 gm/sec
			At 2500 r/min with no load after warming up		4 – 9 gm/sec
	☆	THROTTLE POS (ABSOLUTE THROTTLE POSITION)	Ignition switch ON/engine stopped	Throttle valve fully closed	7 – 18%
				Throttle valve fully open	70 – 90%
	☆	O2S B1 S1 (HEATED OXYGEN SENSOR-1)	At specified idle speed after warming up		0.05 – 0.95 V
Δ	☆	O2S B1 S2 (HEATED OXYGEN SENSOR-2)	When engine is running at 2000 r/min. for 3 min or longer after warming up.		0 – 0.95 V
Δ	☆	O2S FT B1 S1	At specified idle speed after warming up		–20 – +20%
Δ	☆	DIS. WITH MIL ON	——		——

		SCAN TOOL DATA	CONDITION		NORMAL CONDITION/ REFERENCE VALUES	
		DESIRED IDLE (DESIRED IDLE SPEED)	At idling with no load after warming up, M/T at neutral, A/T at “P” range		M/T	700 r/min
					A/T	750 r/min
		TP SENSOR VOLT (THROTTLE POSITION SENSOR OUTPUT VOLTAGE)	Ignition switch ON/engine stopped	Throttle valve fully closed	More than 0.2 V	
				Throttle valve fully open	Less than 4.8 V	
		INJ PULSE WIDTH (FUEL INJECTION PULSE WIDTH)	At specified idle speed with no load after warming up		2.0 – 3.6 msec.	
			At 2500 r/min with no load after warming up		2.0 – 3.6 msec.	
		IAC FLOW DUTY (IDLE AIR CONTROL FLOW DUTY)	At idling with no load after warming up		5 – 25%	
		TOTAL FUEL TRIM	At specified idle speed after warming up		–35 – +35%	
		BATTERY VOLTAGE	Ignition switch ON/engine stop		10 – 14 V	
		CANIST PRG DUTY (EVAP CANISTER PURGE FLOW DUTY)	————		0 – 100%	
		CLOSED THROT POS (CLOSED THROTTLE POSITION)	Throttle valve at idle position		ON	
			Throttle valve opens larger than idle position		OFF	
		FUEL CUT	When engine is at fuel cut condition		ON	
			Other than fuel cut condition		OFF	
		RADIATOR FAN (RADIATOR FAN CONTROL RELAY)	Ignition switch ON	Engine coolant temp.: Lower than 92.5°C (199°F)	OFF	
				Engine coolant temp.: 97.5°C (208°F) or higher	ON	
		ELECTRIC LOAD	Ignition switch ON/Headlight, small light, heater fan and rear window defogger all turned OFF		OFF	
			Ignition switch ON/Headlight, small light, heater fan or rear window defogger turned ON		ON	
		A/C SWITCH	Engine running after warming up, A/C not operating		OFF	
			Engine running after warming up, A/C operating		ON	
		PNP SIGNAL (PARK/ NEUTRAL POSITION SIGNAL) A/T only	Ignition switch ON	Selector lever in “P” or “N” position	P/N Range	
				Selector lever in “R”, “D”, “2” or “L” position	D Range	
Δ		EGR VALVE	At specified idle speed after warming up		0%	
Δ		FUEL TANK LEVEL	————		0 – 100%	
		BAROMETRIC PRESS	————		Display the barometric pressure	
		FUEL PUMP	Within 3 seconds after ignition switch ON or engine running		ON	
			Engine stop at ignition switch ON		OFF	
		BRAKE SW	Ignition switch ON	Brake pedal is depressing	ON	
				Brake pedal is releasing	OFF	
		BLOWER FAN	Ignition switch ON	Blower fan switch ON	ON	
				Blower fan switch OFF	OFF	
		A/C MAG CLUTCH	Ignition switch ON	A/C switch ON	ON	
				A/C switch OFF	OFF	

SCAN TOOL DATA DEFINITIONS

FUEL SYSTEM (FUEL SYSTEM STATUS)

Air/fuel ratio feedback loop status displayed as either open or closed loop. Open indicates that ECM ignores feedback from the exhaust oxygen sensor. Closed indicates final injection duration is corrected for oxygen sensor feedback.

CALC LOAD (CALCULATED LOAD VALUE, %)

Engine load displayed as a percentage of maximum possible load. Value is calculated mathematically using the formula: actual (current) intake air volume ÷ maximum possible intake air volume x 100%.

COOLANT TEMP. (ENGINE COOLANT TEMPERATURE, °C, °F)

It is detected by engine coolant temp. sensor

SHORT FT B1 (SHORT TERM FUEL TRIM, %)

Short term fuel trim value represents short term corrections to the air/fuel mixture computation. A value of 0 indicates no correction, a value greater than 0 means an enrichment correction, and a value less than 0 implies an enleanment correction.

LONG FT B1 (LONG TERM FUEL TRIM, %)

Long term fuel trim Value represents long term corrections to the air/fuel mixture computation. A value of 0 indicates no correction, a value greater than 0 means an enrichment correction, and a value less than 0 implies an enleanment correction.

MAP (INTAKE MANIFOLD ABSOLUTE PRESSURE, kPa, inHg)

It is detected by manifold absolute pressure sensor and used (among other things) to compute engine load.

ENGINE SPEED (rpm)

It is computed by reference pulses from crankshaft position sensor.

VEHICLE SPEED (km/h, MPH)

It is computed based on pulse signals from vehicle speed sensor.

IGNITION ADVANCE (IGNITION TIMING ADVANCE FOR NO.1 CYLINDER, °)

Ignition timing of NO.1 cylinder is commanded by ECM. The actual ignition timing should be checked by using the timing light.

INTAKE AIR TEMP. (°C, °F)

It is detected by intake air temp. sensor and used to determine the amount of air passing into the intake manifold as air density varies with temperature.

MAF (MASS AIR FLOW RATE, gm/s, lb/min)

It represents total mass of air entering intake manifold which is computed based on signals from MAP sensor, IAT sensor, TP sensor, etc.

THROTTLE POS (ABSOLUTE THROTTLE POSITION, %)

When throttle position sensor is fully closed position, throttle opening is indicated as 0% and 100% full open position.

OXYGEN SENSOR B1 S1 (HEATED OXYGEN SENSOR-1, V)

It indicates output voltage of HO2S-1 installed on exhaust manifold (pre-catalyst).

OXYGEN SENSOR B1 S2 (HEATED OXYGEN SENSOR-2, V)

It indicates output voltage of HO2S-2 installed on exhaust pipe (post-catalyst). It is used to detect catalyst deterioration.

DESIRED IDLE (DESIRED IDLE SPEED, rpm)

The Desired Idle Speed is an ECM internal parameter which indicates the ECM requested idle. If the engine is not running, this number is not valid.

TP SENSOR VOLT (THROTTLE POSITION SENSOR OUTPUT VOLTAGE, V)

The Throttle Position Sensor reading provides throttle valve opening information in the form of voltage.

INJ PULSE WIDTH (FUEL INJECTION PULSE WIDTH, msec.)

This parameter indicates time of the injector drive (valve opening) pulse which is output from ECM (but injector drive time of NO.1 cylinder for multiport fuel injection).

IAC FLOW DUTY (IDLE AIR (SPEED) CONTROL DUTY, %)

This parameter indicates current flow time rate within a certain set cycle of IAC valve (valve opening rate) which controls the amount of bypass air (idle speed).

TOTAL FUEL TRIM (%)

The value of Total Fuel Trim is obtained by putting values of Short Term Fuel Trim and Long Term Fuel Trim together. This value indicates how much correction is necessary to keep the air/fuel mixture stoichiometrical.

BATTERY VOLTAGE (V)

This parameter indicates battery positive voltage inputted from main relay to ECM.

CANIST PURGE DUTY (EVAP CANISTER PURGE FLOW DUTY, %)

This parameter indicates valve ON (valve open) time rate within a certain set cycle of EVAP purge solenoid valve which controls the amount of EVAP purge.
0% means that the purge valve is completely closed while 100% is a fully open valve.

CLOSED THROTTLE POSITION (ON/OFF)

This parameter will read ON when throttle valve is fully closed, or OFF when the throttle is not fully closed.

FUEL CUT (ON/OFF)

ON : Fuel being cut (output signal to injector is stopped)
OFF : Fuel not being cut

RADIATOR FAN (RADIATOR FAN CONTROL RELAY, ON/OFF)

ON : Command for radiator fan control relay operation being output.
OFF : Command for relay operation not being output.

ELECTRIC LOAD (ON/OFF)

ON : Headlight, small light, heater fan or rear window defogger ON signal inputted.
OFF : Above electric loads all turned OFF.

A/C SWITCH (ON/OFF)

ON : Command for A/C operation being output from ECM to A/C amplifier.
OFF : Command for A/C operation not being output.

FUEL TANK LEVEL (%)

This parameter indicates approximate fuel level in the fuel tank. As the detectable range of the fuel level sensor is set as 0 to 100%, however, with some models whose fuel tank capacity is smaller, the indicated fuel level may be only 70% even when the fuel tank is full.

PNP SIGNAL (PARK/NEUTRAL POSITION SIGNAL, P/N RANGE or D RANGE)

It is detected by signal from TCM.
D range : A/T is in “R”, “D”, “2” or “L” range.
P/N range : A/T is in “P” or “N” range or the above signal is not inputted from TCM.

EGR VALVE (%)

This parameter indicates opening rate of EGR valve which controls the amount of EGR flow.

INSPECTION OF ECM AND ITS CIRCUITS

ECM and its circuits can be checked at ECM wiring couplers by measuring voltage and resistance.

CAUTION:
ECM cannot be checked by itself. It is strictly prohibited to connect voltmeter or ohmmeter to ECM with coupler disconnected from it.

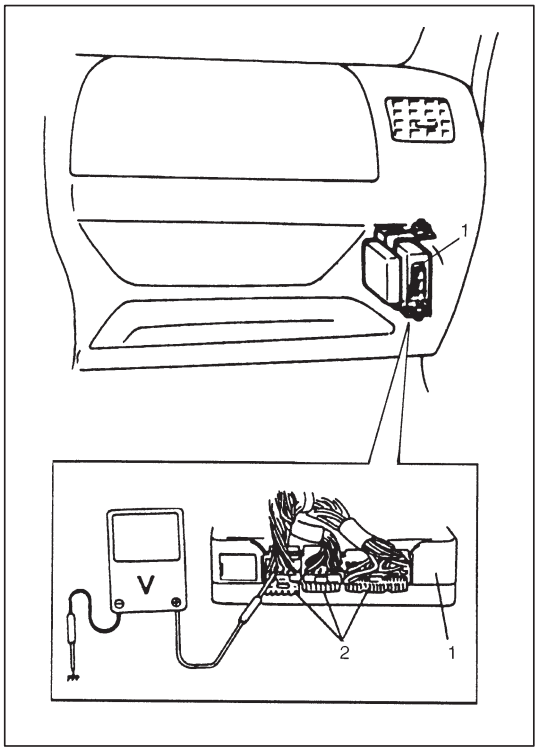

Voltage Check

1) Remove ECM (1) from body referring to Section 6E.
2) Check voltage at each terminal of couplers (2) connected.

NOTE:
As each terminal voltage is affected by the battery voltage, confirm that it is 11 V or more when ignition switch is ON.

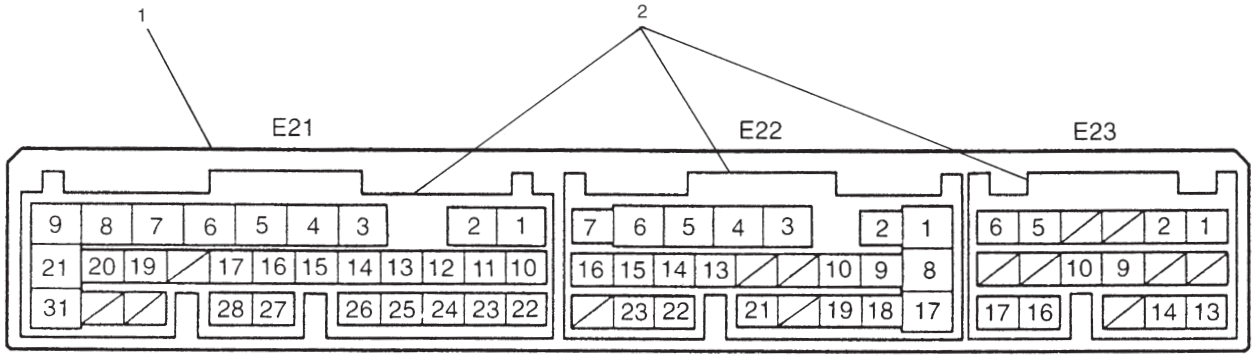

1. ECM
2. ECM couplers (Viewed from harness side)

	TERMINAL NO.	CIRCUIT	NORMAL VOLTAGE	CONDITION
CONNECTOR "E21"	1	Ground	—	—
	2	Ground	—	—
	3	Ground	—	—
	4	EVAP canister purge valve	10 – 14 V	Ignition switch ON
	5	Engine coolant temp. and barometric pressure signal for TCM (A/T)	Indication deflection repeated 0 V and 10 – 14 V	Ignition switch ON
	6	Idle air control valve	0 – 13 V	At specified idle speed after engine warmed up
	7	Heater of HO2S-1	10 – 14 V	Ignition switch ON
	8	Fuel injector NO.4	10 – 14 V	Ignition switch ON
	9	Fuel injector NO.1	10 – 14 V	Ignition switch ON
	10	Sensor ground	—	—
	11	Camshaft position sensor	0 – 0.8 V and 4 – 6 V	Ignition switch ON
	12	Knock sensor	2.1 – 2.9 V	Ignition switch ON
	13	Heater oxygen sensor-1	Refer to DTC P0130 diag. flow table	
	14	Engine coolant temp. sensor	0.55 – 0.95 V	Ignition switch ON Engine coolant temp.: 80°C (176°F)
	15	Intake air temp. sensor	2.0 – 2.7 V	Ignition switch ON Intake air temp.: 20°C (68°F)
	16	Test switch terminal (Vehicle without EGR VALVE)	4 – 6 V	Ignition switch ON
	17	Electric load signal (+)	0 V	Ignition switch ON Small light and rear defogger OFF
			10 – 14 V	Ignition switch ON Small light and rear defogger ON
	18	—	—	—
	19	Ignition coil #2	—	—
	20	Ignition coil #1	—	—
	21	Fuel injector NO.2	10 – 14 V	Ignition switch ON
	22	Power source for sensor	4.75 – 5.25 V	Ignition switch ON
	23	Crankshaft position sensor (+)	—	—
	24	Crankshaft position sensor (–)	—	—
	25	Shield ground	—	—
	26	Manifold absolute pressure sensor	3.3 – 4.0 V	Ignition switch ON Barometric pressure: 100 kPa (760 mmHg)
	27	Diag. Switch terminal (Vehicle without EGR VALVE)	4 – 6 V	Ignition switch ON
	28	Monitor output (Vehicle without EGR VALVE)	—	—
	29	Blank	—	—
	30	Blank	—	—
	31	Fuel injector NO.3	10 – 14 V	Ignition switch ON

TERMINAL NO.		CIRCUIT	NORMAL VOLTAGE	CONDITION
CONNECTOR "E22"	1	A/C compressor clutch	0 V	Ignition switch ON
	2	EGR valve (stepper motor coil 1) (if equipped)	0 – 1 V	More than 3 seconds after ignition switch ON
			0 – 14 V	After engine start
	3	Data link connector	10 – 14 V	Ignition switch ON
	4	Heater of HO2S-2 (Vehicle with EGR valve)	10 – 14 V	Ignition switch ON
	5	Power source	10 – 14 V	Ignition switch ON
	6	Power source	10 – 14 V	Ignition switch ON
	7	Power source for back-up	10 – 14 V	Ignition switch ON and OFF
	8	EGR valve (stepper motor coil 3)(if equipped)	10 – 14 V	More than 3 seconds after ignition switch ON
			0 – 14 V	After engine start
	9	EGR valve (stepper motor coil 2)(if equipped)	10 – 14 V	More than 3 seconds after ignition switch ON
			0 – 14 V	After engine start
	10	Main relay	10 – 14 V	Ignition switch OFF
			0.4 – 1.5 V	Ignition switch ON
	11	Blank	—	—
	12	Blank	—	—
	13	Heated oxygen sensor-2 (Vehicle with EGR valve)	Refer to DTC P0130 diag. flow table	
	14	D-range ID-up signal (A/T)	10 – 14 V	Ignition switch ON
	15	R-range signal (A/T)	0 V	Ignition switch ON
	16	A/C (input) signal	10 – 14 V	Ignition switch ON A/C switch OFF
			0 – 2 V	Ignition switch ON A/C switch ON
	17	EGR valve (stepper motor coil 4)(if equipped)	0 – 1 V	More than 3 seconds after ignition switch ON
			0 – 14 V	After engine start
	18	Radiator fan control relay	10 – 14 V	Ignition switch ON Engine coolant temp.: Below 92.5°C (199°F)
			0 – 1 V	Ignition switch ON Engine coolant temp.: 97.5°C (208°F) or higher
	19	Fuel pump relay	0 – 1 V	For 2 seconds after ignition switch ON
			10 – 14 V	After the above time
	20	Shield ground	—	—
	21	Throttle opening signal for TCM (A/T)	Indication deflection repeated 0 V and 10 – 14 V	Ignition switch ON
	22	Fuel level sensor (gauge) (Vehicle with EGR valve)	0 – 2 V	Ignition switch ON Fuel tank fully filled
			4.5 – 7.5 V	Ignition switch ON Fuel tank emptied
	23	Serial data for TCM	10 – 14 V and 0 – 1 V	Ignition switch ON
	24	Blank	—	—

TERMINAL NO.		CIRCUIT	NORMAL VOLTAGE	CONDITION
CONNECTOR "E23"	1	Malfunction indicator lamp	0 – 1 V	Ignition switch ON
			10 – 14 V	When engine running
	2	Vehicle speed sensor	Indicator deflection repeated 0 V and 4 – 6 V	Ignition switch ON Front left tire turned slowly with front right tire locked
	3	Blank	—	—
	4	Blank	—	—
	5	Throttle position sensor	0.2 – 1.0 V	Ignition switch ON Throttle valve at idle position
			2.8 – 4.8 V	Ignition switch ON Throttle valve at full open position
	6	Ignition switch	10 – 14 V	Ignition switch ON
	7	Blank	—	—
	8	Blank	—	—
	9	Stop lamp switch	0 V	Ignition switch ON Stop lamp switch OFF
			10 – 14 V	Ignition switch ON Stop lamp switch ON
	10	Sensor ground	—	—
	11	Blank	—	—
	12	Blank	—	—
	13	Electric load signal (–)	0 – 2 V	Ignition switch ON Blower fan turned OFF
			10 – 14 V	Ignition switch ON Blower fan turned ON
	14	A/C EVAP temp. sensor	—	—
	15	Blank	—	—
	16	Tachometer (if equipped)	0 – 1 V	Ignition switch ON
	17	Engine start switch (Engine start signal)	6 – 12 V	While engine cranking
			0 V	Other than above

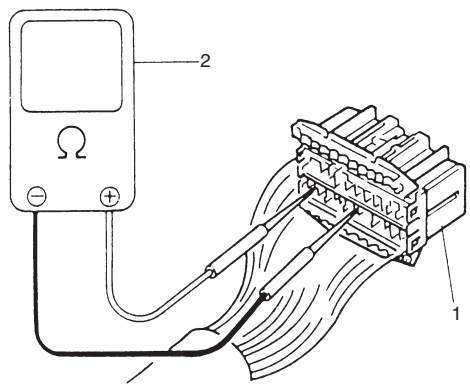

1. ECM coupler disconnected
2. Ohmmeter

Resistance Check

1) Disconnect ECM couplers from ECM with ignition switch OFF.

> **CAUTION:**
> **Never touch terminals of ECM itself or connect voltmeter or ohmmeter.**

2) Check resistance between each terminal of couplers disconnected.

> **CAUTION:**
> - **Be sure to connect ohmmeter probe from wire harness side of coupler.**
> - **Be sure to turn OFF ignition switch for this check.**
> - **Resistance in table below represents that when parts temperature is 20°C (68°F).**

TERMINALS	CIRCUIT	STANDARD RESISTANCE
E21-7 to E23-6	HO2S-1 heater	11.7 – 15.6 Ω
E22-4 to E23-6	HO2S-2 heater	11.7 – 15.6 Ω
E21-9 to E22-5/6	No.1 injector	12.0 – 13.0 Ω
E21-21 to E22-5/6	No.2 injector	12.0 – 13.0 Ω
E21-31 to E22-5/6	No.3 injector	12.0 – 13.0 Ω
E21-8 to E22-5/6	No.4 injector	12.0 – 13.0 Ω
E22-2 to E22-5/6	EGR valve (stepper motor coil 4)	20 – 24 Ω
E22-9 to E22-5/6	EGR valve (stepper motor coil 3)	20 – 24 Ω
E22-8 to E22-5/6	EGR valve (stepper motor coil 2)	20 – 24 Ω
E22-17 to E22-5/6	EGR valve (stepper motor coil 1)	20 – 24 Ω
E21-4 to E22-5/6	EVAP canister purge valve	30 – 34 Ω
E22-19 to E23-6	Fuel pump relay	70 – 110 Ω
E22-1 to Body ground	A/C compressor clutch	3 – 4.5 Ω
E22-18 to E22-5/6	Radiator fan control relay	70 – 110 Ω
E22-10 to E22-7	Main relay	70 – 110 Ω
E21-1 to Body ground	Ground	Continuity
E21-2 to Body ground	Ground	Continuity
E21-3 to Body ground	Ground	Continuity

COMPONENT LOCATION

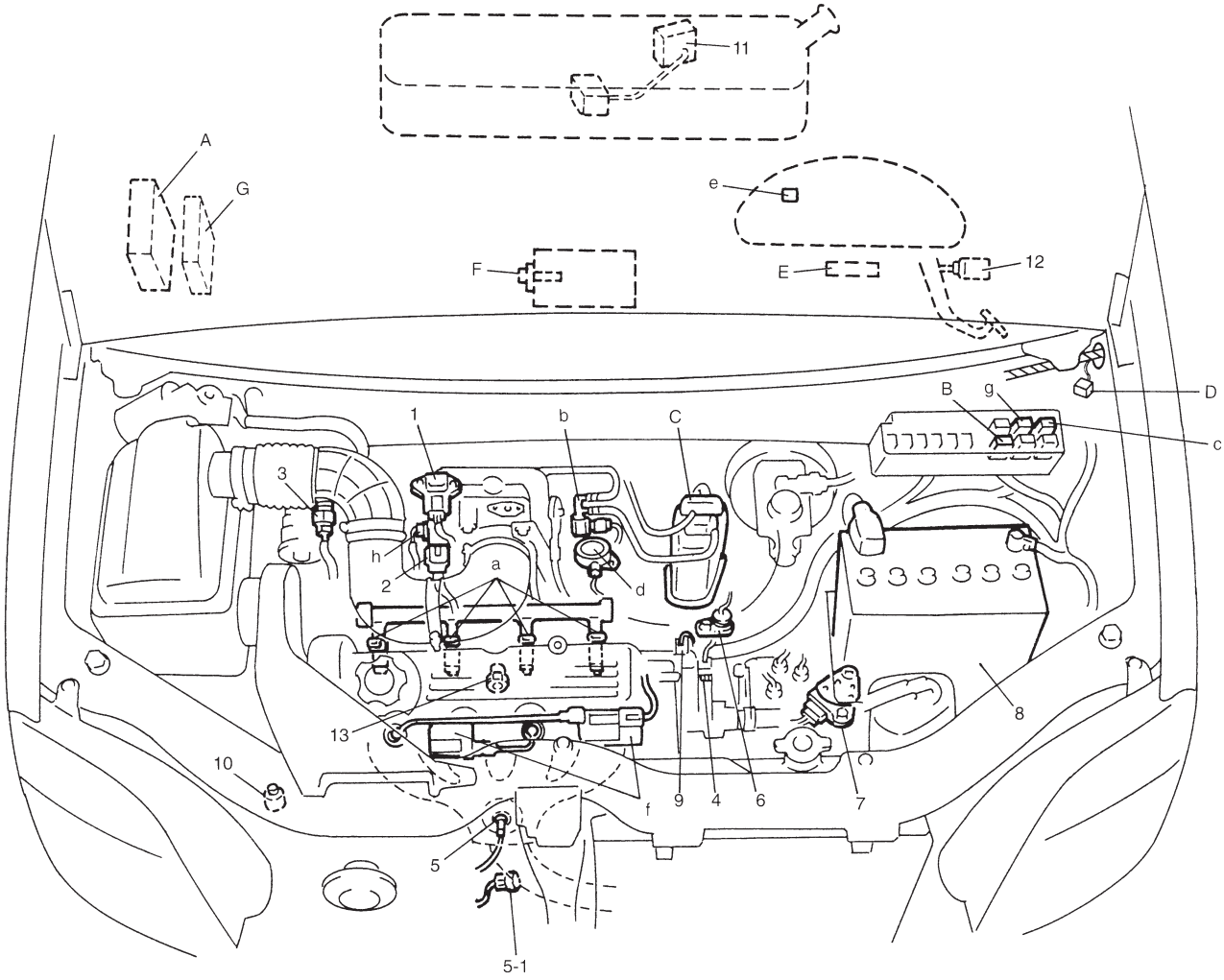

INFORMATION SENSORS
1. MAP sensor
2. TP sensor
3. IAT sensor
4. ECT sensor
5. Heated oxygen sensor-1
5-1. Heated oxygen sensor-2 (if equipped)
6. VSS
7. Transmission range switch (A/T)
8. Battery
9. CMP sensor
10. CKP sensor
11. Fuel level sensor (gauge) (in fuel tank)
12. Stop lamp switch
13. Knock sensor

CONTROL DEVICES
a: Fuel injector
b: EVAP canister purge valve
c: Fuel pump relay
d: EGR valve (step motor) (if equipped)
e: Malfunction indicator lamp
f: Ignition coil assembly
g: Radiator fan control relay
h: IAC valve

OTHERS
A: ECM
B: Main relay
C: EVAP canister
D: Monitor connector (If equipped)
E: Data link connector
F: A/C EVAP thermistor (if equipped)
G: Transmission control module (A/T)

TABLE A-1 MALFUNCTION INDICATOR LAMP CIRCUIT CHECK – LAMP DOES NOT COME "ON" AT IGNITION SWITCH ON (BUT ENGINE AT STOP)

CIRCUIT DESCRIPTION

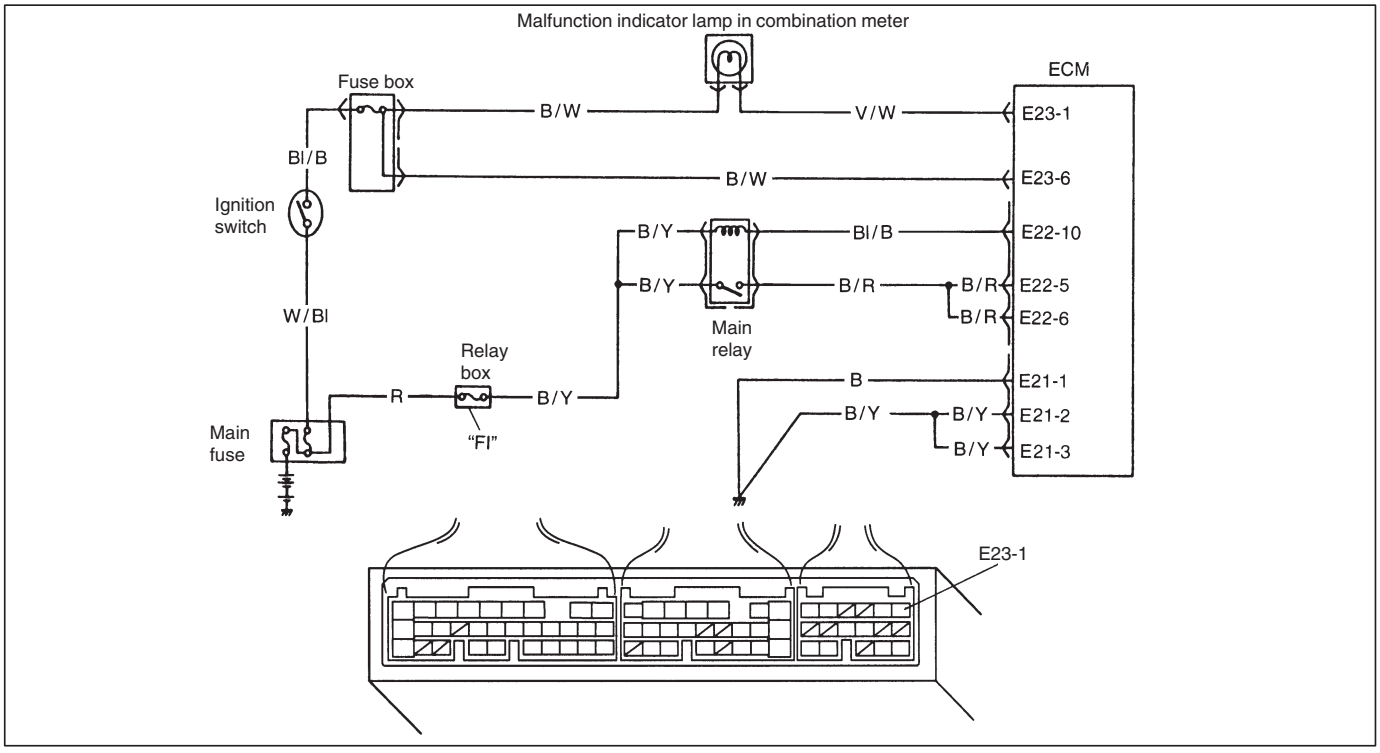

When the ignition switch is turned ON, ECM causes the main relay to turn ON (close the contact point). Then, ECM being supplied with the main power, turns ON the malfunction indicator lamp (MIL). When the engine starts to run and no malfunction is detected in the system, MIL goes OFF but if a malfunction was or is detected, MIL remains ON even when the engine is running.

INSPECTION

STEP	ACTION	YES	NO
1	MIL Power Supply Check 1) Turn ignition switch ON. Do other indicator/warning lights in combination meter comes ON?	Go to Step 2.	"IG" fuse blown, main fuse blown, ignition switch malfunction, "B/W" circuit between "IG" fuse and combination meter or poor coupler connection at combination meter.
2	ECM Power and Ground Circuit Check Does engine start?	Go to Step 3.	Go to TABLE A-3 ECM POWER AND GROUND CIRCUIT CHECK. If engine is not cranked, go to DIAGNOSIS in SECTION 6G.
3	MIL Circuit Check 1) Turn ignition switch OFF and disconnect connectors from ECM. 2) Check for proper connection to ECM at terminal E23-1. 3) If OK, then using service wire, ground terminal E23-1 in connector disconnected. Does MIL turn on at ignition switch ON?	Substitute a known-good ECM and recheck.	Bulb burned out or "V/W" wire circuit open.

TABLE A-2 MALFUNCTION INDICATOR LAMP CIRCUIT CHECK – LAMP REMAINS "ON" AFTER ENGINE STARTS

WIRING DIAGRAM/CIRCUIT DESCRIPTION – Refer to table A-1.

INSPECTION

STEP	ACTION	YES	NO
1	Diagnostic Trouble Code (DTC) check 1) Check DTC referring to DTC CHECK section. Is there any DTC(s)?	Go to Step 2 of ENGINE DIAG. FLOW TABLE.	Go to Step 2.
2	DTC check Start engine and recheck DTC while engine running. Is there any DTC(s)?		Go to Step 3.
3	MIL Circuit check 1) Turn OFF ignition switch. 2) Disconnect connectors from ECM. Does MIL turn ON at ignition switch ON?	"V/W" wire circuit shorted to ground.	Substitute a known-good ECM and recheck.

TABLE A-3 ECM POWER AND GROUND CIRCUIT CHECK – MIL DOESN'T LIGHT AT IGNITION SWITCH ON AND ENGINE DOESN'T START THOUGH IT IS CRANKED UP

CIRCUIT DESCRIPTION

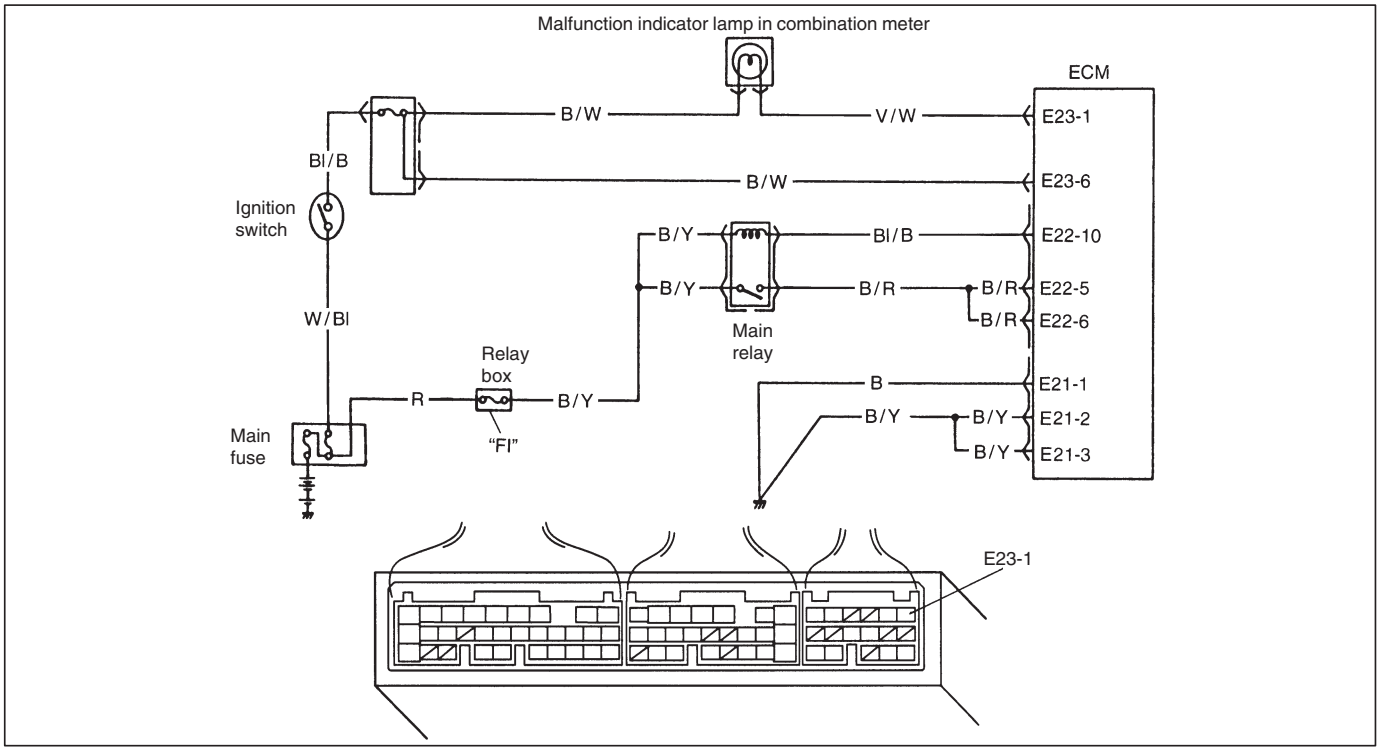

When the ignition switch tuned ON, the main relay turns ON (the contact point closes) and the main power is supplied to ECM.

INSPECTION

STEP	ACTION	YES	NO
1	Main Relay Operating Sound Check Is operating sound of main relay heard at ignition switch ON?	Go to Step 5.	Go to Step 2.
2	Main Relay Check 1) Turn OFF ignition switch and remove main relay (1). 2) Check for proper connection to main relay (1) at terminal 3 and 4. 3) Check resistance between each two terminals. See Fig. 1 and 2. Between terminals 1 and 2: Infinity Between terminals 3 and 4: 70 – 110 Ω 4) Check that there is continuity between terminals 1 and 2 when battery is connected to terminals 3 and 4. See Fig. 3. Is main relay in good condition?	Go to Step 3.	Replace main relay.
3	Fuse Check Is main "FI" fuse in good condition? See Fig. 4.	Go to Step 4.	Check for short in circuits connected to this fuse.
4	ECM Power Circuit Check 1) Turn OFF ignition switch, disconnect connectors from ECM and install main relay. 2) Check for proper connection to ECM at terminals E23-6, E22-10, E22-5 and E22-6. 3) If OK, then measure voltage between terminal E23-6 and ground, E22-10 and ground with ignition switch ON. Is each voltage 10 – 14 V?	Go to Step 5.	"B/W", "B/Y" or "Bl/B" circuit open.

STEP	ACTION	YES	NO
5	ECM Power Circuit Check 1) Using service wire, ground terminal E22-10 and measure voltage between terminal E22-5 and ground at ignition switch ON. Is it 10 – 14 V?	Check ground circuits “Bl/B” and “B/Y” for open. If OK, then substitute a known-good ECM and recheck.	Go to Step 6.
6	Is operating sound of main relay heard in Step 1?	Go to Step 7.	“B/Y” or “B/R” wire open.
7	Main Relay Check 1) Check main relay according to procedure in Step 2. Is main relay in good condition?	“B/Y” or “B/R” wire open.	Replace main relay.

Fig. 1 for Step 2

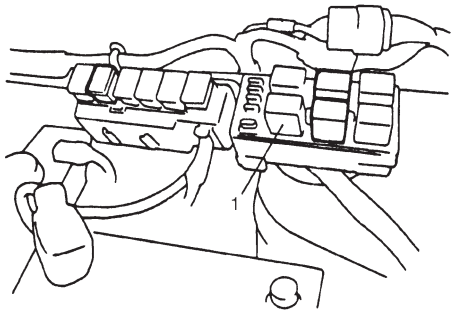

Fig. 2 for Step 2

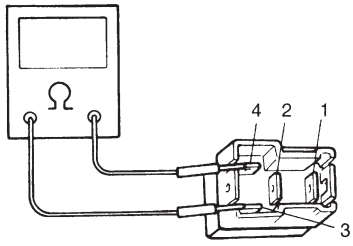

Fig. 3 for Step 2

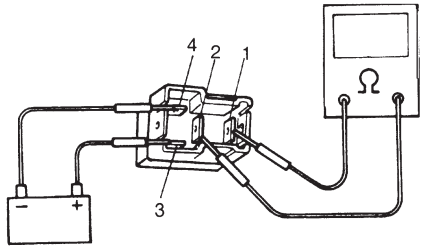

Fig. 4 for Step 3

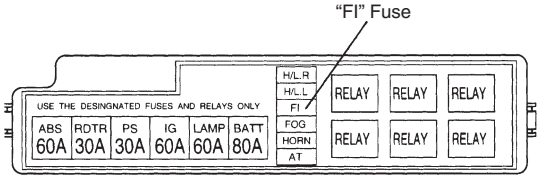

DTC P0105 MANIFOLD ABSOLUTE PRESSURE (MAP) CIRCUIT (DTC No.11) MALFUNCTION

CIRCUIT DESCRIPTION

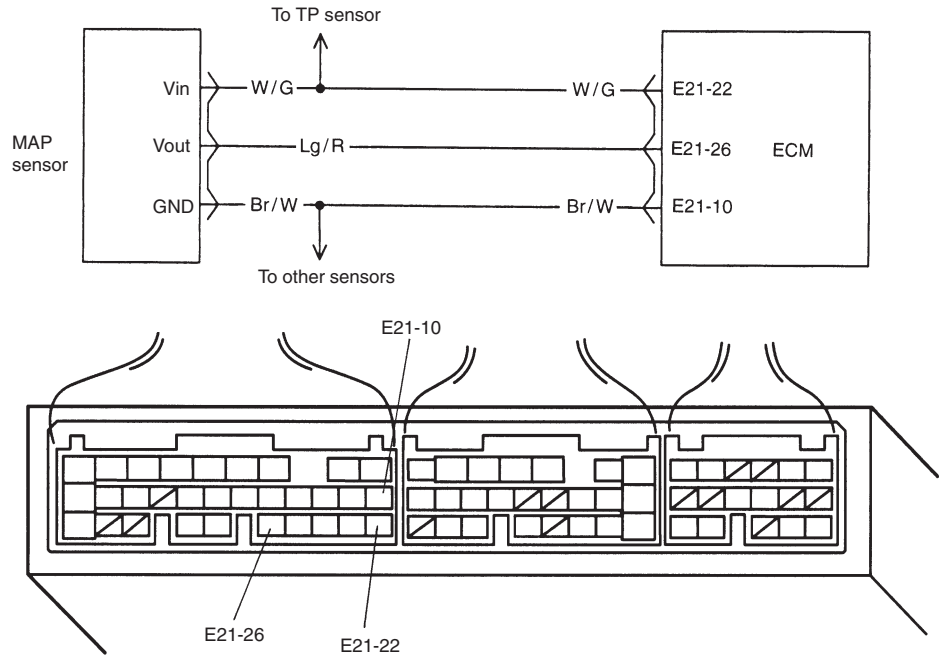

DTC DETECTING CONDITION	POSSIBLE CAUSE
● MAP: 4.9 kpa, 37 mmHg or less (Low pressure – High vacuums – Low voltage) ● MAP: 114.7 kpa, 860mmHg or more (High pressure – Low vacuums – High voltage)	● “Br/W” circuit open ● “W/G” circuit open or shorted to ground ● “Lg/R” circuit open or shorted to ground ● MAP sensor malfunction ● ECM malfunction

NOTE:
When DTC P0120 is indicated together, it is possible that “W/G” circuit is open.

DTC CONFIRMATION PROCEDURE

1) Clear DTC, start engine and keep it at idle for 1 min.
2) Select “DTC” mode on scan tool and check DTC.

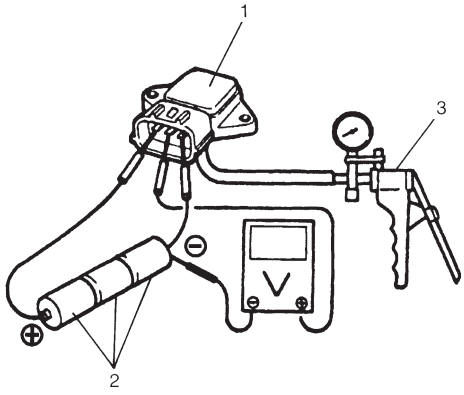

MAP Sensor Individual Check

1) Disconnect coupler from MAP sensor (1).
2) Remove MAP sensor (1).
3) Arrange 3 new 1.5 V batteries (2) in series (check that total voltage is 4.5 – 5.0 V) and connect its positive terminal to “Vin” terminal of sensor and negative terminal to “Ground” terminal. Then check voltage between “Vout” and “Ground”.
   Also, check if voltage reduces when vacuum is applied up to 400 mmHg by using vacuum pump (3).

   Output voltage (Vin voltage 4.5 – 5.5 V, ambient temp. 20 – 30°C, 68 – 86°F)

ALTITUDE (Reference)		BAROMETRIC PRESSURE		OUTPUT VOLTAGE
(ft)	(m)	(mmHg)	(kPa)	(V)
0 | 2 000	0 | 610	760 | 707	100 | 94	3.3 – 4.3
2 001 | 5 000	611 | 1 524	Under 707 over 634	94 | 85	3.0 – 4.1
5 001 | 8 000	1 525 | 2 438	Under 634 over 567	85 | 76	2.7 – 3.7
8 001 | 10 000	2 439 | 3 048	Under 567 over 526	76 | 70	2.5 – 3.3

   If check result is not satisfactory, replace MAP sensor (1).

4) Install MAP sensor (1) securely.
5) Connect MAP sensor (1) coupler securely.

INSPECTION

STEP	ACTION	YES	NO
1	Was “ENGINE DIAG. FLOW TABLE” performed?	Go to Step 2.	Go to “ENGINE DIAG. FLOW TABLE”.
2	Check MAP Sensor and Its Circuit. 1) Connect scan tool to DLC with ignition switch OFF. 2) Turn ignition switch ON. 3) Check intake manifold pressure. See Fig. 1. Is it 114.7 kPa or more or 43 kPa or less?	Go to Step 3.	Intermittent trouble. Check for intermittent referring to “INTERMITTENT AND POOR CONNECTION” in Section 0A.
3	Check Wire Harness. 1) Disconnect MAP sensor connector with ignition switch OFF. 2) Check for proper connection of MAP sensor at “Lg/R” and “Br/W” wire terminals. 3) If OK, then with ignition switch ON, check voltage at each of “W/G” and “Lg/R” wire terminals. See Fig. 2. Is voltage about 4 – 6 V at each terminal?	Go to Step 4.	“W/G” wire open or shorted to ground circuit or shorted to power circuit, “Lg/R” wire open or shorted to ground, poor E21-26 connection or E21-22 connection. If wire and connection are OK, confirm that MAP sensor is normal and then substitute a known-good ECM and recheck. **NOTE: When battery voltage is applied to “W/G” wire, it is possible that MAP sensor is also faulty.**
4	Check MAP sensor according to “MAP Sensor Individual Check”. Is it in good condition?	“W/G” wire shorted to “Lg/R” wire, “Br/W” wire open, poor E21-10 connection. If wire and connection are OK, substitute a known-good ECM and recheck.	Replace MAP sensor.

Fig. 1 for Step 2

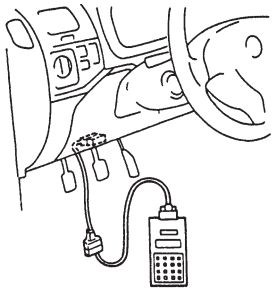

Fig. 2 for Step 3

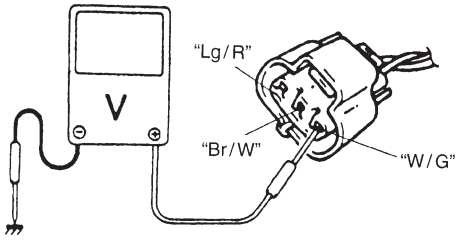

DTC P0110 (DTC No.18) INTAKE AIR TEMP. (IAT) CIRCUIT MALFUNCTION

CIRCUIT DESCRIPTION

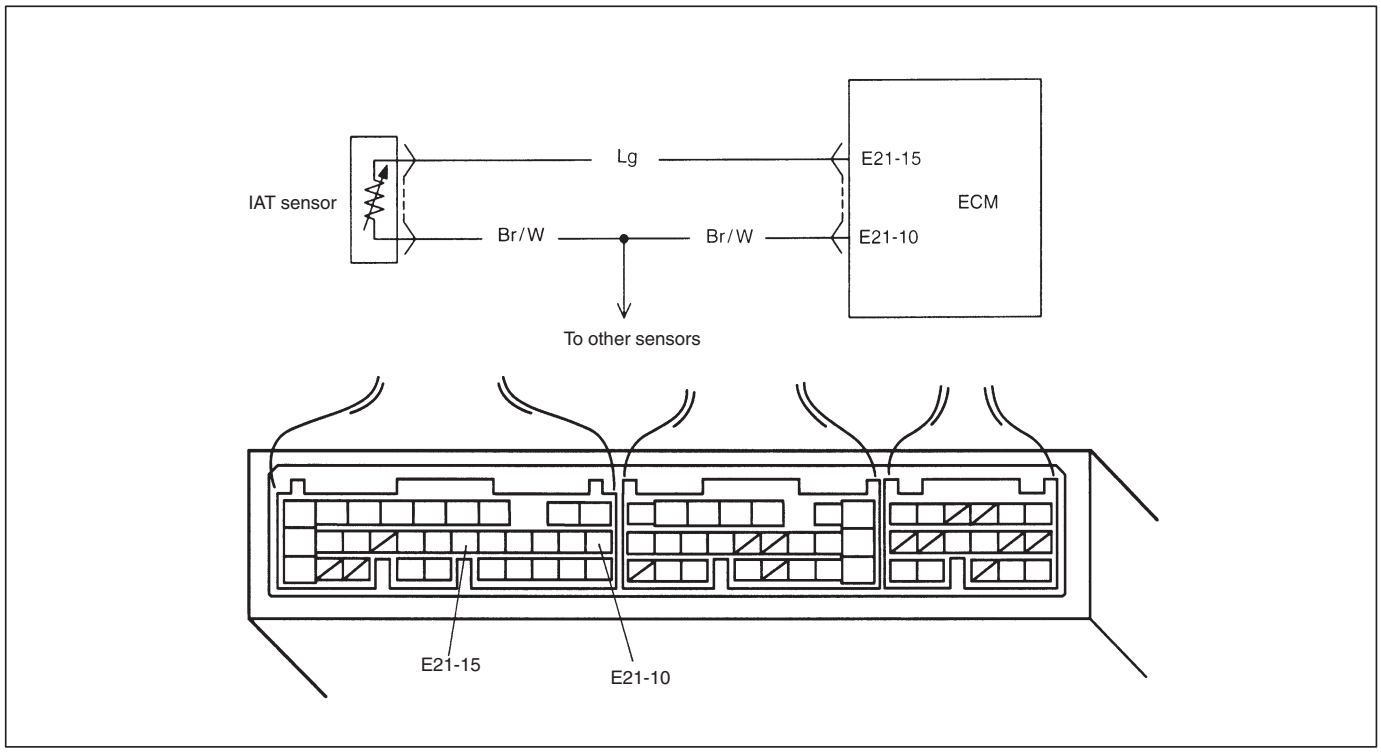

DTC DETECTING CONDITION	POSSIBLE CAUSE
● Low intake air temperature (High voltage-High resistance) ● High intake air temperature (Low voltage-Low resistance)	● "Lg" circuit open or shorted to power. ● "Br/W" circuit open ● IAT sensor malfunction ● ECM malfunction

NOTE:

- **When DTC P0115 and P0120 are indicated together, it is possible that "Br/W" circuit is open.**
- **Before inspecting, be sure to check that ambient temperature is higher than –40°C (–40°F).**

DTC CONFIRMATION PROCEDURE

1) Clear DTC, start engine and keep it at idle for 1 min.
2) Select "DTC" mode no scan tool and check DTC.

INSPECTION

STEP	ACTION	YES	NO
1	Was “ENGINE DIAG. FLOW TABLE” performed?	Go to Step 2.	Go to “ENGINE DIAG. FLOW TABLE”.
2	Check IAT Sensor and Its Circuit. 1) Connect scan tool to DLC with ignition switch OFF. 2) Turn ignition switch ON. 3) Check intake air temp. displayed on scan tool. See Fig. 1. Is –40°C (–40°F) or 119°C (246°F) indicated?	Go to Step 3.	Intermittent trouble. Check for intermittent referring to “Intermittent and Poor Connection” in Section 0A.
3	Check Wire Harness. 1) Disconnect IAT sensor connector with ignition switch OFF. 2) Check for proper connection to IAT sensor at “Lg” and “Br/W” wire terminals. 3) If OK, then with ignition switch ON, is voltage applied to “Lg” wire terminal about 4 – 6 V? See Fig. 2.	Go to Step 4.	“Lg” wire open or shorted to power, or poor E21-15 connection. If wire and connection are OK, substitute a known-good ECM and recheck.
4	Does scan tool indicate –40°C (–40°F) at Step 2.	Go to Step 6.	Go to Step 5.
5	Check Wire Harness 1) Check intake air temp. displayed on scan tool with ignition switch ON. Is –40°C (–40°F) indicated?	Replace IAT sensor.	“Lg” wire shorted to ground. If wire is OK, substitute a known-good ECM and recheck.
6	Check Wire Harness. 1) Using service wire, connect IAT sensor connector terminals. 2) Check intake air temp. displayed on scan tool with ignition switch ON. See Fig. 3. Is 119°C (246°F) indicated?	Replace IAT sensor.	“Lg” wire open or poor E21-10 connection. If wire and connection are OK, substitute a known-good ECM and recheck.

Fig. 1 for Step 2

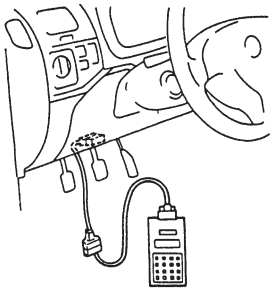

Fig. 2 for Step 3

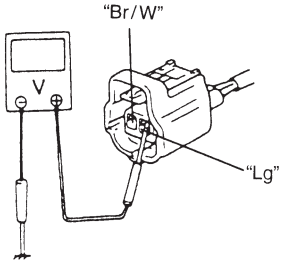

Fig. 3 for Step 6

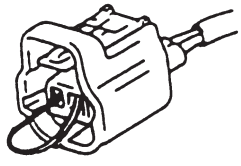

DTC P0115 ENGINE COOLANT TEMPERATURE (ECT) CIRCUIT (DTC No.19) MALFUNCTION

CIRCUIT DESCRIPTION

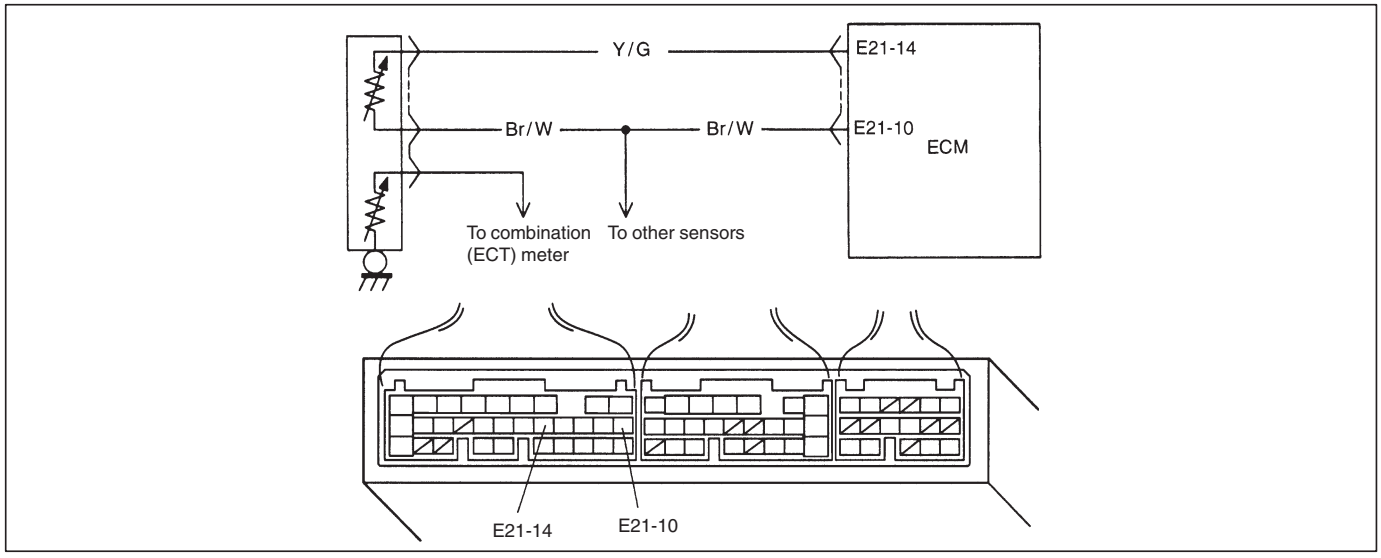

DTC DETECTING CONDITION	POSSIBLE CAUSE
● Low engine coolant temperature (High voltage-High resistance) ● High engine coolant temperature (Low voltage-Low resistance)	● "Y/G" circuit open or shorted to power ● "Br/W" circuit open ● ECT sensor malfunction ● ECM malfunction

DTC CONFIRMATION PROCEDURE

1) Clear DTC, start engine and keep it at idle for 1 min.
2) Select "DTC" mode on scan tool and check DTC.

NOTE:
- **Before inspecting, be sure to check that coolant temp. meter in combination meter indicates normal operating temperature (Engine is not overheating).**
- **When this DTC and P1709 are stored together, also clear DTC stored in TCM after completion of repair.**

INSPECTION

STEP	ACTION	YES	NO
1	Was “ENGINE DIAG. FLOW TABLE” performed?	Go to Step 2.	Go to “ENGINE DIAG. FLOW TABLE”.
2	Check ECT Sensor and Its Circuit. 1) Connect scan tool with ignition switch OFF. 2) Turn ignition switch ON. 3) Check engine coolant temp. displayed on scan tool. See Fig. 1. Is –40°C (–40°F) or 119°C (246°F) indicated?	Go to Step 3.	Intermittent trouble. Check for intermittent referring to “Intermittent and Poor Connection” in Section 0 A.
3	Check Wire Harness. 1) Disconnect ECT sensor connector with ignition switch OFF. 2) Check for proper connection to ECT sensor at “Br/W” and “Y/G” wire terminals. 3) If OK, then with ignition switch ON, is voltage applied to “Y/G” wire terminal about 4 – 6 V? See Fig. 2.	Go to Step 4.	“Y/G” wire open or shorted to power, or poor E21-14 connection. If wire and connection are OK, substitute a known-good ECM and recheck.
4	Does scan tool indicate –40°C (–40°F) at Step 2.	Go to Step 6.	Go to Step 5.
5	Check Wire Harness. 1) Check engine coolant temp. displayed on scan tool with ignition switch ON. Is –40°C (–40°F) indicated?	Replace ECT sensor.	“Y/G” wire shorted to ground. If wire is OK, substitute a known-good ECM and recheck.
6	Check Wire Harness. 1) Using service wire, connect ECT sensor connector terminals. See Fig. 3. 2) Turn ignition switch ON and check engine coolant temp. displayed on scan tool. Is 119°C (246°F) indicated?	Replace ECT sensor.	“Br/W” wire open or poor E21-10 connection. If wire and connection are OK, substitute a known-good ECM and recheck.

Fig. 1 for Step 2

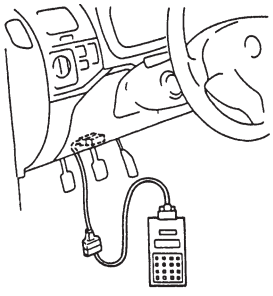

Fig. 2 for Step 3

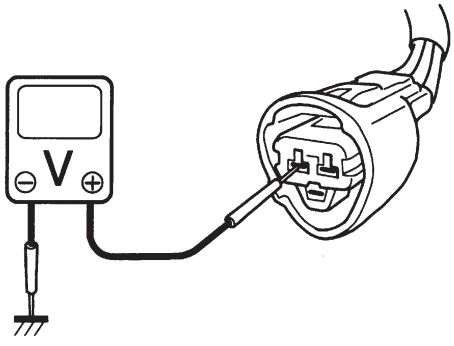

Fig. 3 for Step 6

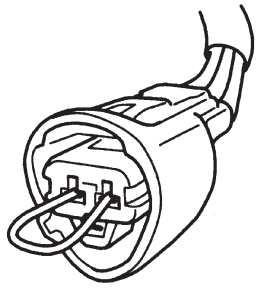

DTC P0120 (DTC No.13) THROTTLE POSITION CIRCUIT MALFUNCTION

CIRCUIT DESCRIPTION

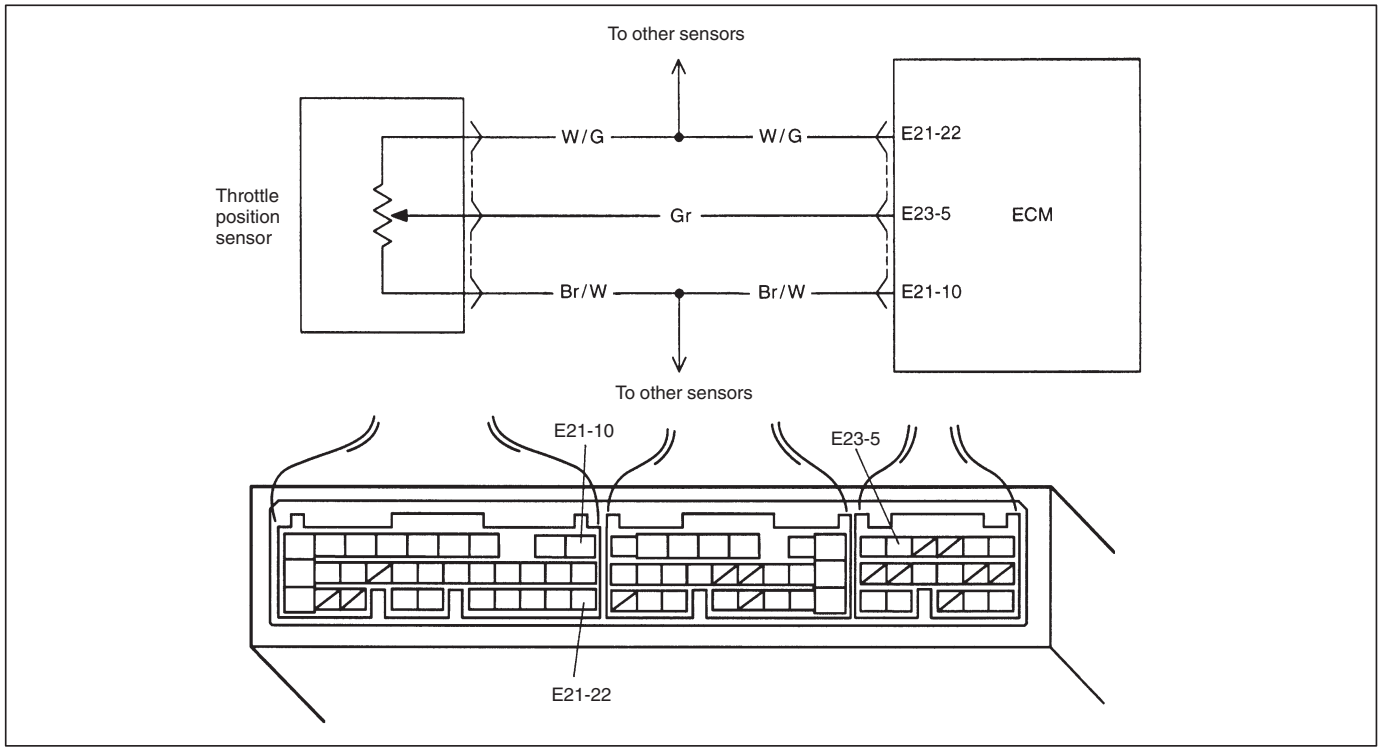

DTC DETECTING CONDITION	POSSIBLE CAUSE
● Signal voltage high ● Signal voltage low	● “Br/W” circuit open ● “Gr” circuit open or shorted to ground ● “W/G” circuit open or shorted to power or ground ● TP sensor malfunction ● ECM malfunction

NOTE:
When DTC P0105, P0110, P0115 and/or P0120 are indicated together, it is possible that “Br/W” or “W/G” circuit is open.

DTC CONFIRMATION PROCEDURE

1) Clear DTC, start engine and keep it at idle for 1 min.
2) Select “DTC” mode on scan tool and check DTC.

NOTE:
When this DTC and P1700 are stored together, also clear DTC stored in TCM after completion of repair.

INSPECTION

STEP	ACTION	YES	NO
1	Was “ENGINE DIAG. FLOW TABLE” performed?	Go to Step 2.	Go to “ENGINE DIAG. FLOW TABLE”.
2	Check TP Sensor and Its Circuit. 1) Connect scan tool to DLC with ignition switch OFF and then turn ignition switch ON. 2) Check throttle valve opening percentage displayed on scan tool. See Fig. 1. Is it displayed 2% or less? 3) Check throttle valve opening percentage displayed on scan tool while opening throttle valve from idle position to full open position. See Fig. 1. Is it displayed 96% or higher?	Go to Step 3.	Intermittent trouble. Check for intermittent referring to “Intermittent and Poor Connection” in Section 0 A.
3	Check Wire Harness. 1) Disconnect connector from TP sensor with ignition switch OFF. 2) Check for proper connection to TP sensor at “W/G”, “Gr” and “Br/W” wire terminal. 3) If OK, then with ignition switch ON, check voltage at each of “W/G” and “Gr” wire terminals. See Fig. 2. Is voltage about 4 – 6 V at each terminal?	Go to Step 4.	“W/G” wire open, “W/G” wire shorted to ground circuit or power circuit or “Br/W” wire, “Gr” wire open or shorted to ground circuit or poor E21-22 or E23-5 connection. If wire and connection are OK, substitute a known-good ECM and recheck.
4	Check TP Sensor. 1) Check resistance between terminals of TP sensor. See Fig. 3. Between 1 and 2: 2.5 – 6.0 kΩ Between 1 and 3: 100 Ω – 20 kΩ Are measured values within specifications?	“Br/W” wire open or poor E21-10 connection. If wire and connection are OK, substitute a known-good ECM and recheck.	Replace TP sensor.

Fig. 1 for Step 2

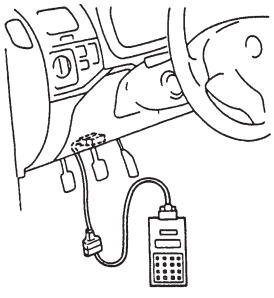

Fig. 2 for Step 3

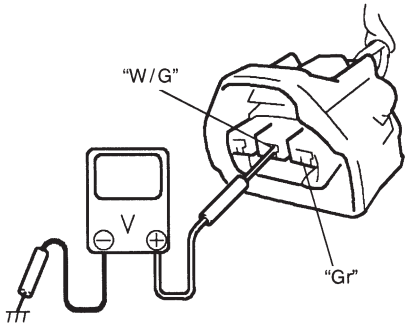

Fig. 3 for Step 4

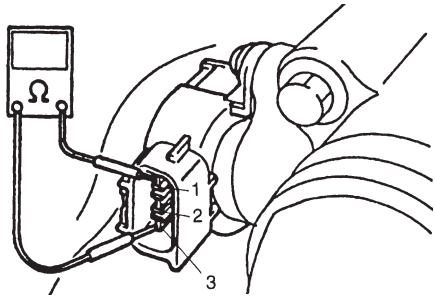

MEMO

DTC P0121 THROTTLE POSITION CIRCUIT RANGE/PERFORMANCE PROBLEM

CIRCUIT DESCRIPTION

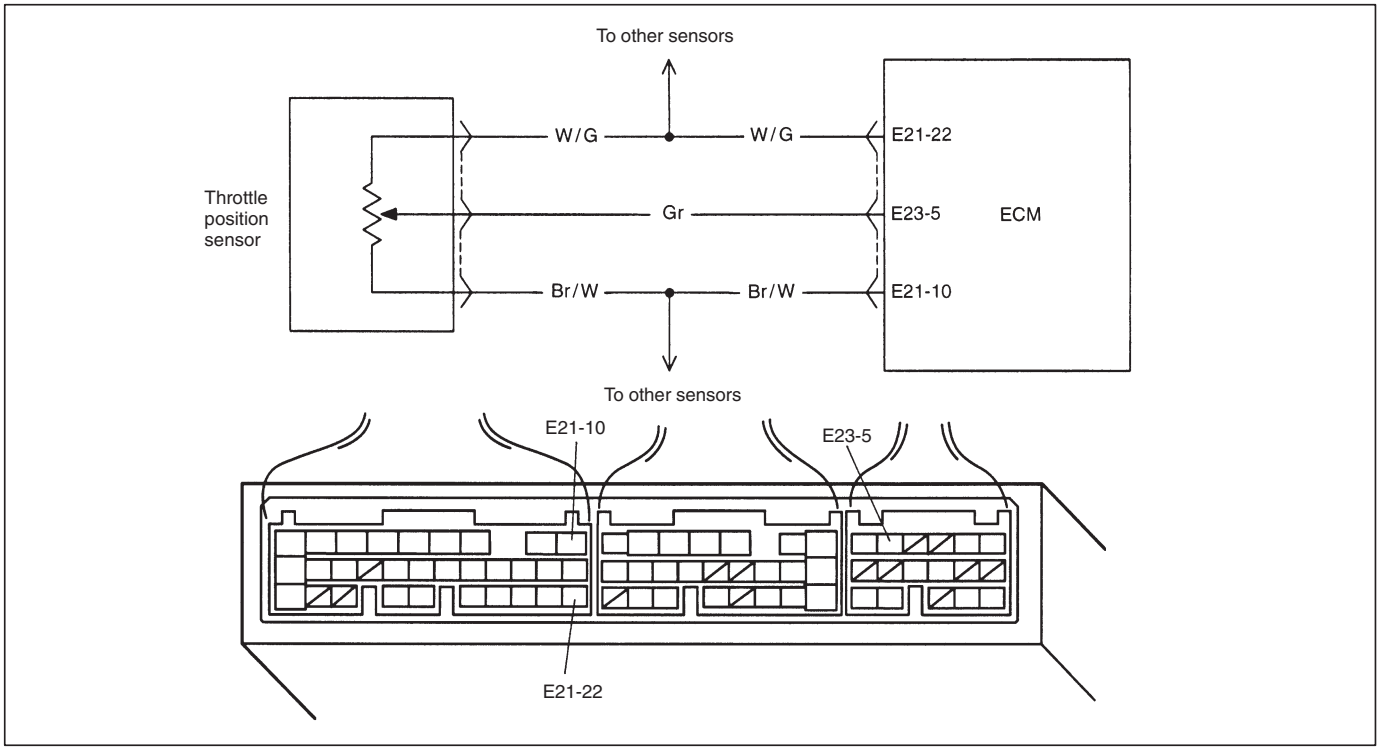

DTC DETECTING CONDITION	POSSIBLE CAUSE
● After engine warmed up. ● While vehicle running at specified engine speed. ● No change in intake manifold pressure (constant throttle opening) ● Difference between actual throttle opening (detected from TP sensor) and opening calculated by ECM (Obtained on the basis of engine speed and intake manifold pressure) in larger than specified value. ⁎ 2 driving cycle detection logic, continuous monitoring	● TP sensor malfunction ● High resistance in the circuit ● ECM malfunction

DTC CONFIRMATION PROCEDURE

WARNING:
- **When performing a road test, select a place where there is no traffic or possibility of a traffic accident and be very careful during testing to avoid occurrence of an accident.**
- **Road test should be carried out with 2 persons, a driver and a tester, on a level road.**

1) Turn ignition switch OFF. Clear DTC with ignition switch ON, check vehicle and environmental condition for:
   – Indication of fuel level meter in combination meter: 1/4 or more
   – Altitude (barometric pressure): 2400 m, 8000 ft or less (560 mmHg, 75 kPa or more)
   – Ambient temp.: –10°C, 14°F or higher
   – Intake air temp.: 70°C, 158°F or lower
   – Engine coolant temp.: 70 – 110°C, 158 – 230°F
2) Warm up engine to normal operating temperature.
3) Increase vehicle speed to 30 – 40 mph, 50 – 60 km/h in 3rd gear or “D” range and hold throttle valve at that opening position for 1 min.
4) Stop vehicle.
5) Check DTC in “DTC” mode and pending DTC in “ON BOARD TEST” or “PENDING DTC” mode.

INSPECTION

STEP	ACTION	YES	NO
1	Was “ENGINE DIAG. FLOW TABLE” performed?	Go to Step 2.	Go to “ENGINE DIAG. FLOW TABLE”.
2	Check TP Sensor and Its Circuit. When using SUZUKI scan tool: 1) Turn ignition switch OFF and connect SUZUKI scan tool to DLC. 2) Turn ignition switch ON and check TP sensor output voltage when throttle valve is at idle position and fully opened. See Fig. 1 and 3. When not using SUZUKI scan tool: 1) Turn ignition switch ON. 2) Check voltage at terminal E23-5 of ECM connector connected, when throttle valve is at idle position and fully opened. See Fig. 2 and 3. Dose voltage vary within specified value linearly as shown in figure?	If voltmeter was used, check terminal E23-5 for poor connection. If OK, substitute a known-good ECM and recheck.	Go to Step 3.
3	Check TP Sensor. 1) Turn ignition switch OFF. 2) Disconnect TP sensor connector. 3) Check for proper connection to TP sensor at each terminal. 4) If OK, then measure resistance between terminals and check if each measured value is as specified below. See Fig. 4. Between 1 and 2: 2.5 – 6.0 kΩ Between 1 and 3: 100 Ω – 20 kΩ, varying according to throttle valve opening. Are measured values as specified?	High resistance in “W/G”, “Gr” or “Br/W” circuit. If wire and connection are OK, substitute a known-good ECM and recheck.	Replace TP sensor.

Fig. 1 for Step 2

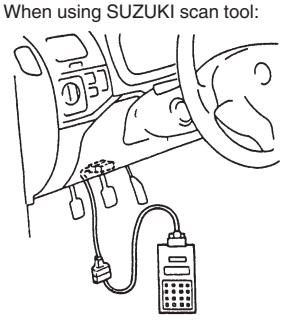

Fig. 2 for Step 2

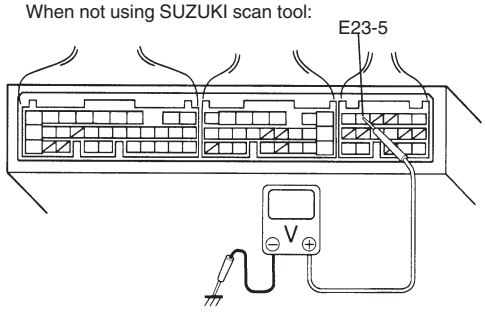

Fig. 3 for Step 2

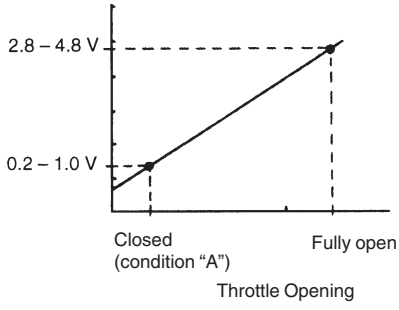

Fig. 4 for Step 3

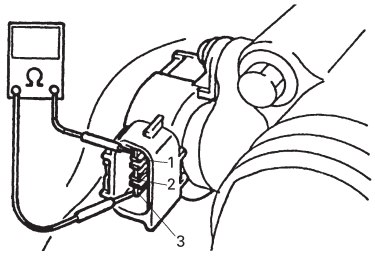

DTC P0130 HEATED OXYGEN SENSOR (HO2S) CIRCUIT (DTC No.14) MALFUNCTION (SENSOR-1)

CIRCUIT DESCRIPTION

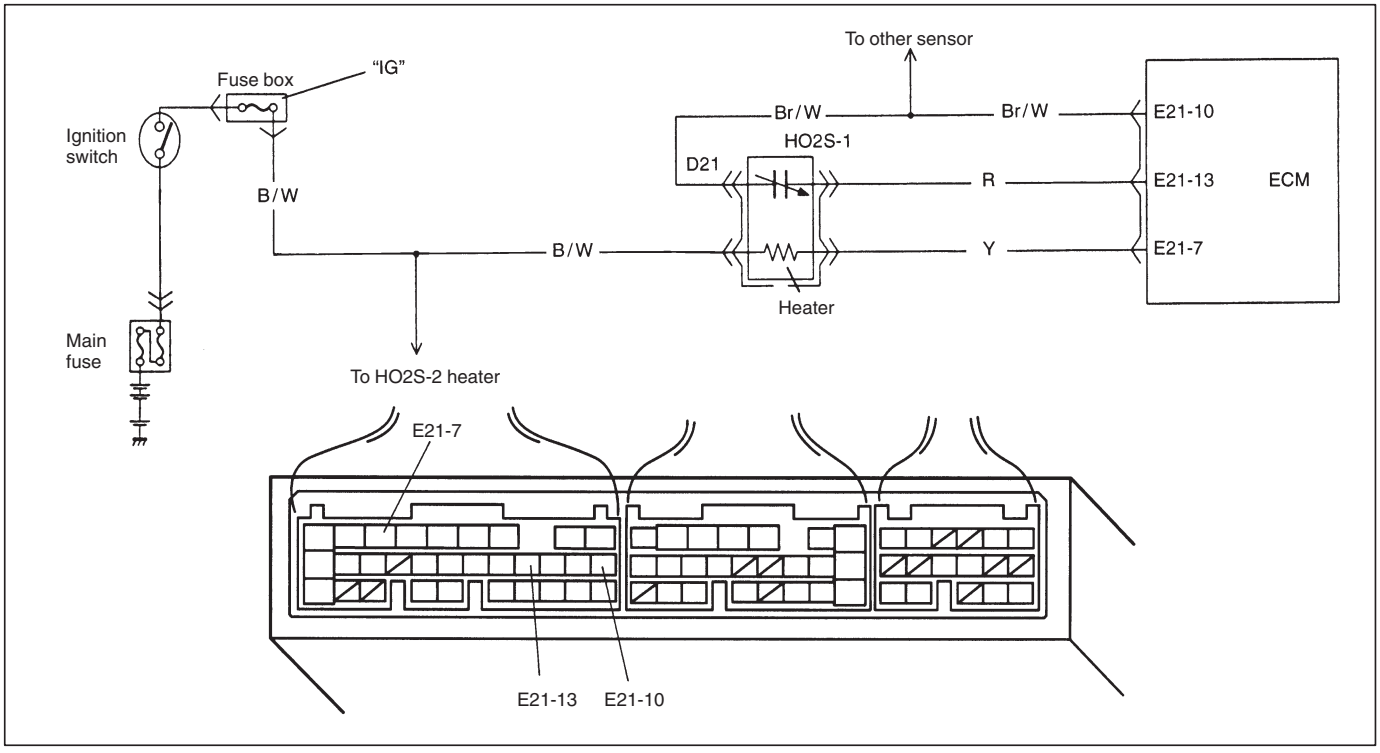

DTC DETECTING CONDITION	POSSIBLE CAUSE
● When running at idle speed after engine warmed up and running at specified vehicle speed, HO2S-1 output voltage does not go below 0.3 V or over 0.6 V. ⁎ 2 driving cycle detection logic, Monitoring once/1 driving.	● Heated oxygen sensor-1 malfunction ● "Br/W" or "R" circuit open (poor connection) or short

DTC CONFIRMATION PROCEDURE

WARNING:
- **When performing a road test, select a place where there is no traffic or possibility of a traffic accident and be very careful during testing to avoid occurrence of an accident.**
- **Road test should be carried out with 2 persons, a driver and a tester.**

1) Turn ignition switch OFF. Clear DTC with ignition switch ON, check vehicle and environmental condition for:
   – Indication of fuel level meter in combination meter: 1/4 or more
   – Altitude (barometric pressure): 2400 m, 8000 ft or less (560 mmHg, 75 kPa or more)
   – Ambient temp.: –10°C, 14°F or higher
   – Intake air temp.: 70°C, 158°F or lower
2) Warm up engine to normal operating temperature.
3) Drive vehicle at 30 – 40 mph, 50 – 60 km/h for 2 min.
4) Stop vehicle and run engine at idle for 2 min.
5) Check DTC in "DTC" mode and pending DTC in "ON BOARD TEST" or "PENDING DTC" mode.

INSPECTION

STEP	ACTION	YES	NO
1	Was “ENGINE DIAG. FLOW TABLE” performed?	Go to Step 2.	Go to “ENGINE DIAG. FLOW TABLE”.
2	Is there DTC(s) other than HO2S-1 (DTC P0130)?	Go to applicable DTC Diag. Flow Table.	Go to Step 3.
3	1) Connect scan tool to DLC with ignition switch OFF. 2) Warm up engine to normal operating temperature and keep it at 2000 r/min. for 60 sec. 3) Repeat racing engine (Repeat depressing accelerator pedal 5 to 6 times continuously and take foot off from pedal to enrich and enlean A/F mixture). See Fig. 1 and 2. Does HO2S-1 output voltage deflect between 0.3 V and over 0.6 V repeatedly?	Intermittent trouble. Check for intermittent referring to “Intermittent and Poor Connection” in Section 0A.	Check “R” and “Br/W” wires for open and short, and connections for poor connection. If wires and connections are OK, replace HO2S-1.

Fig. 1 for Step 3

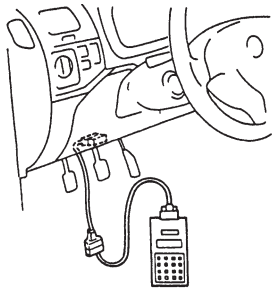

Fig. 2 for Step 3

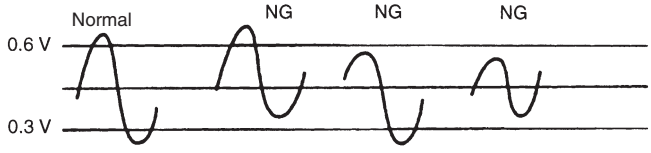

DTC P0133 HEATED OXYGEN SENSOR (HO2S) CIRCUIT SLOW RESPONSE (SENSOR-1)

WIRING DIAGRAM/CIRCUIT DESCRIPTION – Refer to DTC P0130 section.

DTC DETECTING CONDITION	POSSIBLE CAUSE
● When running at specified idle speed after engine warmed up and running at specified vehicle speed, response time (time to change from lean to rich or from rich to lean) of HO2S-1 output voltage is about 1 sec. at minimum or average time of 1 cycle is 5 sec. at minimum. See. Fig. 1 ⁎ 2 driving cycle detection logic, Monitoring once/1 driving.	● Heated oxygen sensor-1 malfunction

Fig. 1

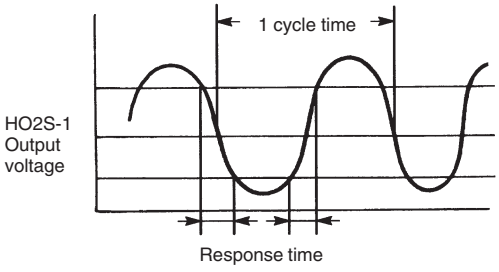

DTC CONFIRMATION PROCEDURE – Refer to DTC P0130 section.

INSPECTION

STEP	ACTION	YES	NO
1	Was “ENGINE DIAG. FLOW TABLE” performed?	Go to Step 2.	Go to “ENGINE DIAG. FLOW TABLE”.
2	Is there DTC(s) other than HO2S-1 (DTC P0133)?	Go to applicable DTC Diag. Flow Table.	Replace HO2S-1.

DTC P0135 HEATED OXYGEN SENSOR (HO2S) HEATER CIRCUIT (DTC No.14) MALFUNCTION (SENSOR-1)

CIRCUIT DESCRIPTION

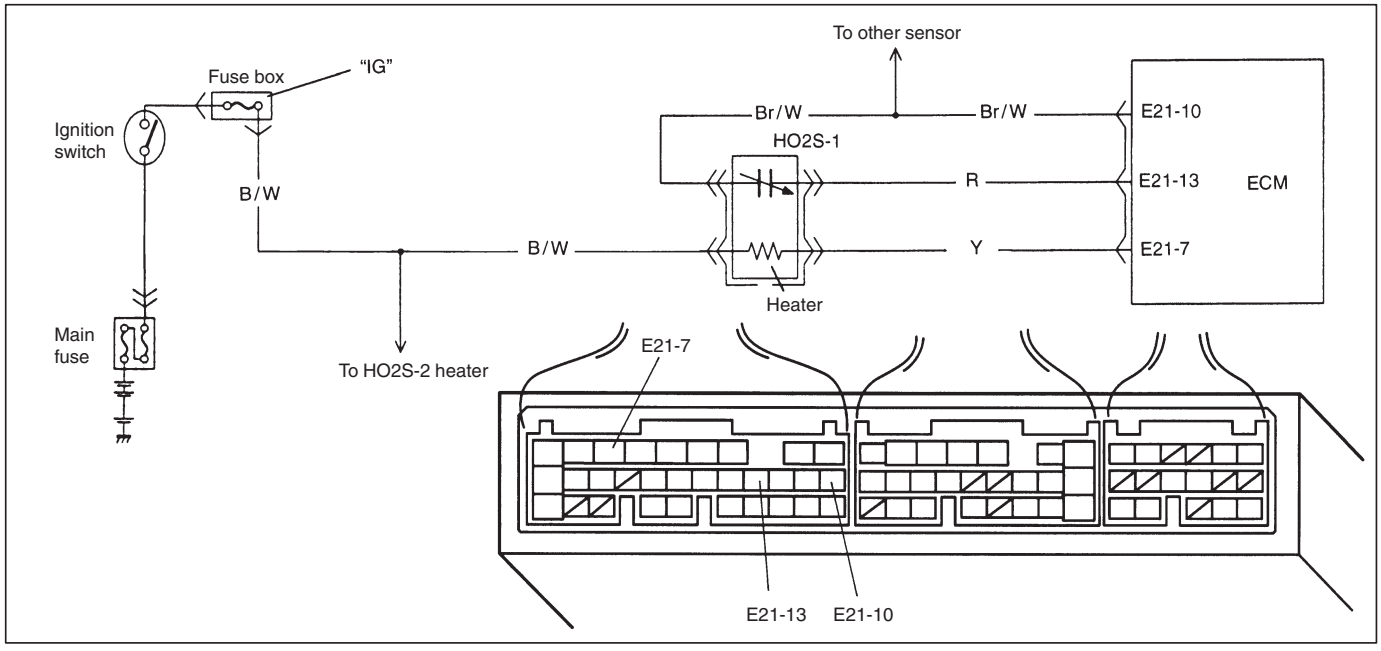

DTC DETECTING CONDITION	POSSIBLE CAUSE
DTC will set when A or B condition is met. A: ● Low voltage at terminal E21-7 when engine is running at high load. B: ● High voltage at terminal E21-7 when engine is running under condition other than above. ⁎ 2 driving cycle detection logic, Continuous monitoring.	● HO2S-1 heater circuit open or shorted to ground ● ECM malfunction

DTC CONFIRMATION PROCEDURE

WARNING:
- **When performing a road test, select a place where there is no traffic or possibility of a traffic accident and be very careful during testing to avoid occurrence of an accident.**
- **Road test should be carried out with 2 persons, a driver and a tester.**

1) Turn ignition switch OFF.
2) Clear DTC with ignition switch ON, start engine and keep it at idle for 1 min.
3) Start vehicle and depress accelerator pedal fully for 5 sec. or longer.
4) Stop vehicle.
5) Check DTC in "DTC" mode and pending DTC in "ON BOARD TEST" or "PENDING DTC" mode.

INSPECTION

STEP	ACTION	YES	NO
1	Was “ENGINE DIAG. FLOW TABLE” performed?	Go to Step 2.	Go t o“ENGINE DIAG. FLOW TABLE”.
2	Check Heater for Operation. 1) Check voltage at terminal E21-7. See Fig. 1. 2) Warm up engine to normal operating temperature. 3) Stop engine. 4) Turn ignition switch ON and Check voltage at terminal E21-7. See Fig. 1. Voltage should be over 10 V. 5) Start engine, run it at idle and check voltage at the same terminal. Voltage should be below 1.9 V. Are check results are specified?	Intermittent trouble Check for intermittent referring to “Intermittent and Poor Connection” in Section 0A.	Go to Step 3.
3	Check Heater of Sensor-1. 1) Disconnect HO2S-1 coupler with ignition switch OFF. 2) Check for proper connection to HO2S-1 at “B/W” and “Y” wire terminals. 3) If OK, then check heater resistance. See Fig. 2. Is it 11.7 – 15.6 Ω at 20°C, 68°F?	“Y” wire open or shorted to ground or poor connection at E21-7. If wire and connection are OK, substitute a known-good ECM and recheck.	Replace HO2S-1.

Fig. 1 for Step 2

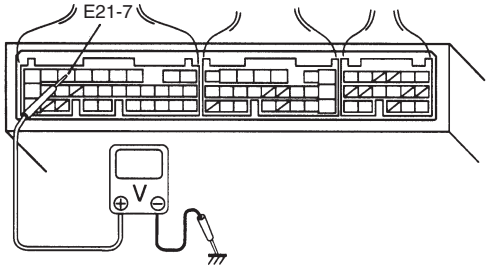

Fig. 2 for Step 3

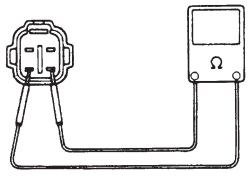

DTC P0136 HEATED OXYGEN SENSOR (HO2S) CIRCUIT MALFUNCTION (SENSOR-2)

CIRCUIT DESCRIPTION

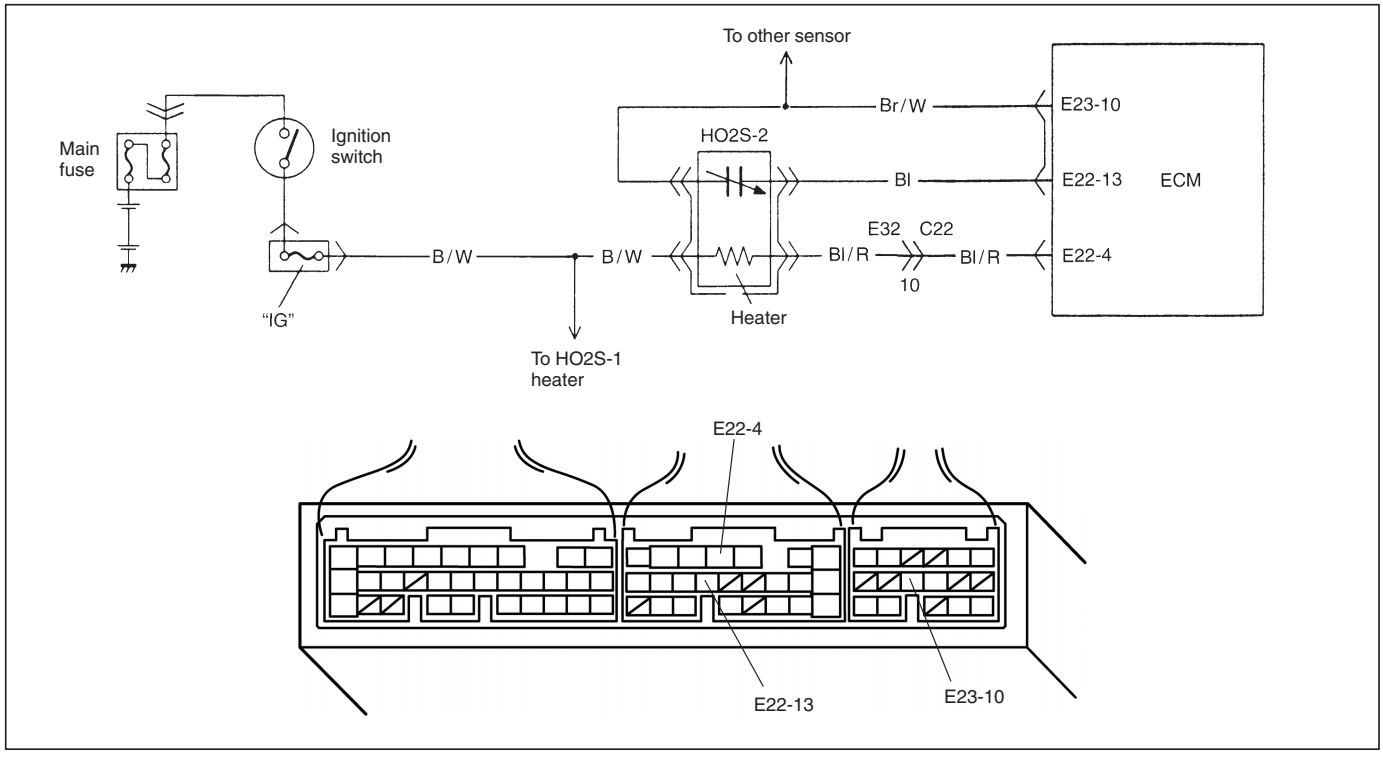

DTC DETECTING CONDITION	POSSIBLE CAUSE
DTC will set when A or B condition is detected. A. Max. output voltage of HO2S-2 is lower than specified value or Min. output voltage is higher than specified value while vehicle driving. B. Engine is warmed up and HO2S-2 voltage is 4.5 V or more. (circuit open) ⁎ 2 driving cycle detection logic, monitoring once/1 driving.	● Exhaust gas leakage ● "Br/W" or "Bl" circuit open or short ● Heated oxygen sensor-2 malfunction ● Fuel system malfunction

DTC CONFIRMATION PROCEDURE

WARNING:
- **When performing a road test, select a place where there is no traffic or possibility of a traffic accident and be very careful during testing to avoid occurrence of an accident.**
- **Road test should be carried out with 2 persons, a driver and a tester, on a level road.**

1) Turn ignition switch OFF.
   Clear DTC with ignition switch ON, check vehicle and environmental condition for:
   – Indication of fuel level meter in combination meter: 1/4 or more
   – Altitude (barometric pressure): 2400 m, 8000 ft or less (560 mmHg, 75 kPa or more)
   – Ambient temp.: –10°C, 14°F or higher
   – Intake air temp.: 70°C, 158°F or lower
   – No exhaust gas leakage and loose connection
2) Warm up engine to normal operating temperature.
3) Drive vehicle under usual driving condition for 5 min. and check HO2S-2 output voltage and “short term fuel trim” with “Data List” mode on scan tool, and write it down.
4) Stop vehicle (don’t turn ignition switch OFF).
5) Increase vehicle speed to higher than 20 mph, 32 km/h and then stop vehicle.
6) Repeat above steps 5) 4 times.
7) Increase vehicle speed to about 50 mph (80 km/h) in 3rd gear or 2 range.
8) Release accelerator pedal and with engine brake applied, keep vehicle coasting (fuel cut condition) for 10sec. or more.
9) Stop vehicle (don’t turn ignition switch OFF) and run engine at idle for 2 min.
   After this step 9), if “Oxygen Sensor Monitoring TEST COMPLETED” is displayed in “READINESS TESTS” mode and DTC is not displayed in “DTC” mode, confirmation test is completed.
   If “TEST NOT COMPLTD” is still being displayed, proceed to next step 10).
10) Drive vehicle under usual driving condition for 10 min. (or vehicle is at a stop and run engine at idle for 10 min. or longer)
11) Stop vehicle (don’t turn ignition switch OFF). Confirm test results according to “Test Result Confirmation Flow Table” in “DTC CONFIRMATION PROCEDURE” of DTC P0420.

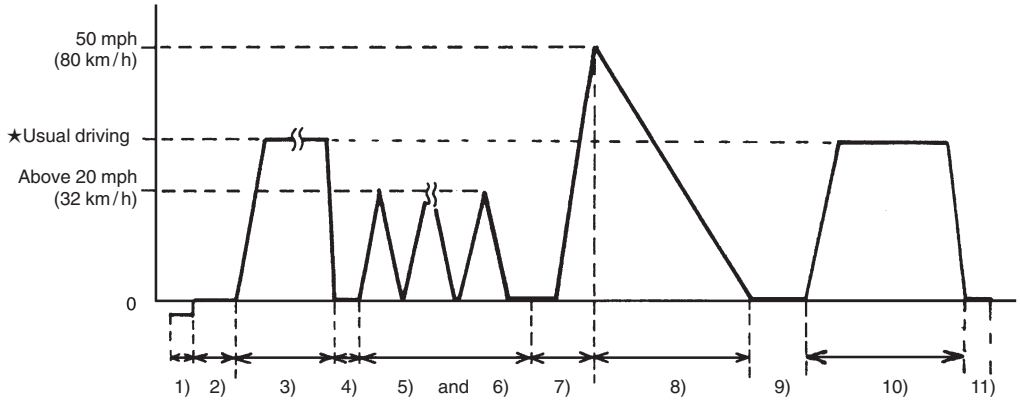

★Usual driving: Driving at 30 – 40 mph, 50 – 60 km/h including short stop according to traffic signal. (under driving condition other than high-load, high-engine speed, rapid accelerating and decelerating)

INSPECTION

STEP	ACTION	YES	NO
1	Was “ENGINE DIAG. FLOW TABLE” performed?	Go to Step 2.	Go to “ENGINE DIAG. FLOW TABLE”.
2	Check exhaust system for leakage, loose connection and damage. Is it good condition?	Go to Step 3.	Repair or replace.
3	Check HO2S-2 and Its Circuit. Was HO2S-2 output voltage indicated on scan tool in step 3) of DTC confirmation test less than 1.275 V?	Go to Step 4.	“Br/W” or “Bl” circuit open or HO2S-2 malfunction.
4	Check Short Term Fuel Trim. Did short term fuel trim very within –20 – +20% range in step 3) of DTC confirmation test?	Check “Bl” and “Br/W” wire for open and short, and connection for poor connection. If wire and connection are OK, replace HO2S-2.	Check fuel system. Go to DTC P0171/P0172 Diag. Flow Table.

DTC P0141 HEATED OXYGEN SENSOR (HO2S) HEATER CIRCUIT MALFUNCTION (SENSOR-2)

CIRCUIT DESCRIPTION

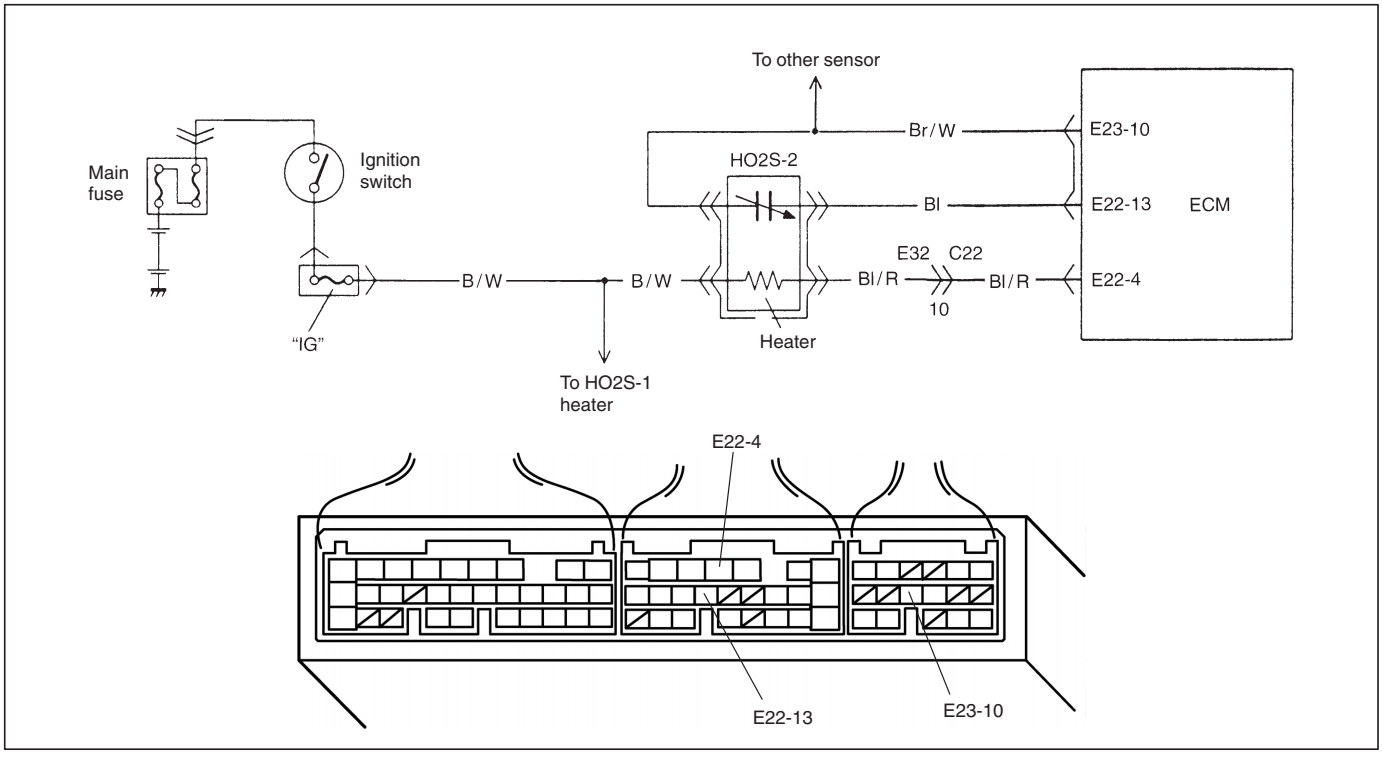

DTC DETECTING CONDITION	POSSIBLE CAUSE
DTC will set when A or B condition it met. A. Low voltage at terminal E22-4 for specified time after engine start or while engine running at high load. B. High voltage at terminal E22-4 while engine running under other than above condition. ⁎ 2 driving cycle detection logic, continuous monitoring.	● HO2S-2 heater circuit open or shorted to ground ● ECM malfunction

DTC CONFIRMATION PROCEDURE

1) Turn ignition switch OFF once and then ON.
2) Clear DTC, start engine and warm up engine to normal operating temperature.
3) Keep it at 2000 r/min for 2 min.
4) Check pending DTC in "ON BOARD TEST" or "PENDING DTC" mode and DTC in "DTC" mode.

INSPECTION

STEP	ACTION	YES	NO
1	Was “ENGINE DIAG. FLOW TABLE” performed?	Go to Step 2.	Go to “ENGINE DIAG. FLOW TABLE”.
2	Check HO2S-2 Heater and Its Circuit. 1) Warm up engine to normal operating temperature. 2) Stop engine. 3) Turn ignition switch ON and check voltage at terminal E22-4 See Fig. 1. Voltage should be over 10 V. 4) Start engine, run it at idle and check voltage at the same terminal after 1 min. from engine start. Voltage should be below 1.9 V. Are check result as specified?	Intermittent trouble. Check for intermittent referring to “Intermittent and Poor Connection” in Section 0A.	Go to Step 3.
3	Check Heater or Sensor-2. 1) Disconnect HO2S-2 coupler with ignition switch OFF. 2) Check for proper connection to HO2S-2 at “B/W” and “Bl/R” wire terminals. 3) If OK, then check heater resistance. Is it 11.7 – 15.6 Ω at 20°C, 68°F?	“Bl/R” wire open or shorted to ground or poor connection at E22-4. If wire and connection are OK, substitute a known-good ECM and recheck.	Replace HO2S-2.

Fig. 1 for Step 2

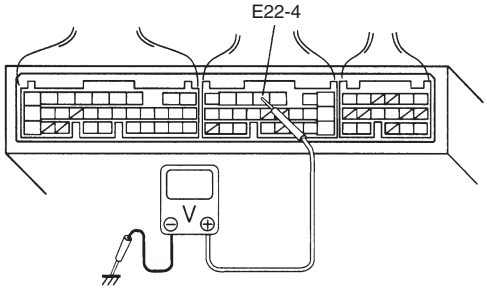

DTC P0171 FUEL SYSTEM TOO LEAN
DTC P0172 FUEL SYSTEM TOO RICH

CIRCUIT DESCRIPTION

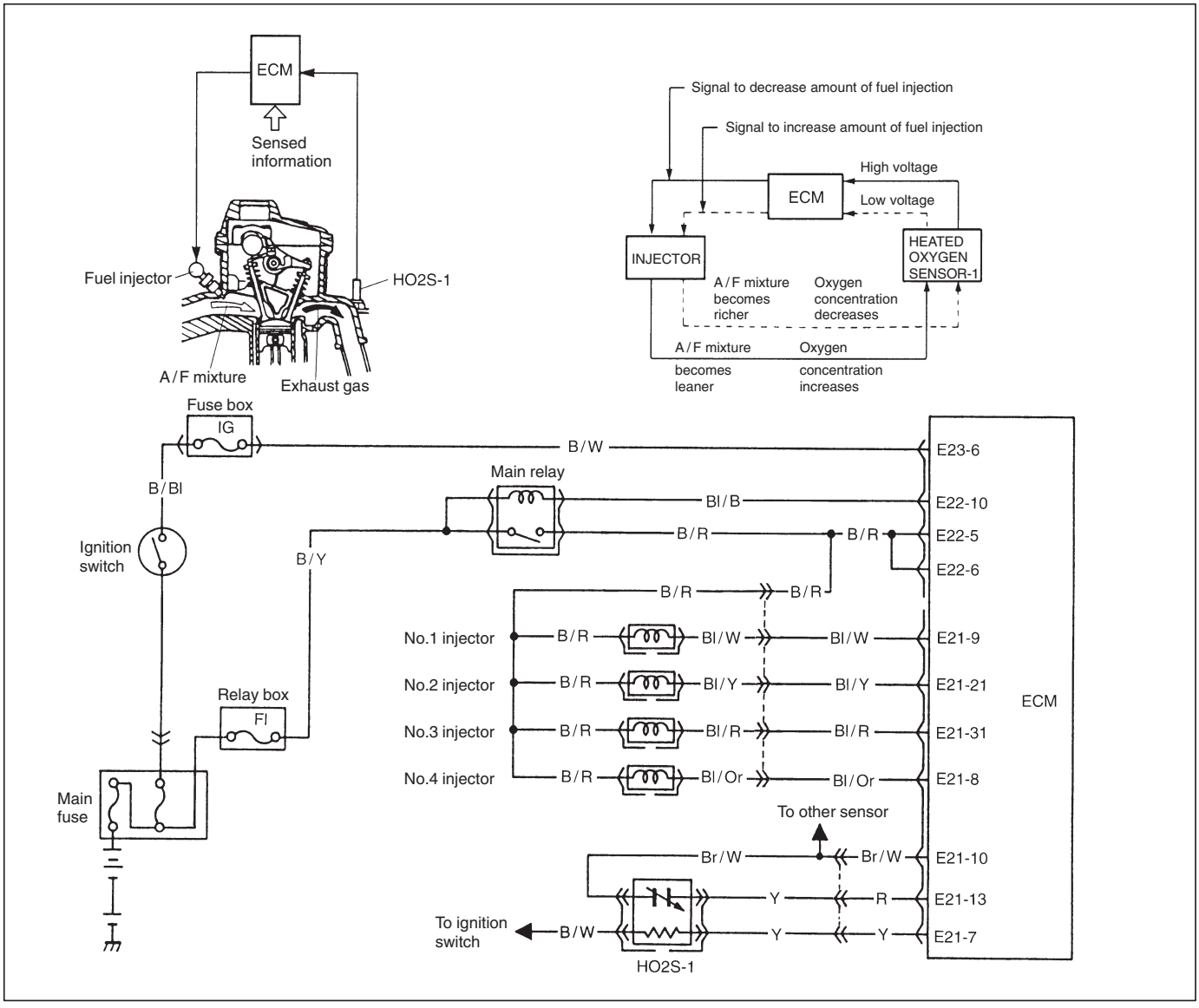

DTC DETECTING CONDITION	POSSIBLE CAUSE
● When following condition occurs while engine running under closed loop condition. – Air/fuel ratio too lean (Total fuel trim (short and long terms added) is more than 30%) or – Air/fuel ratio too rich (Total fuel trim is less than –30%) ⁎ 2 driving cycle detection logic, continuous monitoring.	● Vacuum leaks (air drawn in). ● Exhaust gas leakage. ● Heated oxygen sensor-1 circuit malfunction. ● Fuel pressure out of specification. ● Fuel injector malfunction (clogged or leakage). ● MAP sensor poor performance. ● ECT sensor poor performance. ● IAT sensor poor performance. ● TP sensor poor performance. ● EVAP control system malfunction. ● PCV valve malfunction.

DTC CONFIRMATION PROCEDURE

WARNING:
- **When performing a road test, select a place where there is no traffic or possibility of a traffic accident and be very careful during testing to avoid occurrence of an accident.**
- **Road test should be carried out with 2 persons, a driver and a tester on a level road.**

1) Turn ignition switch OFF.
2) Clear DTC with ignition switch ON.
3) Check vehicle and environmental condition for:
   – Indication of fuel level meter in combination meter: 1/4 or more
   – Altitude (barometric pressure): 2400 m, 8000 ft or less (560 mmHg, 75 kPa or more)
   – Ambient temp.: –10°C, 14°F or higher
   – Intake air temp.: 70°C, 158°F or lower
4) Start engine and drive vehicle under usual driving condition (described in DTC confirmation procedure of DTC P0136) for 5 min. or longer and until engine is warmed up to normal operating temperature.
5) Keep vehicle speed at 30 – 40 mph, 50 – 60 km/h in 5th gear or “D” range for 5 min. or more.
6) Stop vehicle (do not turn ignition switch OFF).
7) Check pending DTC in “ON BOARD TEST” or “PENDING DTC” mode and DTC in “DTC” mode.

INSPECTION

STEP	ACTION	YES	NO
1	Was “ENGINE DIAG. FLOW TABLE” performed?	Go to Step 2.	Go to “ENGINE DIAG. FLOW TABLE”.
2	Is there DTC(s) other than fuel system (DTC P0171/P0172)?	Go to applicable DTC Diag. Flow Table.	Go to Step 3.
3	Check HO2S-1 Output Voltage. 1) Connect scan tool to DLC with ignition switch OFF. See Fig. 1. 2) Warm up engine to normal operating temperature and keep it at 2000 r/min. for 60 sec. 3) Repeat racing engine (Repeat depressing accelerator pedal 5 to 6 times continuously and take foot off from pedal to enrich and enlean A/F mixture). Does HO2S-1 output voltage deflect between below 0.3 V and over 0.6 V repeatedly?	Go to Step 4.	Go to DTC P0130 Diag. Flow Table (HO2S-1 circuit check).
4	Check Fuel Pressure (Refer to section 6E for details). 1) Release fuel pressure from fuel feed line. 2) Install fuel pressure gauge. 3) Check fuel pressure. See Fig. 2. With fuel pump operating and engine at stop : 270 – 310 kPa, 2.7 – 3.1 kg/cm^2, 38.4 – 44.0 psi. At specified idle speed : 270 – 310 kPa, 2.7 – 3.1 kg/cm^2, 38.4 – 44.0 psi. Is measured value as specified?	Go to Step 5.	Go to Diag. Flow Table B-3 Fuel Pressure Check.
5	Check Fuel Injectors and Circuit. 1) Using sound scope (1) or such, check operating sound of each injector (2) when engine is running. Cycle of operating sound should vary according to engine speed. See Fig. 3. If no sound or an unusual sound is heard, check injector circuit (wire or coupler) or injector. 2) Turn ignition switch OFF and disconnect a fuel injector connector. 3) Check for proper connection to fuel injector at each terminal. 4) If OK, then check injector resistance.See Fig. 4. Injector Resistance: 12 – 13 ohm at 20°C (68°F) 5) Carry out steps 1) and 3) on each injector. 6) Check each injector for injected fuel volume referring to Section 6E. See Fig. 5. Injected Fuel Volume: 44 – 54 cc/15 sec 1.49/1.55 – 1.82/1.90 US/Imp.oz/15 sec) 7) Check each injector for fuel leakage after injector closed. Fuel Leakage: Less than 1 drop/min. Is check result in step 1) and 3) to 7) satisfactory?	Go to Step 6.	Check injector circuit or replace fuel injector(s).
6	Check EVAP Canister Purge Valve. 1) Disconnect purge hose (1) from EVAP canister. 2) Place finger against the end of disconnected hose. 3) Check that vacuum is not felt there when engine is cool and running at idle. See Fig. 6. Is vacuum felt?	Check EVAP control system (See Section 6E).	Go to Step 7.
7	Check intake manifold absolute pressure sensor for performance (See DTC P0105 Diag. Flow Table). Is it in good condition?	Go to Step 8.	Repair or replace.

STEP	ACTION	YES	NO
8	Check engine coolant temp. sensor for performance (See Section 6E). Is it in good condition?	Go to Step 9.	Replace engine coolant temp. sensor.
9	Check intake air temp. sensor for performance (See Section 6E). Is it in good condition?	Go to Step 10.	Replace intake air temp. sensor.
10	Check throttle position sensor for performance (See Step 4 of DTC P0121 Diag. Flow Table). Is it in good condition?	Go to Step 11.	Replace throttle position sensor.
11	Check PCV valve for valve clogging (See Section 6E). Is it good condition?	Substitute a known-good ECM and recheck.	Replace PCV valve.

Fig. 1 for Step 3

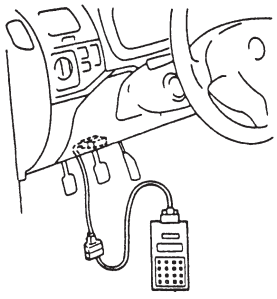

Fig. 2 for Step 4

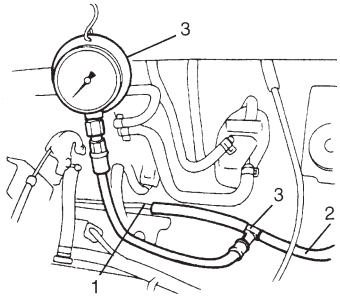

1. Fuel delivery pipe
2. Fuel feed hose
3. Fuel pressure gauge & 3 way joint

Fig. 3 for Step 5

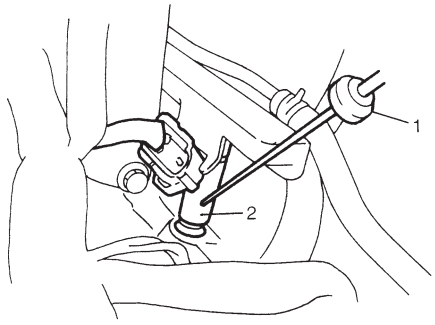

Fig. 4 for Step 5

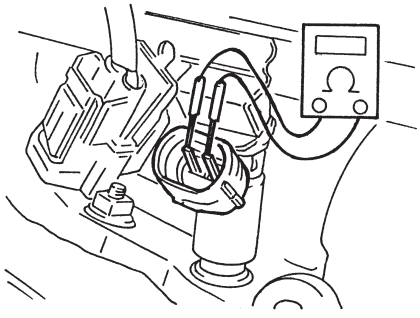

Fig. 5 for Step 5

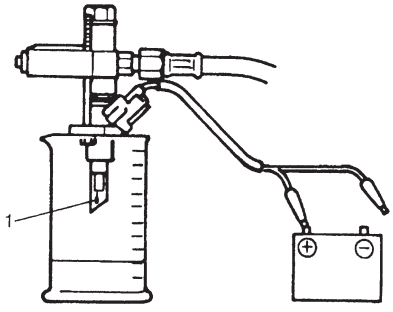

Fig. 6 for Step 6

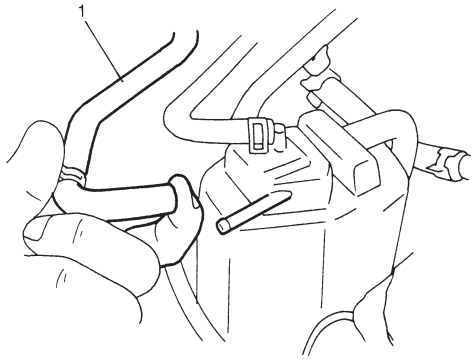

DTC P0300 RANDOM MISFIRE DETECTED (Misfire detected at 2 or more cylinders)
DTC P0301 CYLINDER 1 MISFIRE DETECTED
DTC P0302 CYLINDER 2 MISFIRE DETECTED
DTC P0303 CYLINDER 3 MISFIRE DETECTED
DTC P0304 CYLINDER 4 MISFIRE DETECTED

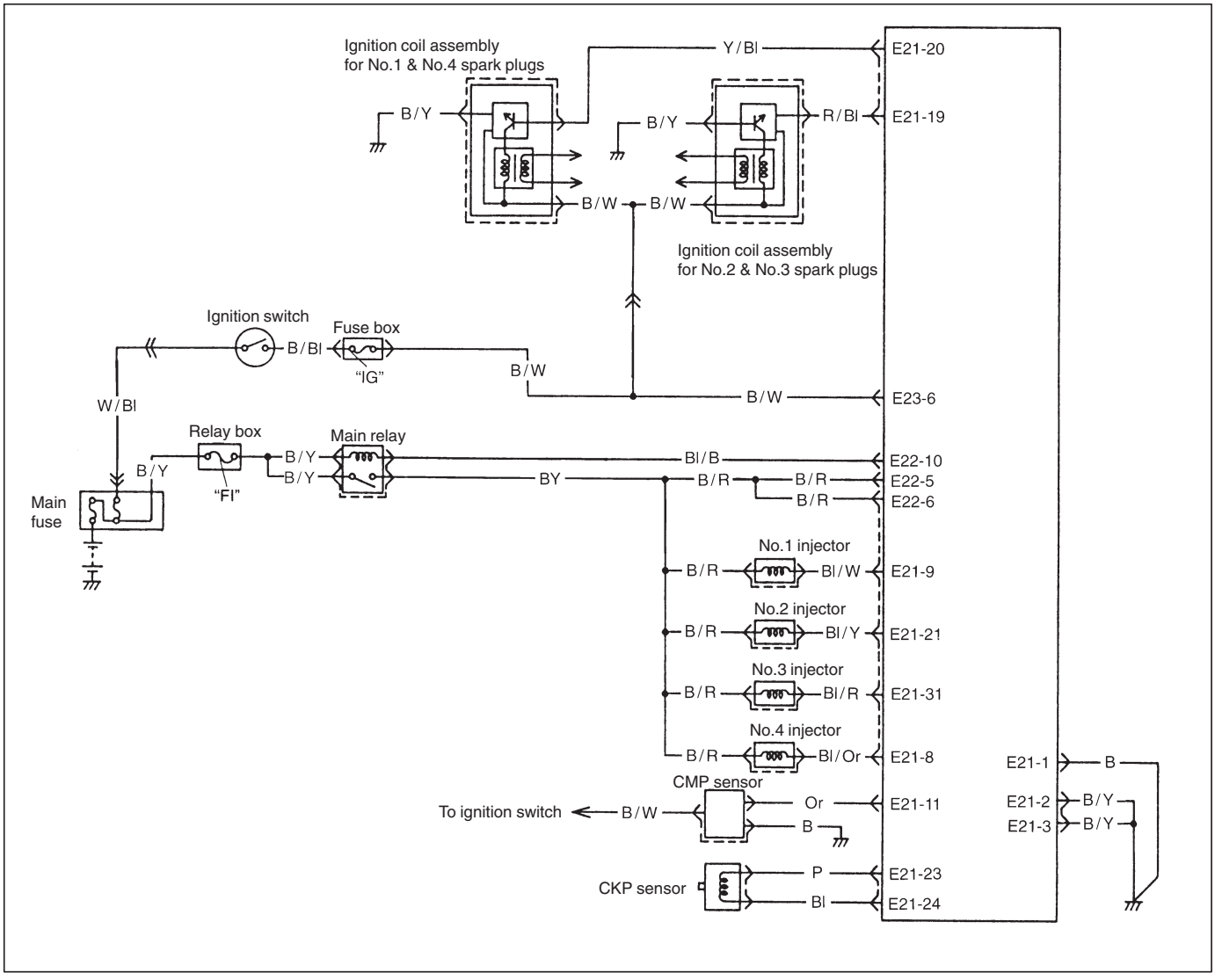

CIRCUIT DESCRIPTION

ECM monitors crankshaft revolution speed and engine speed via the crankshaft position sensor and cylinder No. via the camshaft position sensor. Then it calculates the change in the crankshaft revolution speed and from how many times such change occurred in every 200 or 1000 engine revolutions, it detects occurrence of misfire.

When ECM detects a misfire (misfire rate per 200 revolutions) which can cause overheat and damage to the three way catalytic converter, it makes the malfunction indicator lamp (MIL) flash as long as misfire occurs at that rate. After that, however, when the misfire rate drops, MIL remains ON until it has been judged as normal 3 times under the same driving conditions.

Also, when ECM detects a misfire (misfire rate per 1000 revolutions) which will not cause damage to three way catalytic converter but can cause exhaust emission to be deteriorated, it makes MIL light according to the 2 driving cycle detection logic.

DTC DETECTING CONDITION	POSSIBLE CAUSE
● Engine under other than high revolution condition ● Not on rough road ● Engine speed changing rate ● Manifold absolute pressure changing rate ● Throttle opening changing rate (Engine speed changing rate, Manifold absolute pressure changing rate, Throttle opening changing rate: Below specified value) ● Misfire rate per 200 or 1000 engine revolutions (how much and how often crankshaft revolution speed changes) is higher than specified value	● Engine overheating ● Vacuum leaks (air inhaling) from air intake system ● Ignition system malfunction (spark plug(s), high-tension cord(s), ignition coil assembly) ● Fuel pressure out of specification ● Fuel injector malfunction (clogged or leakage) ● Engine compression out of specification ● Valve lash (clearance) out of specification ● Manifold absolute pressure sensor malfunction ● Engine coolant temp. sensor malfunction ● PCV valve malfunction ● EVAP control system malfunction ● EGR system malfunction

DTC CONFIRMATION PROCEDURE

NOTE:

Among different types of random misfire, if misfire occurs at cylinders 1 and 4 or cylinders 3 and 2 simultaneously, it may not possible to reconfirm DTC by using the following DTC confirmation procedure. When diagnosing the trouble of DTC P0300 (Random misfire detected) of the engine which is apparently misfiring, even if DTC P0300 cannot be reconfirmed by using the following DTC confirmation procedure, proceed to the following Diag. Flow Table.

WARNING:
- **When performing a road test, select a place where there is no traffic or possibility of a traffic accident and be very careful during testing to avoid occurrence of an accident.**
- **Road test should be carried out with 2 persons, a driver and a tester.**

1) Turn ignition switch OFF.
2) Clear DTC with ignition switch ON.
3) Check vehicle and environmental condition for:
   – Indication of fuel level meter in combination meter: 1/4 or more
   – Altitude (barometric pressure): 2400 m, 8000 ft or less (560 mmHg, 75 kPa or more)
   – Ambient temp.: –10°C, 14°F or higher
   – Intake air temp.: 70°C, 158°F or lower
   – Engine coolant temp.: –10 – 110°C, 14 – 230°F
4) Start engine and keep it at idle for 2 min. or more.
5) Check DTC in “DTC” mode and pending DTC in “ON BOARD TEST” or “PENDING DTC” mode.
6) If DTC is not detected at idle, consult usual driving based on information obtained in “Customer complaint analysis” and “Freeze frame data check”.

Reference

Display of fuel injection signal using oscilloscope

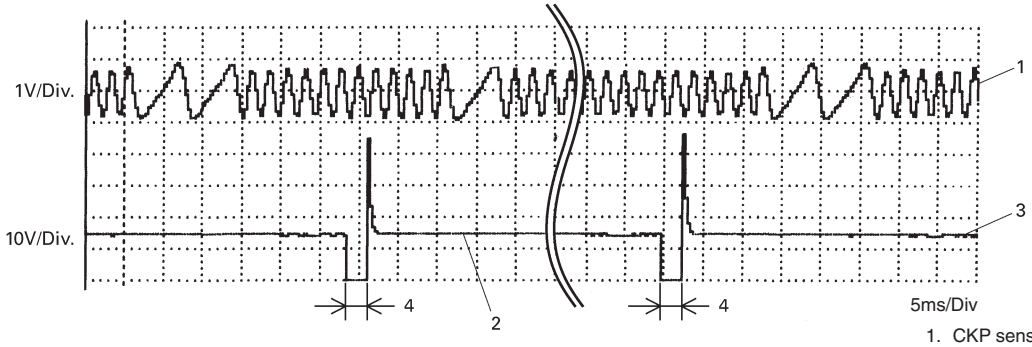

Waveforms at specified idle speed

1. CKP sensor signal
2. No.1 fuel injector signal
3. No.3 fuel injector signal
4. Fuel injection time

INSPECTION

STEP	ACTION	YES	NO
1	Was “ENGINE DIAG. FLOW TABLE” performed?	Go to Step 2.	Go to “ENGINE DIAG. FLOW TABLE“.
2	Is there DTC other than Fuel system (DTC P0171/P0172) and misfire (DTC P0300-P0304)?	Go to applicable DTC Diag. Flow Table.	Go to Step 3.
3	Check Ignition System. 1) Remove spark plugs and check them for; ● Air gap: 1.0 – 1.1 mm (0.040 – 0.043 in.) See Fig. 1. ● Carbon deposits ● Insulator damage ● Plug type If abnormality is found, adjust, clean or replace. 2) Disconnect all injector connectors. See Fig. 2. 3) Connect spark plugs to high tension cords and then ground spark plugs. 4) Crank engine and check that each spark plug sparks. Are above check results satisfactory?	Go to Step 4.	Check ignition system parts (Refer to Section 6F1).
4	Check Fuel Pressure (Refer to Section 6E for details). 1) Release fuel pressure from fuel feed line. 2) Install fuel pressure gauge. See Fig. 3. 3) Check fuel pressure. With fuel pump operating and engine at stop : 270 – 310 kPa, 2.7 – 3.1 kg/cm^2, 38.4 – 44.0 psi. At specified idle speed : 270 – 310 kPa, 2.7 – 3.1 kg/cm^2, 38.4 – 44.0 psi. Is measured value as specified?	Go to Step 5.	Go to Diag. Flow Table B-3 fuel pressure check.
5	Check Fuel Injectors and Circuit. 1) Using sound scope (1) or such, check operating sound of each injector (2) when engine is running. Cycle of operating sound should very according to engine speed. See Fig 4. If no sound or an unusual sound is heard, check injector circuit (wire or coupler) or injector. 2) Turn ignition switch OFF and disconnect a fuel injector connector. 3) Check for proper connection to fuel injector at each terminal. 4) If OK, then check injector resistance. See Fig. 5. Injector Resistance: 12 – 13 ohm at 20°C (68°F) 5) Carry out steps 1) and 3) on each injector. 6) Check each injector for injected fuel volume referring to Section 6E. See Fig. 6. Injected Fuel Volume: 40 – 50 cc/15 sec (1.35/1.41 – 1.69/1.76 US/Imp. oz/15 sec) 7) Check each injector for fuel leakage after injector closed. Fuel Leakage: Less than 1 drop/min. Is check result in step 1) and 3) to 7) satisfactory?	Go to Step 6.	Check injector circuit or replace fuel injector(s).

STEP	ACTION	YES	NO
6	Check PCV valve for clogging (See Section 6E). Is it in good condition?	Go to Step 7.	Replace PCV valve.
7	Check EVAP Canister Purge Valve for Closing. 1) Disconnect purge hose (1) from EVAP canister. 2) Place finger against the end of disconnected hose. 3) Check that vacuum is not felt there, when engine is cool and running at idle. See Fig. 7. Is vacuum felt?	Check EVAP control system (See Section 6E).	Go to Step 8.
8	Check intake manifold pressure sensor for performance (See DTC P0105 Diag. Flow Table). Is it in good condition?	Go to Step 9.	Repair or replace.
9	Check engine coolant temp. sensor for performance (See Section 6E). Is it in good condition?	Go to Step 10.	Replace engine coolant temp. sensor.
10	Check parts or system which can cause engine rough idle or poor performance. – Engine compression (See Section 6A1). – Valve lash (See Section 6A1). – Valve timing (Timing belt installation. See Section 6A1). Are they in good condition?	Check wire harness and connection of ECM ground, ignition system and fuel injector for intermittent open and short.	Repair or replace.

Fig. 1 for Step 3

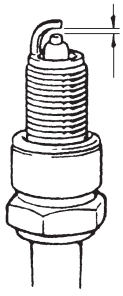

Fig. 2 for Step 3

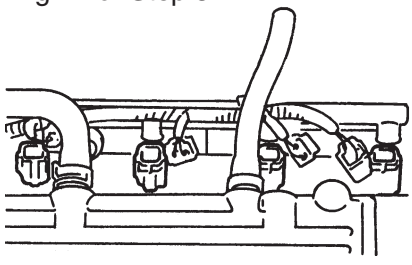

Disconnect connectors when checking plugs for spark

Fig. 3 for Step 4

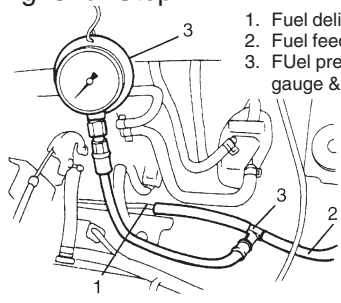

Fig. 4 for Step 5

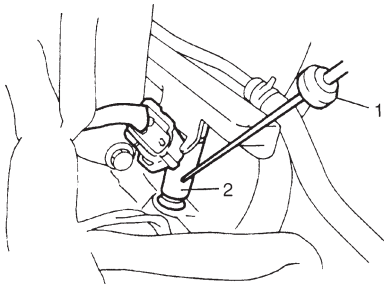

Fig. 5 for Step 4

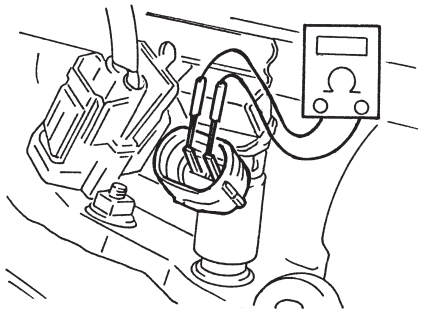

Fig. 6 for Step 5

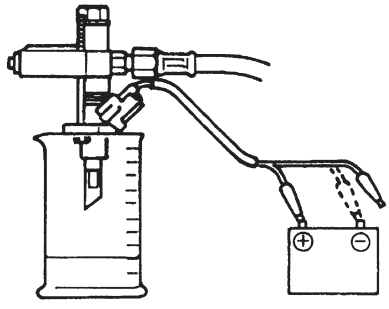

Fig. 7 for Step 7

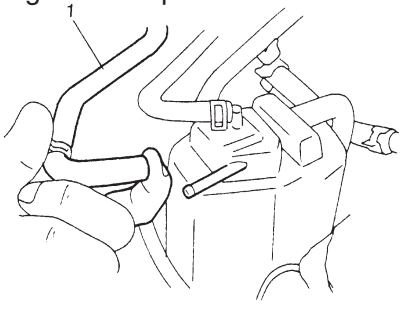

DTC P0325 (DTC No.17) KNOCK SENSOR CIRCUIT MALFUNCTION

CIRCUIT DESCRIPTION

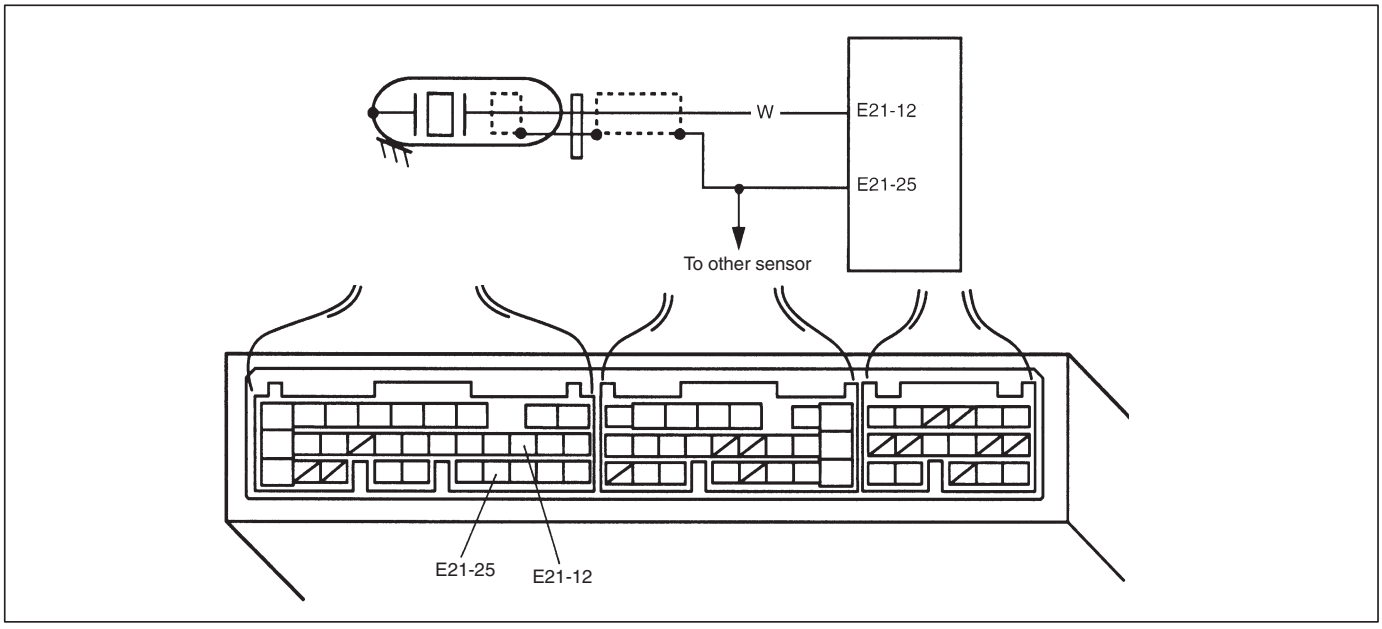

DTC DETECTING CONDITION	POSSIBLE CAUSE
● KNOCK: 3.75 V or more ● KNOCK: 1.25 V or less	● "W" circuit open or shorted to ground ● KNOCK sensor malfunction ● ECM malfunction

DTC CONFIRMATION PROCEDURE

1) Clear DTC, start engine and keep it at idle for 1 min.
2) Select "DTC" mode on scan tool and check DTC.

INSPECTION

STEP	ACTION	YES	NO
1	Was "ENGINE DIAG. FLOW TABLE performed?	Go to Step 2.	Go to "ENGINE DIAG. FLOW TABLE".
2	1) With engine running, check voltage from "E21-12" terminal of ECM connector to body ground. See Fig. 1. 2) Is voltage about 1.25 – 3.75 V?	Knock sensor and its circuit are in good condition. Intermittent trouble or faulty ECM. Recheck, referring to INTERMITTENT TROUBLE in Section 0A.	Go to Step 3.
3	1) Stop engine. 2) With ignition switch at OFF position, disconnect knock sensor connector. 3) With ignition switch at ON position, check voltage from "W" to body ground terminal of knock sensor connector. See Fig. 2. 4) Is it 4 – 5 V?	Faulty knock sensor. Substitute a known-good knock sensor and recheck.	"W" wire open, shorted to ground circuit or poor "E21-12" connection. If wire and connection are OK, substitute a known-good ECM and recheck.

Fig. 1 for Step 2

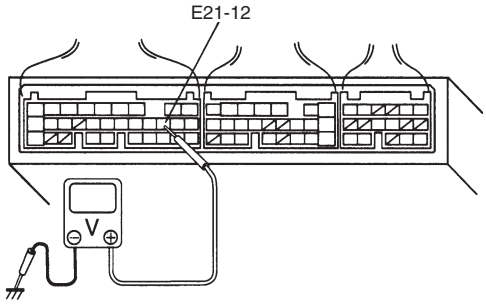

Fig. 2 for Step 2

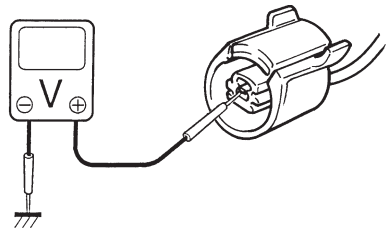

DTC P0335 CRANKSHAFT POSITION (CKP) SENSOR CIRCUIT (DTC No.23) MALFUNCTION

CIRCUIT DESCRIPTION

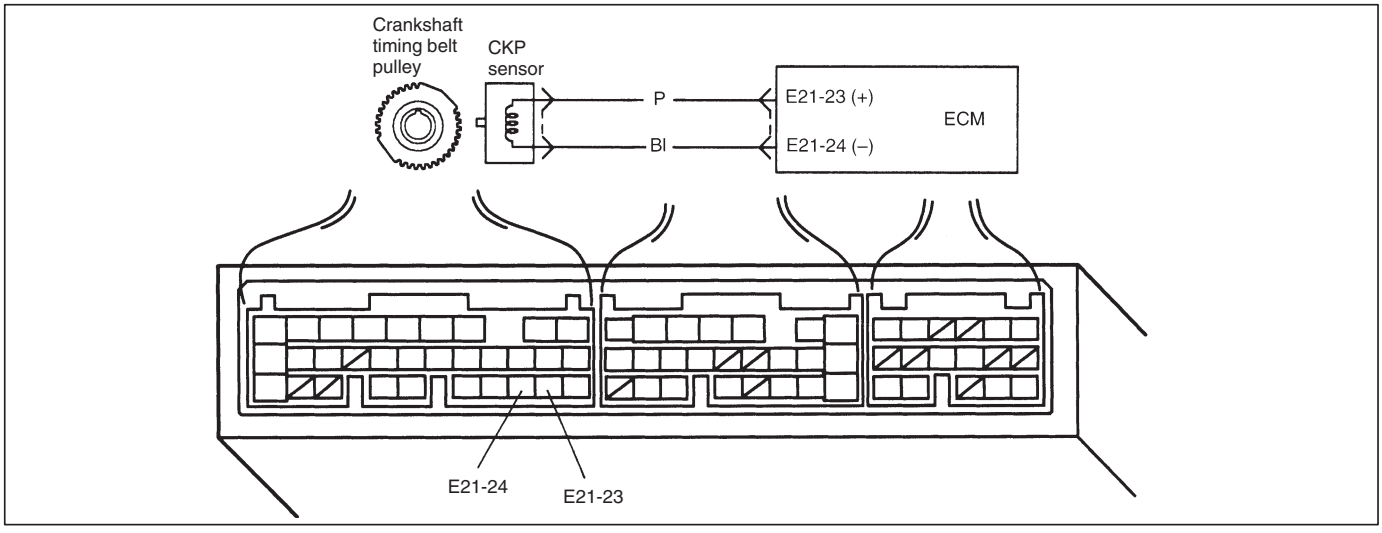

DTC DETECTING CONDITION	POSSIBLE CAUSE
● NO CKP sensor signal for 2 seconds at engine cranking.	● CKP sensor circuit open or short. ● Crankshaft timing belt pulley teeth damaged. ● CKP sensor malfunction, foreign material being attached or improper installation. ● ECM malfunction.

Reference

Connect oscilloscope between terminals C20-3 (+) and C20-11 (–) of ECM connector connected to ECM and check CKP sensor signal.

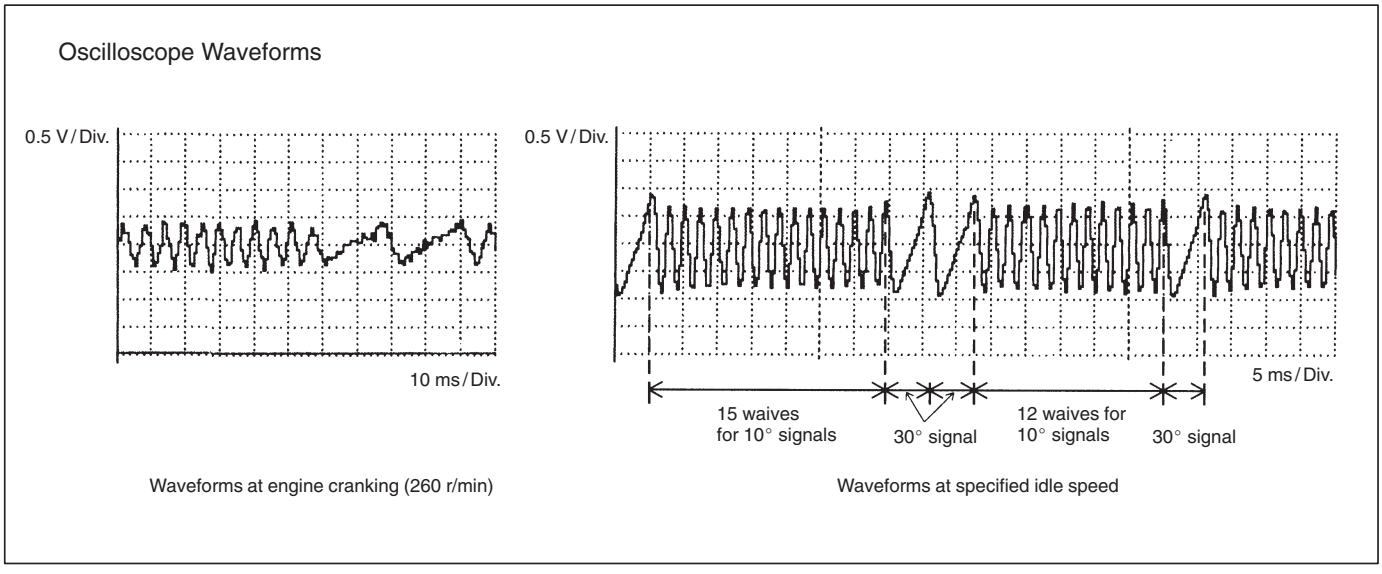

DTC CONFIRMATION PROCEDURE

1) Clear DTC and crank engine for 2 sec.
2) Select “DTC” mode on scan tool and check DTC.

INSPECTION

NOTE:

If starter circuit is open (i.e., start signal circuit is OK but starter fails to run), this DTC is stored in memory at starter switch ON, even though CKP sensor is in good condition.

When starter motor fails to run and this DTC appears, check starter circuit first.

STEP	ACTION	YES	NO
1	Was “ENGINE DIAG. FLOW TABLE” performed?	Go to Step 2.	Go to “ENGINE DIAG. FLOW TABLE”.
2	Is there DTC P1500 (Engine starter signal circuit)?	Go to DTC P1500 Diag. Flow Table.	Go to Step 3.
3	Check CKP Sensor for Resistance. 1) Disconnect CKP sensor connector with ignition switch OFF. 2) Then check for proper connection to CKP sensor at “P” and “Bl” wire terminals. 3) If OK, measure sensor resistance between terminals. See Fig. 1. CKP sensor resistance: 360 – 460 Ω at 20°C, 68°F 4) Measure resistance between each terminal and ground. Insulation resistance: 1 MΩ or more. Were measured resistance valves in step 3) and 4) as specified?	Go to Step 4.	Replace CKP sensor.
4	Check visually CKP sensor and pulley for the following. See Fig. 2. ● Damage ● No foreign material attached. ● Correct installation. Are they in good condition?	“P” or “Bl” wire open or shorted to ground, or poor connection at E21-23 or E21-24. If wire and connection are OK, intermittent trouble or faulty ECM. Recheck for intermittent referring to “Intermittent and Poor Connection” in Section 0A.	Clean, repair or replace.

Fig. 1 for Step 3

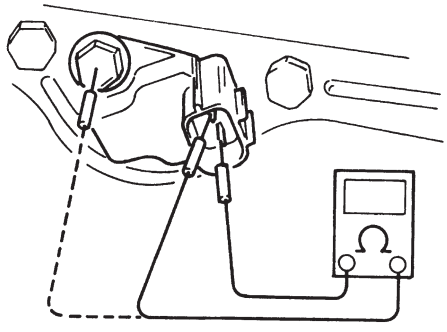

Fig. 2 for Step 4

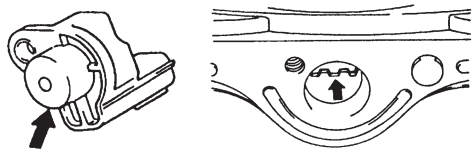

DTC P0340 CAMSHAFT POSITION (CMP) SENSOR CIRCUIT (DTC No.15) MALFUNCTION

CIRCUIT DESCRIPTION

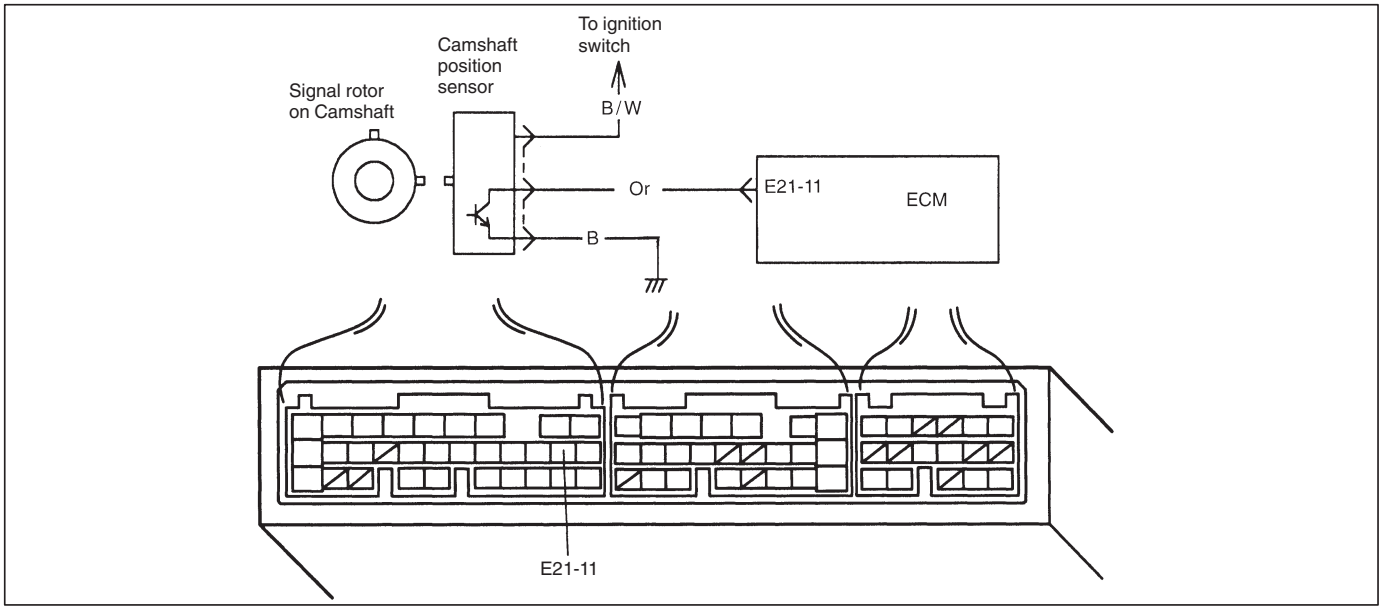

DTC DETECTING CONDITION	POSSIBLE CAUSE
● No CMP sensor signal during engine running (CKP sensor signal is inputted).	● CMP sensor circuit open or short. ● Signal rotor teeth damaged. ● CMP sensor malfunction, foreign material being attached or improper installation. ● ECM malfunction.

Reference

Connect oscilloscope between terminals E21-11 of ECM connector connected to ECM and body ground and check CKP sensor signal.

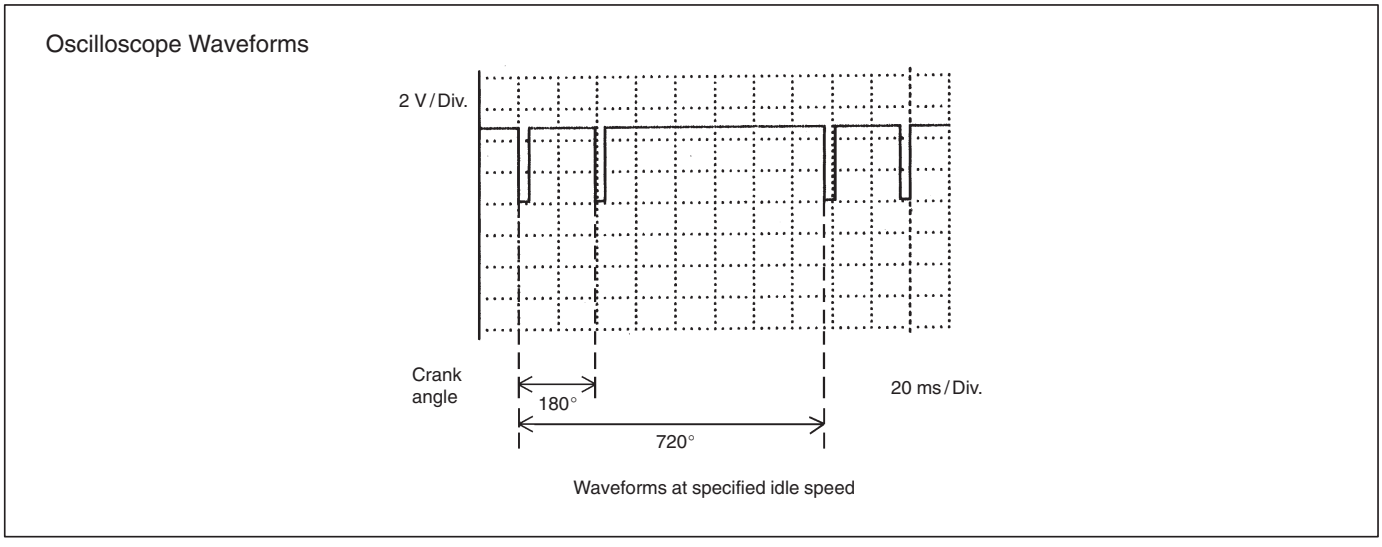

DTC CONFIRMATION PROCEDURE

1) Clear DTC.
2) Start engine and keep it at idle for 1 min.
3) Select “DTC” mode on scan tool and check DTC.

INSPECTION

STEP	ACTION	YES	NO
1	Was “ENGINE DIAG. FLOW TABLE” performed?	Go to Step 2.	Go to “ENGINE DIAG. FLOW TABLE”.
2	Check CMP Sensor and connector for proper installation. Is CMP sensor installed properly and connector connected securely?	Go to Step 3.	Correct.
3	Check Wire Harness and Connection. 1) Disconnect connector from CMP sensor. 2) Check for proper connection to CMP sensor at each terminal. 3) If OK, turn ignition switch ON and check for voltage at each terminal of sensor connection disconnected. See Fig. 1. Terminal “B+” : 10 – 14 V Terminal “Vout” : 4 – 5 V Terminal “GND” : 0 V Is check result satisfactory?	Go to Step 5.	Go to Step 4.
4	Was terminal “Vout” voltage out of specification in Step 3 check?	“Or” wire open, short or poor connection. If wire and connection are OK, substitute a known-good ECM and recheck.	“B/W” or “B” wire open, short or poor connection.
5	Check Ground Circuit for Open. 1) Turn ignition switch OFF. 2) Check for continuity between “GND” terminal of CMP sensor connector and engine ground. Is continuity indicated?	Go to Step 6.	“B” wire open or poor ground connection.
6	Check CMP Sensor for Operation. 1) Remove CMP sensor from sensor case. 2) Remove metal particles on end face of CMP sensor, if any. 3) Connect each connector to ECM and CMP sensor. 4) Turn ignition switch ON. 5) Check for voltage at terminal E21-11 of connector connected to ECM by passing magnetic substance (iron) while keeping approximately 1 mm (0.03 in.) gap with respect to end face of CMP sensor. See Fig. 2 and 3. Does voltage vary from low (0 – 1 V) to high (4 – 5 V) or from high to low?	Go to Step 7.	Replace CMP sensor.

STEP	ACTION	YES	NO
7	Check signal rotor for the following, using mirror. See Fig. 4. ● Damage ● No foreign material attached Is it in good condition?	Intermittent trouble or faulty ECM. Check for intermittent referring to "Intermittent and Poor Connection" in Section 0A.	Clean rotor teeth or replace CMP sensor.

Fig. 1 for Step 3

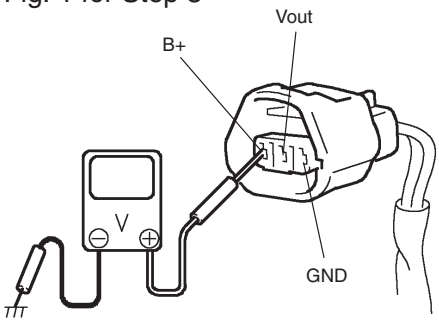

Fig. 2 for Step 6

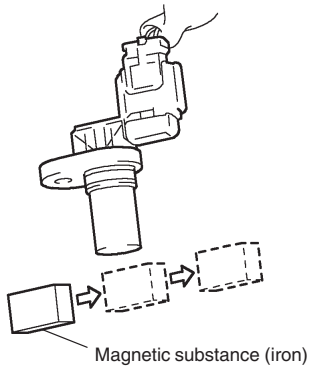

Fig. 3 for Step 6

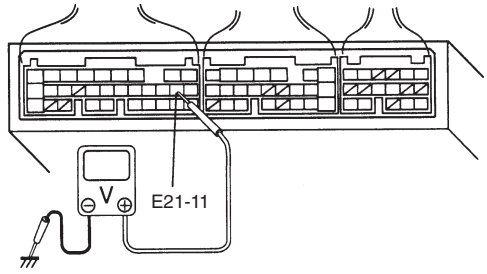

Fig. 4 for Step 7

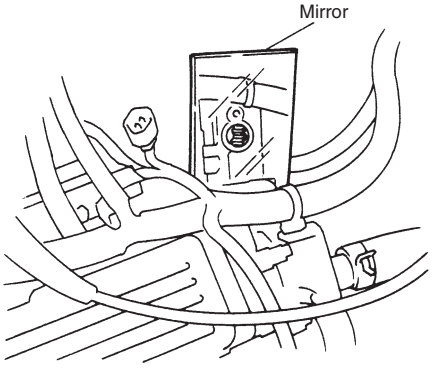

DTC P0400 EXHAUST GAS RECIRCULATION FLOW MALFUNCTION

CIRCUIT DESCRIPTION

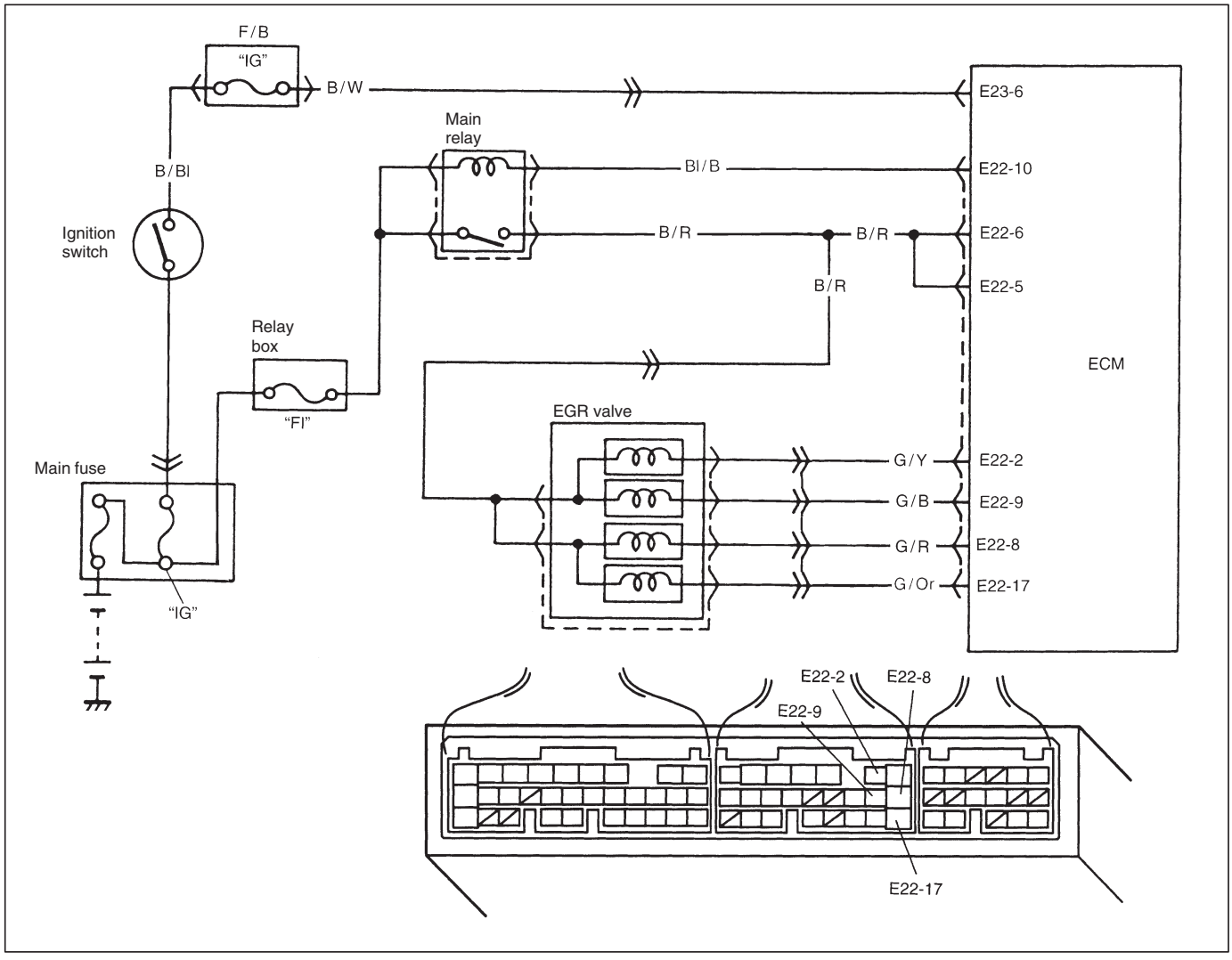

DTC DETECTING CONDITION	POSSIBLE CAUSE
● While running at specified vehicle speed after engine warm-up ● During deceleration (engine speed high with closed throttle position ON) in which fuel cut is involved, difference in intake manifold absolute pressure between when EGR valve is opened at specified value and when it is closed is larger or smaller than specified value. 2 driving cycle detection logic, monitoring once/1 driving	● EGR valve or its circuit ● EGR passage ● ECM

DTC CONFIRMATION PROCEDURE

WARNING:
- **When performing a road test, select a place where there is no traffic or possibility of a traffic accident and be very careful during testing to avoid occurrence of an accident.**
- **Road test should be carried out with 2 persons, a driver and a tester, on a level road.**

1) Turn ignition switch OFF.
   Clear DTC with ignition switch ON, check vehicle and environmental condition for:
   – Indication of fuel level meter in combination meter: 1/4 or more
   – Altitude (barometric pressure): 2400 m, 8000 ft or less (560 mmHg, 75 kPa or more)
   – Ambient temp.: –10°C, 14°F or higher
   – Intake air temp.: 70°C, 122°F or lower
2) Start engine and warm it up to normal operating temperature (70 – 110°C, 158 – 230°F) and run it at idle for 5 min.
3) Increase vehicle speed to 50 – 55 mph, 80 – 88 km/h in 5th gear or in “D” range.
4) Hold throttle valve at that opening position for 2 min. or longer.
5) Increase engine speed to 4000 r/min. in 3rd gear or in “2” range.
6) Release accelerator pedal and with engine brake applied, keep vehicle coasting (fuel cut condition) till engine speed reaches 1500 r/min.
7) Stop vehicle (don’t turn ignition switch OFF) and confirm test results according to following “Test Result Confirmation Flow Table.”

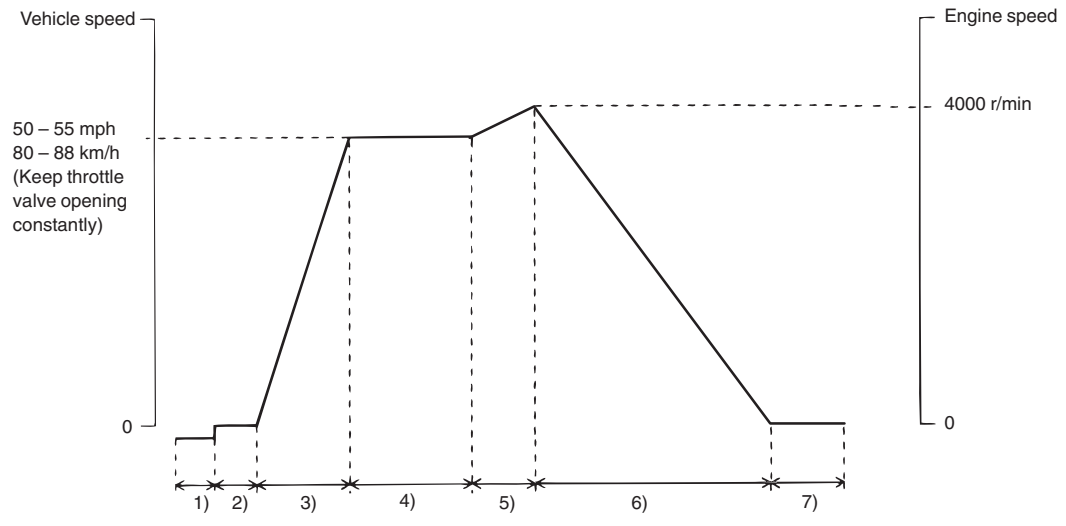

Test Result Confirmation Flow Table

STEP	ACTION	YES	NO
1	Check DTC in “DTC” mode and pending DTC in “ON BOARD TEST”. Is DTC or pending DTC displayed?	Proceed to applicable DTC flow table.	Go to Step 2.
2	Set scan tool to “READINESS TESTS” mode and check if testing has been completed. Is test completed?	No DTC is detected. (Confirmation test is completed)	Repeat DTC confirmation procedure.

DTC P0400

INSPECTION

STEP	ACTION	YES	NO
1	Was “ENGINE DIAG. FLOW TABLE” performed?	Go to Step 2.	Go to “ENGINE DIAG. FLOW TABLE”.
2	1) Turn ignition switch ON. 2) Does EGR stepper motor operation for 0.6 second after ignition switch OFF?	Go to Step 3.	Go to Step 6.
3	With ignition switch at OFF, check voltage between E22-2, 8, 9, 17 terminals of ECM and body ground. Is voltage about 0 V? See Fig. 2. Next turn ignition switch to ON, check voltage between E22-2, 8, 9, 17 terminals of ECM and body ground. Is voltage within 10 – 14 V?	Go to Step 4.	Go to Step 7.
4	Do you have SUZUKI scan tool?	Go to Step 5.	Stuck or faulty EGR valve or clogged EGR gas passage. If all above are OK, substitute a known-good ECM and recheck.
5	Check EGR system referring to “EGR SYSTEM -system inspection” in Section 6E. Is check result satisfactory?	Substitute a known-good ECM and recheck.	Stuck or faulty EGR valve or clogged EGR gas passage.
6	1) Disconnect EGR valve coupler with ignition switch OFF. 2) Check voltage between “B/R” wire terminals of EGR valve coupler and body ground with ignition switch ON. See Fig. 1. 3) Are they about 10 – 14 V?	Go to Step 3.	“B/R” wire open or short
7	Check EGR valve referring to “EGR SYSTEM -Inspection” in Section 6E. Is it good condition?	EGR valve harness (“G/Y”, “G/B”, “G/R” or “G/Or” wire) open or short or poor coupler connection (D09-2, E22-2, 8, 9, 17) If wire harness and connection are OK, substitute a known-good ECM and recheck.	Faulty EGR valve

Fig. 1 for step 6

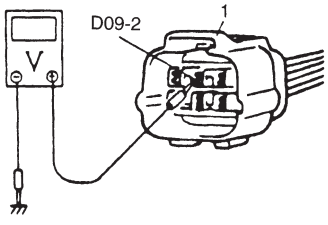

1. EGR valve coupler

Fig. 2 for step 3

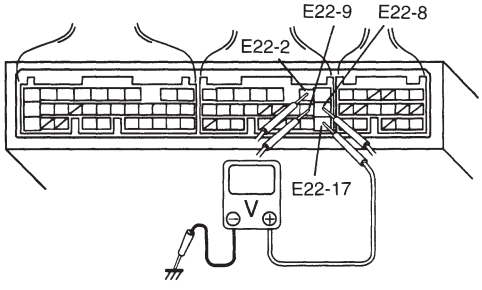

DTC P0420 CATALYST SYSTEM EFFICIENCY BELOW THRESHOLD

CIRCUIT DESCRIPTION

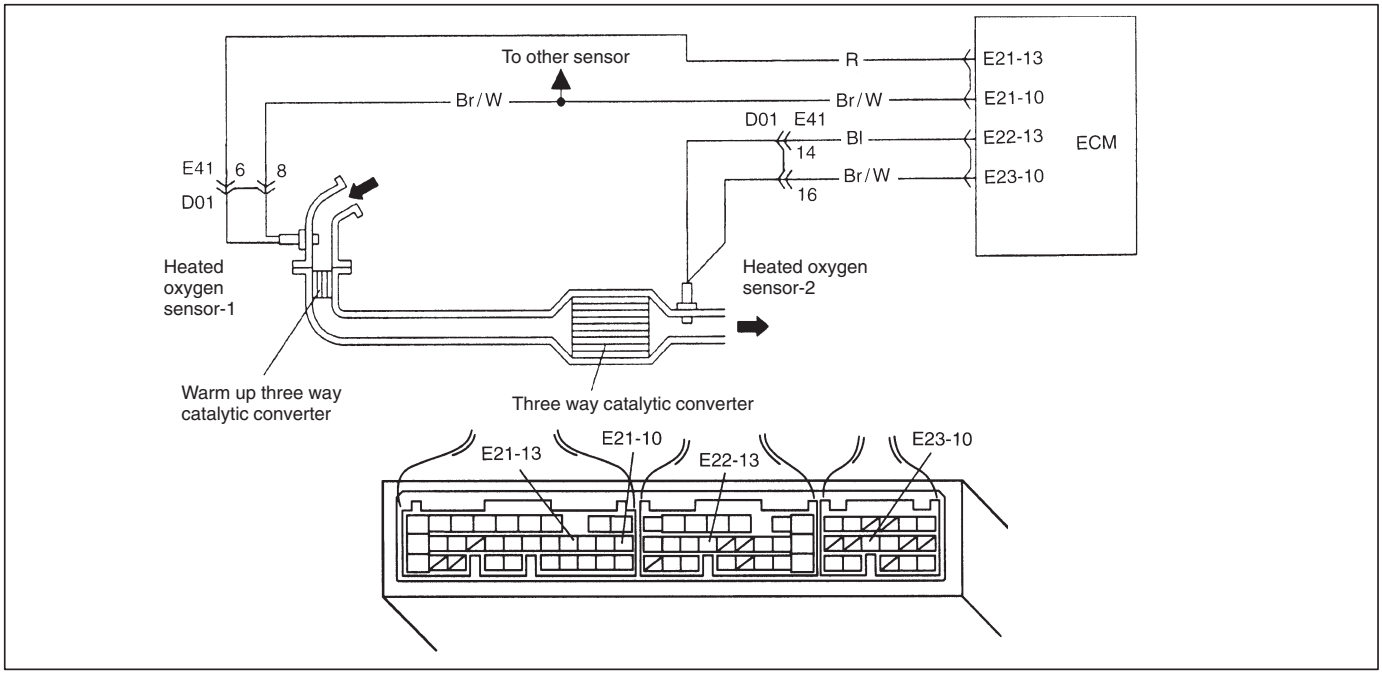

ECM monitors oxygen concentration in the exhaust gas which has passed the three way catalytic converter by HO2S-2.

When the catalyst is functioning properly, the variation cycle of HO2S-2 output voltage (oxygen concentration) is slower than that of HO2S-1 output voltage because of the amount of oxygen in the exhaust gas which has been stored in the catalyst.

Reference

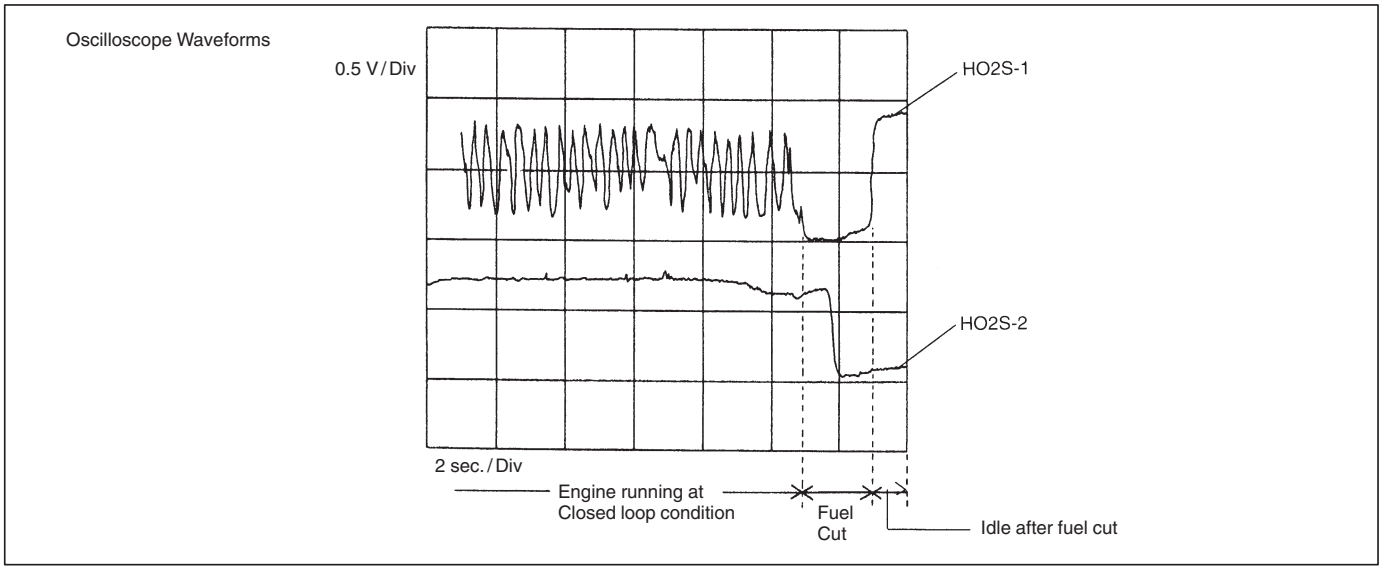

DTC DETECTING CONDITION	POSSIBLE CAUSE
● While vehicle running at constant speed under other than high load. ● Time from rich or lean switching command is output till HO2S-2 output voltage crosses 0.45 V is less than specified value. 2 driving cycle detection logic, monitoring once/1 driving.	● Exhaust gas leak ● Three way catalytic converter malfunction ● Fuel system malfunction ● HO2S-2 malfunction ● HO2S-1 malfunction

DTC CONFIRMATION PROCEDURE

WARNING:
- **When performing a road test, select a place where there is no traffic or possibility of a traffic accident and be very careful during testing to avoid occurrence of an accident.**
- **Road test should be carried out with 2 persons, a driver and tester, on a level road.**

1) Turn ignition switch OFF.
   Clear DTC with ignition switch ON, check vehicle and environmental condition for:
   – Indication of fuel level meter in combination meter: 1/4 or more
   – Altitude (barometric pressure): 2400 m, 8000 ft or less (560 mmHg, 75 kPa or more)
   – Ambient temp.: –10°C, 14°F or higher
   – Intake air temp.: 70°C, 158°F or lower
   – Engine coolant temp.: 70 – 110°C, 158 – 230°F
2) Start engine and drive vehicle at 35 – 45 mph, 55 – 65 km/h for 8 min. or longer.
   While this driving, if "Catalyst Monitoring TEST COMPLETED" is displayed in "READINESS TESTS" mode and DTC is not displayed in "DTC" mode, confirmation test is completed.
   If "TEST NOT COMPLTD" is still being displayed, continue test driving.
3) Decrease vehicle speed at 30 – 40 mph, 50 – 60 km/h, and hold throttle valve at that opening position for 2 min. and confirm that short term fuel trim vary within –20% –+20% range.
4) Stop vehicle (do not turn ignition switch OFF) and confirm test results according to following "Test Result Confirmation Flow Table".

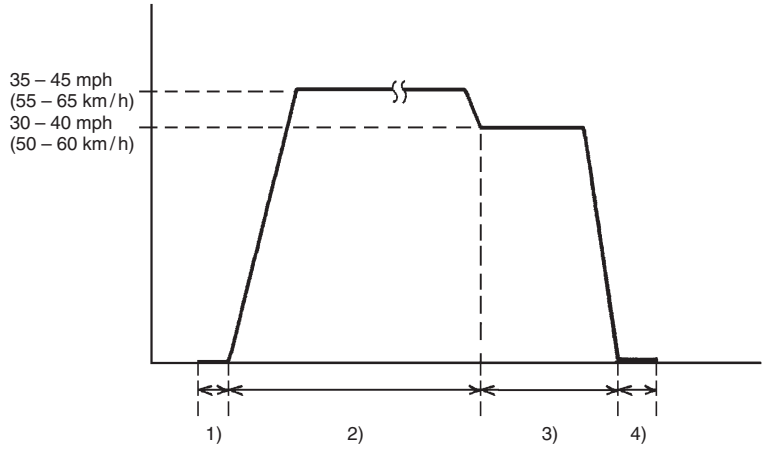

Test Result Confirmation Flow Table

STEP	ACTION	YES	NO
1	Check DTC in "DTC" mode and pending DTC in "ON BOARD TEST" or "PENDING DTC" mode. Is DTC or pending DTC displayed?	Proceed to applicable DTC Diag. Flow Table.	Go to Step 2.
2	Set scan tool to "READINESS TESTS" mode and check if testing has been completed. Is test completed?	No DTC is detected (confirmation test is completed).	Repeat DTC confirmation procedure.

DTC P0420

INSPECTION

STEP	ACTION	YES	NO
1	Was “ENGINE DIAG. FLOW TABLE” performed?	Go to Step 2.	Go to “ENGINE DIAG. FLOW TABLE”.
2	Check Short Term Fuel Trim. Did short term fuel trim vary within –20% –+20% range in step 3) of DTC confirmation test?	Go to Step 3.	Check fuel system. Go to DTC P0171/P0172 Diag. Flow Table.
3	Check HO2S-2 for Output Voltage. Perform steps 1) through 9) of DTC confirmation procedure for DTC P0136 (HO2S-2 malfunction) and check output voltage of HO2S-2 then. Is over 0.6 V and below 0.3 V indicated?	Replace three way catalytic converter.	Check “Bl” and “Br/W” wires for open and short, and connections for poor connection. If wires and connections are OK, replace HO2S-2.

DTC P0443 PURGE CONTROL VALVE CIRCUIT MALFUNCTION

CIRCUIT DESCRIPTION

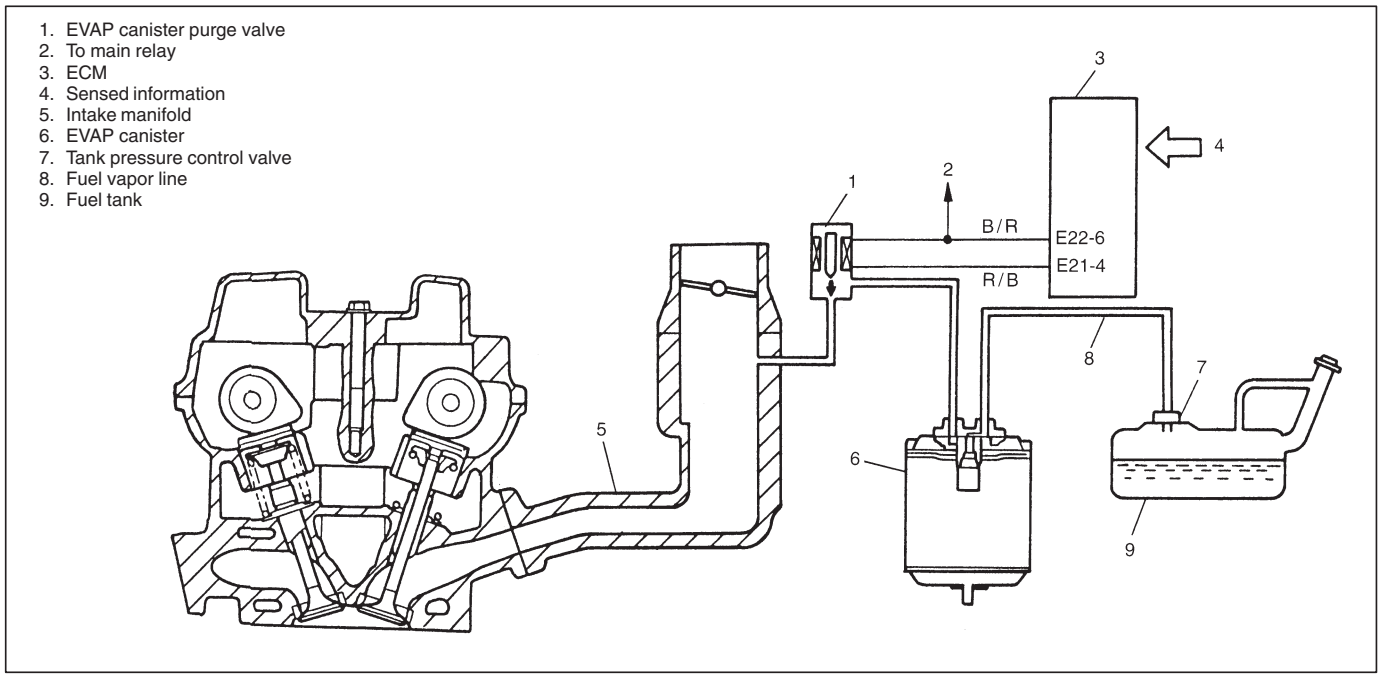

DTC DETECTING CONDITION	POSSIBLE CAUSE
Canister Purge control valve circuit is opened or shorted.	● "R/B" circuit open or short ● "B/R" wire open ● Canister purge valve malfunction

DTC CONFIRMATION PROCEDURE

1) Clear DTC with ignition switch ON.
2) Select "DTC" mode on scan tool and check DTC.

INSPECTION

STEP	ACTION	YES	NO
1	Check EVAP canister purge valve operation 1) With ignition switch OFF, disconnect coupler from canister purge valve. 2) Check resistance of EVAP canister purge valve. Resistance between two terminals : 30 – 34 Ω at 20°C (68°F) Resistance between terminal and body : 1M Ω or higher Is it as specified?	"R/B" circuit open or short, "B/R" circuit open, poor EVAP canister purge valve coupler connection.	Replace EVAP canister purge valve.

Fig. 1 for Step 1

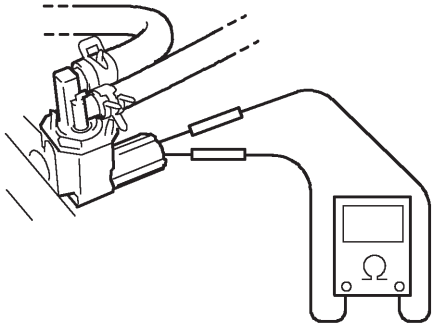

DTC P0480 RADIATOR COOLING FAN CONTROL SYSTEM MALFUNCTION

CIRCUIT DESCRIPTION

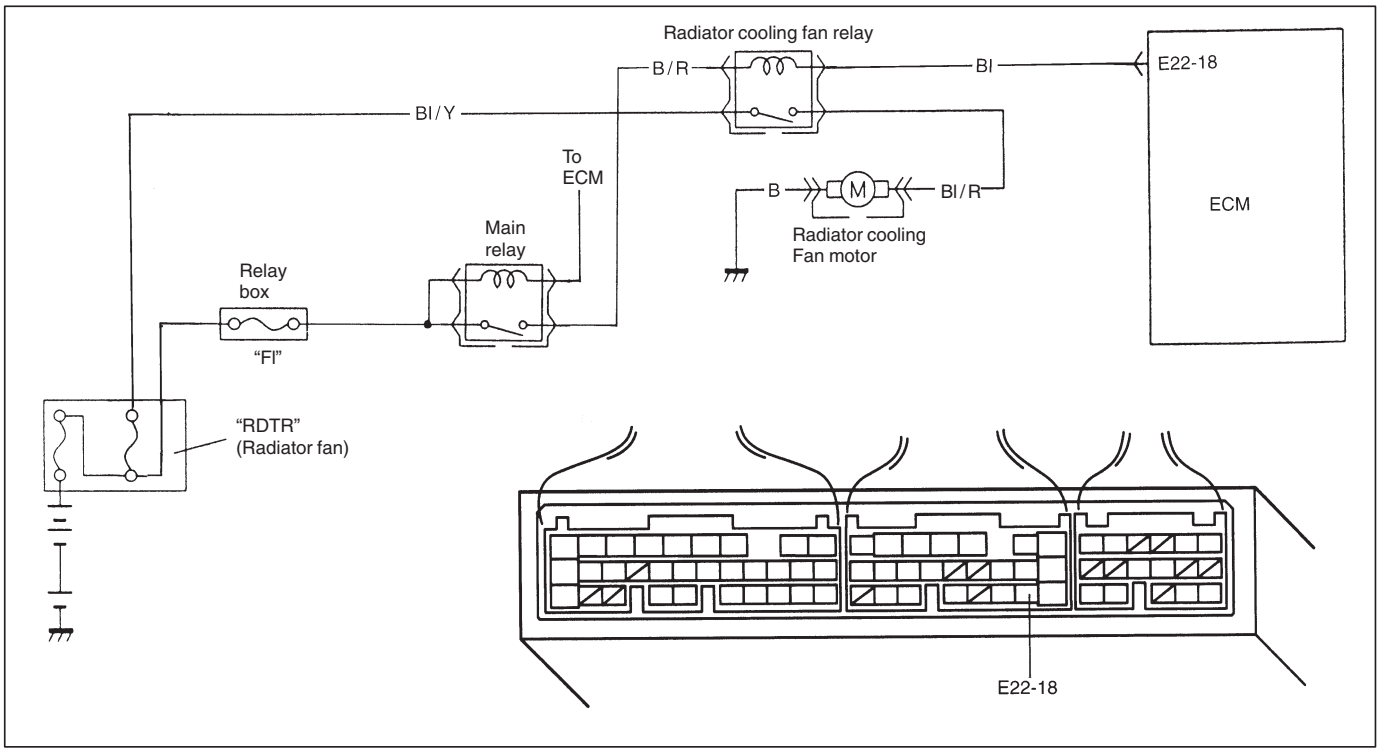

DTC DETECTING CONDITION	POSSIBLE CAUSE
● Low voltage at terminal E22-18 when engine coolant temp. is below 93°C, 200°F. 2 driving cycle detection logic, continuous monitoring.	● "B/R" or "BI" circuit open or short ● Radiator cooling fan relay malfunction ● ECM malfunction

DTC CONFIRMATION PROCEDURE

1) Turn ignition switch OFF.
2) Clear DTC with ignition switch ON.
3) Warm up engine until radiator cooling fan starts to operate.
4) Check pending DTC in "ON BOARD TEST" or "PENDING DTC" mode and DTC in "DTC" mode.

DTC P0480

INSPECTION

STEP	ACTION	YES	NO
1	Was “ENGINE DIAG. FLOW TABLE” performed?	Go to Step 2.	Go to “ENGINE DIAG. FLOW TABLE”.
2	Check Radiator Cooling Fan Relay and Its Circuit. 1) Turn ignition switch ON. 2) Check for voltage at terminal E22-18 of ECM connector connected, under following condition. See Fig. 1. When engine coolant temp. is lower than 93°C, 200°F and A/C switch turns OFF: 10 – 14 V Is voltage as specified?	Intermittent trouble or faulty ECM. Check for intermittent referring to “Intermittent and Poor Connection” in Section 0A.	Go to Step 3.
3	Check Radiator Cooling Fan Control Relay. 1) Turn ignition switch OFF and remove radiator cooling fan relay. 2) Check for proper connection to the relay at “B/R” and “Bl” wire terminals. 3) If OK, then measure resistance between terminals a and b. See Fig. 2 and 3. Is it 100 – 150 Ω?	“B/R” or “Bl” circuit open or short. If wires and connections are OK, substitute a known-good ECM and recheck.	Replace radiator cooling fan relay.

Fig. 1 for Step 2

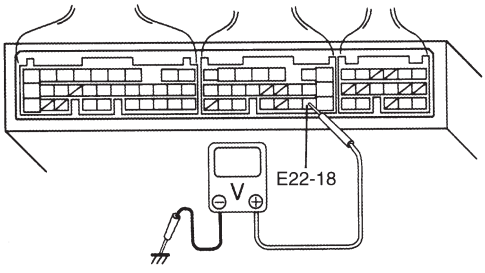

Fig. 2 for Step 3

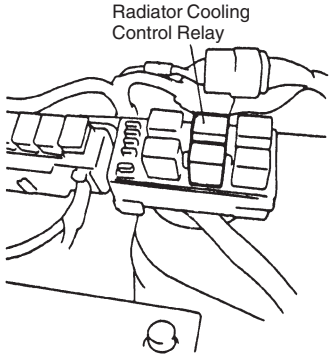

Fig. 3 for Step 3

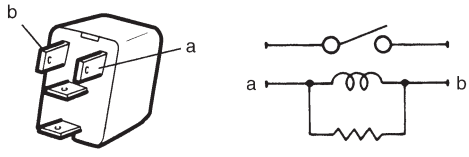

DTC P0500 (DTC NO.16) VEHICLE SPEED SENSOR (VSS) MALFUNCTION

CIRCUIT DESCRIPTION

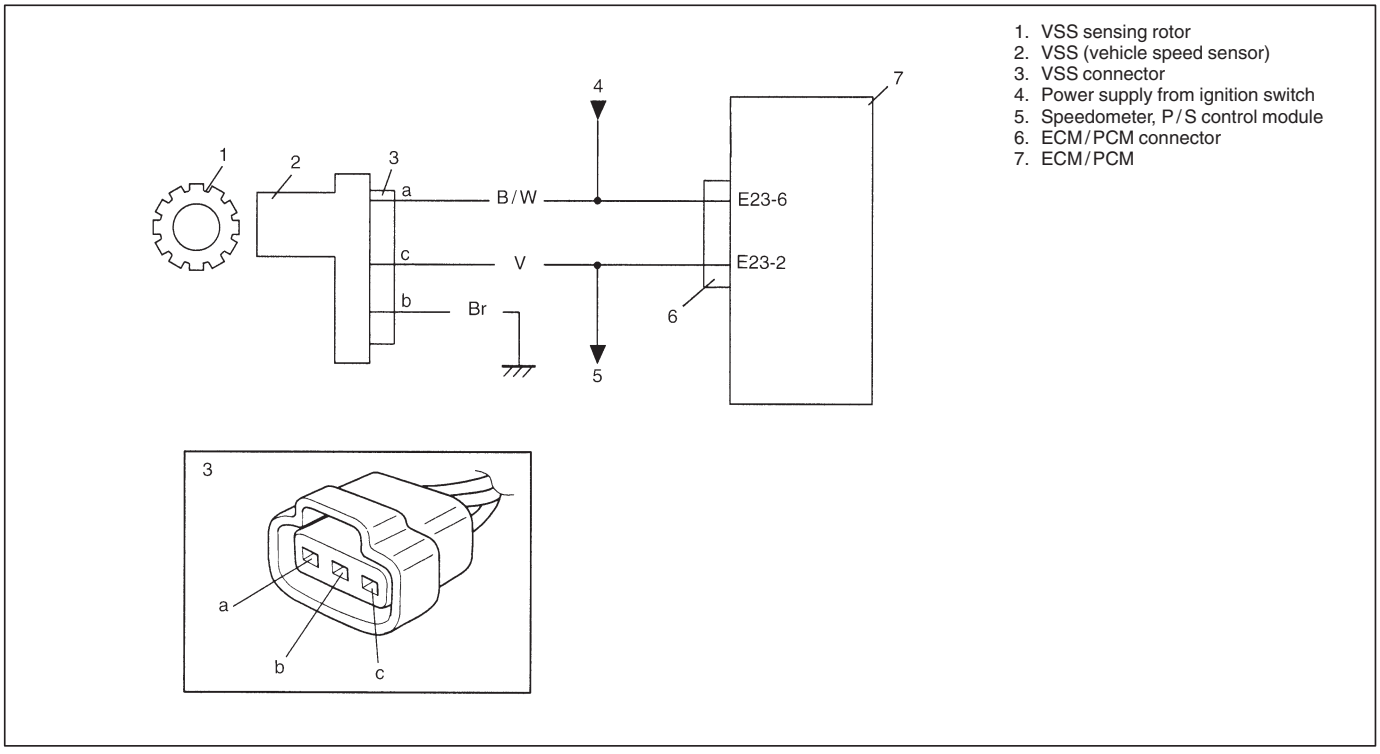

DTC DETECTING CONDITION	POSSIBLE CAUSE
● VSS signal not inputted while vehicle running in “D” range or during fuel cut at deceleration. 2 driving cycle detection logic, continuous monitoring	● “Br” circuit open ● “V” or “B/W” circuit open or short ● VSS (speedometer driven gear) malfunction ● ECM malfunction ● Speedometer malfunction

DTC CONFIRMATION PROCEDURE

WARNING:
- **When performing a road test, select a place where there is no traffic or possibility of a traffic accident and be very careful during testing to avoid occurrence of an accident.**
- **Road test should be carried out with 2 persons, a driver and a tester.**

1) Clear DTC and warm up engine to normal operating temperature.
2) Increase vehicle speed to 50 mph, 80 km/h in 3rd gear or “2” range while observing vehicle speed displayed on scan tool.
3) Release accelerator pedal and with engine brake applied, keep vehicle coasting (fuel cut condition) for 4 sec. or more.
4) Check pending DTC and DTC.

DTC P0500

INSPECTION

STEP	ACTION	YES	NO
1	Was “ENGINE DIAG. FLOW TABLE” performed?	Go to Step 2.	Go to “ENGINE DIAG. FLOW TABLE”.
2	Does speedometer indicate vehicle speed?	Go to Step 3.	Go to Step 5.
3	Check Vehicle Speed Signal. Is vehicle speed displayed on scan tool in step 2) and 3) of DTC confirmation procedure?	Intermittent trouble or faulty ECM. Check for intermittent referring to “Intermittent and Poor Connection” in Section 0A.	Go to Step 4.
4	1) Turn ignition switch to OFF position. 2) Disconnect combination meter connectors. Refer to Section 8C. 3) Disconnect P/S control module connector (if equipped). 4) Turn ignition switch to ON position, without running engine. 5) Measure voltage from terminal “c” of VSS connector to ground. Is voltage within 4 – 5 V?	Faulty speedometer. Faulty P/S control module.	“V” wire open or short. Poor connection of ECM connector terminal. If OK, substitute a known-good ECM and recheck.
5	1) With ignition switch at OFF position, disconnect VSS connector. 2) Turn ignition switch to ON position, without running engine. 3) Measure voltage from terminal “a” to “b” of VSS connector. Is voltage within 10 – 14 V?	Go to Step 6.	“B/W” or “Br” wire open or short.
6	1) Measure voltage from terminal “c” of VSS connector to ground. Is voltage more than 4 V?	Go to Step 7.	“V” wire open or short. Poor connection of ECM connector terminal. If OK, substitute a known-good ECM and recheck.
7	1) Remove VSS. 2) Visually inspect VSS sensor signal rotor for damage. Was any damage found?	Faulty VSS signal rotor.	Poor connection of VSS connector terminal. If OK, substitute a known-good VSS and recheck.

Fig. 1 for Step 5

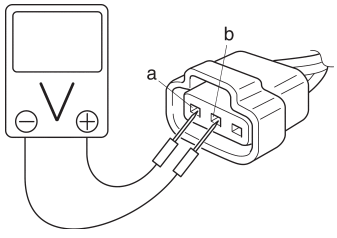

Fig. 2 for Step 4 and Step 6

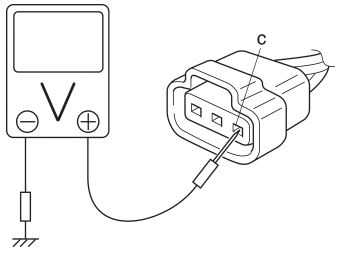

DTC P0505 (DTC No.26) IDLE CONTROL SYSTEM MALFUNCTION

CIRCUIT DESCRIPTION

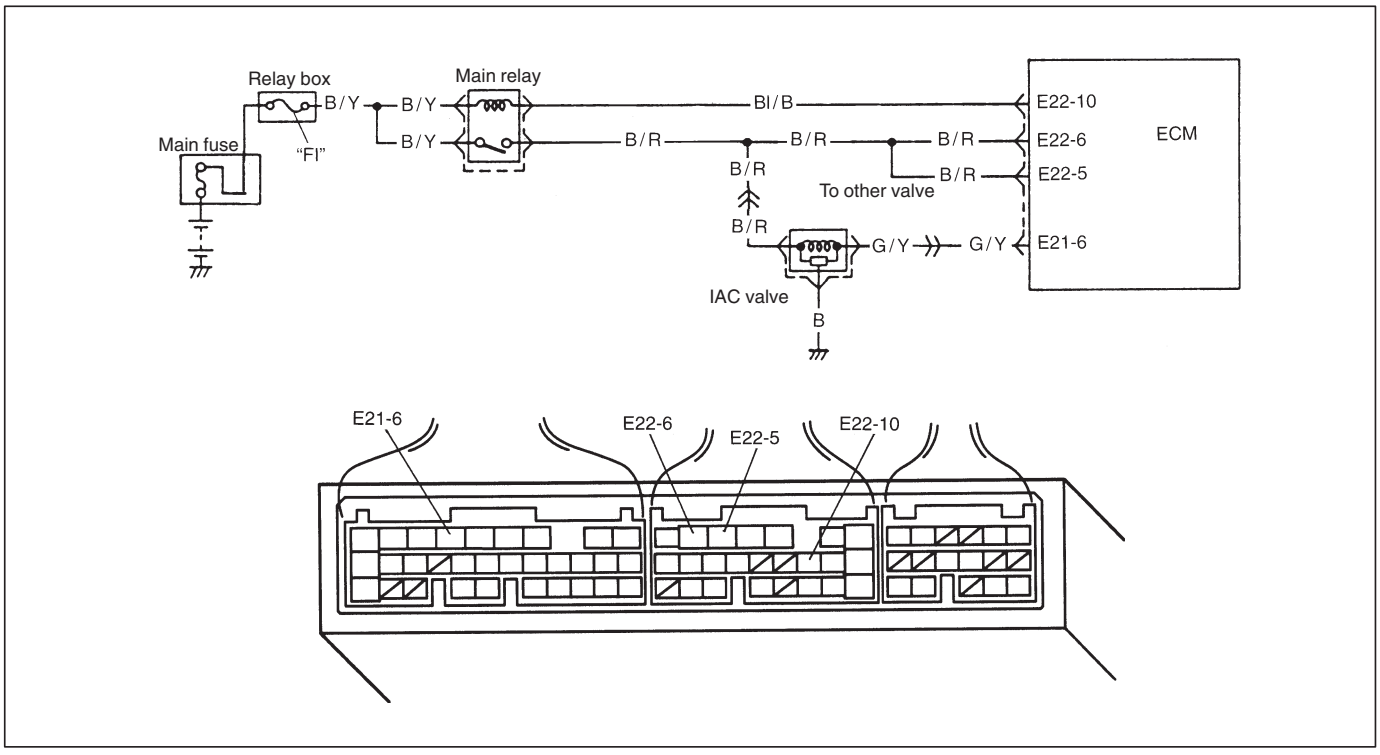

DTC DETECTING CONDITION	POSSIBLE CAUSE
● No closed signal to IAC valve is detected after engine start. 2 driving cycle detection logic, continuous monitoring.	● "B/R", "G/Y" or "B" circuit open or short ● IAC valve malfunction ● ECM malfunction

DTC CONFIRMATION PROCEDURE

1) Turn ignition switch OFF.
2) Clear DTC with ignition switch ON.
3) Start engine and run it at idle for 1 min.
4) Check DTC and pending DTC.

DTC P0505

INSPECTION

STEP	ACTION	YES	NO
1	Was “ENGINE DIAG. FLOW TABLE” performed?	Go to Step 2.	Go to “ENGINE DIAG. FLOW TABLE”.
2	Check Idle Air Control System. When using SUZUKI scan tool: 1) Connect SUZUKI scan tool to DLC with ignition switch OFF, set parking brake and block drive wheels. 2) Warm up engine to normal operating temperature. 3) Clear DTC and select “MISC TEST” mode on SUZUKI scan tool. See Fig. 1. Is it possible to control (increase and reduce) engine idle speed by using SUZUKI scan tool? When not using SUZUKI scan tool: 1) Remove IAC valve from throttle boy referring to “IAC Valve Removal” in Section 6E. 2) Check IAC valve for operation referring to “IAC Valve Inspection” in Section 6E. See Fig. 2. Is check result satisfactory?	Intermittent trouble or faulty ECM. Check for intermittent referring to “Intermittent and Poor Connection” in Section 0A.	Go to Step 3.
3	Check Wire Harness for Open and Short. 1) Turn ignition switch OFF. 2) Disconnect IAC valve connector. 3) Check for proper connection to IAC valve at each terminals. 4) If OK, disconnect ECM connector. 5) Check for proper connection to ECM at E21-6 terminal. 6) If OK, check “B/R”, “G/Y” and “B” circuit for open and short. Are they in good condition?	Replace IAC valve and recheck.	Repair or replace.

Fig. 1 for Step 2

When using SUZUKI scan tool:

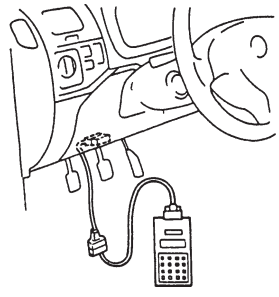

Fig. 2 for Step 2

When not using SUZUKI scan tool:

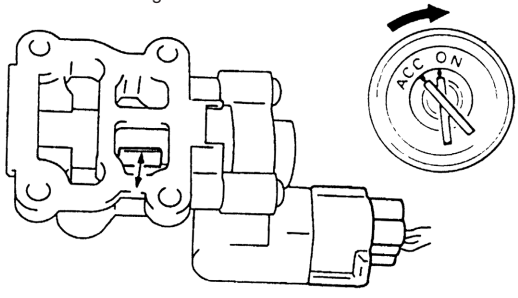

DTC P0601 INTERNAL CONTROL MODULE MEMORY CHECK SUM ERROR

DTC DETECTING CONDITION	POSSIBLE CAUSE
DTC P0601: Data write error (or check sum error) when written into ECM 2 driving cycle detection logic, continuous monitoring.	ECM

DTC CONFIRMATION PROCEDURE

1) Turn ignition switch OFF.
2) Clear DTC with ignition switch ON and then turn ignition switch OFF.
3) Start engine and run it at idle if possible.
4) Check pending DTC in “ON BOARD TEST” or “PENDING DTC” mode and DTC in “DTC” mode.

INSPECTION

Substitute a known-good ECM and recheck.

DTC P1450 BAROMETRIC PRESSURE SENSOR LOW/HIGH (DTC No.29) INPUT

DTC P1451 BAROMETRIC PRESSURE SENSOR PERFORMANCE PROBLEM

WIRING DIAGRAM/CIRCUIT DESCRIPTION

Barometric pressure sensor is installed in ECM.

DTC DETECTING CONDITION	POSSIBLE CAUSE
DTC P1450: ● Barometric pressure: 136 kPa 1025 mmHg or higher, or 33 kPa 250 mmHg or lower	● ECM (barometric pressure sensor) malfunction
DTC P1451: ● Vehicle stopped ● Engine cranking ● Difference between barometric pressure and intake manifold absolute pressure is 26 kPa, 200 mmHg or more 2 driving cycle detection logic, monitoring once/1 driving.	● Manifold absolute pressure sensor and its circuit malfunction ● ECM (barometric pressure sensor) malfunction

DTC CONFIRMATION PROCEDURE

1) Turn ignition switch OFF.
2) Clear DTC with ignition switch ON.
3) Turn ignition switch ON for 2 sec., crank engine for 2 sec. and run it at idle for 1 min.
4) Check pending DTC in “ON BOARD TEST” or “PENDING DTC” mode and DTC in “DTC” mode.

INSPECTION

DTC P1450:

Substitute a known-good ECM and recheck.

DTC P1451:

NOTE:

Note that atmospheric pressure varies depending on weather conditions as well as altitude. Take that into consideration when performing these check.

STEP	ACTION	YES	NO
1	1) Connect scan tool to DLC with ignition switch OFF. 2) Turn ignition switch ON and select “DATA LIST” mode on scan tool. 3) Check manifold absolute pressure. See Fig. 1. Is it barometric pressure (approx. 100 kPa, 760 mmHg) at sea level?	Substitute a known-good ECM and recheck.	Go to Step 2.

Fig. 1 for Step 1

When using SUZUKI scan tool:

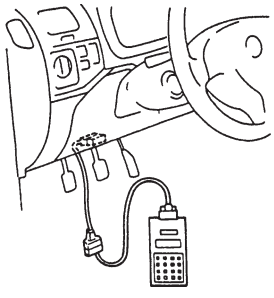

<table>
<tr><th>STEP</th><th>ACTION</th><th>YES</th><th>NO</th></tr>
<tr><td>2</td><td>Check MAP Sensor
1) Remove MAP sensor from intake manifold and connect vacuum pump gauge to MAP sensor. See Fig. 2.
2) Connect scan tool to DLC and turn ignition switch ON.
3) Check intake manifold absolute pressure displayed on scan tool under following conditions.
<table>
<tr><th>Applying Vacuum</th><th>Displayed Value on Scan Tool</th></tr>
<tr><td>0</td><td>Barometric pressure
(Approx. 100 kPa, 760 mmHg)</td></tr>
<tr><td>27 kPa
200 mmHg</td><td>Barometric pressure –27 kPa
(Approx. 73 kPa, 560 mmHg</td></tr>
<tr><td>67 kPa
500 mmHg</td><td>Barometric pressure –67 kPa
(Approx. 33 kPa, 260 mmHg)</td></tr>
</table>
Is check result satisfactory?</td><td>Check air intake system for air being drawn in and engine compression.
If OK, then substitute a known-good ECM and recheck.</td><td>Replace MAP sensor.</td></tr>
</table>

Fig. 2 for Step 2

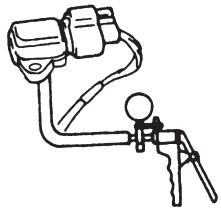

DTC P1500 ENGINE STARTER SIGNAL CIRCUIT MALFUNCTION

CIRCUIT DESCRIPTION

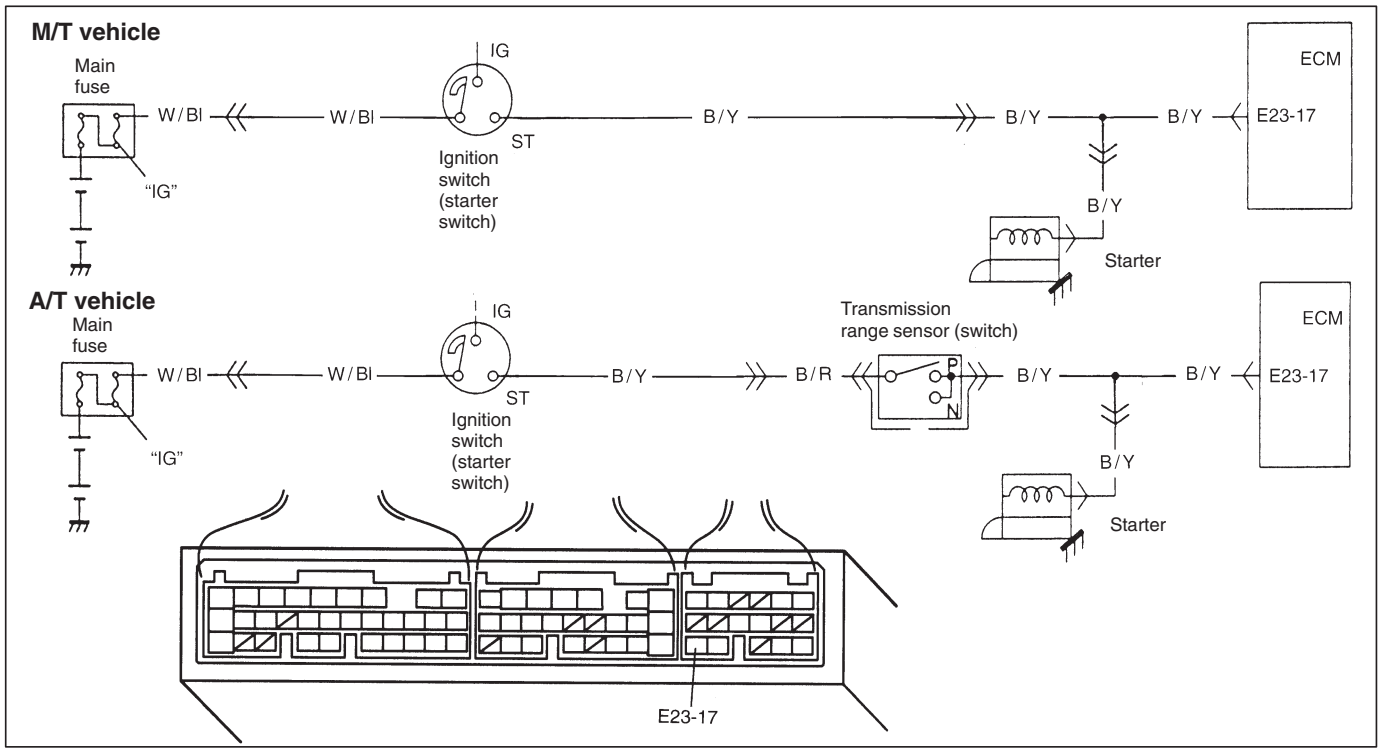

DTC DETECTING CONDITION	POSSIBLE CAUSE
● Low voltage at terminal E23-17 when cranking engine or ● High voltage at terminal E23-17 after starting engine. 2 driving cycle detection logic, continuous monitoring.	● "B/Y" circuit open ● ECM malfunction

DTC CONFIRMATION PROCEDURE

1) Turn ignition switch OFF.
2) Clear DTC with ignition switch ON, crank engine and run it at idle for 3 min.
3) Check pending DTC in "ON BOARD TEST" or "PENDING DTC" mode and DTC in "DTC" mode.

INSPECTION

STEP	ACTION	YES	NO
1	Was "ENGINE DIAG. FLOW TABLE" performed?	Go to Step 2.	Go to "ENGINE DIAG. FLOW TABLE".
2	Check for voltage at terminal E23-17 of ECM connector connected, under following condition. While engine cranking : 6 – 10 V After starting engine : 0 V Is voltage as specified?	Poor E23-17 connection or intermittent trouble. Check for intermittent referring to "Intermittent and Poor Connection" in Section 0A. If wire and connections are OK, substitute a known-good ECM and recheck.	"B/Y" circuit open.

DTC P1510 ECM BACK-UP POWER SUPPLY MALFUNCTION

CIRCUIT DESCRIPTION

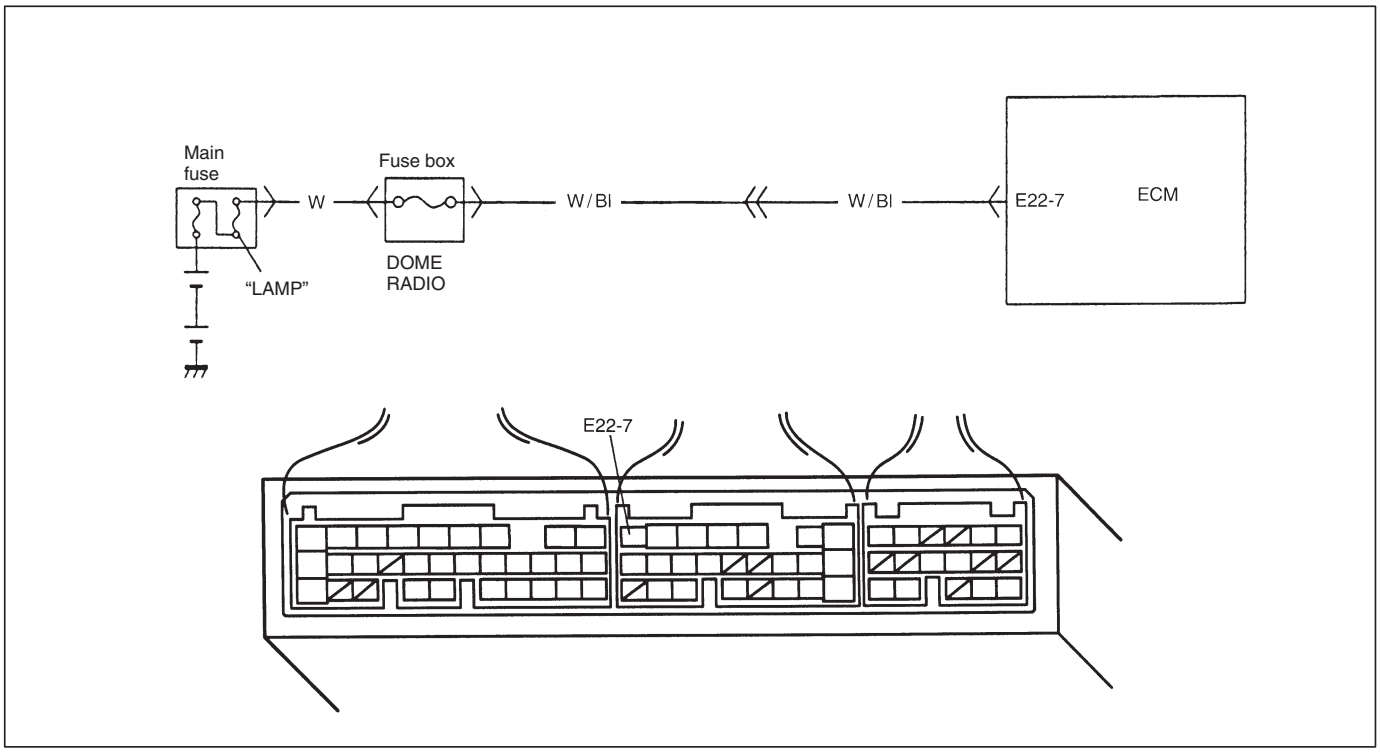

Battery voltage is supplied so that diagnostic trouble code memory, values for engine control learned by ECM, etc. are kept in ECM even when the ignition switch is turned OFF.

DTC DETECTING CONDITION	POSSIBLE CAUSE
● Low voltage at terminal E22-7 after starting engine.	● "W/Bl" circuit open ● ECM malfunction

DTC CONFIRMATION PROCEDURE

1) Clear DTC, start engine and run it at idle for 1 min.
2) Select "DTC" mode on scan tool and check DTC.

INSPECTION

STEP	ACTION	YES	NO
1	Check for voltage at terminal E22-7 of ECM connector connected, under each condition, ignition switch OFF and engine running. Is it 10 – 14 V at each condition?	Poor E22-7 connection or intermittent trouble. Check for intermittent referring to "Intermittent and Poor Connection" in Section 0A. If wire and connections are OK, substitute a known- good ECM and recheck.	"W/Bl" circuit open.

DTC P1600 SERIAL COMMUNICATION PROBLEM BETWEEN ECM AND TCM

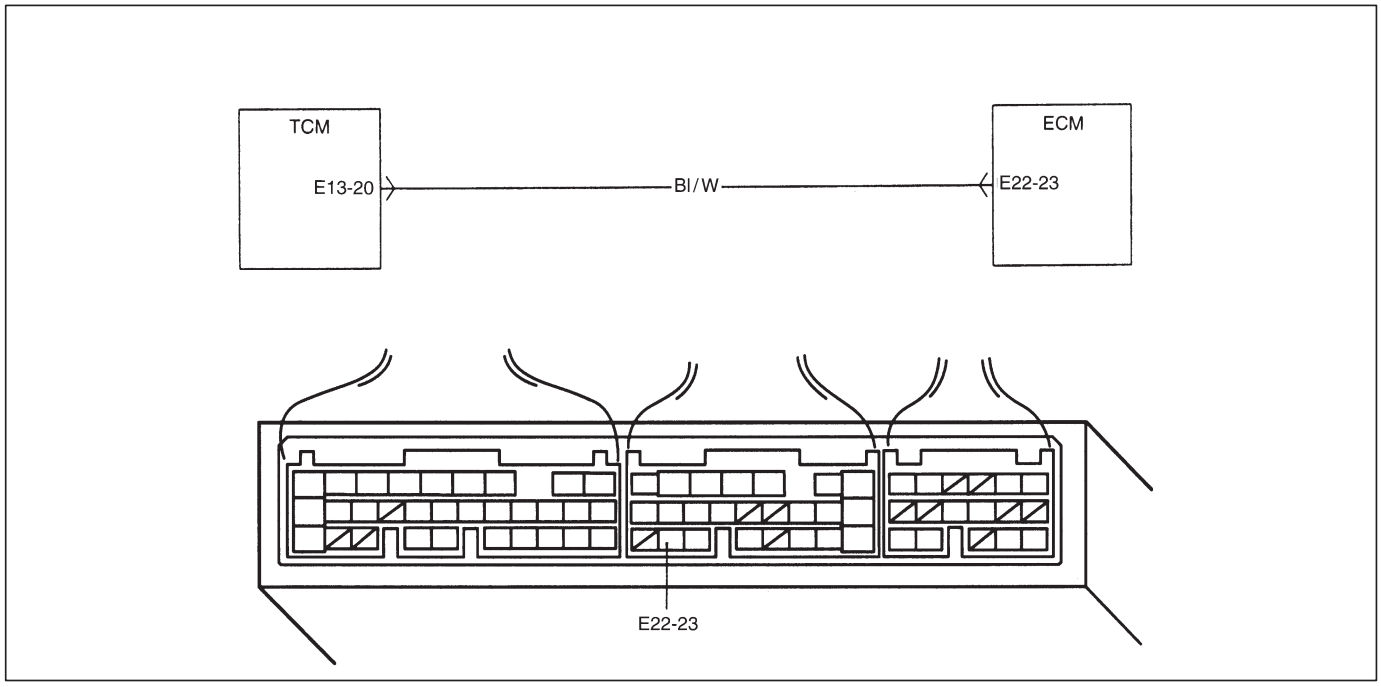

CIRCUIT DESCRIPTION

The serial data line is pulled up to about 12 V by ECM and TCM transmits information to ECM through it by controlling its grounding.

TCM constantly sends information while ignition switch is ON as to whether judgement was made or not with respect to all detectable DTCs as well as whether or not abnormality exists after judgement.

DTC DETECTING CONDITION	POSSIBLE CAUSE
No signal inputted from TCM to ECM or check sum error while engine running	● "Bl/W" circuit open or short ● TCM power or ground circuit open. ● TCM malfunction ● ECM malfunction

DTC CONFIRMATION PROCEDURE

1) Turn ignition switch OFF.
2) Clear DTC with ignition switch ON.
3) Start engine and run it at idle for 1 min.
4) Select "DTC" mode on scan tool and check DTC.

DTC P1600

INSPECTION

STEP	ACTION	YES	NO
1	Was “ENGINE DIAG. FLOW TABLE” performed?	Go to Step 2.	Go to “ENGINE DIAG. FLOW TABLE”.
2	Check signal voltage. Check voltage between terminal E22-23 and body ground with ignition switch ON. Does it change between 0 – 12 V? See Fig. 1.	Intermittent trouble or faulty ECM or TCM. Check for intermittent trouble referring to “Intermittent and poor connection” in Section 0A.	Go to Step 3.
3	Is it about 12 V at Step 2?	“Bl/W” wire open, poor E13-20 connection or TCM power or ground circuit open. If wires and connections are OK, substitute a known-good TCM and recheck.	Go to Step 4.
4	Check signal circuit. 1) Disconnect TCM coupler with ignition switch OFF. 2) Check voltage between E13-20 terminal and body ground with ignition switch ON. See Fig. 2. Is it about 12 V?	Check TCM power and ground circuit for open. If OK, substitute a known-good TCM and recheck.	“Bl/W” wire shorted to ground or poor E22-23 terminal connection. If wire and connection are OK, substitute a known-good ECM and recheck.

Fig. 1 for Step 1

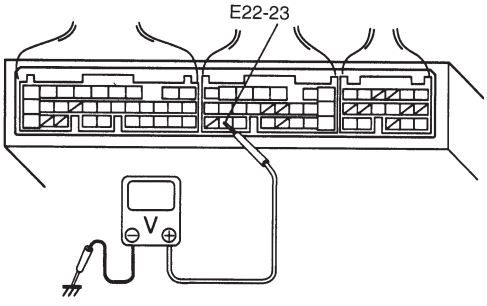

Fig. 2 for Step 4

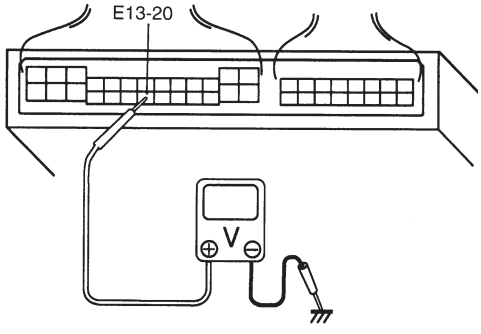

DTC P1717 A/T DRIVE RANGE (PARK/NEUTRAL POSITION) SIGNAL CIRCUIT MALFUNCTION

CIRCUIT DESCRIPTION

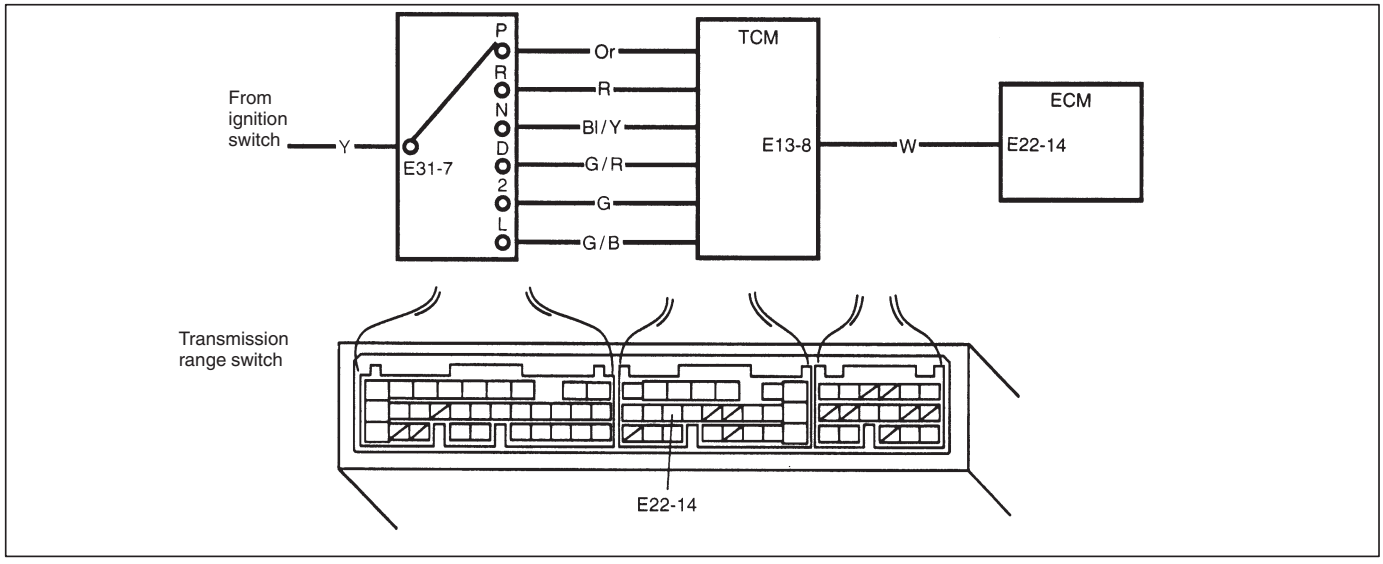

DTC DETECTING CONDITION	POSSIBLE CAUSE
● "D" range signal not inputted (Park/Neutral position signal inputted) to ECM while vehicle running 2 driving cycle detection logic, Continuous monitoring.	● "W" circuit open ● Transmission range switch malfunction ● "R", "D", "2" or "L" range signal circuit open ● TCM power or ground circuit open ● TCM malfunction ● ECM malfunction

DTC CONFIRMATION PROCEDURE

WARNING:
- **When performing a road test, select a place where there is no traffic or possibility of a traffic accident and be very careful during testing to avoid occurrence of an accident.**
- **Road test should be carried out with 2 persons, a driver and a tester.**

1) Turn ignition switch OFF.
2) Clear DTC with ignition switch ON.
3) Start engine and shift selector lever to "D" range.
4) Increase vehicle speed to higher than 20 mph, 32 km/h and then stop vehicle.
5) Repeat above step 4) 9 times.
6) Shift selector lever to "2" range and repeat above step 4) and 5).
7) Shift selector lever to "L" range and repeat above step 4) and 5).
8) Check DTC in "DTC" mode and pending DTC in "ON BOARD TEST" or "PENDING DTC" mode.

DTC P1717

INSPECTION

STEP	ACTION	YES	NO
1	Was “ENGINE DIAG. FLOW TABLE” performed?	Go to Step 2.	Go to “ENGINE DIAG. FLOW TABLE”.
2	Check PNP signal (“D” range signal). When using SUZUKI scan tool: 1) Connect SUZUKI scan tool to DLC with ignition switch OFF. See Fig. 1. 2) Turn ignition switch ON and check PNP signal (“P/N” or “D” range) on display when shifting selector lever to each range. When not using SUZUKI scan tool: 1) Turn ignition switch ON. 2) Check voltage at terminal E22-14 of ECM connector connected. See Fig. 2. Is “D” range on display (Is 0 – 1 V indicated) no matter which of “R”, “D”, “2” and “L” range positions selector lever may be at? See Fig. 3.	Intermittent trouble or faulty ECM. Check for intermittent referring to “Intermittent and poor connection” in Section 0A.	Go to Step 3.
3	Is “P/N” range on display (Is 10 – 14 V indicated) when selector lever is at one of “R”, “D”, “2” and “L” range positions only? See Fig. 3.	Check transmission range switch and circuits referring to section 7B.	Go to Step 4.
4	Check PNP signal circuit. 1) Turn ignition switch OFF. 2) Disconnect TCM connectors. 3) Check for proper connection to TCM at terminal E13-8. 4) If OK, then check voltage at terminal E13-8 in TCM connector disconnected, with ignition switch ON. Is it 10 – 14 V? See Fig. 4	“Y” circuit open, poor E31-7 connection, select cable maladjusted, transmission range sensor maladjusted or transmission range sensor malfunction. If all above are OK, substitute a known-good TCM and recheck.	“W” circuit open or poor E22-14 connection. If wire and connection are OK, substitute a known-good ECM and recheck.

Fig. 1 for Step 2

When using SUZUKI scan tool:

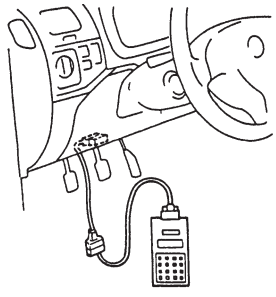

Fig. 2 for Step 2

When not using SUZUKI scan tool:

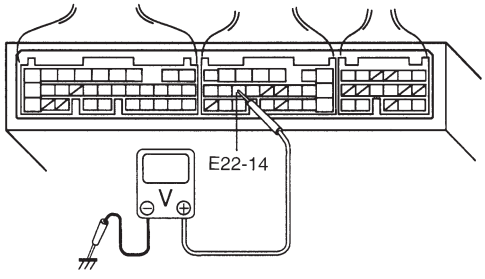

Fig. 3 for Step 2 and 3

Scan tool or voltmeter / Slector lever position	SUZUKI SCAN TOOL DISPLAY	VOLTAGE AT E22-14
“P” and “N” range	P/N range	10 – 14V
“R”, “D”, “2” and “L” range	D range	0 – 1V

Fig. 4 for Step 4

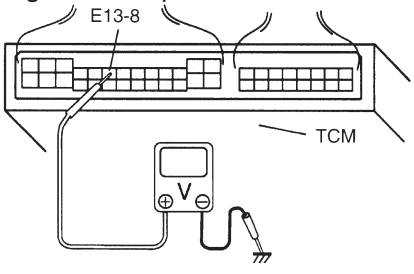

TABLE B-1 FUEL INJECTOR CIRCUIT CHECK

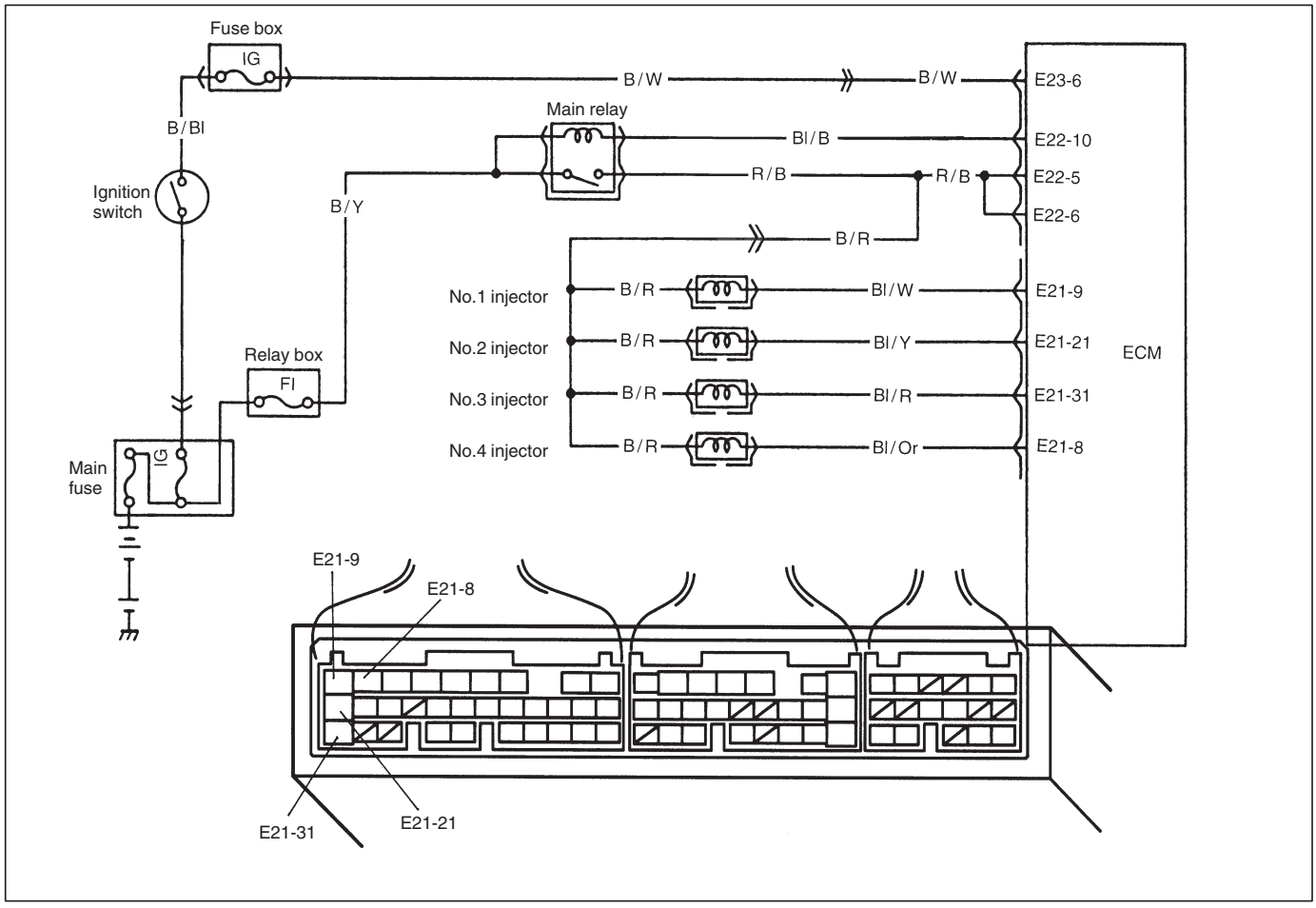

INSPECTION

STEP	ACTION	YES	NO
1	Was “ENGINE DIAG. FLOW TABLE” performed?	Go to Step 2.	Go to “ENGINE DIAG. FLOW TABLE”.
2	Check Injector for Operating Sound. Using sound scope, check each injector for operating sound at engine cranking. Do all 4 injectors make operating sound?	Fuel injector circuit is in good condition.	Go to Step 3.
3	Dose none of 4 injectors make operating sound at Step 2?	Go to Step 4.	Check coupler connection and wire harness of injector not making operating sound and injector itself (Refer to Section 6E).
4	Check power circuit of injectors for open and short. Is it normal?	Check all 4 injectors for resistance respectively. If resistance is OK, substitute a known-good ECM and recheck.	Power circuit open or short.

TABLE B-2 FUEL PUMP AND ITS CIRCUIT CHECK

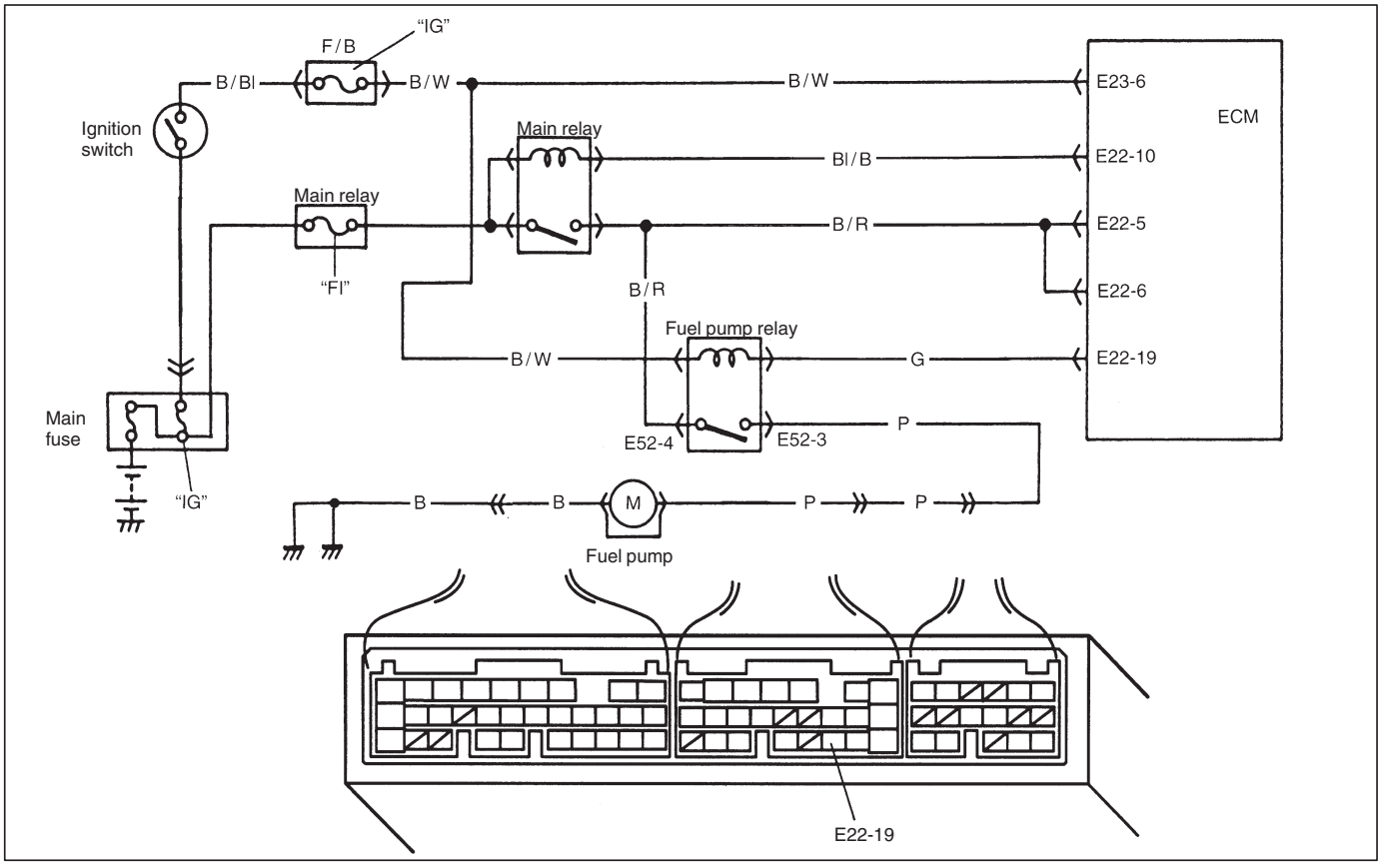

INSPECTION

STEP	ACTION	YES	NO
1	Was "ENGINE DIAG. FLOW TABLE" performed?	Go to Step 2.	Go to "ENGINE DIAG. FLOW TABLE".
2	Check Fuel Pump Control System for Operation. See Fig. 1. Is fuel pump heard to operate for 2 sec. after ignition switch ON?	Fuel pump circuit is in good condition.	Go to Step 3.
3	Check Fuel Pump for Operation. 1) Remove fuel pump relay from relay box with ignition switch OFF. 2) Check for proper connection to relay at each terminals. 3) If OK, using service wire, connect terminals E52-3 and E52-4 of relay connector. See Fig. 2. **CAUTION: Check to make sure that connection is made between correct terminals. Wrong connection can cause damage to ECM, wire harness, etc.** Is fuel pump heard to operate at ignition switch ON?	Go to Step 4.	"P", "B" or "B/R" circuit open or fuel pump malfunction.
4	Check Fuel Pump Relay for Operation. 1) Check resistance between each two terminals of fuel pump relay. See Fig.3. Between terminals "c" and "d": Infinity Between terminals "a" and "b": 100 – 150 Ω 2) Check that there is continuity between terminals "c" and "d" when battery is connected to terminals "a" and "b". See Fig. 3. Is fuel pump relay in good condition?	"G" circuit open or poor E22-19 connection. If wire and connection are OK, substitute a known-good ECM and recheck.	Replace fuel pump relay.

Fig. 1 for Step 2

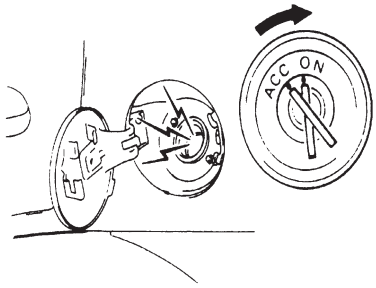

Fig. 2 for Step 3

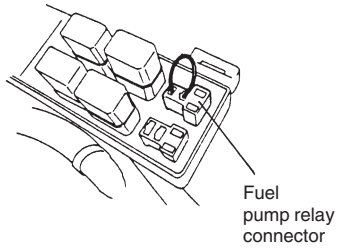

Fig. 3 for Step 4

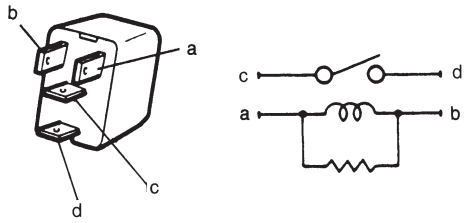

TABLE B-3 FUEL PRESSURE CHECK

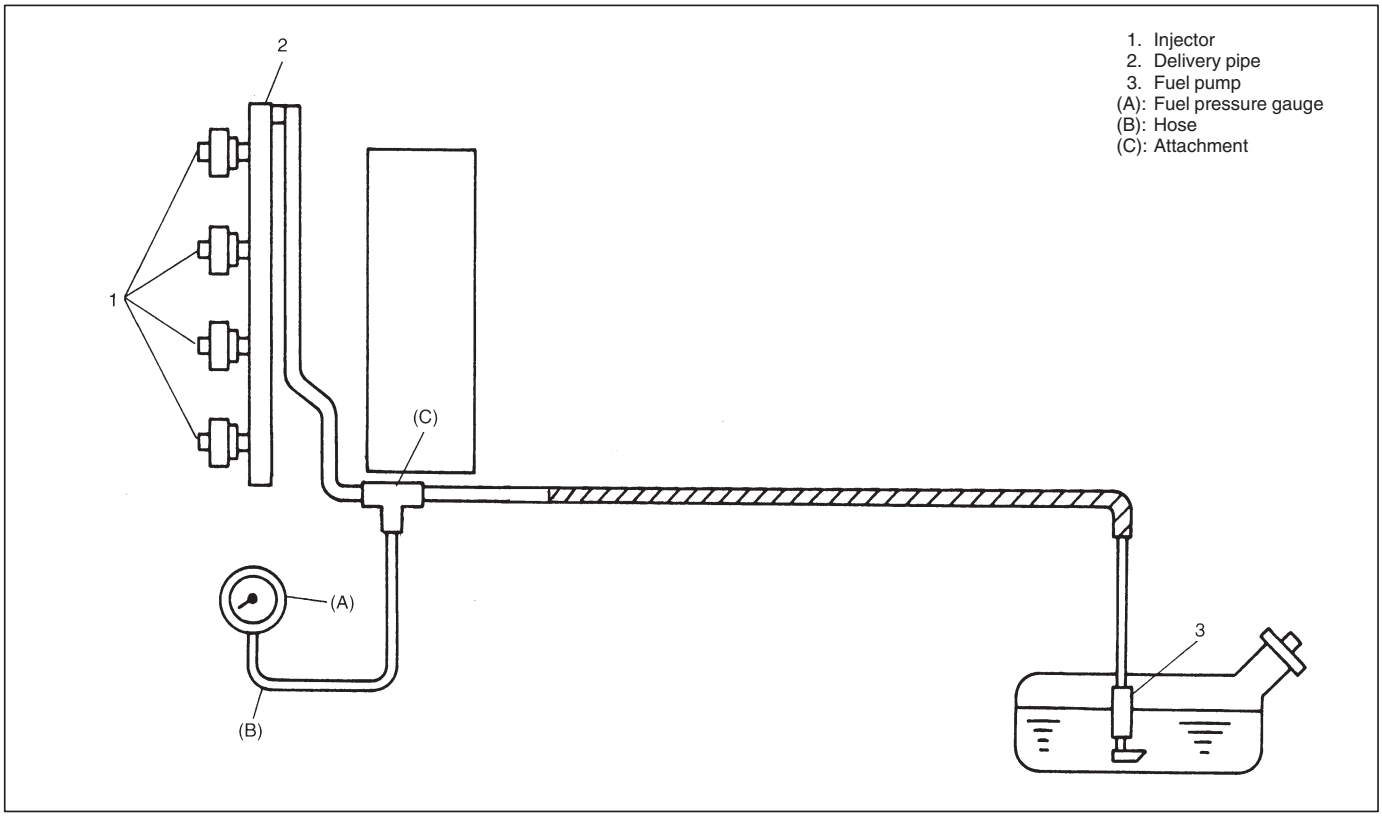

INSPECTION

STEP	ACTION	YES	NO
1	Check Fuel Pressure (Refer to Section 6E for details). 1) Release fuel pressure from fuel feed line. 2) Install fuel pressure gauge. 3) Check fuel pressure by repeating ignition switch ON and OFF. See Fig. 1. Is fuel pressure within 270 – 310 kPa (2.7 – 3.1 kg/cm^2, 38.4 – 44.0 psi)?	Go to Step 2.	Go to Step 4.
2	Is 250 kPa (2.5 kg/cm^2, 35.6 psi) or higher fuel pressure retained for 1 minute after fuel pump is stopped at Step 1?	Normal fuel pressure.	Go to Step 3.
3	Is there fuel leakage from fuel feed line hose, pipe or their joint?	Fuel leakage from hose, pipe or joint.	Faulty fuel pressure regulator.
4	Was fuel pressure higher than spec. in Step 1?	Faulty fuel pressure regulator.	Clogged fuel filter, faulty fuel pressure regulator, Restricted fuel feed hose or pipe, Faulty fuel pump or Fuel leakage from hose connection in fuel tank.

Fig. 1 for Step 1

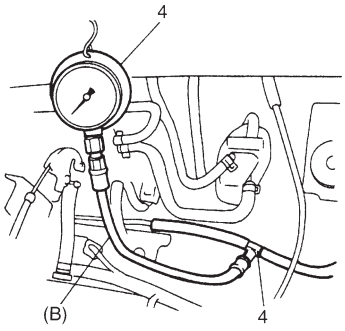

4. Fuel pressure gauge & 3way joint

TABLE B-4 IDLE AIR CONTROL SYSTEM CHECK

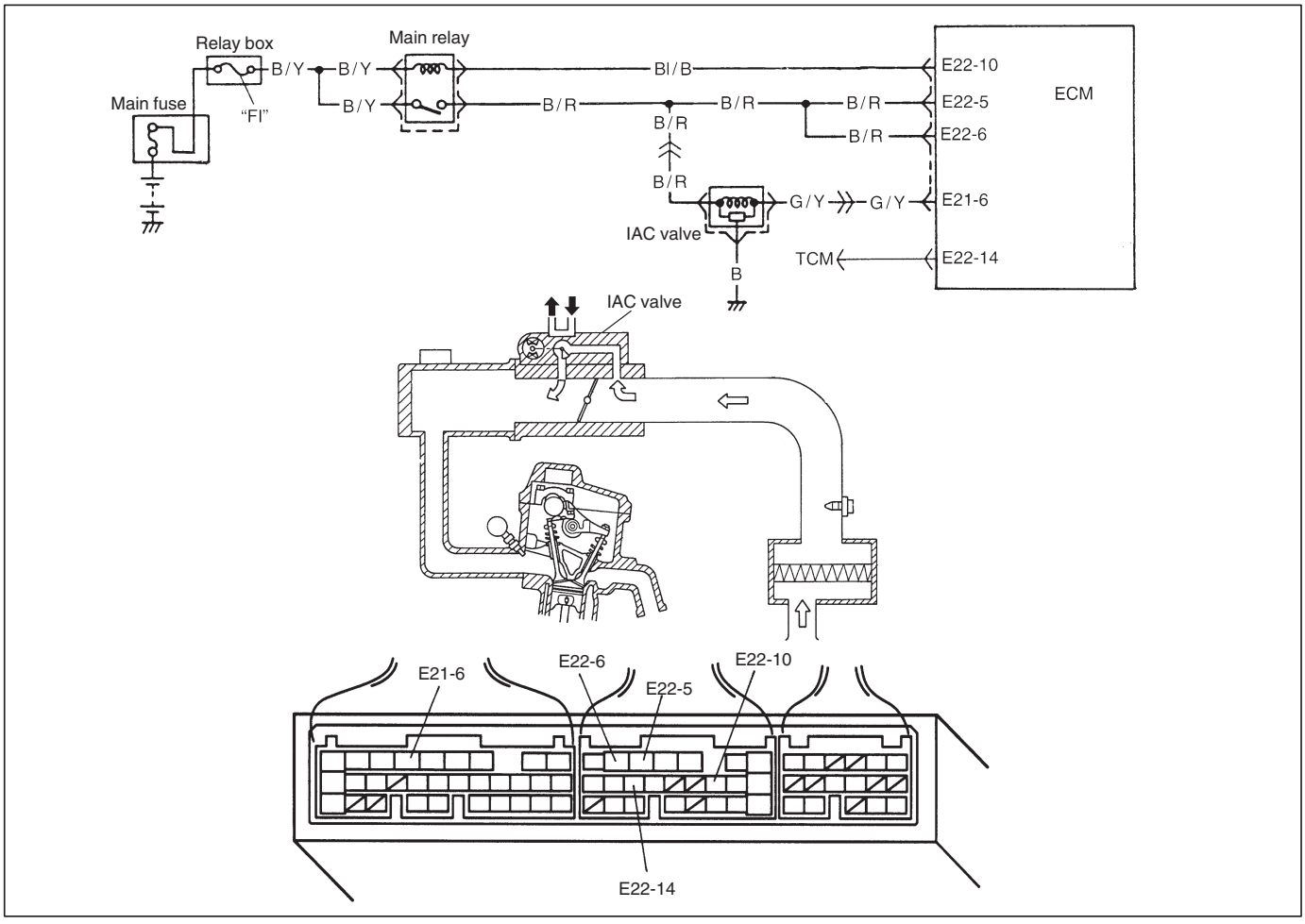

INSPECTION

STEP	ACTION	YES	NO
1	Check engine idle speed and IAC duty referring to "Idle Speed/IAC Duty Inspection" in Section 6E. Is idle speed within specification?	Go to Step 2.	Go to Step 4.
2	Is IAC duty within specification in Step 1?	Go to Step 3.	Check for followings: – Vacuum leak – EVAP canister purge control system – Clog of IAC air passage – Accessory engine load – Closed throttle position (TP sensor) – Stuck of PCV valve
3	Is engine idle speed kept specified speed even with headlight ON?	System is in good condition.	Check IAC system for operation referring to Step 2 of DTC P0505 Diag. Flow Table.
4	Was idle speed higher than specification in Step 1?	Go to Step 5.	Go to Step 8.
5	Check A/C (input) signal circuit referring to Step 1 of Table B-5 A/C Signal Circuit Check, if equipped. (A/C signal can be also checked by using SUZUKI scan tool.) Is it in good condition?	Go to Step 6.	Repair or replace A/C signal circuit or A/C system.

STEP	ACTION	YES	NO
6	Check IAC system referring to Step 2 of DTC P0505 Diag. Flow Table. Is check result satisfactory?	Go to Step 7.	Go to Step 3 of DTC P0505 Diag. Flow Table.
7	Was IAC duty less than about 3% (or more than about 97% for OFF duty meter) in Step 1 of this table?	Check abnormal air inhaling from air intake system, PCV valve and EVAP canister purge control system.	Check TP sensor (closed throttle position) and ECT sensor for performance. If sensors are OK, substitute a known-good ECM.
8	Check PNP signal (“D” range signal). When using SUZUKI scan tool: 1) Connect SUZUKI scan tool to DLC with ignition switch OFF. See Fig. 1. 2) Turn ignition switch ON and check PNP signal (“P/N” and “D” range) on display when shifting selector lever to each range. When not using SUZUKI scan tool: 1) Turn ignition switch ON. 2) Check voltage at terminal E22-14 of ECM connector connected. See Fig. 1. Is “D” range on display (Is 0 – 1 V indicated) no matter which of “R”, “D”, “2” and “L” range positions selector lever may be at? Is “P/N” range on display (Is 10 – 14 V indicated) when selector lever is at one of “R”, “D”, “2” and “L” range position only? See Fig. 2.	Go to Step 9.	Repair or replace.
9	Check IAC system referring to Step 2 of DTC P0505 Diag. Flow Table. Is check result satisfactory?	Go to Step 10.	Go to Step 3 of DTC P0505 Diag. Flow Table.
10	Was IAC duty more than about 30% or 40% (or less than 70% or 60% for OFF duty meter) in Step 1 of this table? **NOTE:** **Duty value with ( ) are applicable to vehicle used at high altitude (higher than 2000 m or 6560 ft).**	Check parts or system which can cause engine low idle. – Accessory engine load – Clog of air passage – Etc.	Substitute a known-good ECM and recheck.

Fig. 1 for Step 8

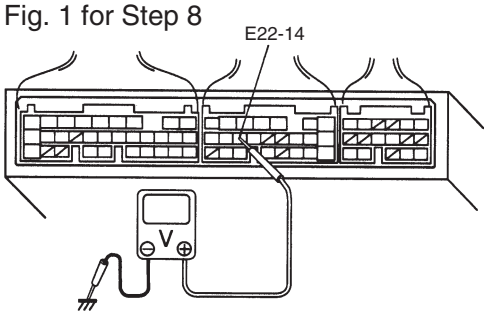

Fig. 2 for Step 8

Scan tool or voltmeter / Slector lever position	SUZUKI SCAN TOOL DISPLAY	VOLTAGE AT E92-15
“P” and “N” range	P/N range	10 – 14V
“R”, “D”, “2” and “L” range	D range	0 – 1V

TABLE B-5 A/C SIGNAL CIRCUITS CHECK (VEHICLE WITH A/C)

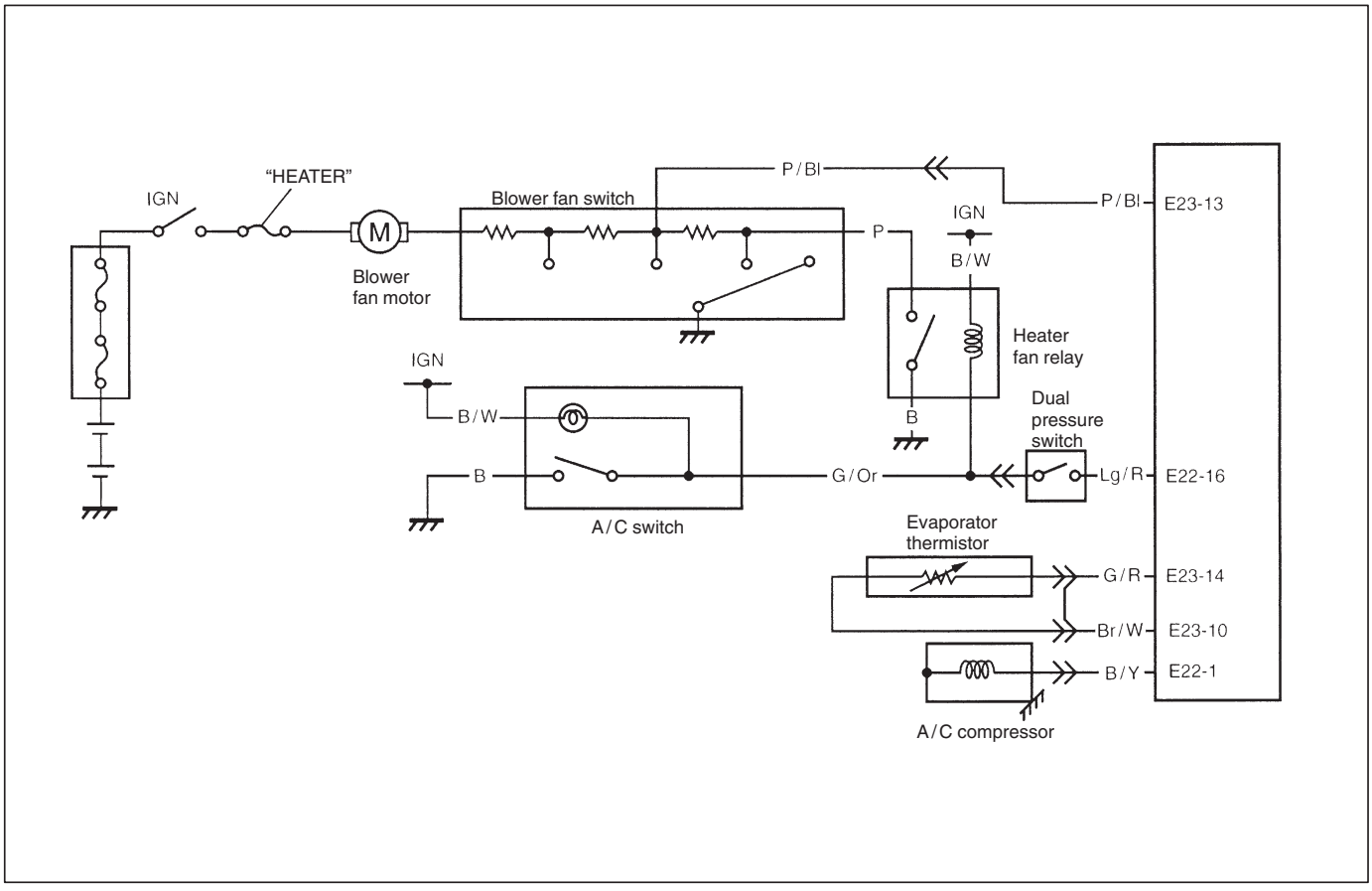

INSPECTION

STEP	ACTION	YES	NO
1	1) Disconnect ECM connectors with ignition switch at OFF position. 2) Check resistance between E23-14 terminal and E23-10 terminal. 3) Is it within specification? **Reference value. See Fig. 1.** **At 0°C 6.3 – 6.9 kΩ** **At 25°C 1.8 – 2.2 kΩ**	Go to Step 2.	Faulty A/C evaporator thermistor or its circuit.
2	1) Check voltage at E22-16 terminal under each condition given in table below. Ignition switch ON, A/C switch OFF: 10 – 14V Ignition switch ON, A/C switch ON: 0 – 1V 2) Is check result satisfactory?	Go to Step 3.	● "Lg/R" wire open or short ● Poor E22-16 terminal connection If wire and connection are OK, substitute a known-good ECM and recheck. Go to Step 3.

STEP	ACTION	YES	NO
3	1) Check voltage at E22-1 terminal under each condition given in table below. While engine running, A/C switch OFF: 0 V While engine running, A/C switch ON: 10 – 14V **NOTE:** **When A/C evaporator thermistor temp. is below 2.5°C (36.5°F), A/C remain OFF (E22-1 terminal voltage become 0 – 1 V). This condition is not abnormal.** 2) Is check result satisfactory?	A/C control system circuits are in good condition.	● "B/Y" wire open or short ● Poor E22-1 terminal connection If wire and connection are OK, substitute a known-good ECM and recheck.

Fig. for Step 1

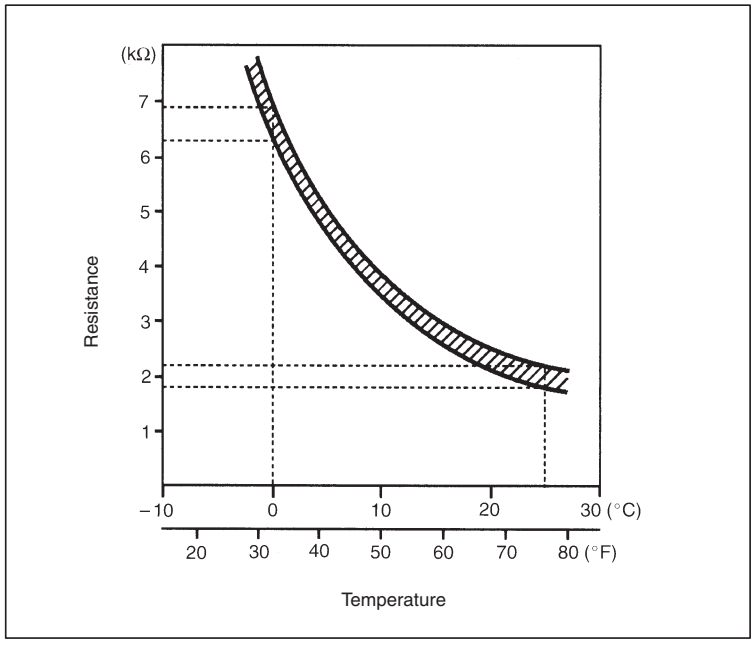

TABLE B-6 ELECTRIC LOAD SIGNAL CIRCUIT CHECK

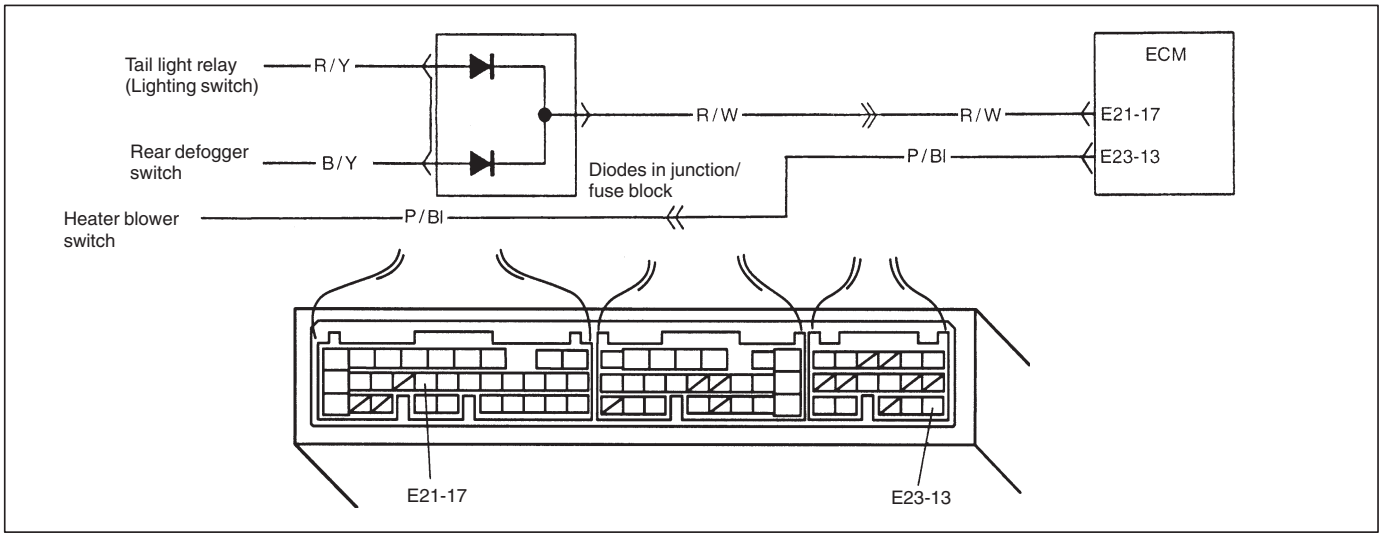

INSPECTION

STEP	ACTION	YES	NO
1	Check Electric Load Signal Circuit. When using SUZUKI scan tool: 1) Connect SUZUKI scan tool to DLC with ignition switch OFF. 2) Start engine and select “DATA LIST” mode on scan tool. 3) Check electric load signal under following each condition. See Fig. 1. Ignition switch ON, Small light, heater blower fan and rear defogger all turned OFF : OFF 0 V (E21-17) 10 – 14 V (E23-13) Ignition switch ON, Small light, heater blower fan or rear defogger turned ON : ON 10 – 14 V (E21-17) 0 V (E23-13) Is check result satisfactory? When not using SUZUKI scan tool: 1) Turn ignition switch ON. 2) Check voltage at each terminals E21-17 and E23-13 of ECM connector connected, under above each condition. See Fig. 2. Is each voltage as specified?	Electric load signal circuit is in good condition.	“R/W” and/or “P/Bl” circuit open or short, Electric load diodes malfunction or Each electric load circuit malfunction.

Fig. 1 for Step 1

When using SUZUKI scan tool:

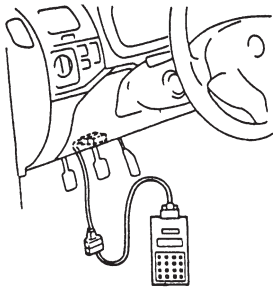

Fig. 2 for Step 1

When not using SUZUKI scan tool:

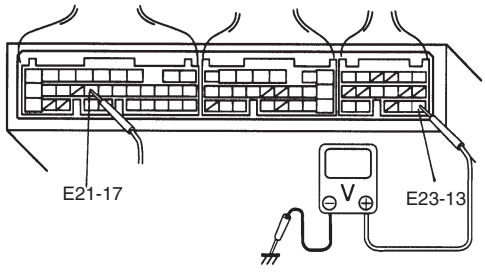

TABLE B-7 RADIATOR COOLING FAN CONTROL SYSTEM CHECK

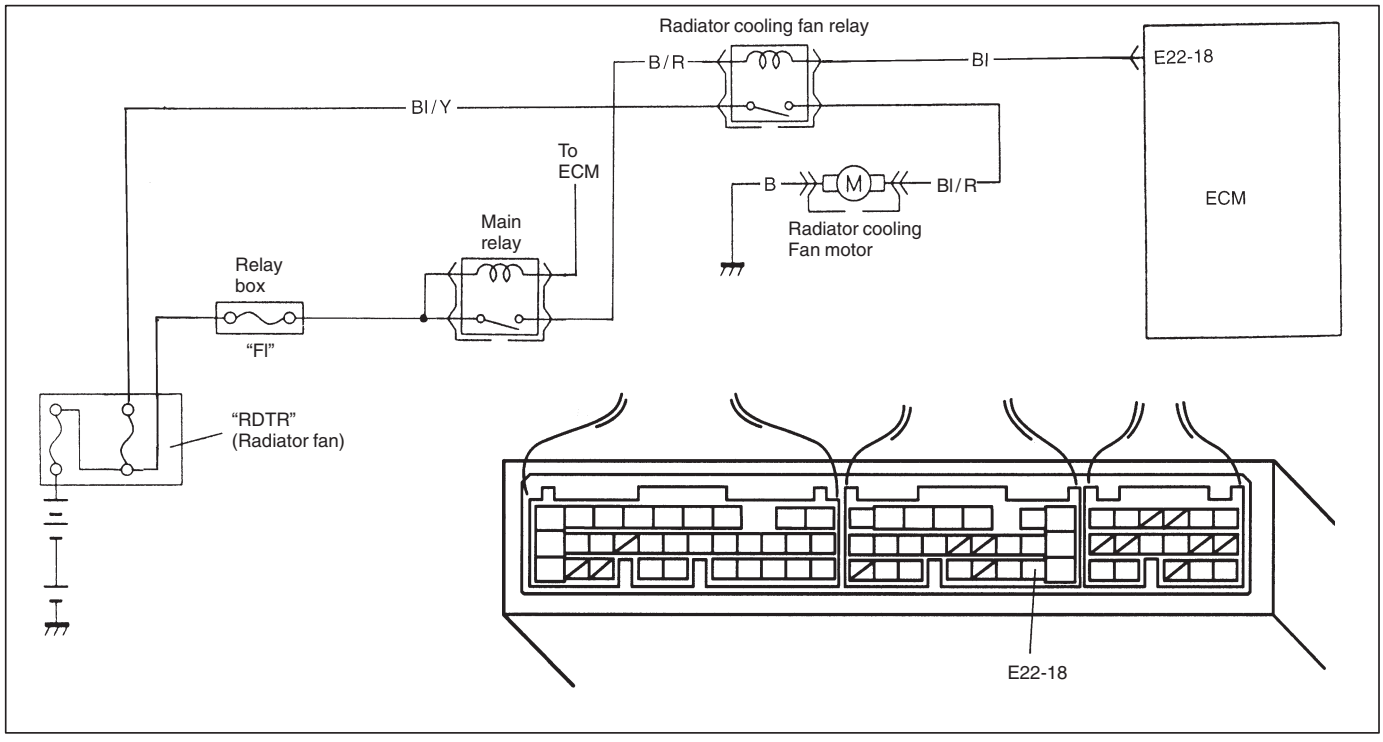

INSPECTION

STEP	ACTION	YES	NO
1	Check Fan Control System. 1) Connect scan tool to DLC with ignition switch OFF. 2) Start engine and select "DATA LIST" mode on scan tool. 3) Warm up engine until coolant temp. is 97.5°C, 208°F or higher and A/C switch turn OFF. (If engine coolant temp. does not rise, check engine cooling system or ECT sensor.) See Fig. 1. Is radiator cooling fan started when engine coolant temp. reached above temp.?	Radiator cooling fan control system is in good condition.	Go to Step 2.
2	Check Radiator Cooling Fan Relay and Its Circuit. 1) Check DTC and pending DTC with scan tool. Is DTC P0480 displayed?	Go to DTC P0480 Diag. Flow Table.	Go to Step 3.
3	Check Radiator Cooling Fan Relay. 1) Turn ignition switch OFF and remove radiator cooling fan relay. 2) Check for proper connection to relay at terminals "c" and "d". 3) If OK, check that there is continuity between "c" and "d" when battery is connected to terminals "a" and "b". See Fig. 2. Is check result satisfactory?	Go to Step 4.	Replace radiator fan relay.
4	Check Radiator Cooling Fan. 1) Turn ignition switch OFF. 2) Disconnect cooling fan motor connector. 3) Check for proper connection to motor at "Bl/R" and "B" terminals. 4) If OK, connect battery to motor and check for operation. See Fig. 3. Is it in good condition?	"Bl/Y", "Bl/R" or "B" circuit open.	Replace radiator cooling fan motor.

Fig. 1 for Step 1

When using SUZUKI scan tool:

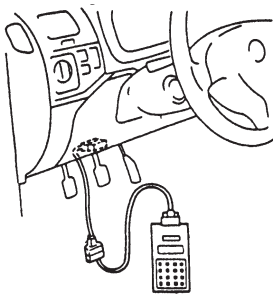

Fig. 2 for Step 3

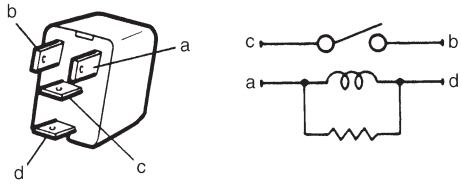

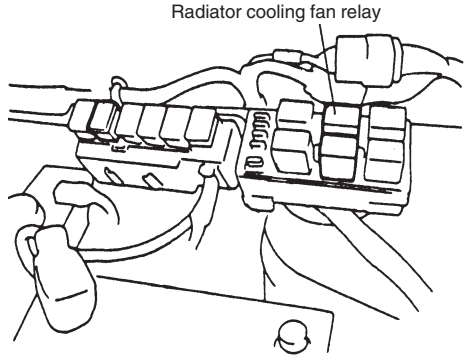

Fig. 3 for Step 4

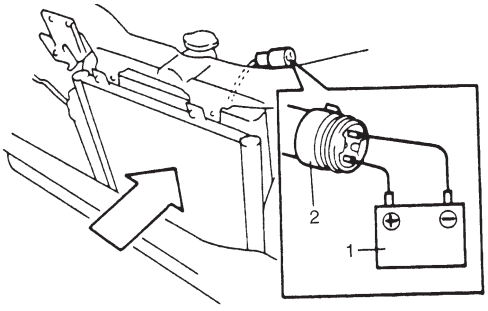

SPECIAL TOOLS

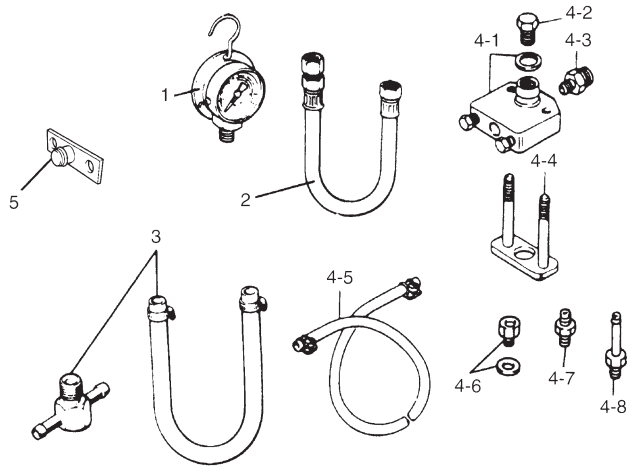

1. Pressure gauge
   09912-58441
2. Pressure hose
   09912-58431
3. 3-way joint & hose
   09912-58490
4. Checking tool set
   09912-58421

4-1. Tool body & washer
4-2. Body plug
4-3. Body attachment-1
4-4. Holder
4-5. Return hose & clamp
4-6. Body attachment-2 & washer
4-7. Hose attachment-1
4-8. Hose attachment-2

5. Checking tool plate
   09912-57610

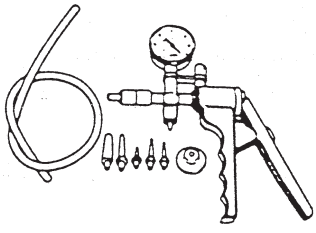

09917-47910
Vacuum pump gauge

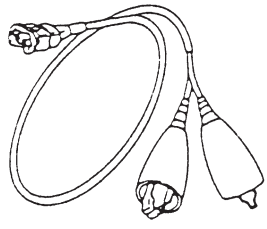

09930-88530
Injector test lead

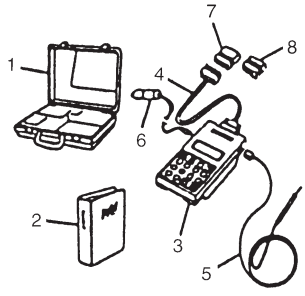

1. Storage case
2. Operator's manual
3. Tech 1 A
4. DLC cable (14/26 pin, 09931-76040)
5. Test lead/probe
6. Power source cable
7. DLC cable adaptor
8. Self-test adaptor

09931-76011
SUZUKI scan tool (Tech 1 A) kit

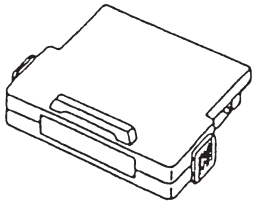

Mass storage cartridge

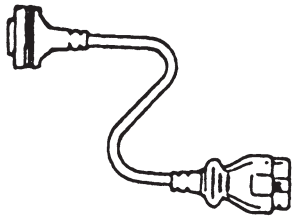

09931-76030
16/14 pin DLC cable

SECTION 6A1

ENGINE MECHANICAL

WARNING:
For vehicles equipped with Supplemental Restraint (Air Bag) System:
- **Service on and around the air bag system components or wiring must be performed only by an authorized SUZUKI dealer. Refer to "Air Bag System Components and Wiring Location View" under "General Description" in air bag system section in order to confirm whether you are performing service on or near the air bag system components or wiring. Please observe all WARNINGS and "Service Precautions" under "On-Vehicle Service" in air bag system section before performing service on or around the air bag system components or wiring. Failure to follow WARNINGS could result in unintentional activation of the system or could render the system inoperative. Either of these two conditions may result in severe injury.**
- **Technical service work must be started at least 90 seconds after the ignition switch is turned to the "LOCK" position and the negative cable is disconnected from the battery. Otherwise, the system may be activated by reserve energy in the Sensing and Diagnostic Module (SDM).**

NOTE:
Whether following systems (parts) are used in the particular vehicle or not depends on specifications. Be sure to bear this in mind when performing service work.
- **EGR control system (EGR valve, pressure transducer, solenoid vacuum valve and etc.).**
- **EVAP canister and vacuum hoses.**
- **EVAP canister purge valve.**
- **Oxygen sensor or CO adjusting resistor.**

CONTENTS

GENERAL DESCRIPTION

ENGINE

The engine is a water-cooled, in line 4 cylinders, 4 stroke cycle gasoline unit with its S.O.H.C. (Single Overhead Camshaft) valve mechanism arranged for “V”-type valve configuration and 16 valves (IN2 and EX2/one cylinder).

The single overhead camshaft is mounted over the cylinder head; it is driven from crankshaft through timing belt, and no push rods are provided in the valve train system.

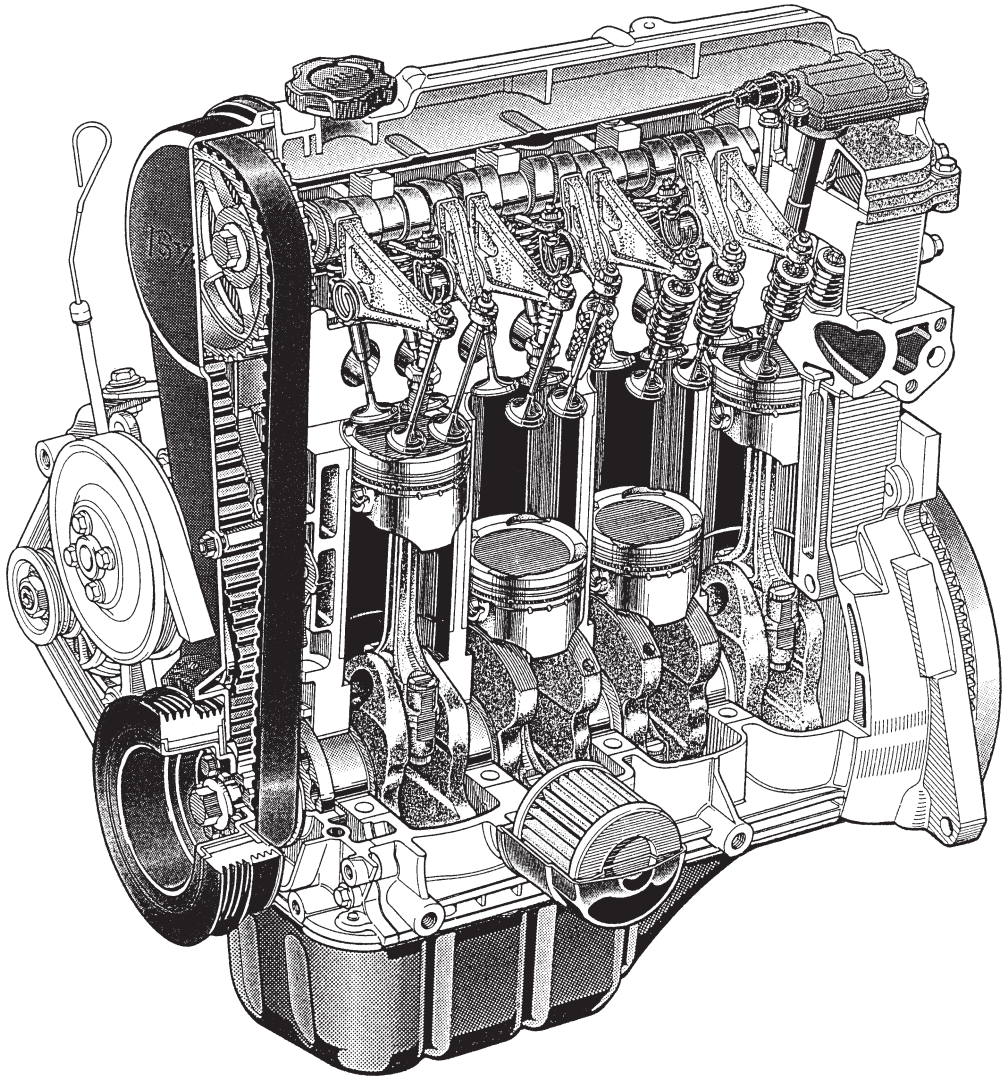

ENGINE LUBRICATION

The oil pump is of a trochoid type, and mounted on crankshaft at crankshaft pulley side.
Oil is drawn up through oil pump strainer and passed through pump to oil filter.
The filtered oil flows into two paths in cylinder block. In one path, oil reaches crankshaft journal bearings. Oil from crankshaft journal bearings is supplied to connecting rod bearings by means of intersecting passages drilled in crankshaft, and then injected from a small hole provided on big end of connecting rod to lubricate piston, rings, and cylinder wall.

In another path, oil goes up to cylinder head and lubricates camshaft journals, rocker arms, camshaft, etc., after passing through the internal oilway of rocker arm shafts.

An oil relief valve is provided on oil pump. This valve starts relieving oil pressure when the pressure comes over about 400 kPa (4.0 kg/cm^2, 56.88 psi). Relieved oil drains back to oil pan.

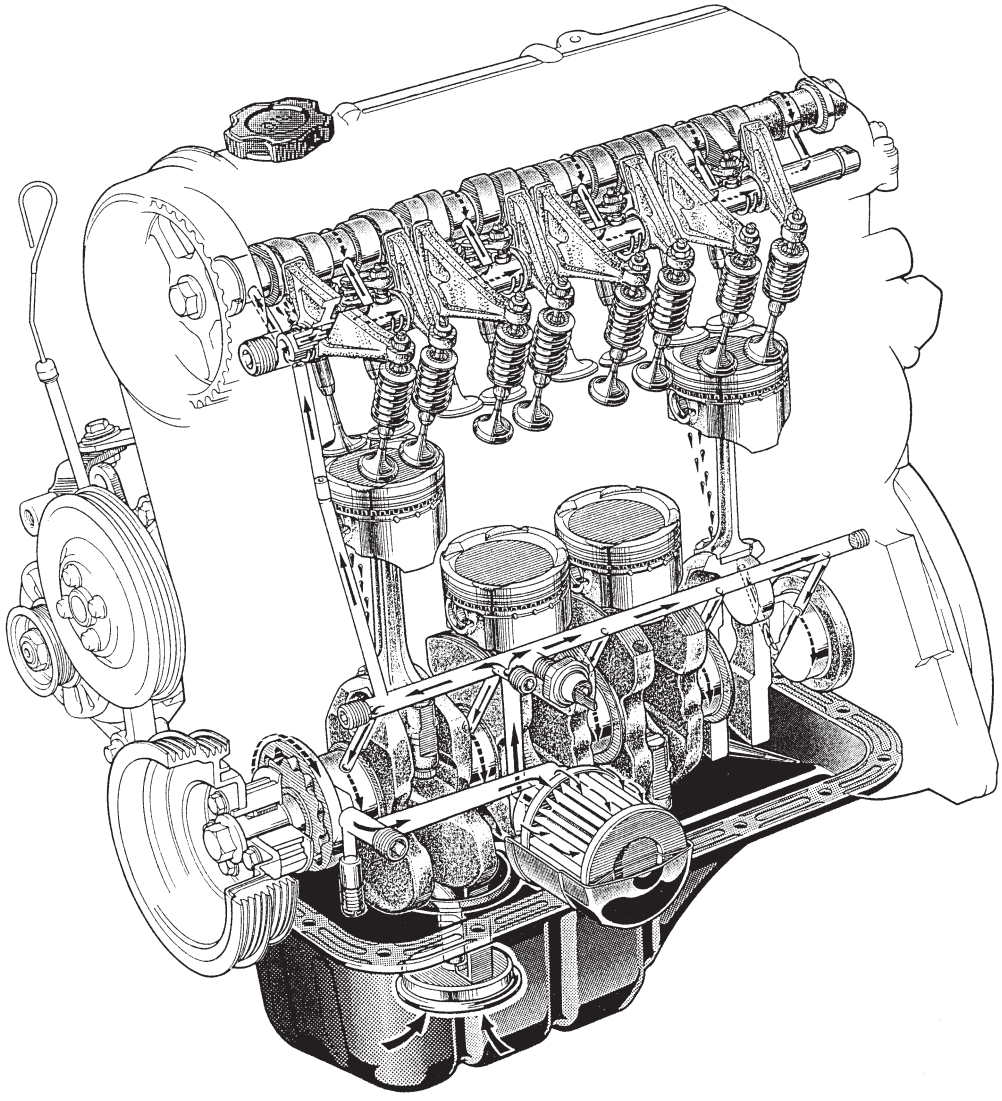

CYLINDER BLOCK

The cylinder block is made of cast aluminum alloy and has 4 cylinders arranged “In-Line”.
A cylindrical cast iron sleeve is installed in each cylinder.

CRANKSHAFT AND MAIN BEARINGS

A monoblock casting crankshaft is supported by 5 main bearings which are of precision insert type. Four crank pins on the crankshaft are positioned 180° apart.

PISTONS, RINGS, PISTON PINS AND CONNECTING RODS

The piston is cast aluminum alloy, and has two compression rings and one oil ring.
Among two compression rings (top and 2nd rings), the outer surface of the top ring is treated with nitriding for improvement in abrasion resistance.
The oil ring consists of two rails and one spacer.
The piston pin is offset 0.5 mm towards the major thrust side.
This allows a gradual change in thrust pressure against the cylinder wall as the piston travels its path.
Pins, made of chromium steel, have a floating fit in the pistons and in the connecting rods. The connecting rods are made of forged steel, and the rod bearings are of precision insert type.

CYLINDER HEAD AND VALVE TRAIN

The cylinder head is made of aluminum casting.
The supporting part of the camshaft is an independent cap type. The combustion chamber has 4 valves and uses the center plug type pent roof shape for higher intake and exhaust efficiency.
As the intake side rocker arm is end pivot type, it swings according to the camshaft movement to open and close the intake valve.
On the other hand, the exhaust side rocker arm is seesaw type. It swings with the rocker arm shaft as its supporting point and according to the camshaft movement to open and close the exhaust valve.

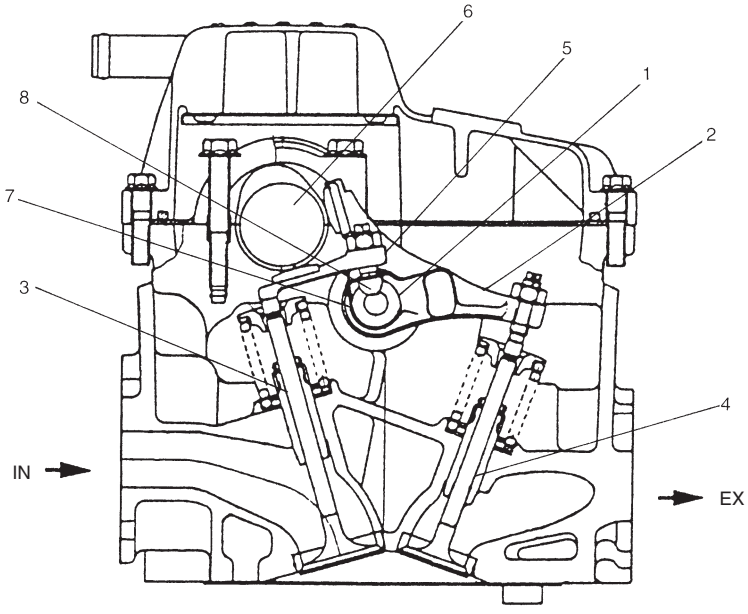

1. Rocker arm shaft
2. Rocker arm (EX)
3. Intake valve
4. Exhaust valve
5. Rocker arm (IN)
6. Camshaft
7. Clip
8. Pivot

ON-VEHICLE SERVICE

HOSE AND PIPE ROUTING

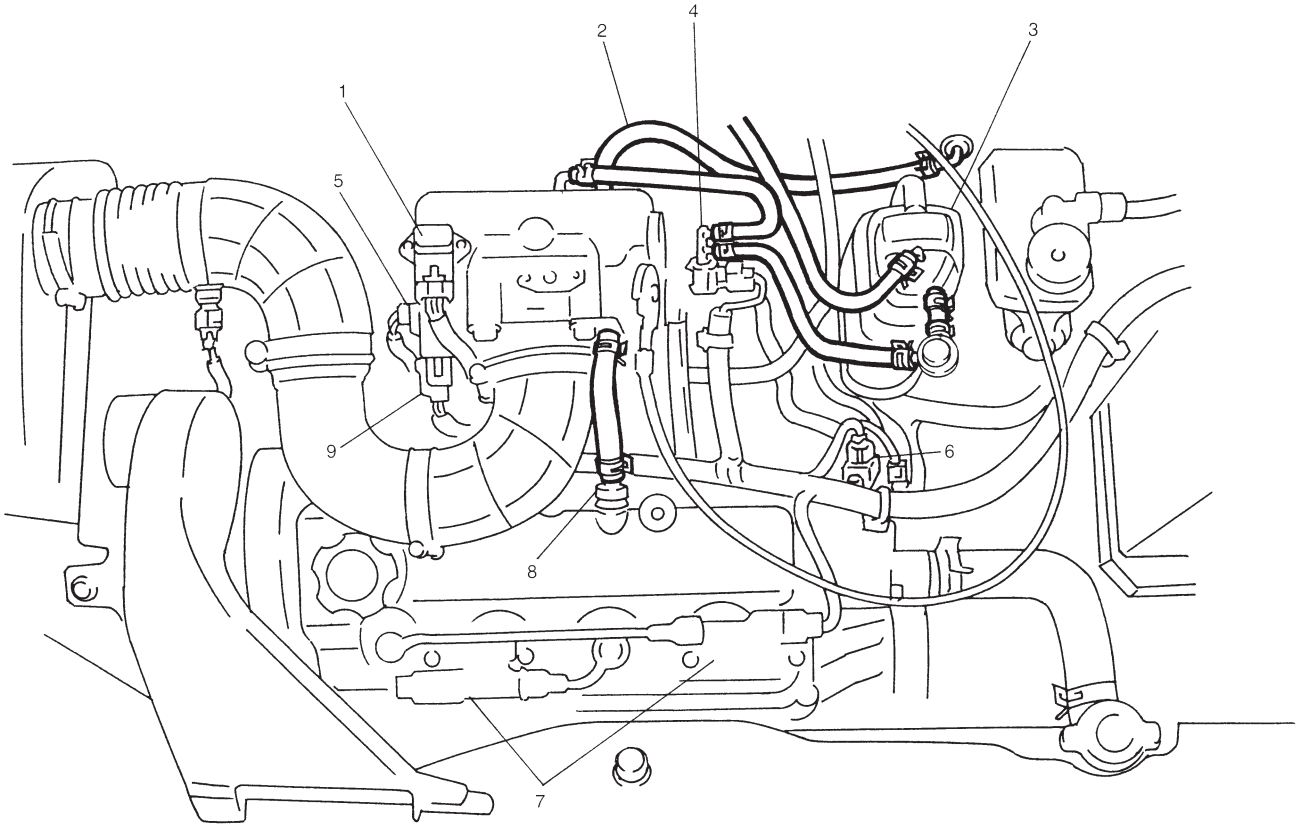

1. MAP sensor
2. Brake booster vacuum hose
3. EVAP canister
4. EVAP canister purge valve
5. TP sensor
6. CMP sensor
7. Ignition coil assembly
8. PCV valve
9. IAC valve

COMPRESSION CHECK

Check compression pressure on all four cylinders as follows:

1) Warm up engine.
2) Stop engine after warming up.

NOTE:
After warming up engine, place transmission gear shift lever in "Neutral" (shift selector lever to "P" range for A/T model), and set parking brake and block drive wheels.

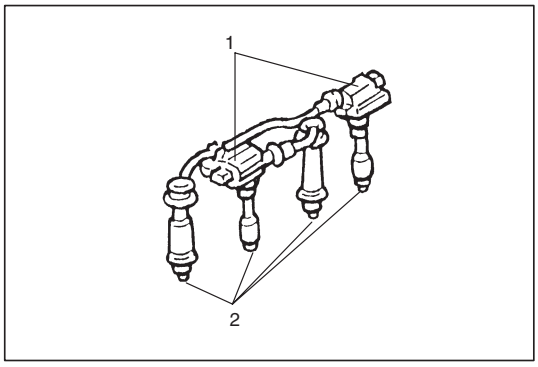

3) Remove ignition coil assemblies (1) and all spark plugs (2) referring to Section 6F.

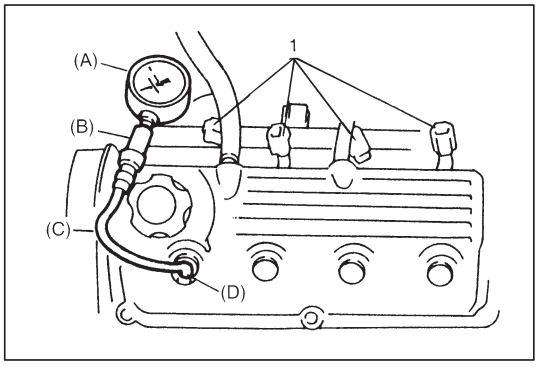

4) Disconnect fuel injector wire harness at couplers (1).
5) Install special tool (Compression gauge) into spark plug hole.

Special Tool
(A): 09915-64510-001
(B): 09915-64510-002
(C): 09915-64530
(D): 09915-67010

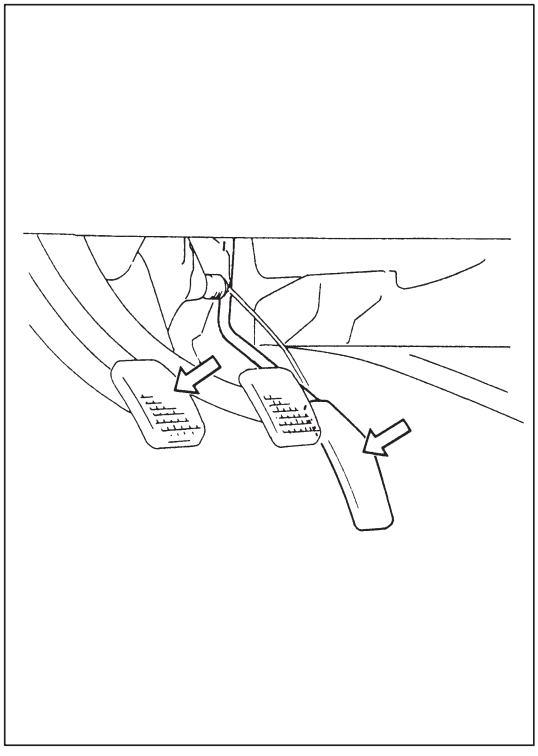

6) Disengage clutch (to lighten starting load on engine) for M/T model, and depress accelerator pedal all the way to make throttle valve full-open.
7) Crank engine with fully charged battery, and read the highest pressure on compression gauge.

NOTE:
For measuring compression pressure, crank engine at least 250 r/min. by using fully charged battery.

	Compression pressure
Standard	1400 kPa (14.0 kg/cm^2, 199.0 psi)
Limit	1100 kPa (11.0 kg/cm^2, 156.4 psi)
Max. difference between any two cylinders	100 kPa (1.0 kg/cm^2, 14.2 psi)

8) Carry out steps 5) through 7) on each cylinder to obtain four readings.
9) After checking, install spark plugs and ignition coil assemblies and connect injector wire harness connector securely.

ENGINE VACUUM CHECK

The engine vacuum that develops in the intake line is a good indicator of the condition of the engine. The vacuum checking procedure is as follows:

1) Warm up engine to normal operating temperature.

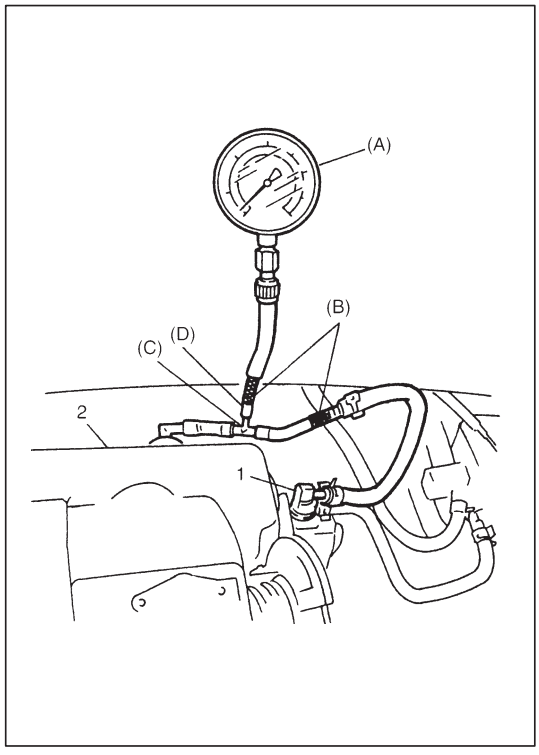

2) With engine stopped, disconnect EVAP canister purge valve (1) hose from intake manifold (2) and connect 3-way joint, hoses and special tool (vacuum gauge and joint) between intake manifold and EVAP canister purge valve (1) hose disconnected.

   Special Tool
   (A): 09915-67310
   (B): 09918-08210 x 2 pcs

   Spare Part
   (C): 09367-04002
   (D): 09355-35754-6010

3) Run engine at specified idle speed (see Section 6E1), and read vacuum gauge. Vacuum should be within following specification.

   Vacuum specification: 52.6 – 65.8 kPa (40 – 50 cm·Hg, 15.7 – 19.7 in·Hg) at specified idling speed

4) After checking, connect vacuum hoses.

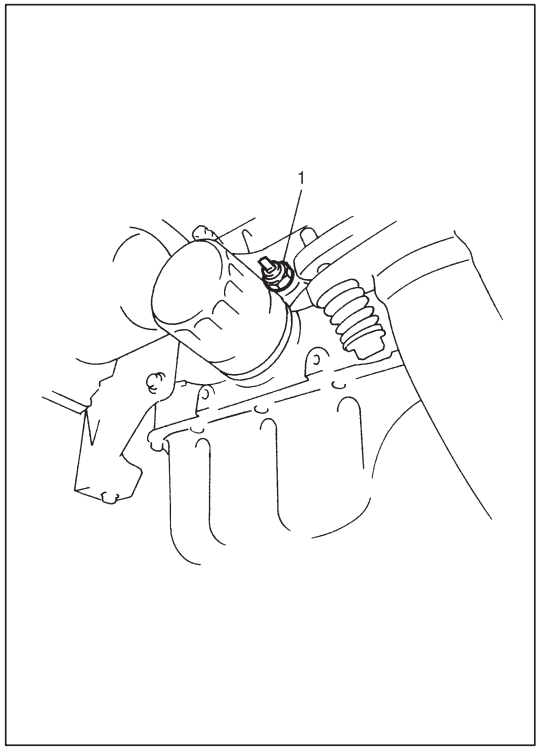

OIL PRESSURE CHECK

NOTE:
Prior to checking oil pressure, check the followings.

- **Oil level in oil pan.**
  If oil level is low, add oil up to Full level hole on oil level gauge.
- **Oil quality.**
  If oil is discolored, or deteriorated, change it.
  For particular oil to be used, refer to the table in Section 0B.
- **Oil leaks.**
  If leak is found, repair it.

1) Remove oil pressure switch (1) from cylinder block.

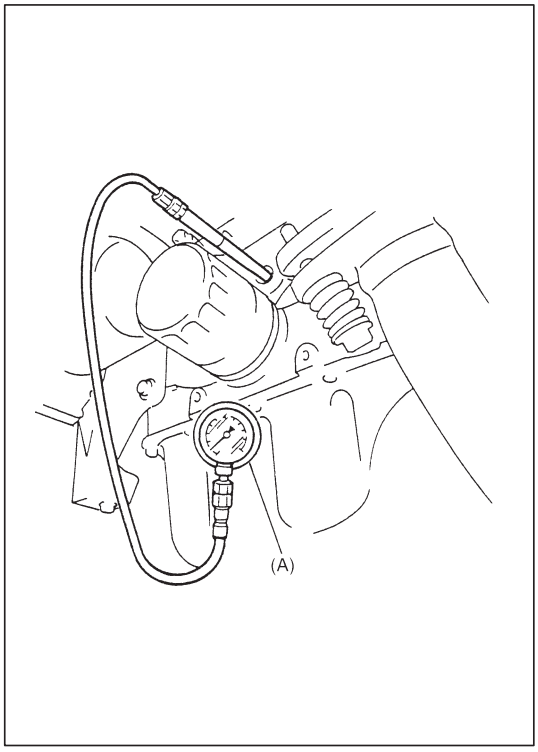

2) Install special tool (Oil pressure gauge) to vacated threaded hole.

Special Tool
(A): 09915-77310

3) Start engine and warm it up to normal operating temperature.
4) After warming up, raise engine speed to 4,000 r/min and measure oil pressure.

Oil pressure specifications: 360 – 440 kPa
(3.6 – 4.4 kg/cm^2, 51.2 – 62.6 psi)
at 3,960 – 4,040 r/min (rpm)

5) After checking oil pressure, stop engine and remove oil pressure gauge.

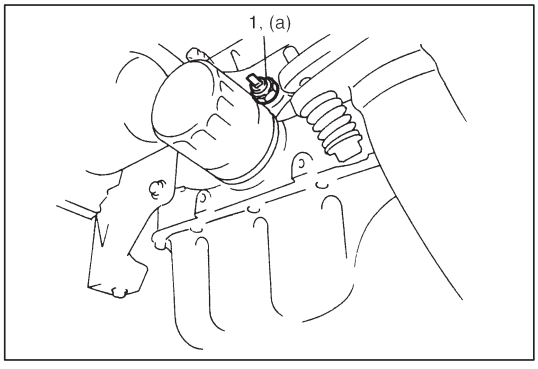

6) Before reinstalling oil pressure switch (1), be sure to wrap its screw threads with a sealing tape and tighten switch to specified torque.

NOTE:
If sealing tape edge is bulged out from screw threads of switch, cut it off.

Tightening Torque
(a): 14 N·m (1.4 kg-m, 10.5 lb-ft)

7) After installing oil pressure switch, start engine and check oil pressure switch for oil leakage.

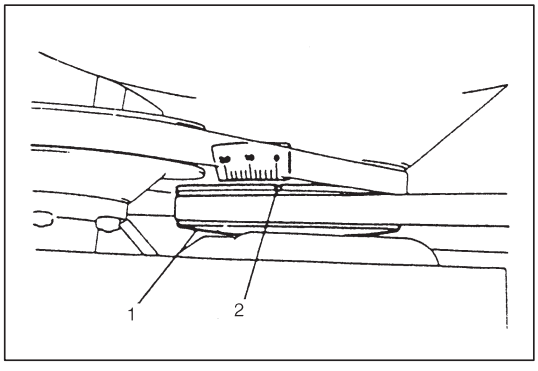

VALVE LASH (CLEARANCE)

1) Remove negative cable at battery.
2) Remove cylinder head cover referring to item “Cylinder Head Cover” in this section.
3) Remove right side of engine under cover from body.
4) Remove air cleaner assembly to observe “V” mark (2) on crankshaft pulley (1).
5) Using 17 mm socket, turn crankshaft pulley clockwise until “V” mark (in white paint) on pulley aligns with “0” (zero) calibrated on timing belt cover.

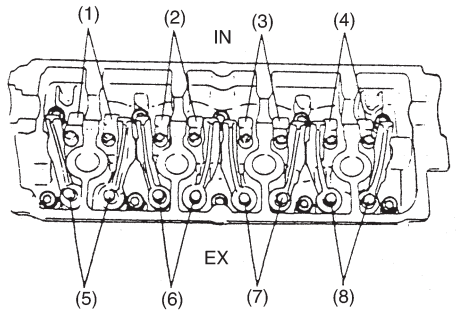

6) Check if the rocker arms of No.1 cylinder are off the respective cam lobes (of camshaft); if so, valves (1), (2), (5) and (7) in left figure are ready for clearance checking and adjustment.
Check valve lashes at valves (1), (2), (5) and (7).
If the rocker arms of No.4 cylinder are off the respective cam lobes, check valve lashes at valves (3), (4), (6) and (8).

NOTE:
When checking valve clearance, insert thickness gauge between camshaft and cam-riding face of rocker arm.

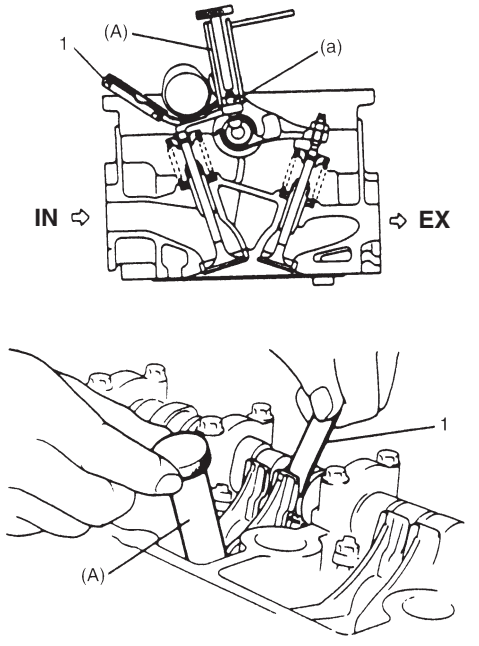

1. Thickness gauge

7) If valve lash is out of specification, adjust it to specification by turning adjusting screw after loosening lock nut.
After adjustment, tighten lock nut to specified torque while holding adjusting screw stationary, and then make sure again that valve lash is within specification.

		When cold (Coolant temperature is 15 – 25°C or 59 – 77°F)	When hot (Coolant temperature is 60 – 68°C or 140 – 154°F)
Valve clearance Specification	Intake	0.13 – 0.17 mm (0.005 – 0.007 in.)	0.17 – 0.21 mm (0.007 – 0.008 in.)
	Exhaust	0.23 – 0.27 mm (0.009 – 0.011 in.)	0.27 – 0.31 mm (0.011 – 0.012 in.)

Special Tool
(A): 09917-18210

Tightening Torque
(a): 12 N·m (1.2 kg-m, 9.0 lb-ft)

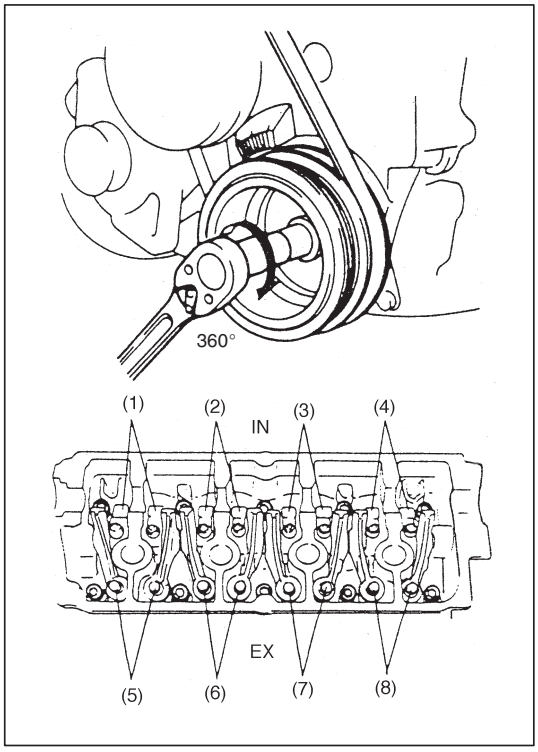

8) After checking and adjusting valve lashes at valves (1), (2), (5) and (7), (or (3), (4), (6) and (8)) rotate crankshaft exactly one full turn (360°) and check the same at valves (3), (4), (6) and (8) (or (1), (2), (5), and (7)). Adjust them as necessary.
9) After checking and adjusting all valves, reverse removal procedure for installation.

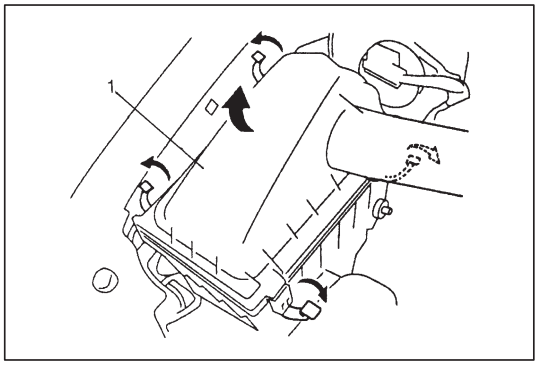

AIR CLEANER ELEMENT

This air cleaner element is of dry type. Remember that it needs cleaning according to following procedure.

REMOVAL

1) Disconnect air cleaner outlet No.1 hose from air cleaner assembly (1).
2) Open air cleaner case after unhooking its clamps.
3) Remove air cleaner element from case.

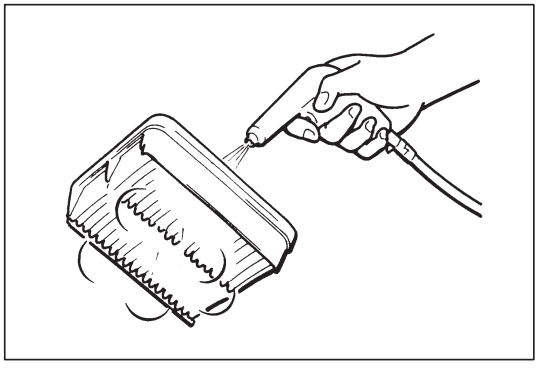

INSPECTION

Check air cleaner element for dirt. Replace excessively dirty element.

CLEANING

Blow off dust by compressed air from air outlet side of element.

INSTALLATION

Reverse removal procedure for installation.

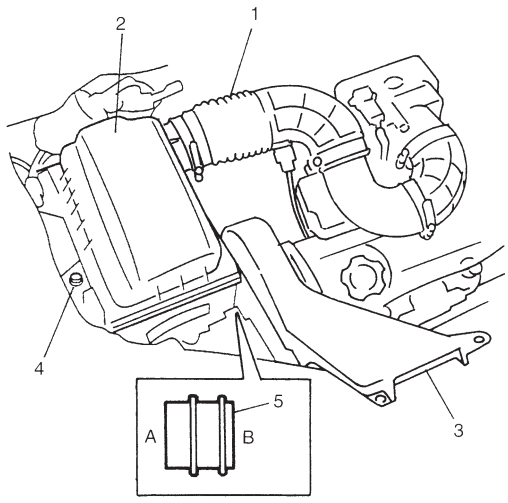

A: Air cleaner side
B: Suction pipe side

AIR CLEANER ASSEMBLY

REMOVAL

1) Disconnect air cleaner outlet No.1 hose (1) from air cleaner assembly (2).
2) Remove suction pipe (3) from air cleaner assembly.
3) Remove air cleaner assembly by removing bolt (4) shown in figure.

INSTALLATION

Reverse removal procedure for installation, noting the following.

- Install suction pipe grommet (5) in the direction indicated in figure.
- Clamp each hose securely.

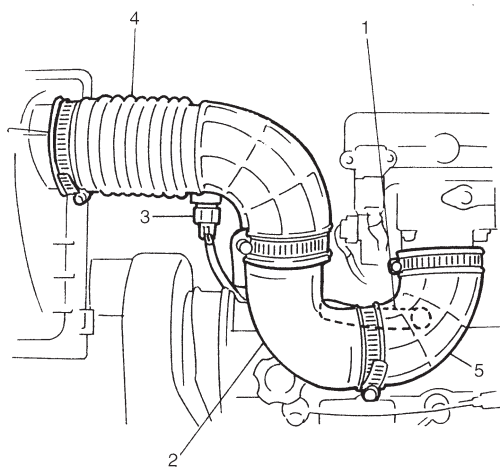

AIR CLEANER OUTLET HOSE

REMOVAL

1) Disconnect negative cable at battery.
2) Disconnect breather hose (1) from air intake joint (2).
3) Disconnect IAT sensor (3) wire at coupler.
4) Remove air cleaner outlet No.1 hose (4) and No.2 hose (5) with air intake joint.

INSTALLATION

Reverse removal procedure for installation.

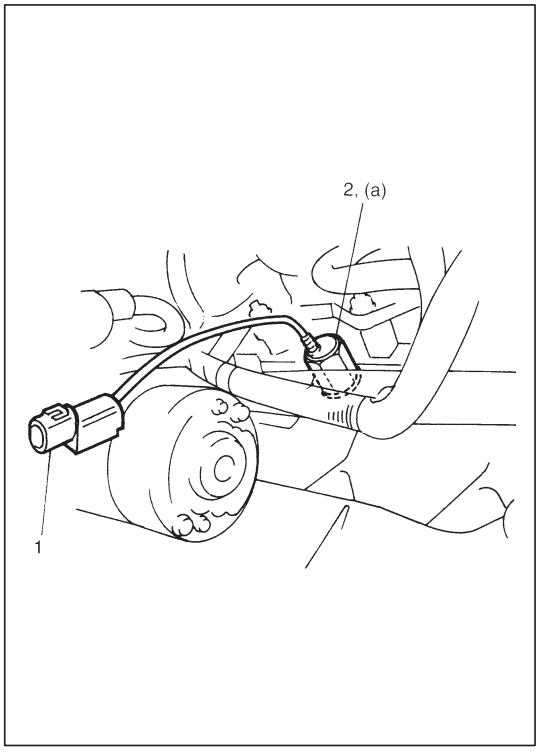

KNOCK SENSOR

REMOVAL

1) Disconnect negative cable from battery.
2) Hoist vehicle.
3) Remove intake manifold rear stiffener.
4) Disconnect knock sensor connector (1).
5) Remove knock sensor (2) from cylinder block.

INSPECTION

Check sensor for damage.
If any faulty is found, replace.

INSTALLATION

Reverse removal procedure for installation.

Tightening Torque
(a): 23 N·m (2.3 kg-m, 16.5 lb-ft)

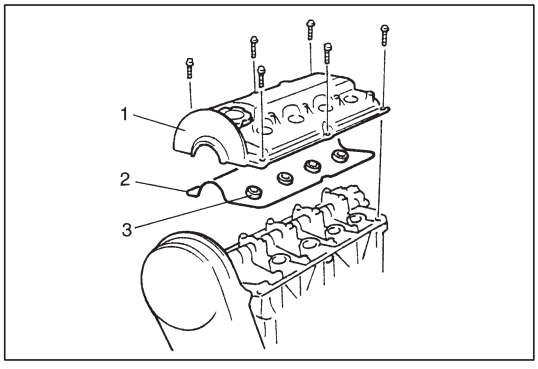

CYLINDER HEAD COVER

REMOVAL

1) Disconnect negative cable at battery.
2) Disconnect breather hose and PCV valve from head cover.
3) Remove suction pipe from air cleaner assembly.
4) Remove ignition coil assemblies with high-tension cord.
5) Remove cylinder head cover (1) with cylinder head cover gasket (2) and O-rings (3).

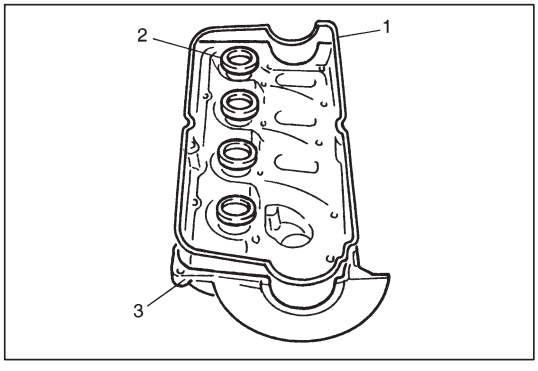

INSTALLATION

1) Install O-rings (2) and cylinder head cover gasket (1) to cylinder head cover (3).

   NOTE:
   Be sure to check each of these parts for deterioration or any damage before installation and replace if found defective.

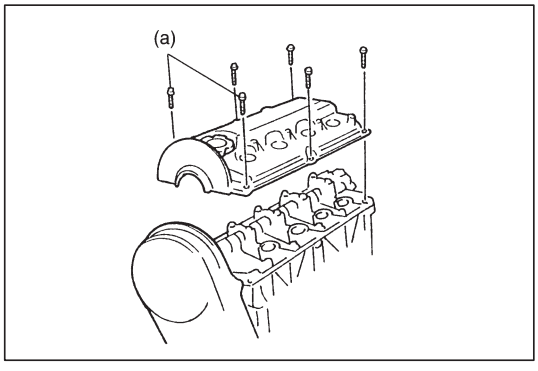

2) Install cylinder head cover to cylinder head and tighten cover bolts to specified torque.

   Tightening Torque
   (a): 11 N·m (1.1 kg-m, 8.0 lb-ft)

   NOTE:
   When installing cylinder head cover, use care so that cylinder head cover gasket or O-rings will not get out of place or fall off.

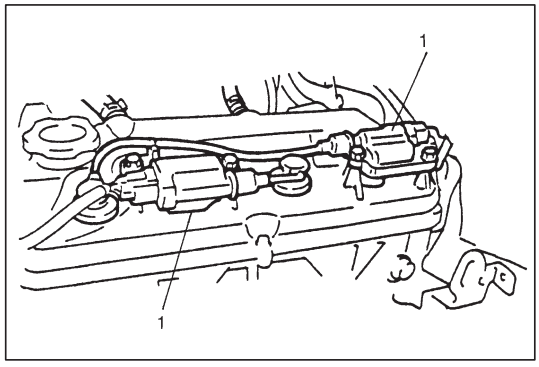

3) Install ignition coil assemblies (1) with high-tension cord.
4) Connect PCV valve and breather hose to head cover.
5) Install suction pipe to air cleaner assembly, referring to INSTALLATION of AIR CLEANER ASSEMBLY in this section.
6) Connect negative cable at battery.

THROTTLE BODY AND INTAKE MANIFOLD

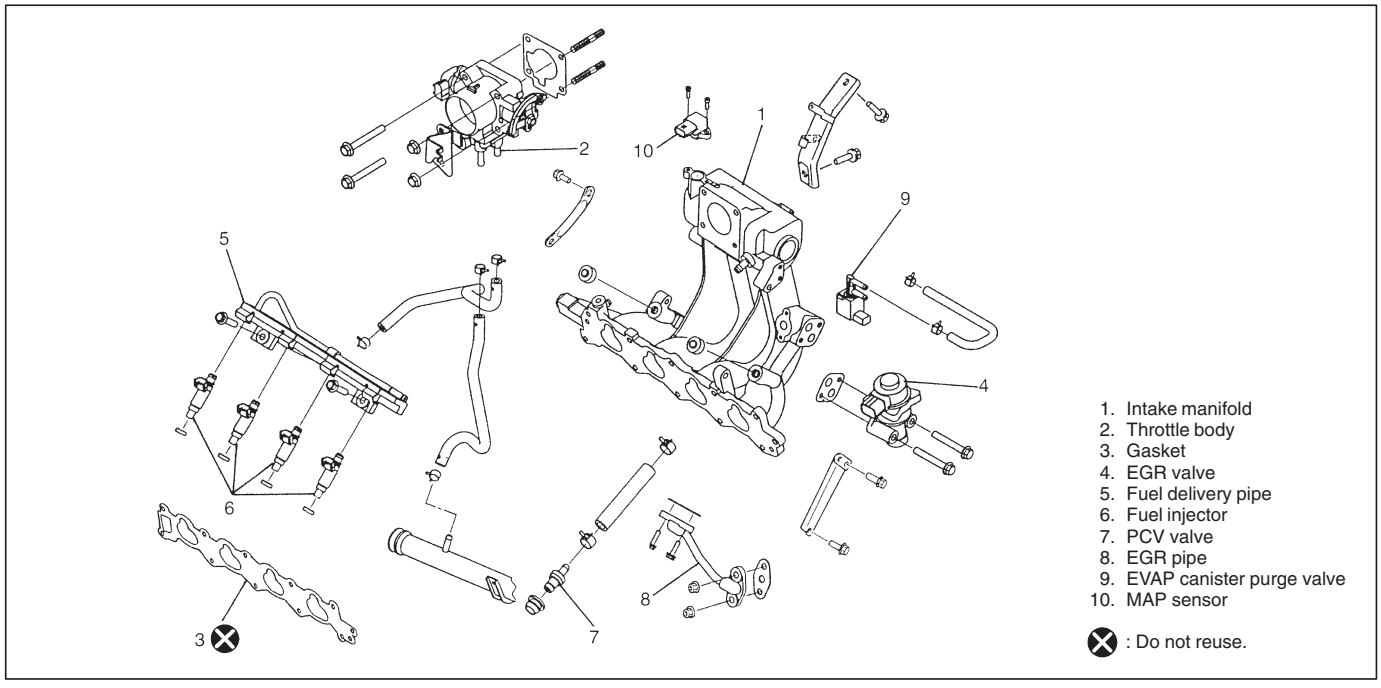

REMOVAL

1) Relieve fuel pressure according to procedure described in Section 6.
2) Disconnect negative cable at battery.

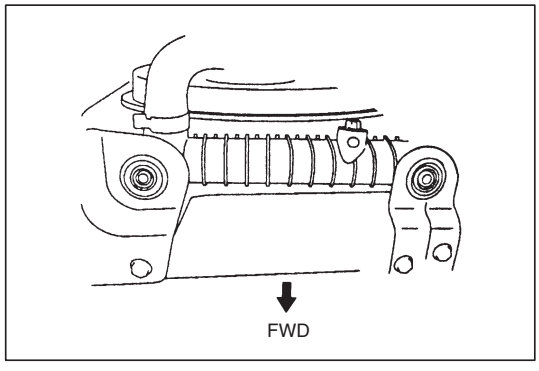

3) Drain cooling system.

WARNING:
To help avoid danger of being burned, do not remove drain plug and radiator cap while engine and radiator are still hot. Scalding fluid and steam can be blown out under pressure if plug and cap are taken off too soon.

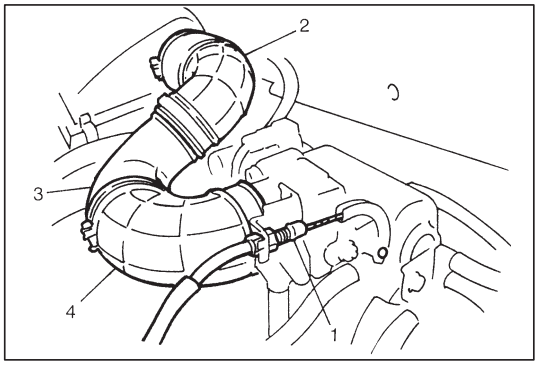

4) Disconnect accelerator cable (1) from throttle body.
5) Remove air cleaner outlet No.1 hose (2) and No.2 hose (4) with air intake joint (3).

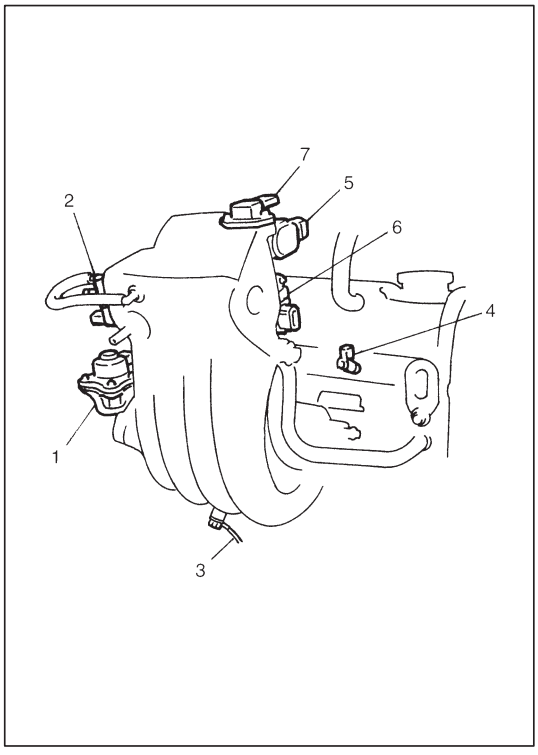

6) Disconnect following electric lead wires and release clamps.
   - EGR valve (1)
   - EVAP canister purge valve (2)
   - Ground wire (3) from intake manifold
   - Fuel injectors (4)
   - TP sensor (5)
   - IAC valve (6)
   - MAP sensor (7)

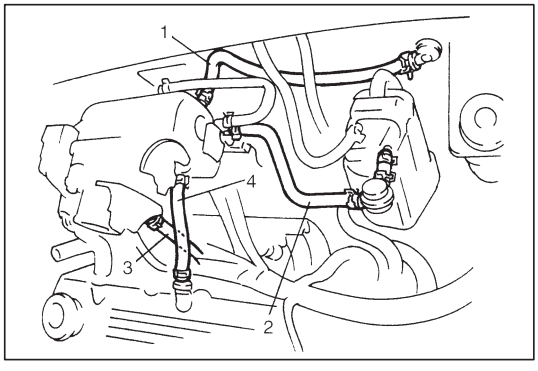

7) Disconnect following hoses:
   - Brake booster hose (1) from intake manifold.
   - EVAP canister purge hose (2) from EVAP canister purge valve.
   - Engine cooling water (coolant) hose (3) from IAC valve and intake manifold.
   - PCV hose (4) from intake manifold.

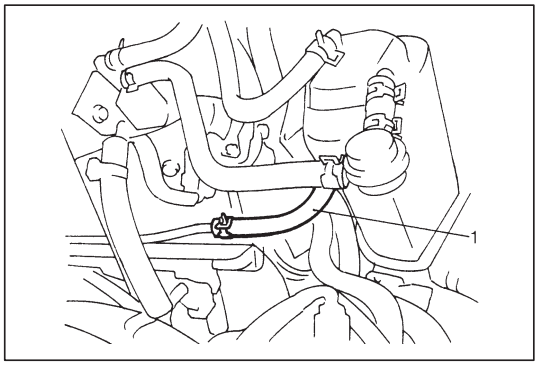

8) Disconnect fuel feed hose (1) from fuel delivery pipe.

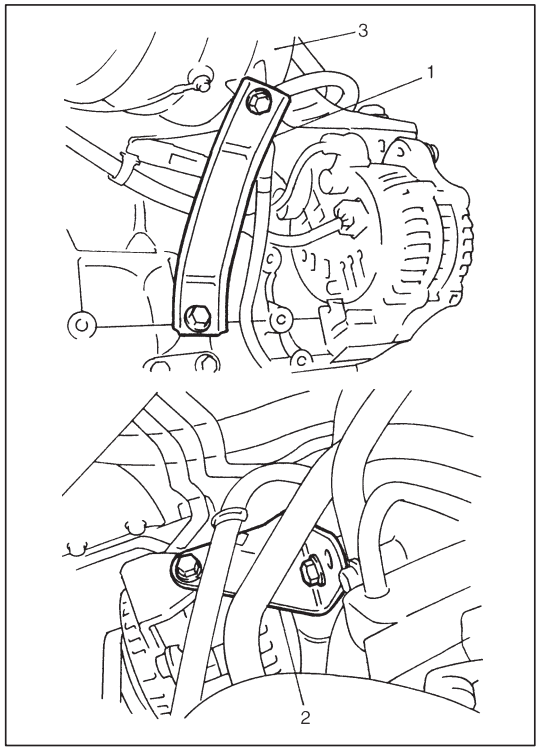

9) Remove intake manifold rear stiffener (1) and generator adjust arm reinforcement (2) from intake manifold (3).

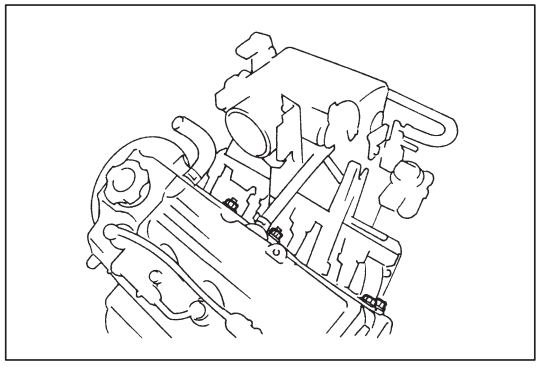

10) Remove intake manifold with throttle body from cylinder head, and then its gasket.

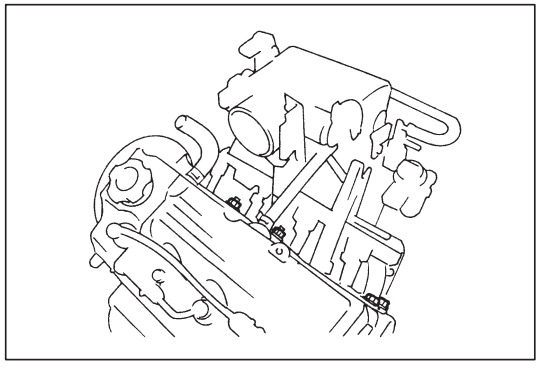

INSTALLATION

Reverse removal procedure for installation noting the followings.

- Use new intake manifold gasket.
- When installing intake manifold, install clamps at positions as shown in figure.

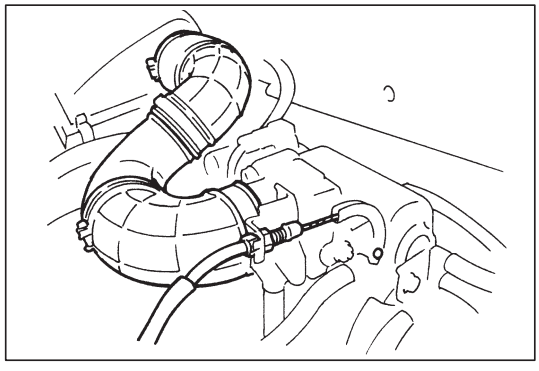

- Adjust accelerator cable play, referring to Section 6E.
- Check to ensure that all removed parts are back in place. Reinstall any necessary parts which have not been reinstalled.
- Refill cooling system, referring to Section 6B.
- Upon completion of installation, turn ignition switch ON but engine OFF and check for fuel leaks.
- Finally, start engine and check for engine coolant leaks.

EXHAUST MANIFOLD

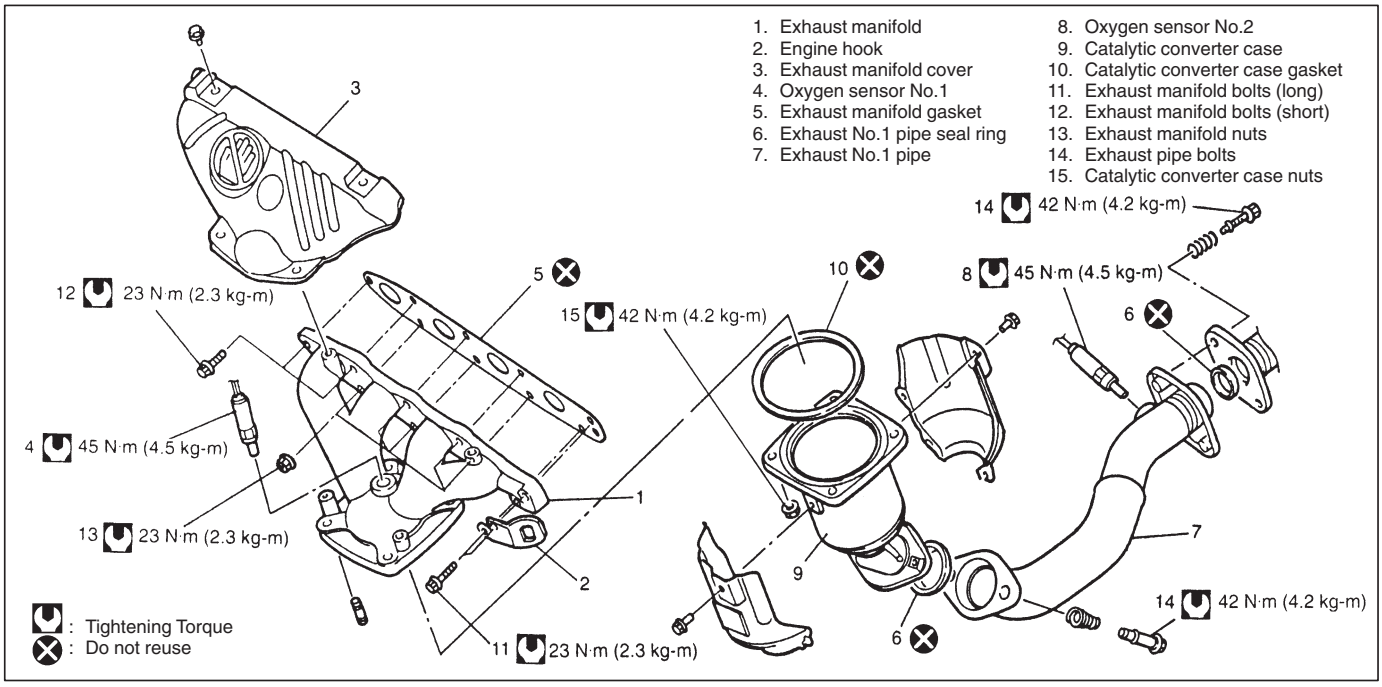

WARNING:
To avoid danger of being burned, do not service exhaust system while it is still hot. Service should be performed after system cools down.

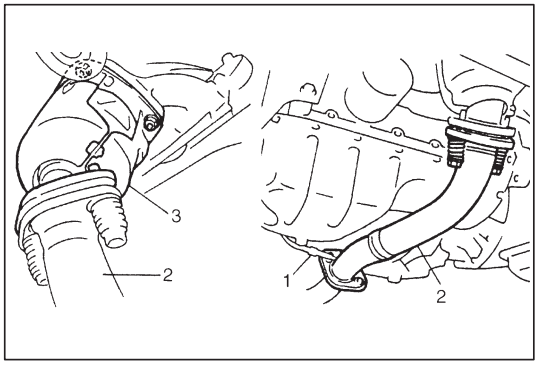

REMOVAL

1) Disconnect negative cable at battery.
2) Disconnect oxygen sensor No.2 (1) coupler and clamp.
3) Remove exhaust No.1 pipe (2) with catalytic converter case (3).

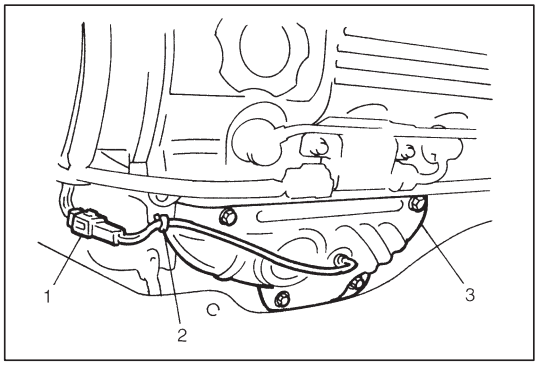

4) Disconnect oxygen sensor No.1 coupler (1) and clamp (2).
5) Remove exhaust manifold cover (3).

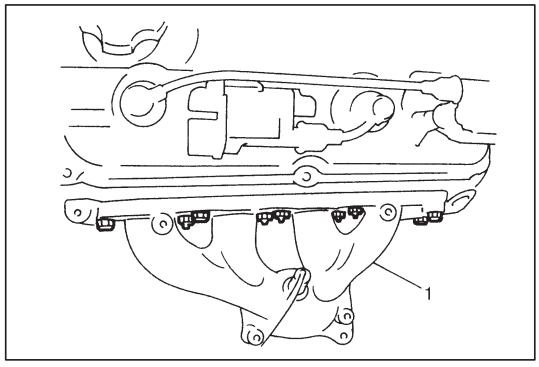

6) Remove exhaust manifold (1) and its gasket from cylinder head.
7) Remove catalytic converter case gasket and exhaust No.1 pipe seal ring (rear side).

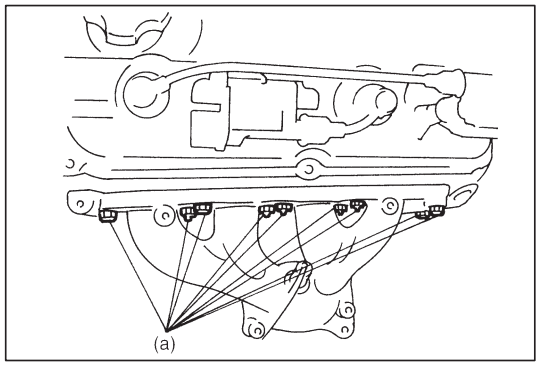

INSTALLATION

1) Install new gaskets to cylinder head, catalytic converter case and exhaust No.1 pipe (rear side).
2) Install exhaust manifold.
   Tighten manifold bolts and nuts to specified torque.

   Tightening Torque
   (a): 23 N·m (2.3 kg-m, 17.0 lb-ft)

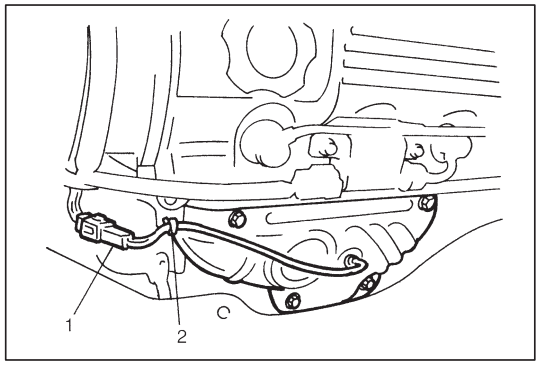

3) Install exhaust manifold cover.
4) Connect oxygen sensor No.1 coupler (1) and clamp (2) its wire securely.

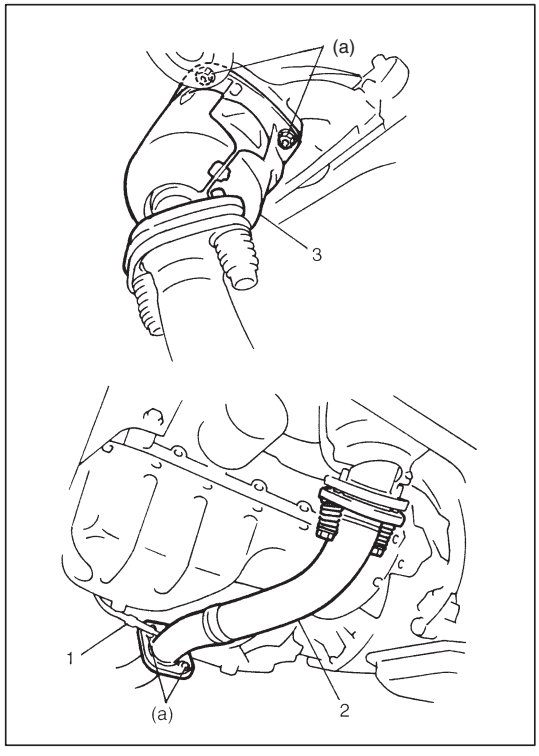

5) Install catalytic converter case (3) with exhaust No.1 pipe (2) to exhaust manifold.

   Tightening Torque
   (a): 42 N·m (4.2 kg-m, 30.5 lb-ft)

6) Connect oxygen sensor No.2 (1) coupler, refer to EXHAUST SYSTEM section.
7) Connect negative cable at battery.
8) Check exhaust system for exhaust gas leakage.

TIMING BELT AND BELT TENSIONER

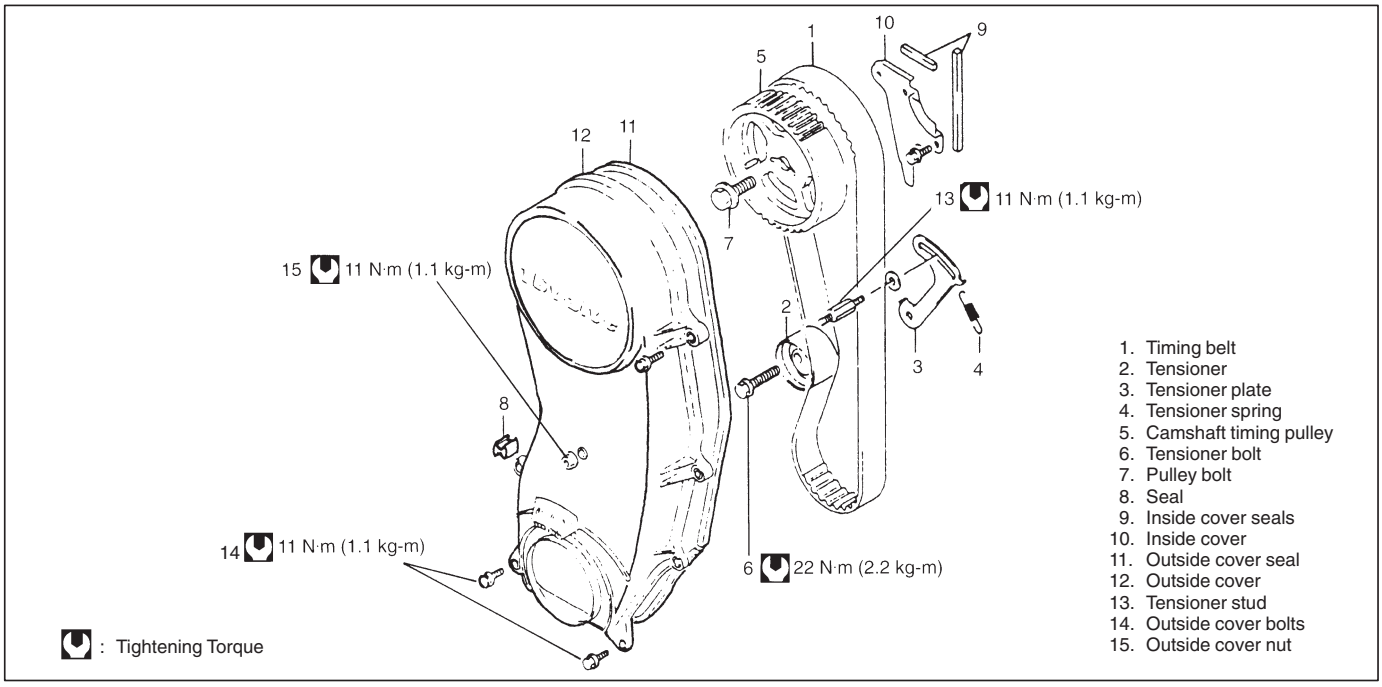

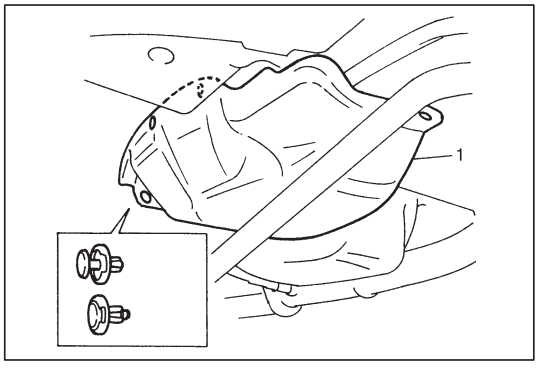

REMOVAL

1) Disconnect negative cable at battery.
2) Remove right side of engine under cover (1).
3) Disconnect A/C suction and discharge hoses from A/C compressor.
4) Remove A/C compressor and its bracket (if equipped), refer to Section 1B.
5) Remove suction pipe and air cleaner assembly.

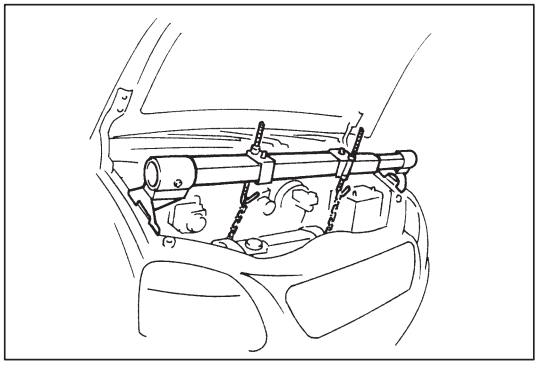

6) Support engine by using support device.

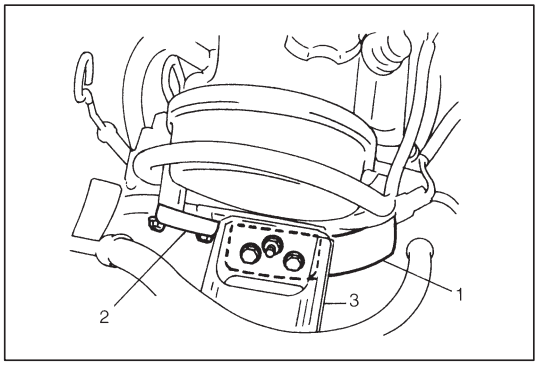

7) Remove engine right mounting bracket (1), stiffener (2) and engine right mounting swing bracket (3).

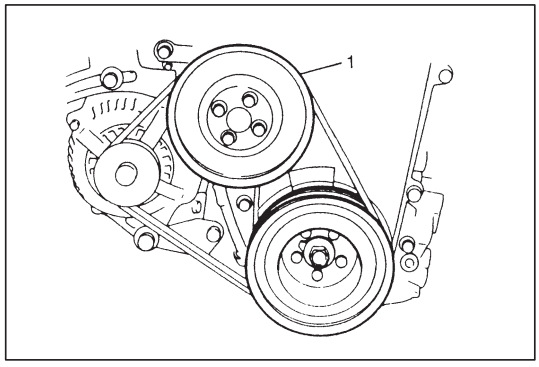

8) Remove water pump pulley (1) and drive belt.

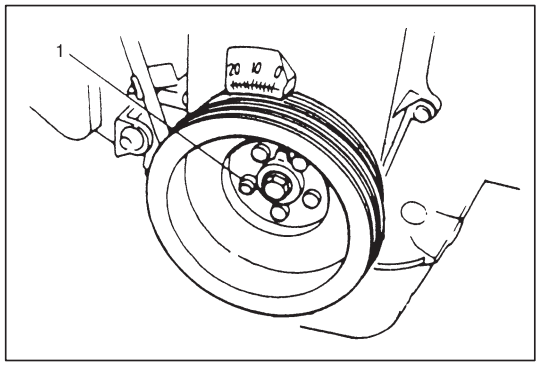

9) Remove crankshaft pulley by removing pulley bolts (1).

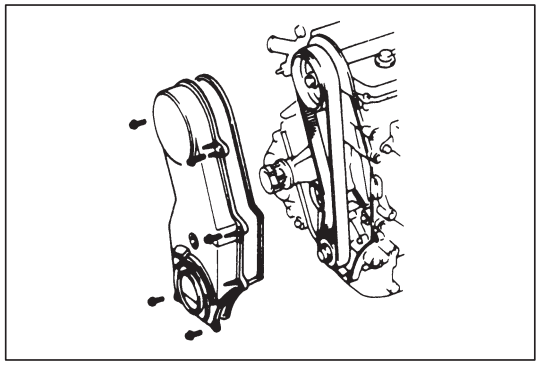

10) Release harness clamps.
11) Remove timing belt outside cover.

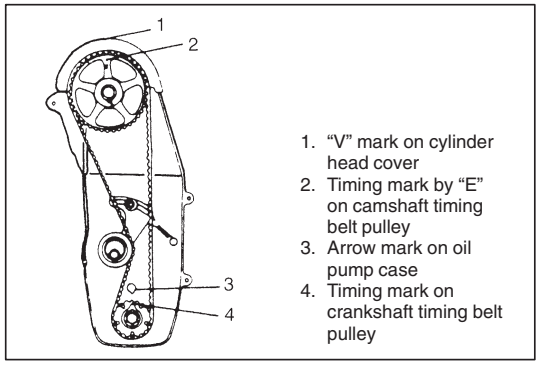

12) For installation of timing belt, align 4 timing marks as shown in figure by turning crankshaft.

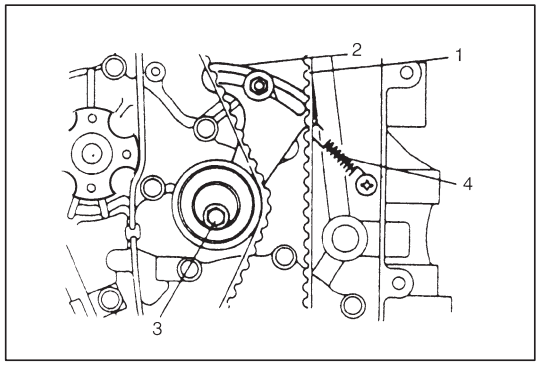

13) Remove timing belt tensioner (3), tensioner plate (2), tensioner spring (4) and timing belt (1).

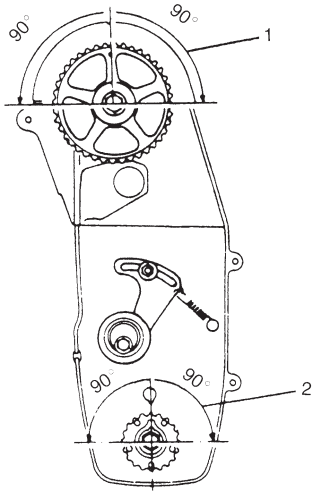

1. Camshaft allowable turning range - - - By timing mark, within 90° from "V" mark on head cover on both right and left.
2. Crankshaft allowable turning range - - - By timing mark, within 90° from arrow mark on oil pump case on both right and left.

CAUTION:
- **After timing belt is removed, never turn camshaft and crankshaft independently more than such an extent as shown in figure. If turned, interference may occur among piston and valves, and parts related to piston and valves may be damaged.**
- **Never bend timing belt.**

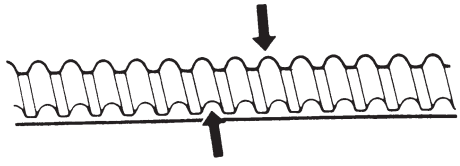

INSPECTION

- Inspect timing belt for wear or crack.
  Replace it as necessary.

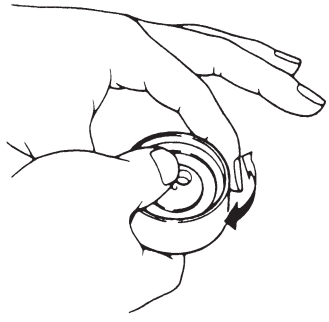

- Inspect tensioner for smooth rotation.

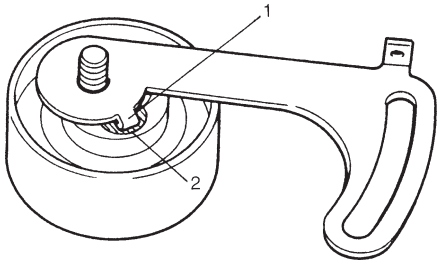

INSTALLATION

1) Install tensioner plate to tensioner.
   Insert lug (1) of tensioner plate into hole (2) in tensioner.

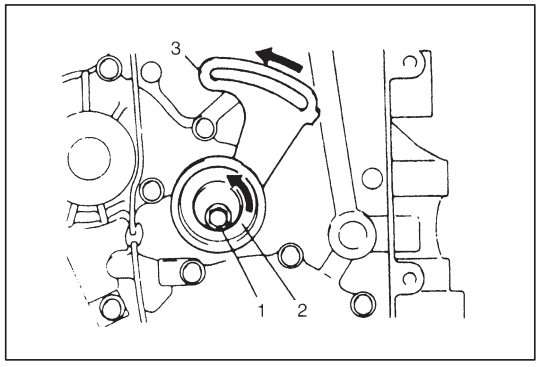

2) Install tensioner (2) and tensioner plate (3):
Do not tighten tensioner bolt (1) with wrench yet. Hand tighten only at this time.
Check to ensure that plate movement in arrow direction as shown in figure causes tensioner to move in the same direction. If no associated movement between plate and tensioner occurs, remove tensioner and plate again and reinsert plate lug into tensioner hole.

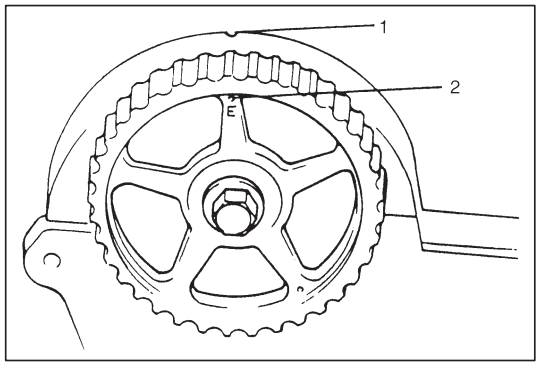

3) Check that timing mark (2) on camshaft timing belt pulley is aligned with “V” mark (1) on cylinder head cover. If not, align two marks by turning camshaft but be careful not to turn it more than its allowable turning range which is described on previous page.

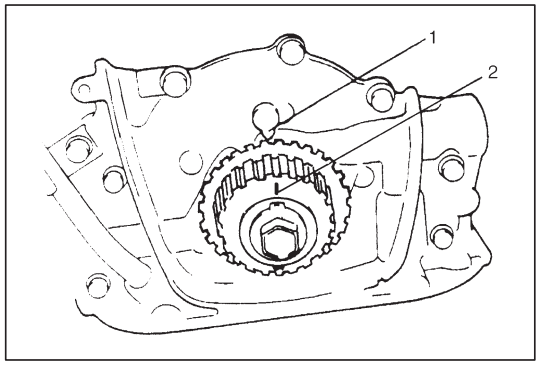

4) Check that timing mark (2) on crankshaft timing belt pulley is aligned with arrow mark (1) on oil pump case. If not, align two marks by turning crankshaft but be careful not to turn it more than its allowable turning range which is described on previous page.

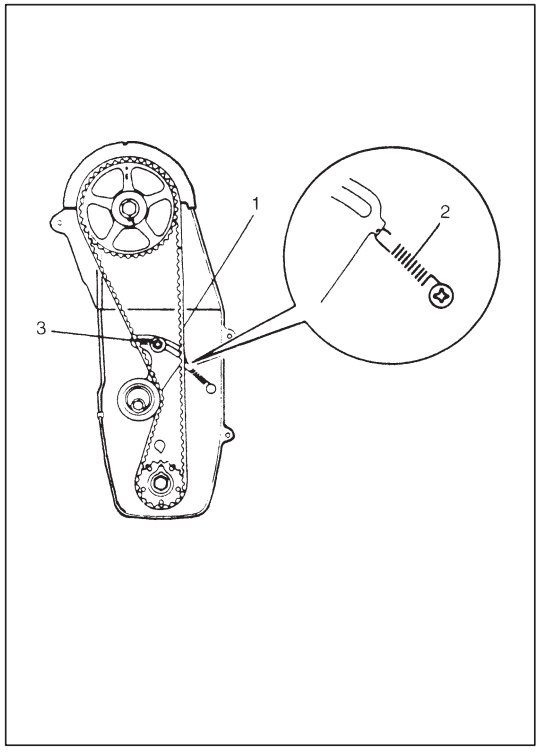

5) Install timing belt and tensioner spring (2).
With two sets of marks aligned and tensioner plate pushed up, install timing belt on two pulleys in such a way that drive side of belt (1) is free from any slack.
And then install tensioner spring as shown in figure, and hand-tighten tensioner stud (3).

NOTE:
- **When installing timing belt, match arrow mark (⇨) on timing belt with rotating direction of crankshaft.**
- **In this state, No.4 piston is at top dead center of compression stroke.**

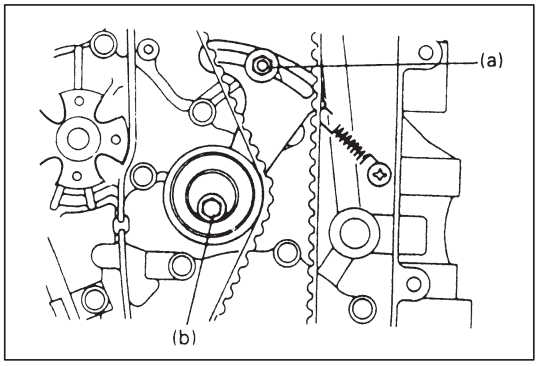

6) To take up slack of timing belt, turn crankshaft two rotations clockwise after installing it. After making sure that belt is free from slack, tighten tensioner stud first and then tensioner bolt to each specified torque.
Then confirm again that two sets of marks are aligned respectively.

Tightening Torque
(a): 11 N·m (1.1 kg-m, 8.0 lb-ft)
(b): 22 N·m (2.2 kg-m, 16.0 lb-ft)

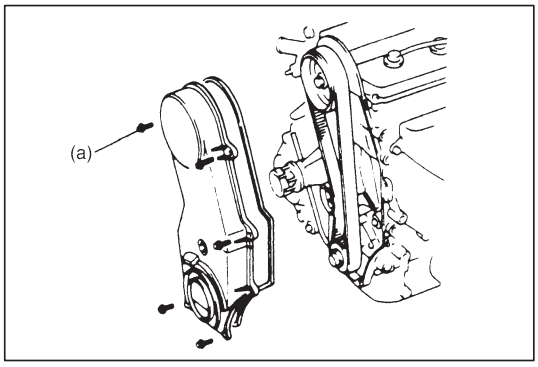

7) Install timing belt outside cover.
Before installing, make sure that seal is between water pump and oil pump case.

Tightening Torque
(a): 11 N·m (1.1 kg-m, 8.0 lb-ft)

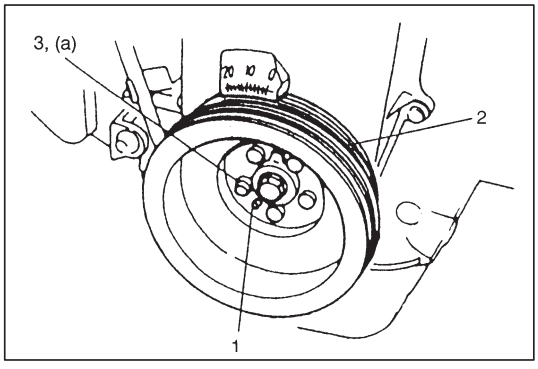

8) Install crankshaft pulley (2).
Fit hole of pulley to pin (1) on crankshaft timing belt pulley, and tighten pulley bolts (3) to specified torque.

Tightening Torque
(a): 16 N·m (1.6 kg-m, 11.5 lb-ft)

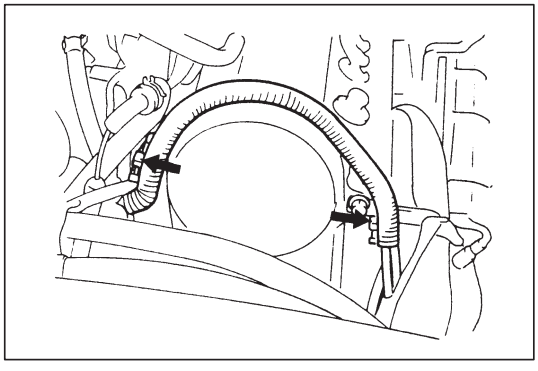

9) Clamp harness securely.

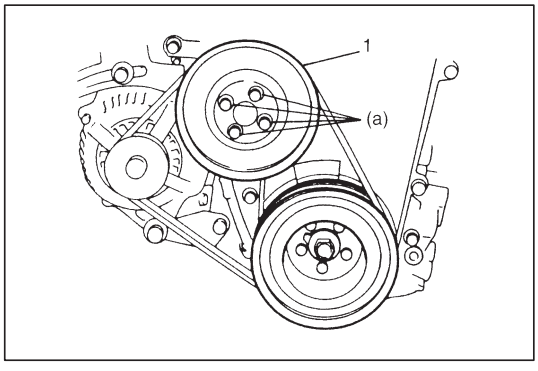

10) Install water pump pulley (1) and drive belt.

Tightening Torque
(a): 11 N·m (1.1 kg-m, 8.0 lb-ft)

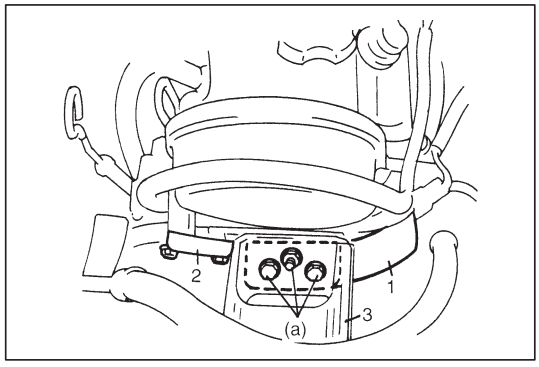

11) Install engine right mounting bracket (1), stiffener (2) and engine right mounting swing bracket (3).

Tightening Torque
(a): 55 N·m (5.5 kg-m, 40.0 lb-ft)

12) Remove support device.

13) Install A/C compressor bracket and A/C compressor, if equipped.
14) Connect A/C suction and discharge hoses, if equipped.
15) Adjust drive belt tension, referring to “ENGINE COOLING” section.
16) Adjust A/C compressor belt tension, if equipped.
Refer to Section 1B.
17) Evacuate and charge air conditioning system, refer to Section 1B.
18) Install suction pipe to air cleaner assembly, refer to INSTALLATION of AIR CLEANER ASSEMBLY in this section.
19) Connect negative cable at battery.

OIL PAN AND OIL PUMP STRAINER

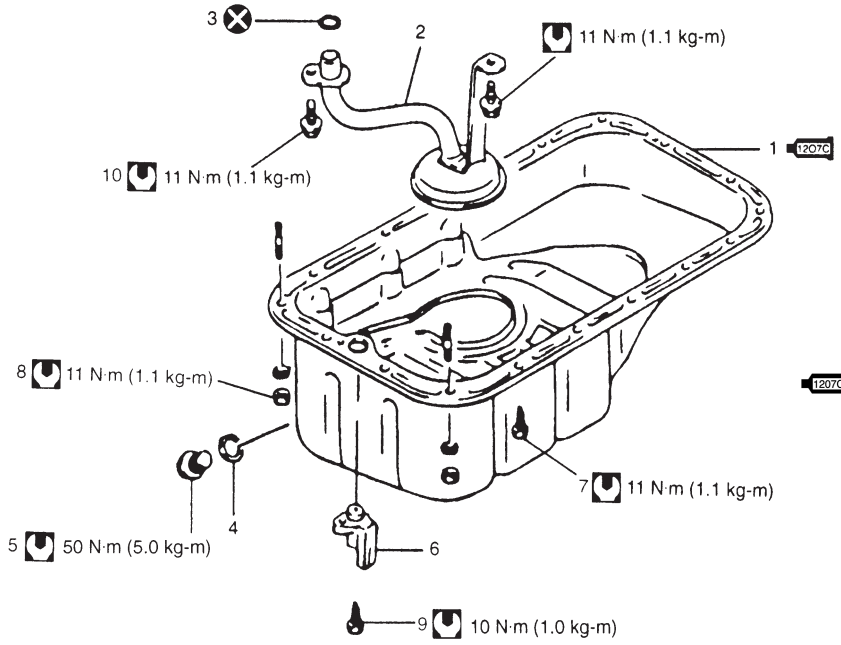

1207C 1. Oil pan:
Apply sealant 99000-31150 to oil pan mating surface
2. Oil pump strainer
3. Seal
4. Drain plug gasket
5. Drain plug
6. CKP sensor
7. Oil pan bolts
8. Oil pan nuts
9. CKP sensor bolt
10. Oil pump strainer bolt
11. Oil pump strainer bracket bolt

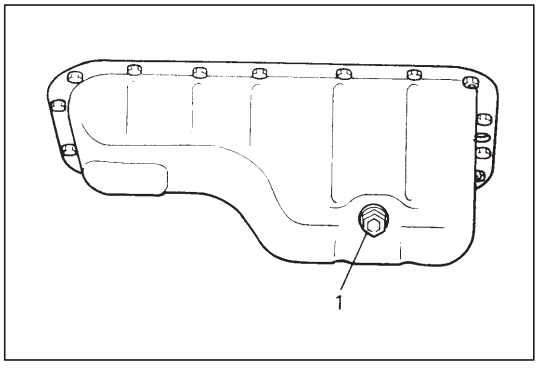

REMOVAL

1) Raise vehicle.
2) Drain engine oil by removing drain plug (1).

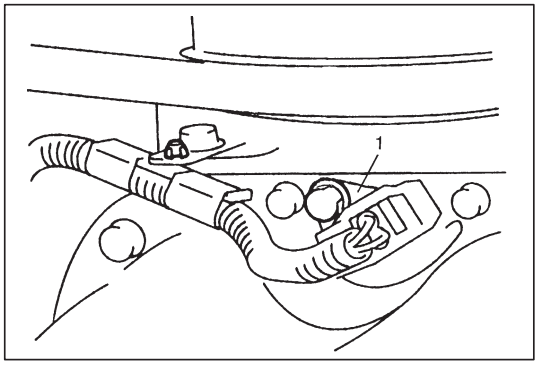

3) Remove right side of engine under cover.
4) Disconnect oxygen sensor No.2 connector and then remove exhaust No.1 pipe with oxygen sensor No.2.
5) Remove clutch housing (torque converter housing for A/T) lower plate.
6) Remove CKP sensor (1).

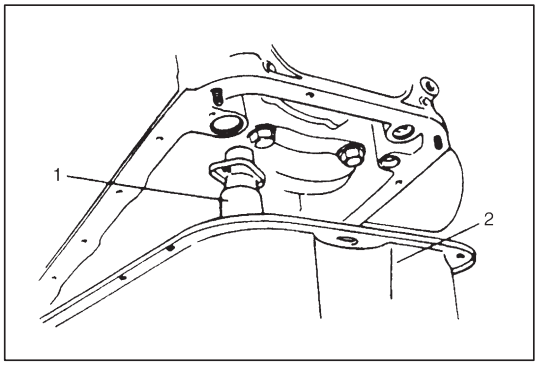

7) Remove oil pan (2) and then oil pump strainer (1).

CLEANING

- Clean mating surface of oil pan and cylinder block.
  Remove oil, old sealant, and dusts from mating surfaces and oil pan inside.
- Clean oil pump strainer screen.

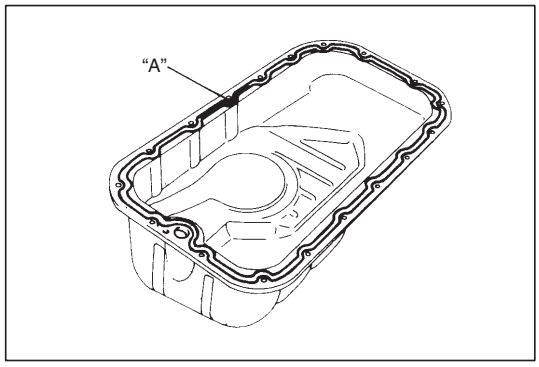

INSTALLATION

1) Apply sealant to oil pan mating surface continuously as shown in figure.

   "A" Sealant: 99000-31150

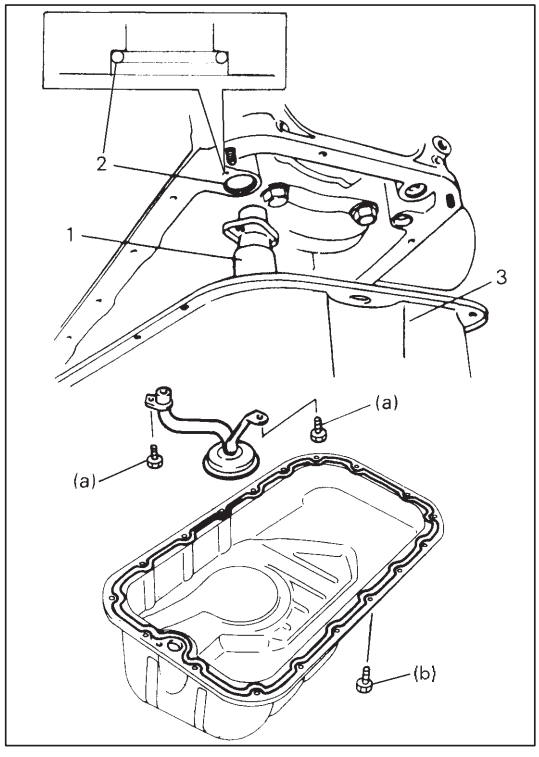

2) Install oil pump strainer (1) and oil pan (3) as described below.
   Install O-ring (2) into cylinder block securely as shown in figure.
   Install oil pump strainer to cylinder block.
   Tighten strainer bolt first and then bracket bolt to specified torque.

   Tightening Torque
   (a): 11 N·m (1.1 kg-m, 8.0 lb-ft)

   After fitting oil pan to cylinder block, run in securing bolts and start tightening at the center: move wrench outward, tightening one bolt at a time.
   Tighten bolts to specified torque.

   Tightening Torque
   (b): 11 N·m (1.1 kg-m, 8.0 lb-ft)

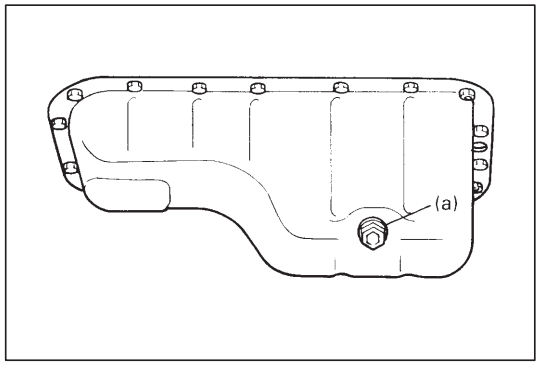

3) Install gasket and drain plug to oil pan.
   Tighten drain plug to specified torque.

   Tightening Torque
   (a): 50 N·m (5.0 kg-m, 36.5 lb-ft)

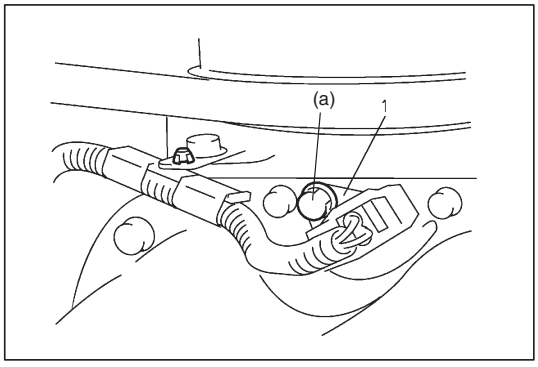

4) Install CKP sensor (1) and connect its coupler, then clamp its harness.

Tightening Torque
(a): 10 N·m (1.0 kg-m, 7.5 lb-ft)

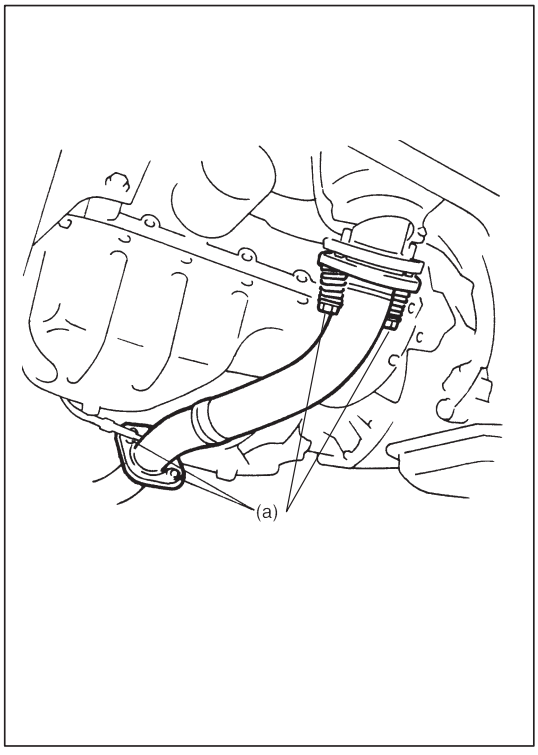

5) Install exhaust No.1 pipe and connect oxygen sensor No.2 connector.
Tighten bolts to specified torque.

Tightening Torque
(a): 42 N·m (4.2 kg-m, 30.5 lb-ft)

NOTE:
Use new gasket for exhaust No.1 pipe.

6) Install right side of engine under covers.
7) Refill engine with engine oil, referring to item “ENGINE OIL CHANGE” in Section 0B.

OIL PUMP

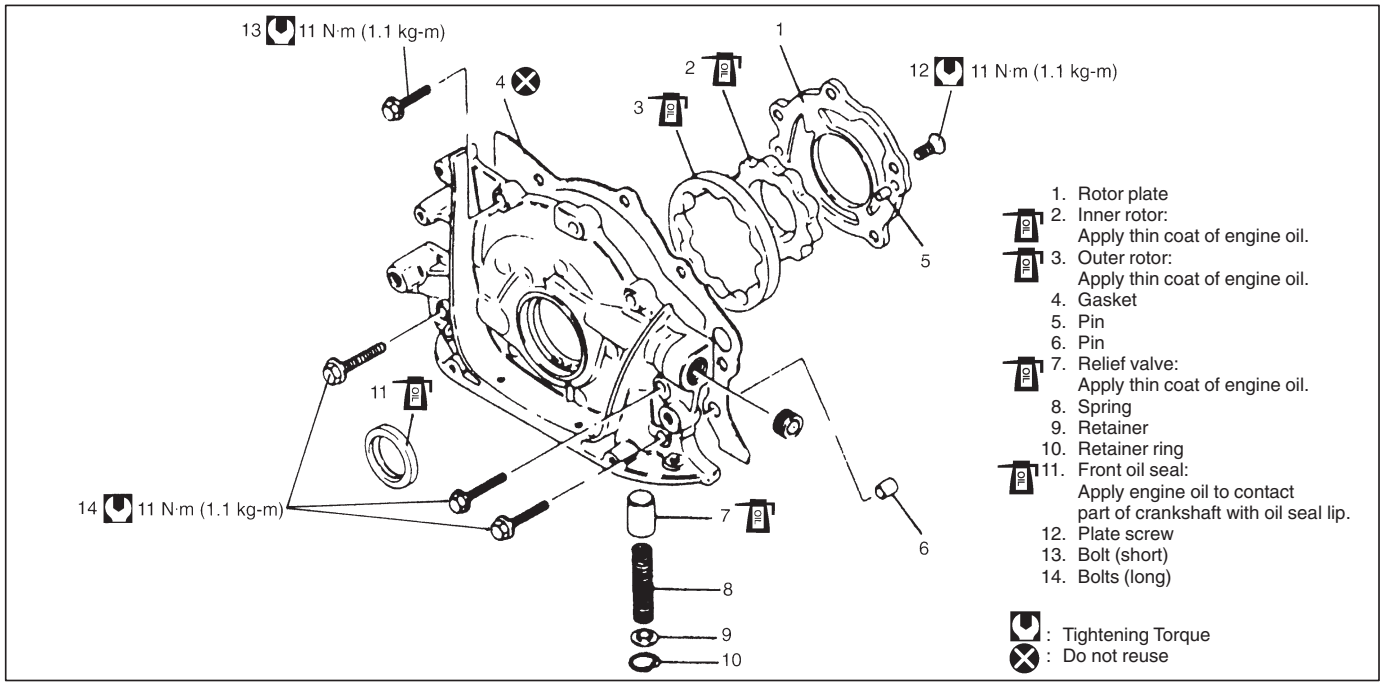

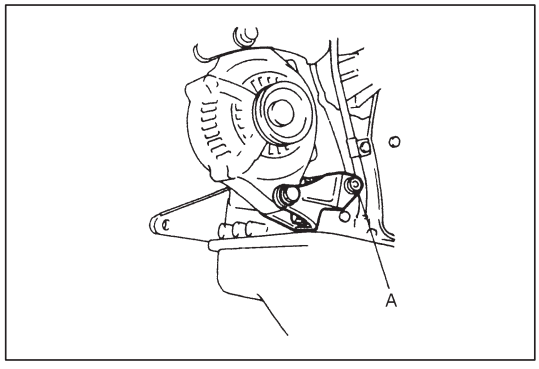

REMOVAL

1) Disconnect negative cable at battery.
2) Remove timing belt as previously outlined.
3) Remove generator and its bracket.

NOTE:
When installing bracket, tighten nut (A) first.

4) Remove oil pan and oil pump strainer as previously outlined.

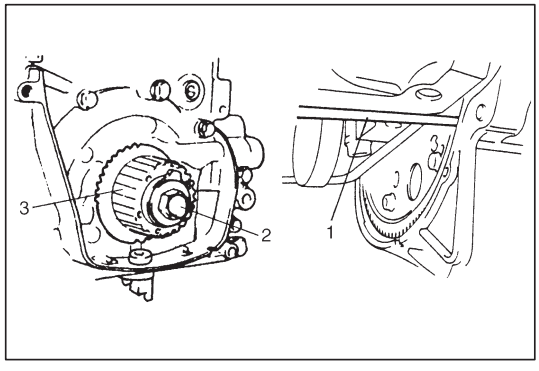

5) Remove crankshaft timing belt pulley (3).
   Using flat end rod or the like (1) with flywheel ring gear (drive plate ring gear for A/T) to lock crankshaft.
   With crankshaft locked, remove crankshaft timing belt pulley bolt (2).

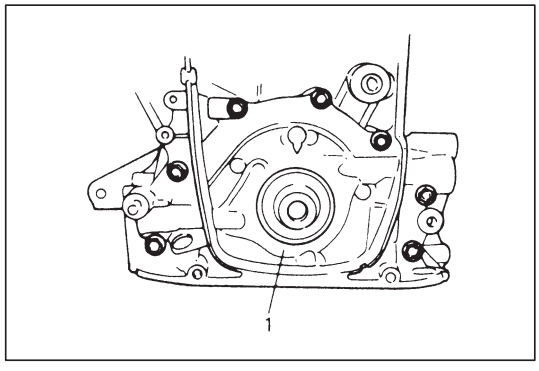

6) Remove oil pump (1) assembly.

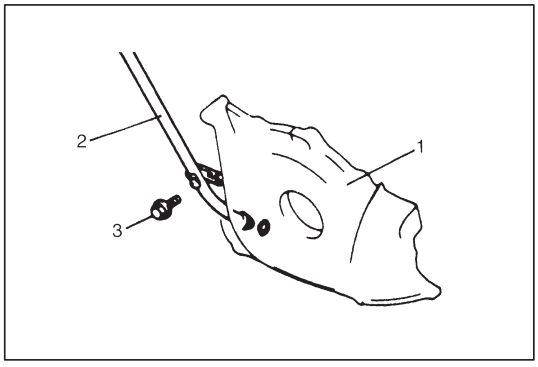

DISASSEMBLY

1) Remove oil level gauge guide bolt (3) and pull out guide (2) from oil pump (1).

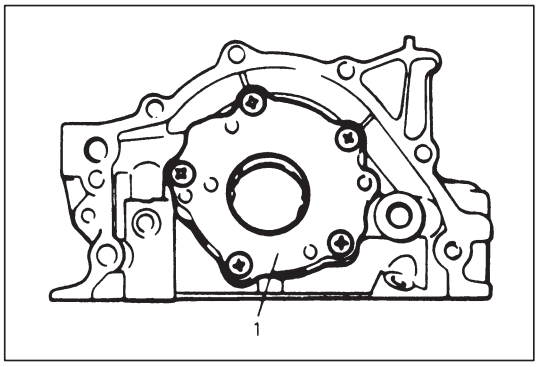

2) Remove rotor plate (1).

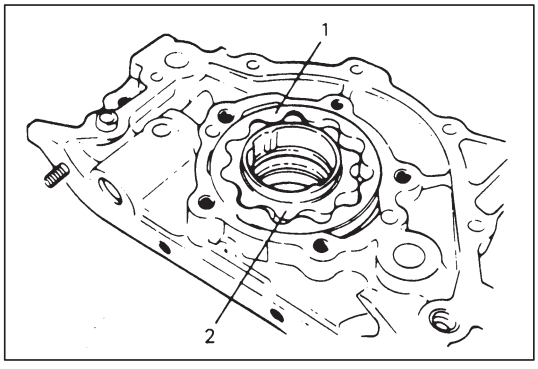

3) Remove outer rotor (1) and inner rotor (2).

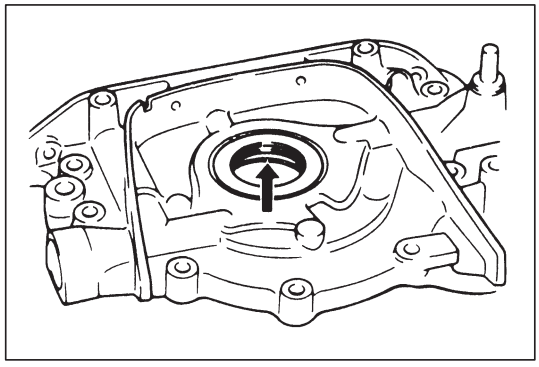

INSPECTION

- Check oil seal lip for fault or other damage. Replace as necessary.

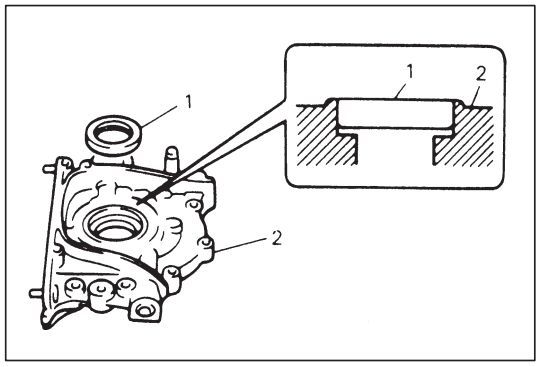

NOTE:
When installing oil seal (1), press-fit it till its end face is flush with oil pump case (2) end face.

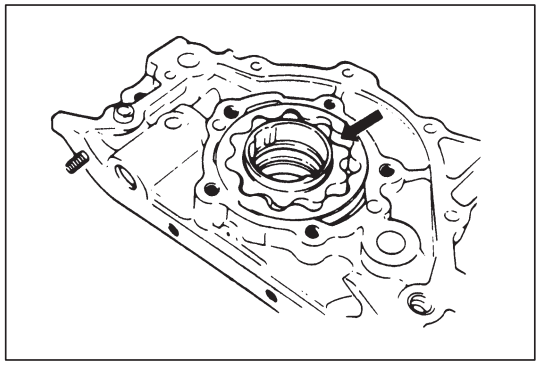

- Check outer and inner rotors, rotor plate, and oil pump case for excessive wear or damage.

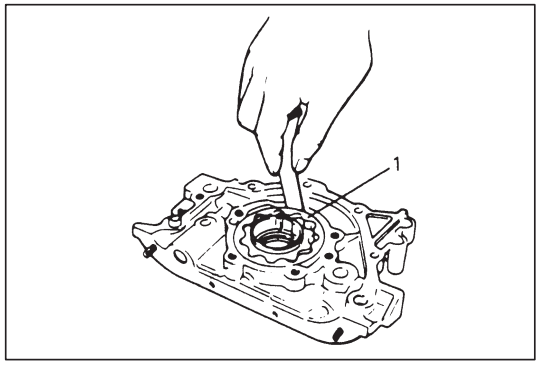

MEASUREMENT

- **Radial clearance**
  Check radial clearance between outer rotor (1) and case, using thickness gauge.
  If clearance exceeds its limit, replace outer rotor or case.

  Limit on radial clearance between outer rotor and case: 0.2 mm (0.0079 in.)

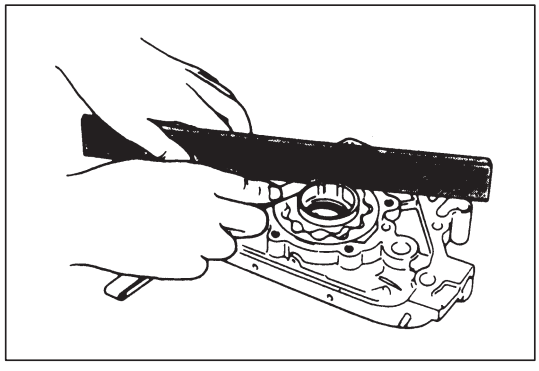

- **Side clearance**
  Using straight edge and thickness gauge, measure side clearance.

  Limit on side clearance: 0.1 mm (0.0039 in.)

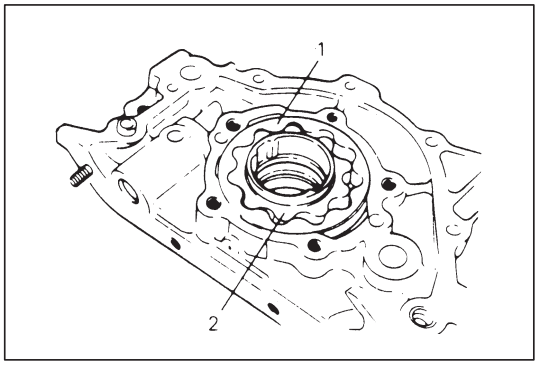

ASSEMBLY

1) Wash, clean and then dry all disassembled parts.
2) Apply thin coat of engine oil to inner rotor (2) and outer rotor (1), oil seal lip portion, and inside surfaces of oil pump case and plate.
3) Install outer and inner rotors to pump case.

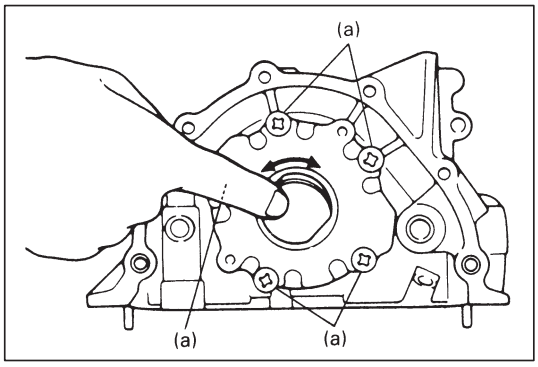

4) Install rotor plate. Tighten screws securely.
   After installing plate, check to be sure that gears turn smoothly by hand.

   Tightening Torque
   (a): 11 N·m (1.1 kg-m, 8.0 lb-ft)

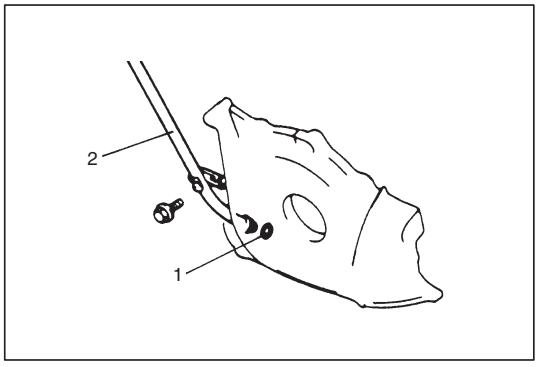

5) Apply engine oil to O-ring (1) and install O-ring and guide (2).

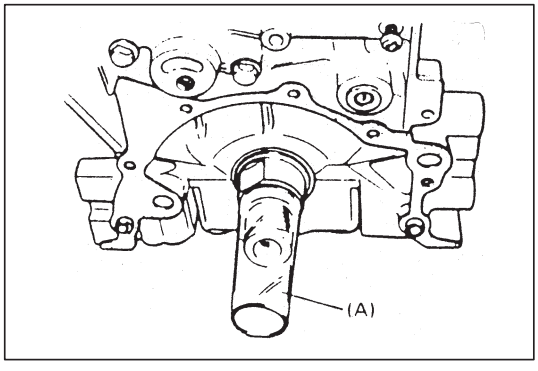

INSTALLATION

1) Install two oil pump pins and oil pump gasket to cylinder block. Use a new gasket.
2) To prevent oil seal lip from being damaged or upturned when installing oil pump to crankshaft, fit special tool (Oil seal guide) to crankshaft, and apply engine oil to special tool.

   Special Tool
   (A): 09926-18210

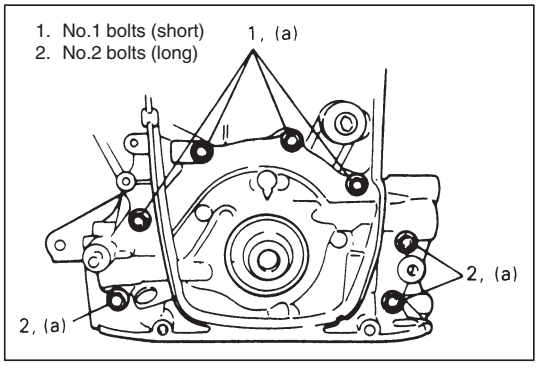

3) Install oil pump to cylinder block.
   As there are 2 types of oil pump bolts, refer to figure for their correct use and tighten them to specified torque.

   Tightening Torque
   (a): 11 N·m (1.1 kg-m, 8.0 lb-ft)

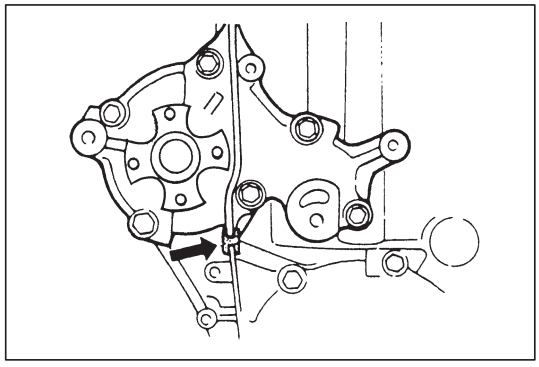

4) Install rubber seal between oil pump and water pump.

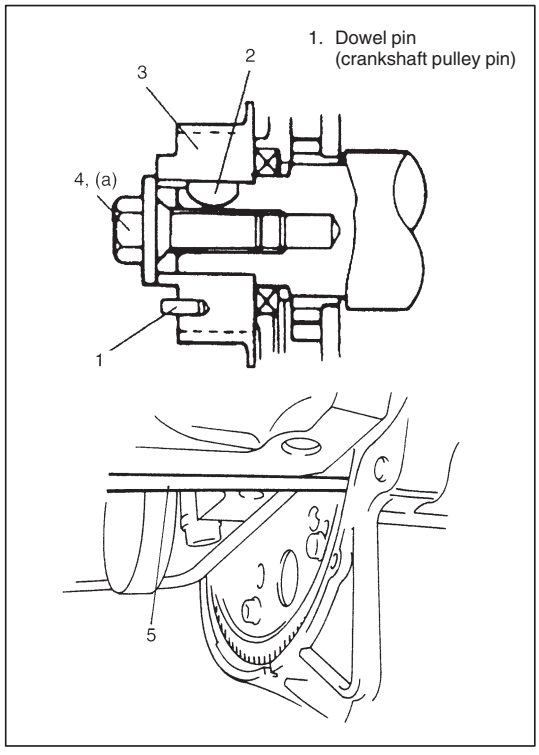

5) Install key (2) and crank timing belt pulley (3). Refer to figure for proper installation of these parts.
With crankshaft locked using flat end rod or the like (5), tighten crank timing belt pulley bolt (4) to specified torque.

Tightening Torque
(a): 130 N·m (13.0 kg-m, 94.0 lb-ft)

6) Install timing belt, tensioner, oil pump strainer, oil pan and other parts as previously outlined.
7) Check to ensure that all removed parts are back in place. Reinstall any necessary parts which have not been reinstalled.
8) Adjust water pump drive belt tension, referring to “ENGINE COOLING” section.
9) Adjust A/C compressor belt tension, if equipped. Refer to SECTION 1B.
10) Refill engine with engine oil, referring to item “ENGINE OIL CHANGE” in SECTION 0B.
11) Connect negative cable at battery.
12) After completing installation, check oil pressure by running engine.

ROCKER ARMS, ROCKER ARM SHAFT AND CAMSHAFT

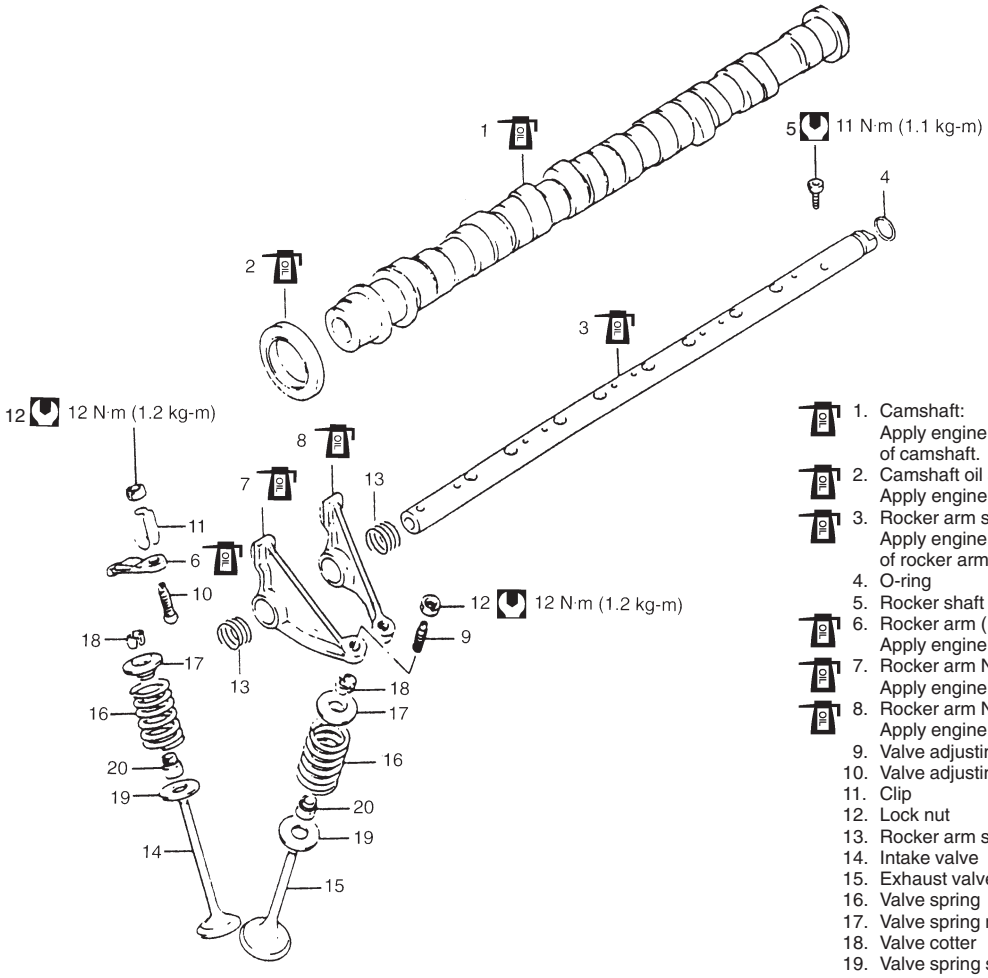

1. Camshaft: Apply engine oil to sliding surface of camshaft.
2. Camshaft oil seal: Apply engine oil to oil seal lip.
3. Rocker arm shaft: Apply engine oil to sliding surface of rocker arm shaft.
4. O-ring
5. Rocker shaft bolts
6. Rocker arm (IN): Apply engine oil.
7. Rocker arm No.1 (EX): Apply engine oil.
8. Rocker arm No.2 (EX): Apply engine oil.
9. Valve adjusting screw
10. Valve adjusting screw
11. Clip
12. Lock nut
13. Rocker arm spring
14. Intake valve
15. Exhaust valve
16. Valve spring
17. Valve spring retainer
18. Valve cotter
19. Valve spring seat
20. Valve stem seal

: Tightening Torque

REMOVAL

1) After disconnect negative and positive cables at battery, remove battery and battery tray.
2) Drain cooling system.
3) Disconnect radiator inlet hose from thermostat case.
4) Remove timing belt as previously outlined.

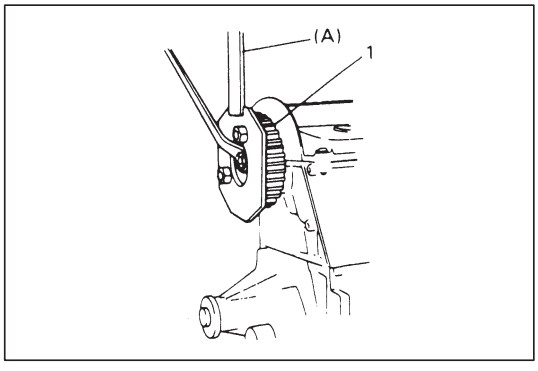

5) Remove camshaft timing belt pulley (1) by using special tool.

   Special Tool
   (A): 09917-68220

6) Remove cylinder head cover as previously outlined.

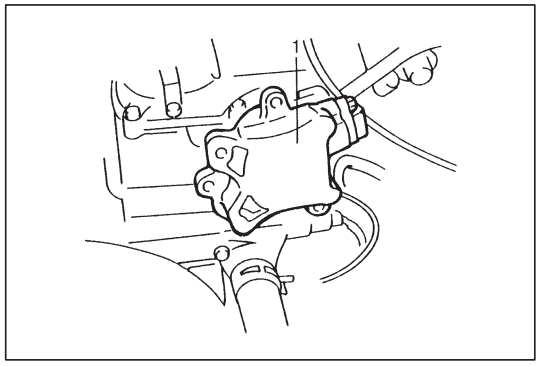

7) Remove engine harness clamp bracket from CMP sensor case (1).
8) Disconnect CMP sensor connector and remove CMP sensor case from cylinder head.
   Place a container or rag under CMP sensor case, for a small amount of oil flows out during removal of case.

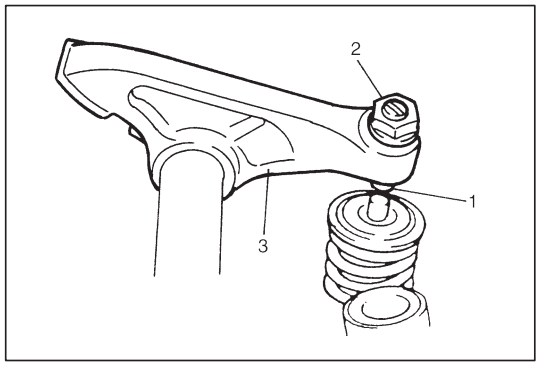

9) After loosening all valve adjusting screw lock nuts (2), turn adjusting screws (1) back all the way to allow all rocker arms (3) to move freely.

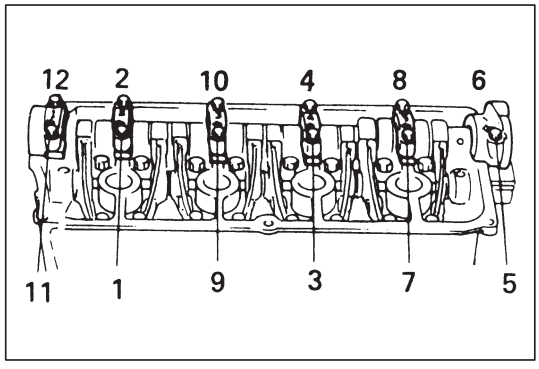

10) Remove camshaft housing and camshaft.

NOTE:
To remove camshaft housing bolts, loosen them in such order as indicated in figure, a little at a time.

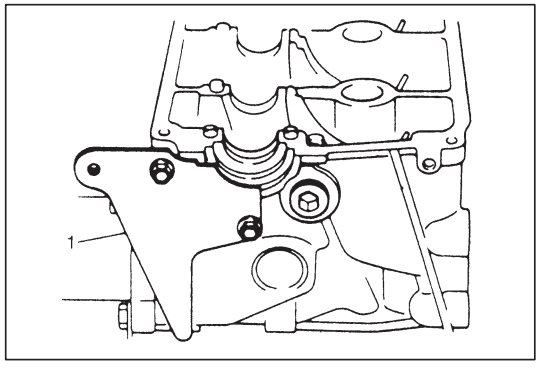

11) Remove timing belt inside cover (1).

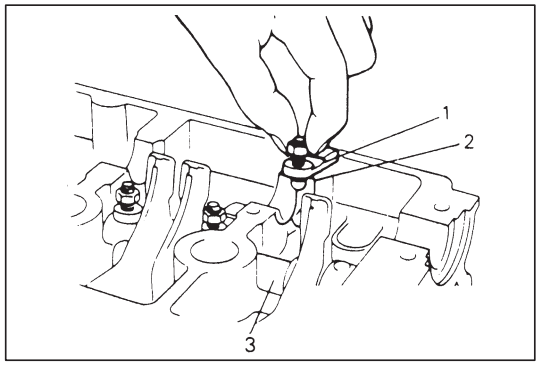

12) Remove intake rocker arm (1) with clip (2) from rocker arm shaft (3).

NOTE:
Do not bend clip when removing intake rocker arm.

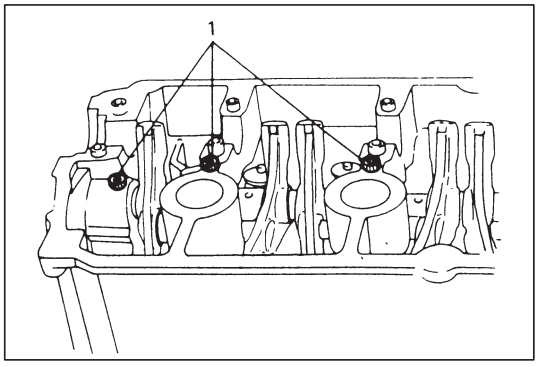

13) Remove rocker arm shaft bolts (1).

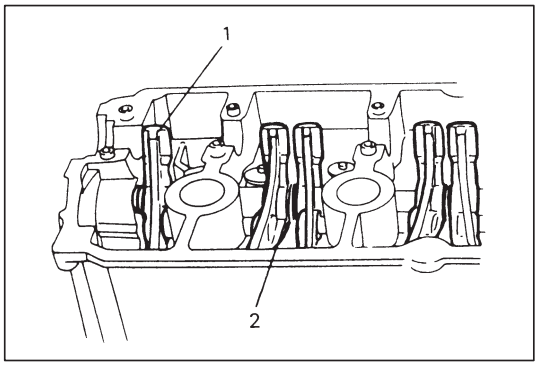

14) Remove exhaust rocker arms (1) and rocker arm spring (2) by pulling rocker arm shaft to transmission side.
15) Remove O-ring from rocker arm shaft.

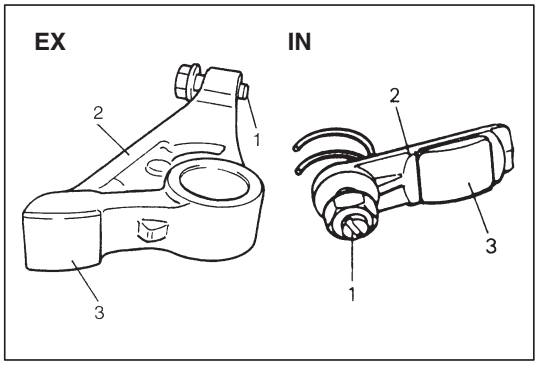

INSPECTION

Adjusting Screw and Rocker Arm

If tip of adjusting screw (1) is badly worn, replace it.
Rocker arm (2) must be replaced if its cam-riding face (3) is badly worn.

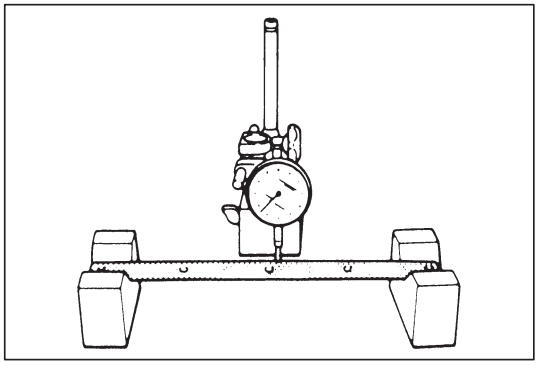

Rocker Arm Shaft Runout

Using “V” blocks and dial gauge, check runout. If runout exceeds its limit, replace rocker arm shaft.

Runout limit: 0.10 mm (0.004 in.)

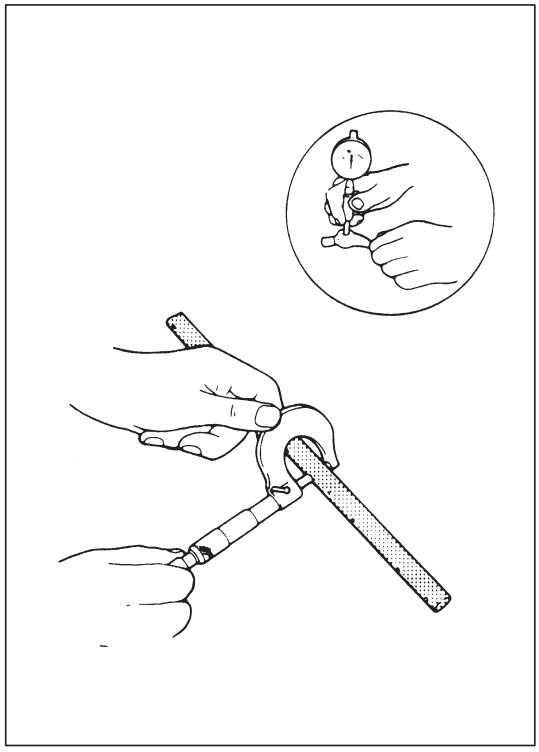

Rocker Arm-to-Rocker Arm Shaft Clearance

Using a micrometer and a bore gauge, measure rocker shaft dia. and rocker arm I.D.

Difference between two readings is arm-to-shaft clearance on which a limit is specified.

If limit is exceeded, replace shaft or arm, or both.

Item	Standard	Limit
Rocker arm I.D.	15.996 – 16.014 mm (0.629 – 0.630 in.)	———
Rocker arm shaft dia.	15.969 – 15.984 mm (0.6287 – 0.6293 in.)	———
Arm-to-shaft clearance	0.012 – 0.045 mm (0.0005 – 0.0018 in.)	0.09 mm (0.0035 in.)

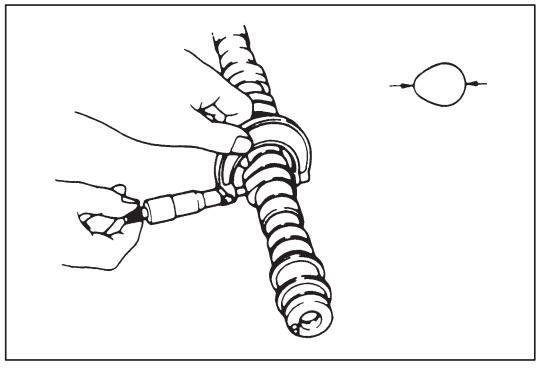

Cam Wear

Using a micrometer, measured height of cam. If measured height is below limit, replace camshaft.

Cam height	Standard	Limit
Intake cam	36.184 – 36.344 mm (1.4246 – 1.4309 in.)	36.084 mm (1.4206 in.)
Exhaust cam	35.900 – 36.060 mm (1.4134 – 1.4197 in.)	35.800 mm (1.4094 in.)

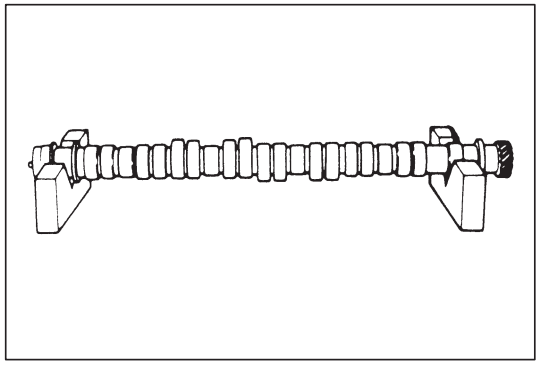

Camshaft Runout

Hold camshaft between two “V” blocks, and measure runout by using a dial gauge.

If runout exceeds the limit, replace camshaft.

Runout limit: 0.10 mm (0.0039 in.)

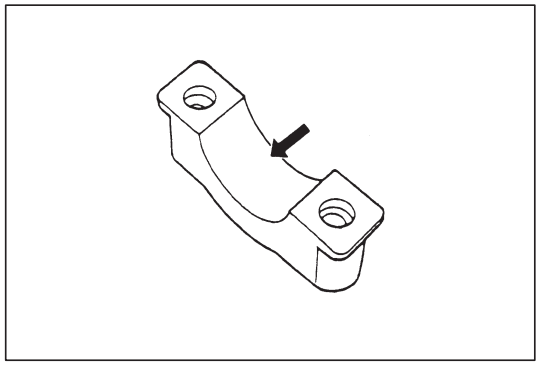

Camshaft Journal Wear

Check camshaft journals and camshaft housings for pitting, scratches, wear or damage.

If any malcondition is found, replace camshaft or cylinder head with housing. Never replace cylinder head without replacing hosing.

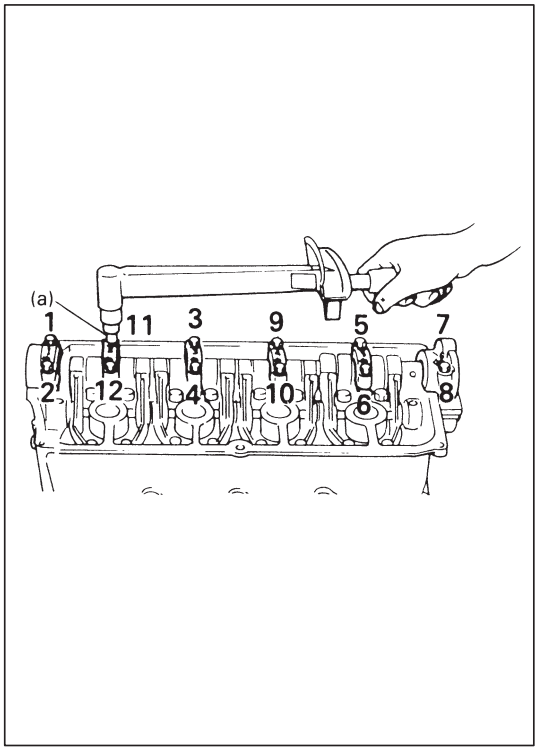

Check clearance by using plasticgauge.
The procedure is as follows.

1) Clean housings and camshaft journals.
2) Install camshaft to cylinder head.
3) Place a piece of plasticgauge the full width of journal of camshaft (parallel to camshaft).
4) Install camshaft housing, referring to INSTALLATION of following page.
5) Tighten camshaft housing bolts in such order as indicated in figure a little at a time till they are tightened to specified torque.

Tightening Torque
(a): 11 N·m (1.1 kg-m, 8.0 lb-ft)

NOTE:
Do not rotate camshaft while plasticgange is installed.

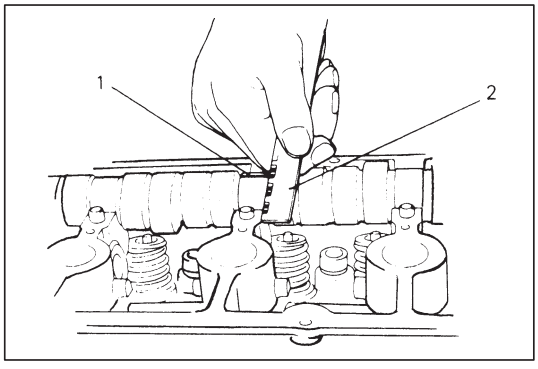

6) Remove housing and using scale (2) on plasticgauge envelope, measure plasticgauge (1) width at its widest point.

	Standard	Limit
Journal clearance	0.040 – 0.082 mm (0.0016 – 0.0032 in.)	0.12 mm (0.0047 in.)

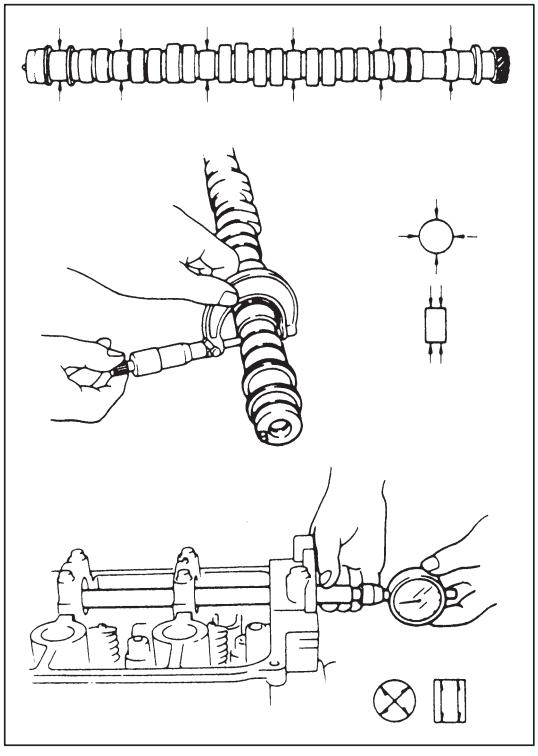

If measured camshaft journal clearance exceeds limit, measure journal (housing) bore and outside diameter of camshaft journal. Replace camshaft or cylinder head assembly whichever the difference from specification is greater.

Item	Standard
Camshaft journal bore die.	28.000 – 28.021 mm (1.1024 – 1.1031 in.)
Camshaft journal O.D.	27.939 – 27.960 mm (1.1000 – 1.1008 in.)

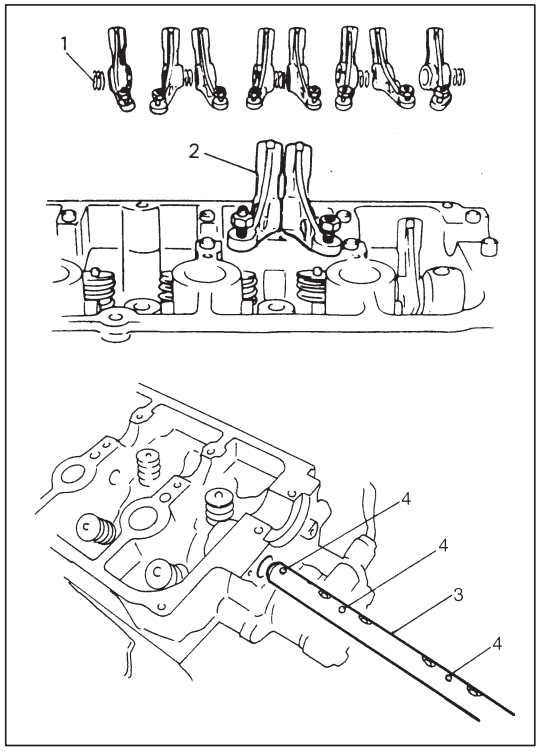

INSTALLATION

1) Apply engine oil to rocker arm shaft and rocker arms.
2) Install rocker arm shaft (3) with shaft bolt holes (4) facing up, rocker arm (exhaust side) (2) and rocker arm spring (1).

3) Check O-ring for damage or deterioration.
   Install O-ring to rocker arm shaft.

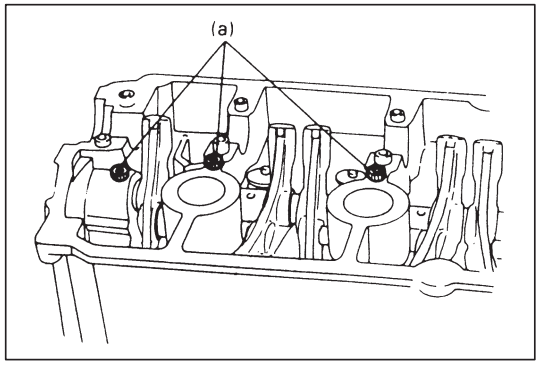

4) Install rocker arm shaft bolts and tighten them to specified torque.

   Tightening Torque
   (a): 11 N·m (1.1 kg-m, 8.0 lb-ft)

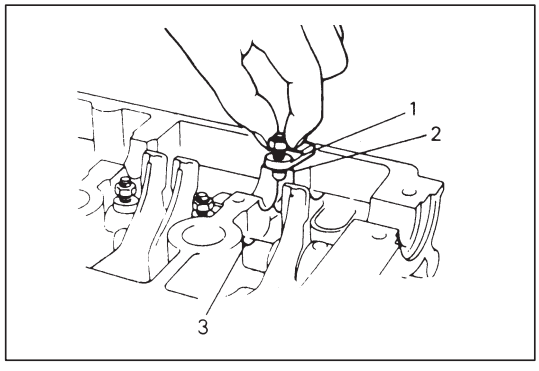

5) Fill small amount of engine oil into arm pivot holding part (3) of rocker arm shaft. Install rocker arm (intake side) (1) with clips (2) to rocker arm shaft.

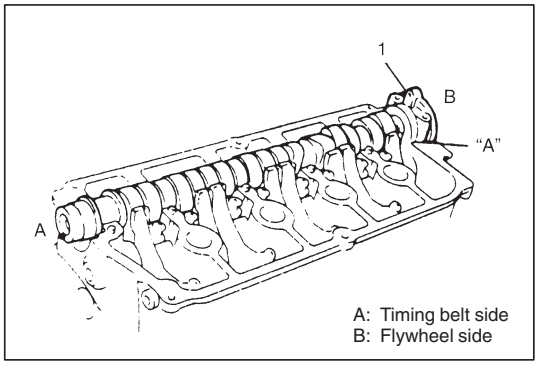

6) Apply engine oil to cams and journals on camshaft and put camshaft on cylinder head. Install camshaft housing to camshaft and cylinder head.
   - Apply engine oil to sliding surface of each housing against camshaft journal.
   - Apply sealant to mating surface of No.6 housing (1) which will mate with cylinder head.

   "A" Sealant: 99000-31110

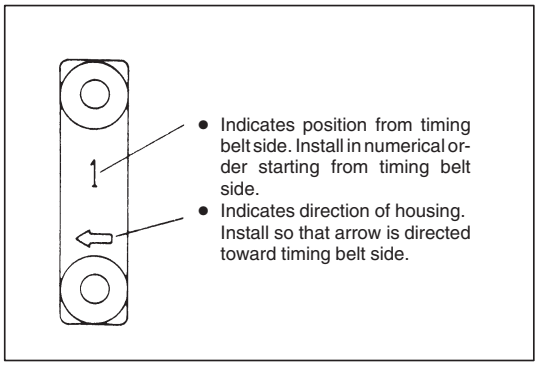

- Embossed marks are provided on each camshaft housing, indicating position and direction for installation.
  Install housings as indicated by these marks.
- As camshaft housing No.1 retains camshaft in proper position as to thrust direction, make sure to first fit No.1 housing to No.1 journal of camshaft securely.

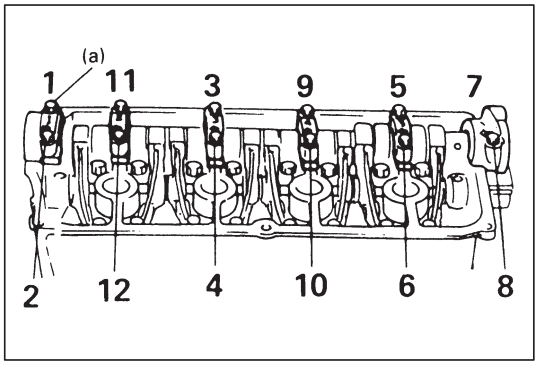

- After applying engine oil to housing bolts, tighten them temporarily first. Then tighten them by following sequence as indicated in figure.
  Tighten a little at a time and evenly among bolts and repeat tightening sequence two to three times before they are tightened to specified torque.

  Tightening Torque
  (a): 11 N·m (1.1 kg-m, 8.0 lb-ft)

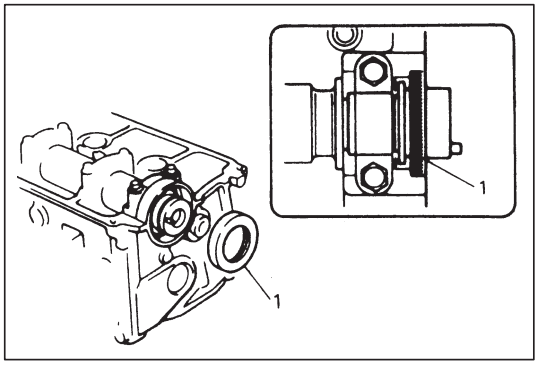

7) Install camshaft oil seal (1).
   After applying engine oil to oil seal lip, press-fit camshaft oil seal till oil seal surface becomes flush with housing surface.

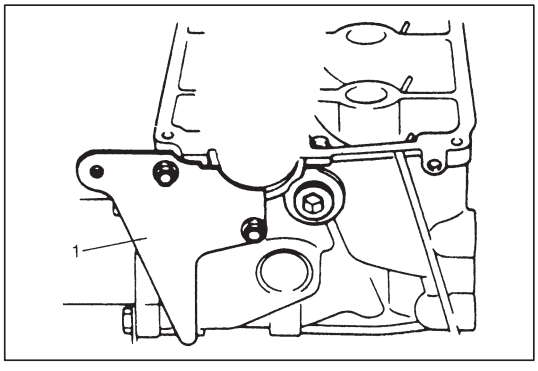

8) Install timing belt inside cover (1).

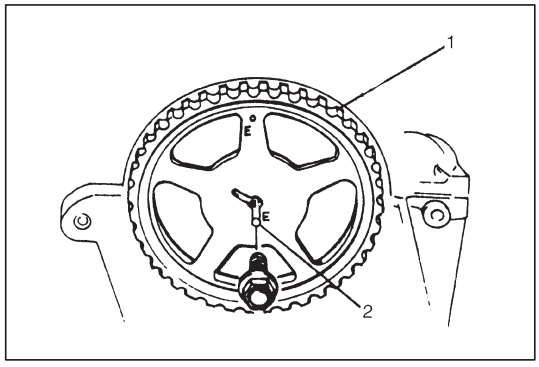

9) Install camshaft timing belt pulley (1) to camshaft while fitting pin (2) on camshaft into slot at “E” mark.

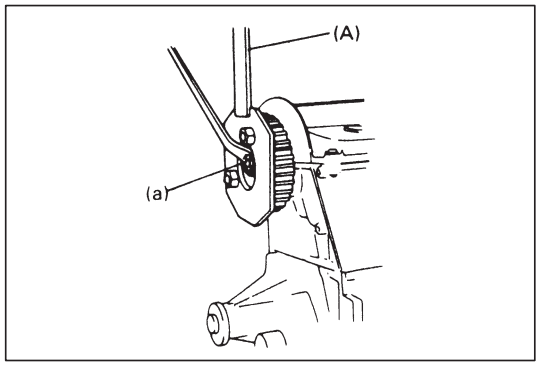

10) Using special tool, tighten pulley bolt to specified torque.

Tightening Torque
(a): 60 N·m (6.0 kg-m, 43.5 lb-ft)

Special Tool
(A): 09917-68220

11) After place cylinder head cover on proper position, install belt tensioner, timing belt, outside cover, crankshaft pulley, water pump belt and engine right mounting bracket and stiffener as previously outlined.
12) Remove cylinder head cover.

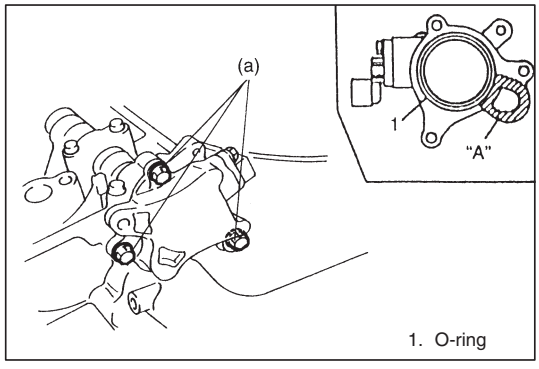

13) After applying sealant to part “A” as shown in figure at the left, install CMP sensor case to cylinder head and tighten its fixing bolts to specified torque.

“A” Sealant: 99000-31110

Tightening Torque
(a): 11 N·m (1.1 kg-m, 8.0 lb-ft)

Connect CMP sensor connector.

14) Adjust valve clearance as previously outlined.
15) Install cylinder head cover.
16) After install battery tray and battery, connect positive and negative cables at battery.
17) Confirm that ignition timing is within specification referring to “IGNITION SYSTEM” section.

VALVES AND CYLINDER HEAD

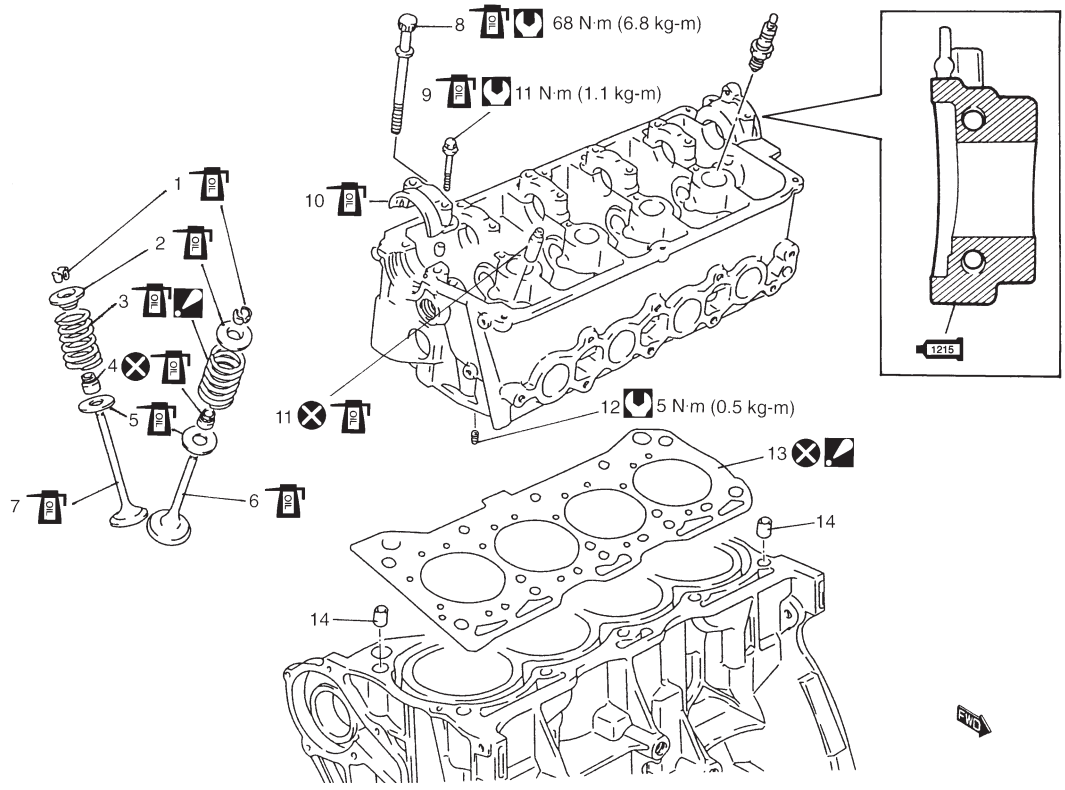

1. Valve cotters:
   Apply engine oil.
2. Valve spring retainer:
   Apply engine oil.
3. Valve spring:
   Apply engine oil.
   Be sure to position spring in place with its bottom end (small-pitch end) facing the bottom (valve spring seat side).
4. Valve stem seal:
   Apply engine oil.
5. Valve spring seat:
   Apply engine oil.
6. Exhaust valve:
   Apply engine oil to valve stem.
7. Intake valve:
   Apply engine oil to valve stem.
8. Cylinder head bolt:
   Apply engine oil.
9. Camshaft housing bolt:
   Apply engine oil.
10. Camshaft housing:
    Apply engine oil to sliding surface of each housing against camshaft journal.
    Apply sealant to mating surface of No.6 housing.
11. Valve guide:
    Apply engine oil to valve guide bore.
12. Oil venturi plug
13. Cylinder head gasket:
    “TOP” mark provided on gasket comes to crankshaft pulley side, facing up (toward cylinder head side).
14. Dowel pin

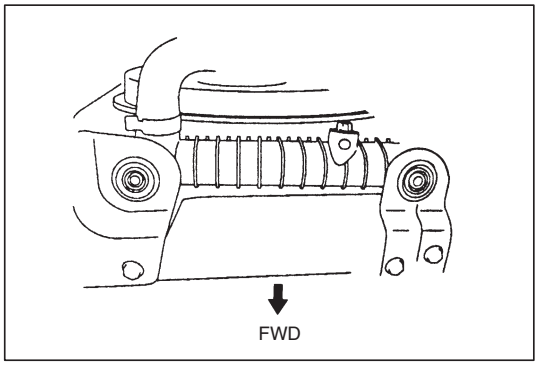

REMOVAL

1) Relieve fuel pressure according to procedure described in Section 6.
2) Disconnect negative cable at battery.
3) Drain cooling system.
4) Remove air cleaner outlet hose No.1 and No.2 with intake joint and suction pipe as previously outlined.

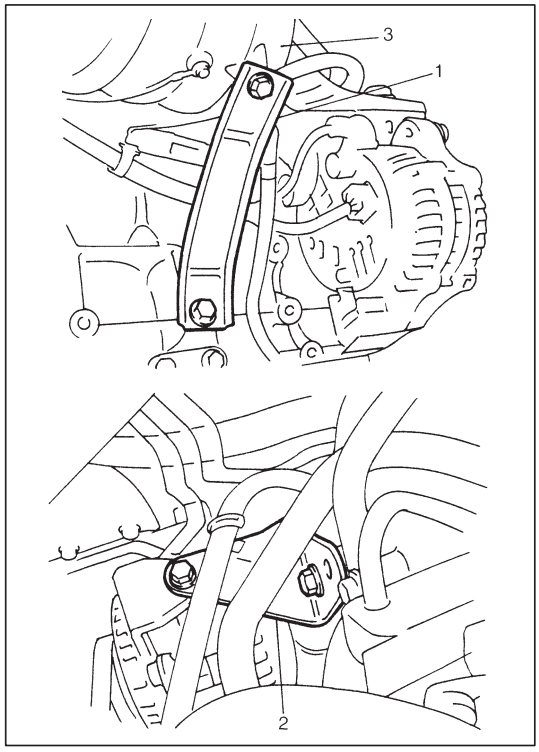

5) Remove intake manifold rear stiffener (1) and generator adjust arm reinforcement (2) from intake manifold (3).

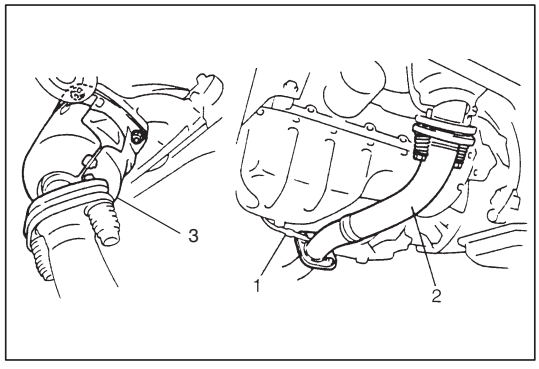

6) Disconnect oxygen sensor No.2 coupler (1) and remove exhaust No.1 pipe (2) with catalytic converter case (3).

7) Disconnect following electric wires:
   - MAP sensor
   - CMP sensor
   - Engine oil pressure switch
   - Ignition coil assembly
   - ECT sensor
   - Ground wire from intake manifold and cylinder head
   - Injectors
   - TP sensor
   - IAC valve
   - Oxygen sensor (if equipped)
   - EVAP canister purge valve (if equipped)

   and then release above wire harnesses from clamps.
8) Disconnect following hoses:
   - Canister purge hose from EVAP canister purge valve
   - Radiator inlet hose from thermostat case
   - Brake booster hose from intake manifold
   - Heater inlet hose from pipe
   - Throttle body outlet hose from throttle body
9) Disconnect accelerator cable from throttle body and each clamp.

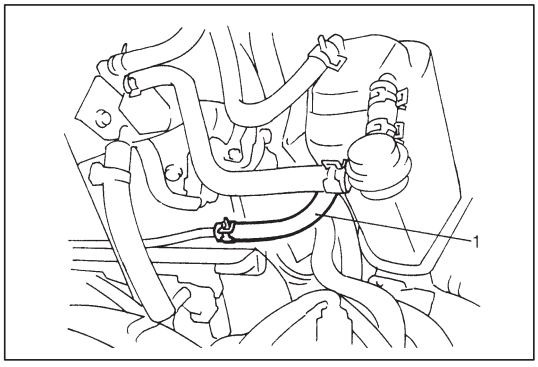

10) Disconnect fuel feed hose (1) from fuel delivery pipe.

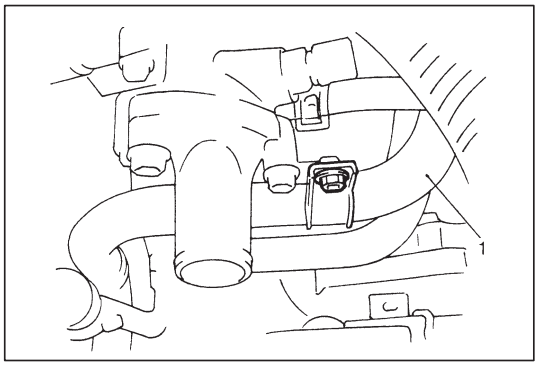

11) Disconnect water inlet pipe (1) from its bracket.

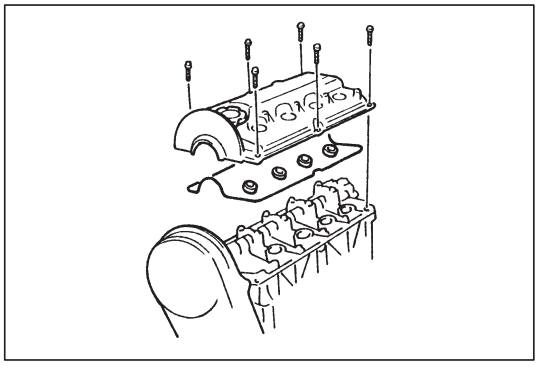

12) Remove cylinder head cover as previously outlined.
Loosen all valve lash adjusting screws fully.

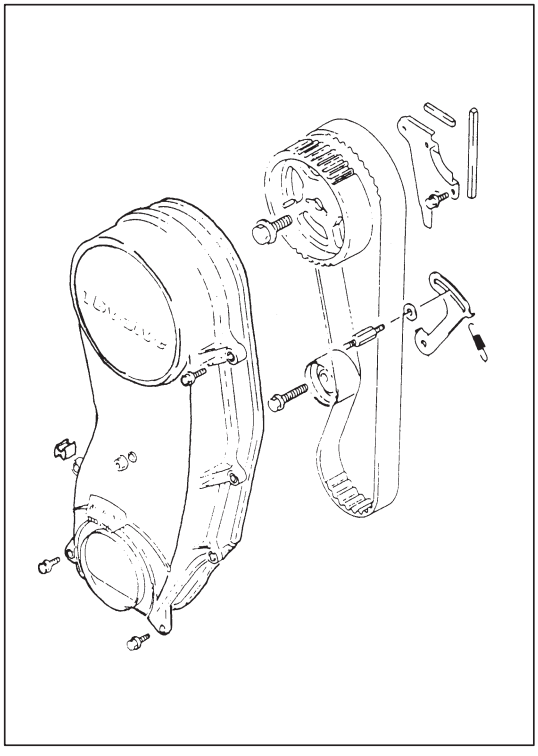

13) Remove timing belt and camshaft as previously outlined.

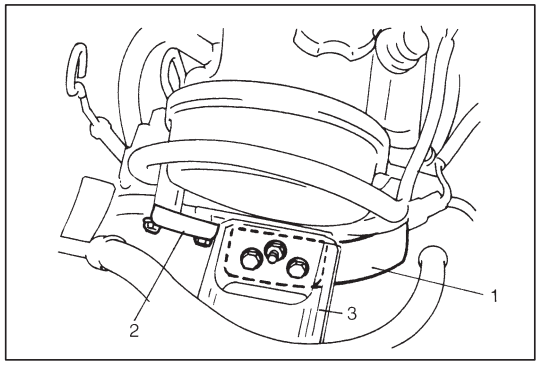

14) Install engine right mounting bracket (1), stiffener (2) and engine right mounting swing bracket (3).
15) Remove support device.

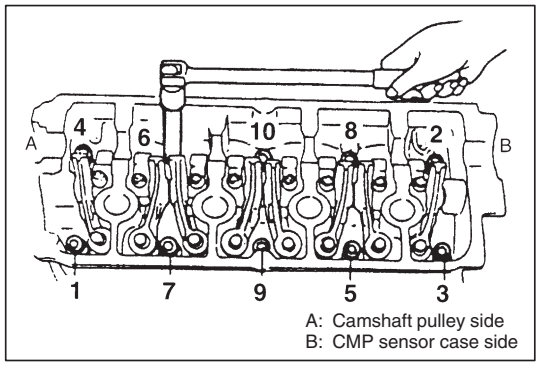

16) Loosen cylinder head bolts in such order as indicated in figure and remove them.
17) Check all around cylinder head for any other parts required to be removed or disconnected and remove or disconnect whatever necessary.

18) Remove cylinder head with thermostat case, intake manifold and exhaust manifold.

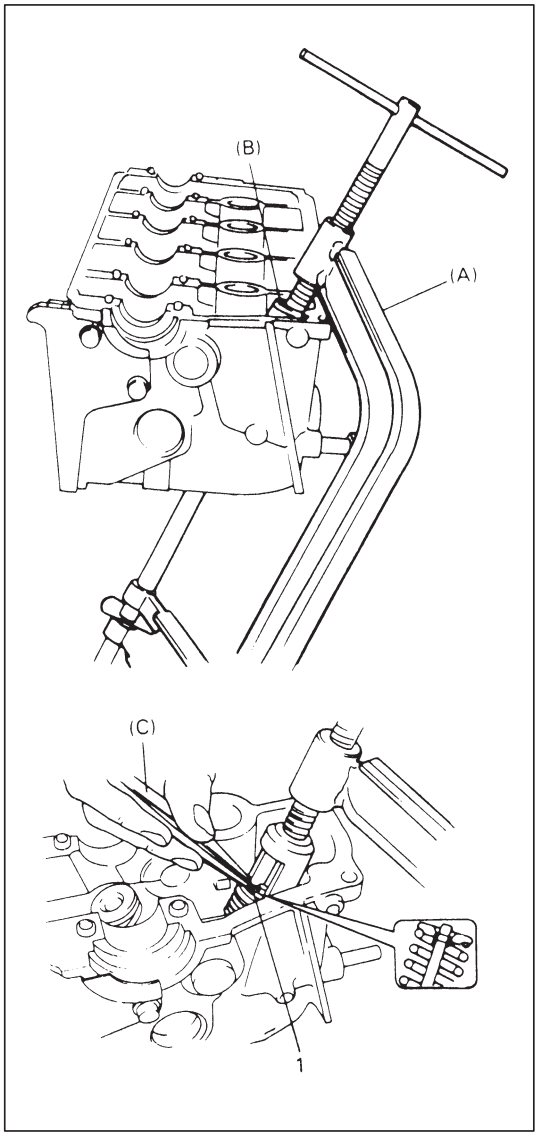

DISASSEMBLY

1) For ease in servicing cylinder head, remove thermostat case, intake manifold with throttle body and exhaust manifold from cylinder head.
2) Remove rocker arms and springs by pulling its shaft out to transmission side.
3) Using special tool (Valve lifter), compress valve springs and then remove valve cotters (1) by using special tool (Forceps) as shown.

   Special Tool
   (A): 09916-14510
   (B): 09916-14910
   (C): 09916-84511

4) Release special tool, and remove spring retainer and valve spring.
5) Remove valve from combustion chamber side.

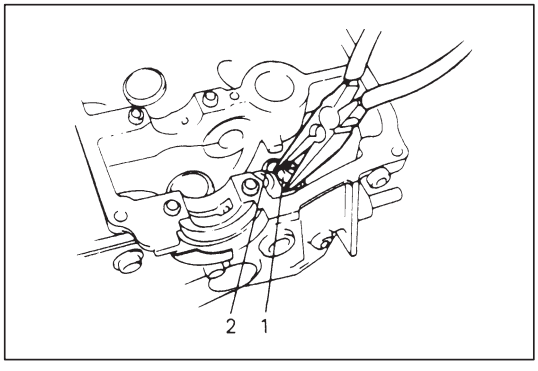

6) Remove valve stem oil seal (1) from valve guide and then valve spring seat (2).

   NOTE:
   Do not reuse oil seal once disassembled. Be sure to use new oil seal when assembling.

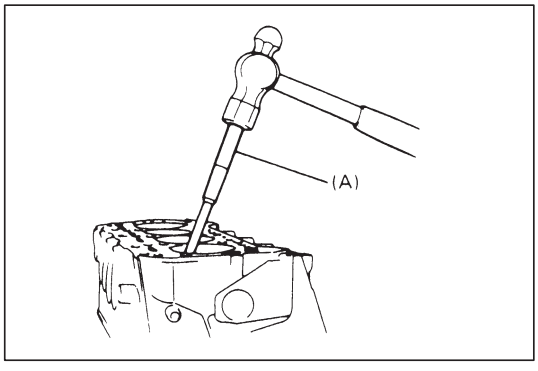

7) Using special tool (Valve guide remover), drive valve guide out from combustion chamber side to valve spring side.

   Special Tool
   (A): 09916-44910

   NOTE:
   Do not reuse valve guide once disassembled. Be sure to use new valve guide (Oversize) when assembling.

8) Place disassembled parts except valve stem seal and valve guide in order, so that they can be installed in their original position.

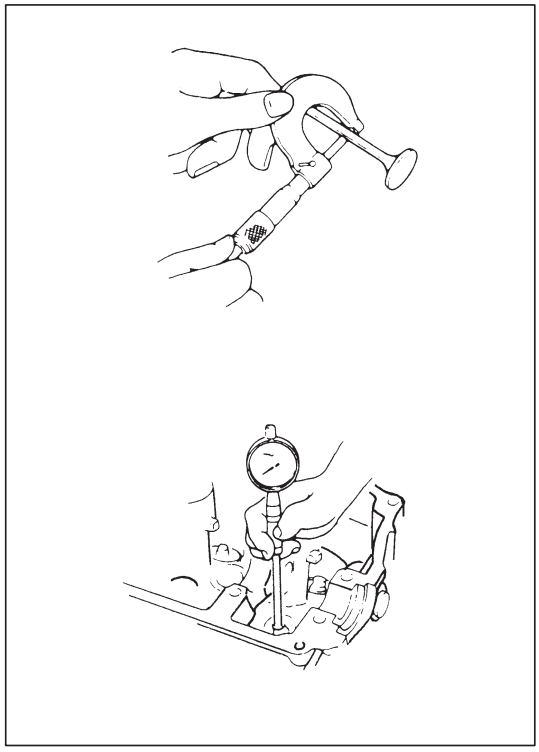

INSPECTION

Valve Guides

Using a micrometer and bore gauge, take diameter readings on valve stems and guides to check stem-to-guide clearance.
Be sure to take reading at more than one place along the length of each stem and guide.
If clearance exceeds limit, replace valve and valve guide.

Item		Standard	Limit
Valve stem diameter	In	5.465 – 5.480 mm (0.2152 – 0.2157 in.)	–
	Ex	5.440 – 5.455 mm (0.2142 – 0.2148 in.)	–
Valve guide I.D.	In	5.500 – 5.512 mm (0.2166 – 0.2170 in.)	–
	Ex		
Stem-to-guide clearance	In	0.020 – 0.047 mm (0.0008 – 0.0018 in.)	0.07 mm (0.0027 in.)
	Ex	0.045 – 0.072 mm (0.0018 – 0.0028 in.)	0.09 mm (0.0035 in.)

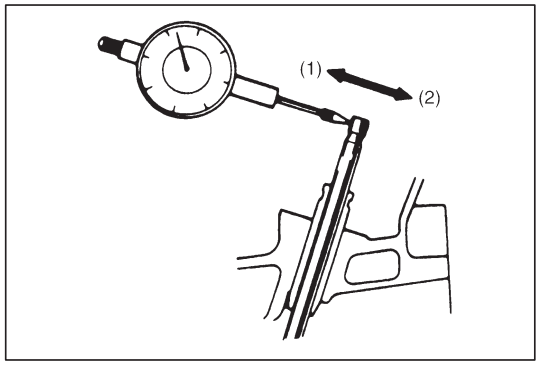

If bore gauge is not available, check end deflection of valve stem with a dial gauge instead.
Move stem end in directions (1) and (2) to measure end deflection.
If deflection exceeds its limit, replace valve stem and valve guide.

Valve stem end deflection limit	In	0.14 mm (0.005 in.)
	Ex	0.18 mm (0.007 in.)

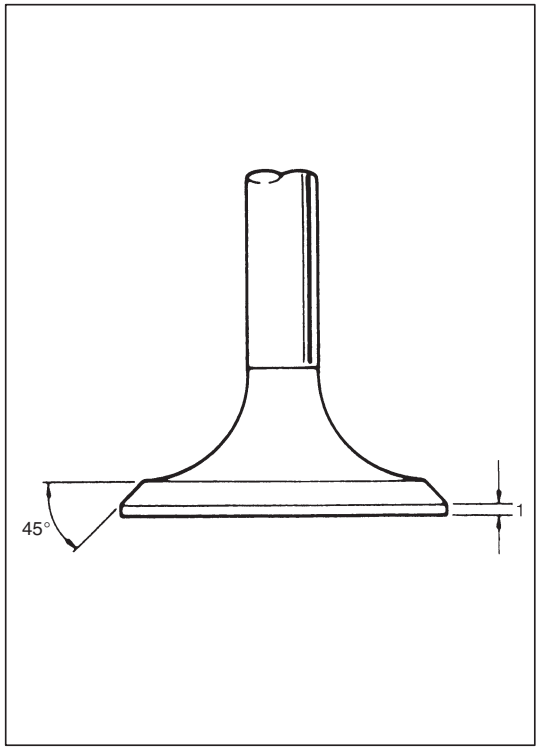

Valves

- Remove all carbon from valves.
- Inspect each valve for wear, burn or distortion at its face and stem and, as necessary, replace it.
- Measure thickness (1) of valve head. If measured thickness exceeds limit, replace valve.

Valve head thickness		
	Standard	Limit
IN	0.8 – 1.2 mm (0.03 – 0.047 in.)	0.6 mm (0.024 in.)
EX		0.7 mm (0.027 in.)

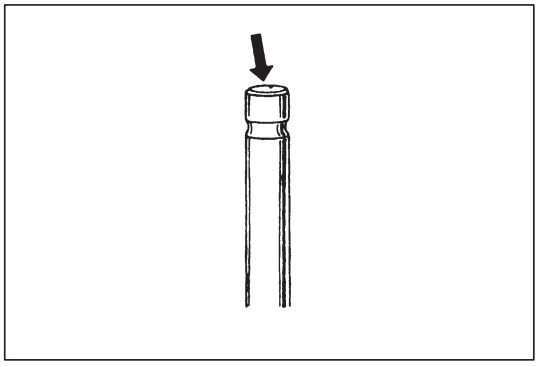

- Inspect valve stem end face for pitting and wear. If pitting or wear is found there, valve stem end may be resurfaced, but not so much as to grind off its chamfer. When it is worn so much that its chamfer is gone, replace valve.

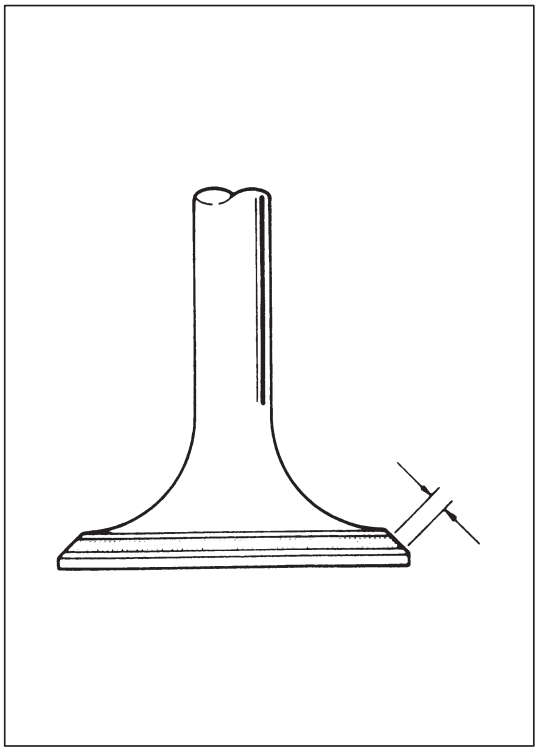

- Seating contact width:
  Create contact pattern on each valve in the usual manner, i.e., by giving uniform coat of marking compound to valve seat and by rotatingly tapping seat with valve head. Valve lapper (tool used in valve lapping) must be used.

  Pattern produced on seating face of valve must be a continuous ring without any break, and the width of pattern must be within specified range.

Standard seating width revealed by contact pattern on valve face	In	1.1 – 1.3 mm (0.0433 – 0.0512 in.)
	Ex	

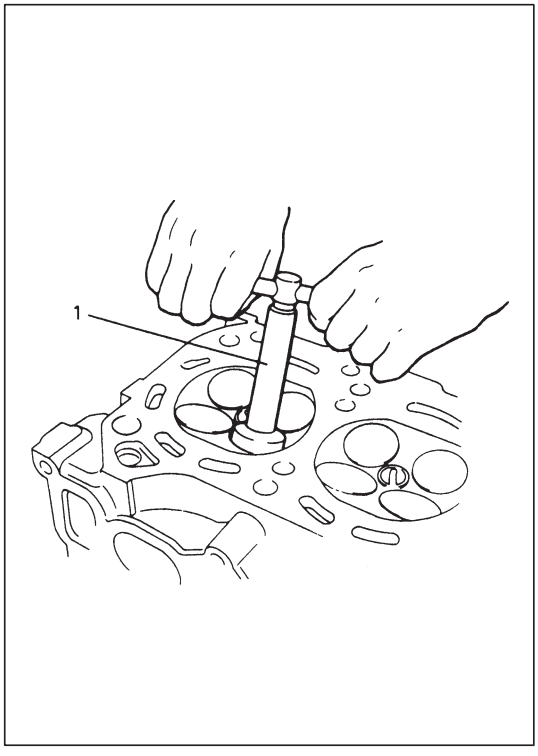

- Valve seat repair:
  A valve seat not producing a uniform contact with its valve or showing width of seating contact that is out of specified range must be repaired by regrinding or by cutting and regrinding and finished by lapping.
  1. EXHAUST VALVE SEAT: Use valve seat cutters (1) to make two cuts as illustrated in figure. Two cutters must be used: the first for making 15° angle, and the second for making 45° angle. The second cut must be made to produce desired seat width.

     Seat width for exhaust valve seat:
     1.1 – 1.3 mm (0.0433 – 0.0512 in.)

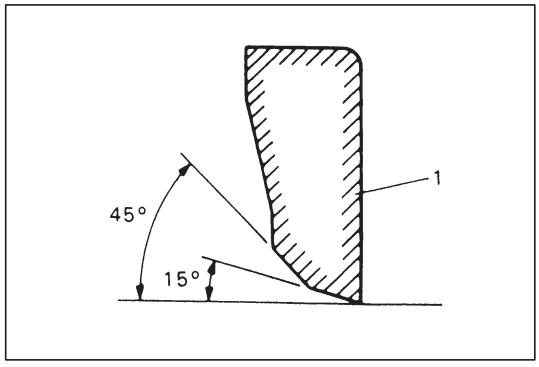

2. INTAKE VALVE SEAT: Cutting sequence is the same as for exhaust valve seats (1).

   Seat width for intake valve seat:
   1.1 – 1.3 mm (0.0433 – 0.0512 in.)

3. VALVE LAPPING: Lap valve on seat in two steps, first with coarse size lapping compound applied to face and the second with fine-size compound, each time using valve lapper according to usual lapping method.

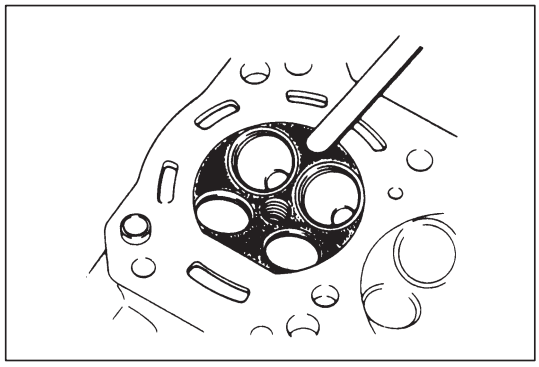

Cylinder Head

- Remove all carbon from combustion chambers.

  NOTE:
  Do not use any sharp-edged tool to scrape off carbon. Be careful not to scuff or nick metal surfaces when decarboning. The same applies to valves and valve seats, too.

- Check cylinder head for cracks in intake and exhaust ports, combustion chambers, and head surface.

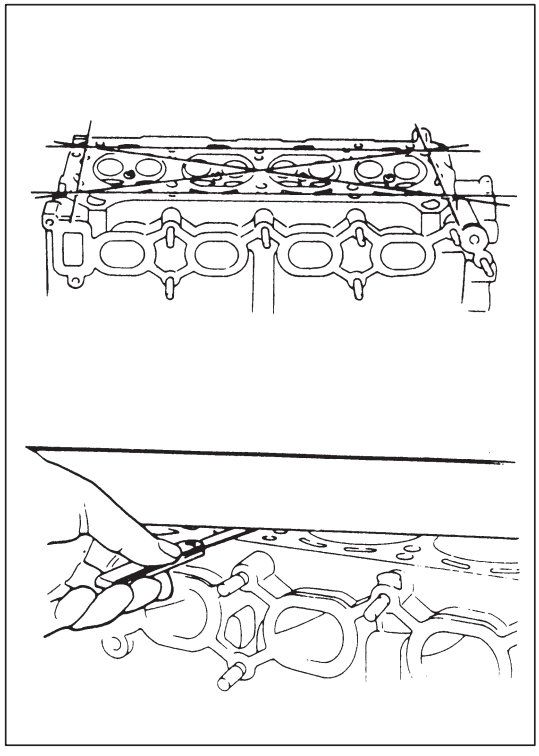

- Flatness of gasketed surface:
  Using a straightedge and thickness gauge, check surface at a total of 6 locations. If distortion limit, given below, is exceeded, correct gasketed surface with a surface plate and abrasive paper of about #400 (Waterproof silicon carbide abrasive paper): place paper on and over surface plate, and rub gasketed surface against paper to grind off high spots. Should this fail to reduce thickness gauge readings to within limit, replace cylinder head.
  Leakage of combustion gases from this gasketed joint is often due to warped gasketed surface: such leakage results in reduced power output.

  Limit of distortion: 0.05 mm (0.002 in.)

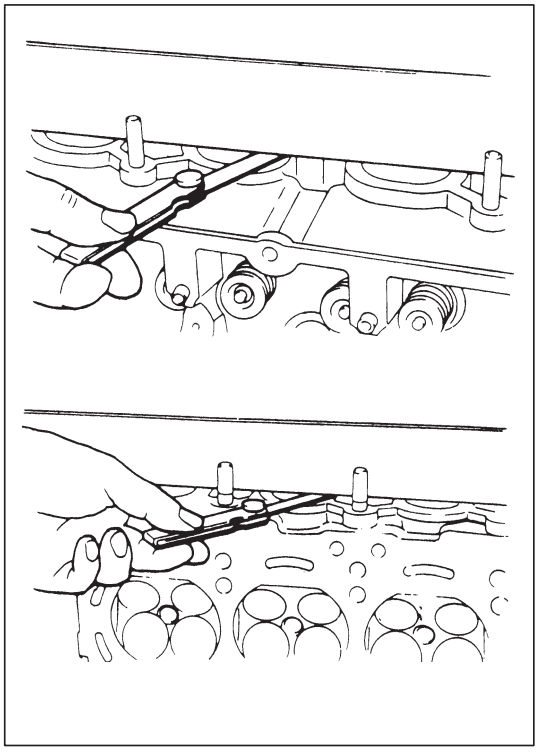

- Distortion of manifold seating faces:
  Check seating faces of cylinder head for manifolds, using a straightedge and thickness gauge, in order to determine whether these faces should be corrected or cylinder head replaced.

  Limit of distortion: 0.10 mm (0.004 in.)

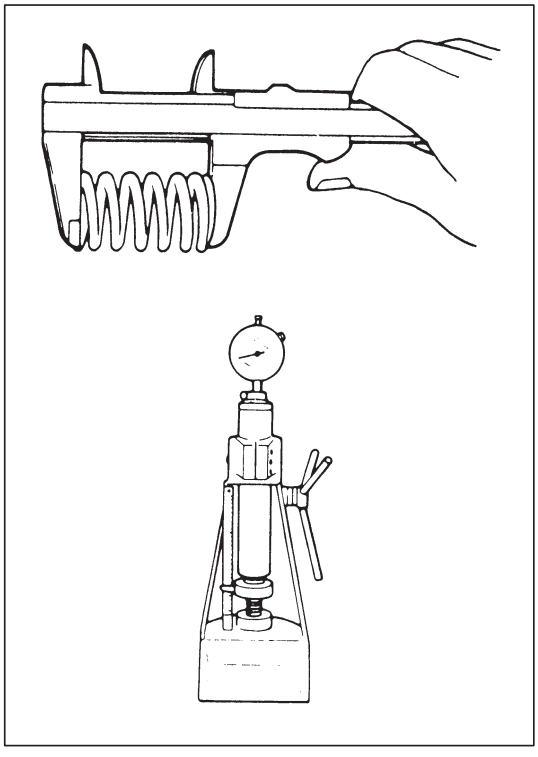

Valve Springs

- Referring to data given below, check to be sure that each spring is in sound condition, free of any evidence of breakage or weakening. Remember, weakened valve springs can cause chatter, not to mention possibility of reducing power output due to gas leakage caused by decreased seating pressure.

Item	Standard	Limit
Valve spring free length	36.83 mm (1.4500 in.)	35.67 mm (1.4043 in.)
Valve spring preload	10.7 – 12.5 kg for 31.5 mm (23.6 – 27.5 lb/ 1.24 in.)	9.3 kg for 31.5 mm (20.5 lb/1.24 in.)

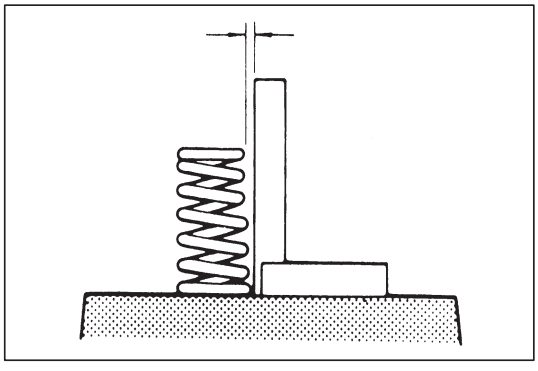

- Spring squareness:
  Use a square and surface plate to check each spring for squareness in terms of clearance between end of valve spring and square. Valve springs found to exhibit a larger clearance than limit given below must be replaced.

  Valve spring squareness limit: 1.6 mm (0.063 in.)

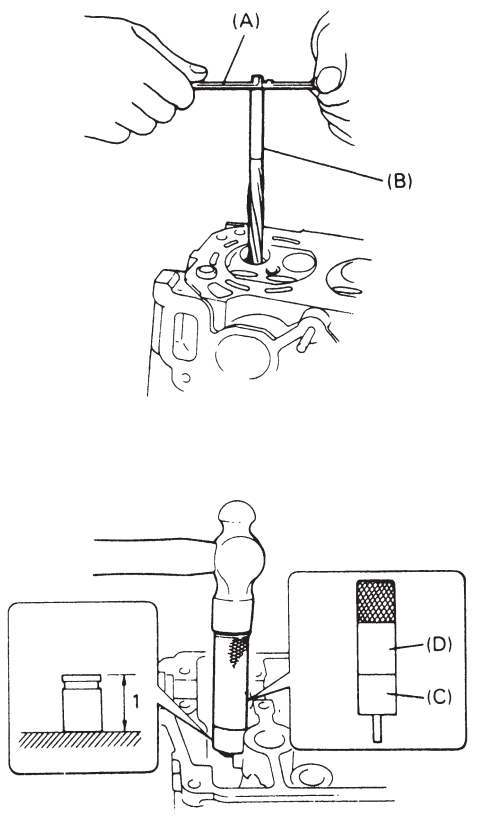

1. Valve guide protrusion (11.5 mm)

ASSEMBLY

1) Before installing valve guide into cylinder head, ream guide hole with special tool (11 mm reamer) so remove burrs and make it truly round.

   Special Tool
   (A): 09916-34541
   (B): 09916-38210

2) Install valve guide to cylinder head.
   Heat cylinder head uniformly at a temperature of 80 to 100°C (176 to 212°F) so that head will not be distorted, and drive new valve guide into hole with special tools.
   Drive in new valve guide until special tool (Valve guide installer) contacts cylinder head.
   After installing, make sure that valve guide protrudes by 11.5 mm (0.45 in.) from cylinder head.

   Special Tool
   (C): 09916-56011
   (D): 09916-58210

   NOTE:
   - **Do not reuse valve guide once disassembled. Install new valve guide (Oversize).**
   - **Intake and exhaust valve guides are identical.**

   Valve guide oversize: 0.03 mm (0.0012 in.)
   Valve guide protrusion (In and Ex): 11.5 mm (0.45 in.)

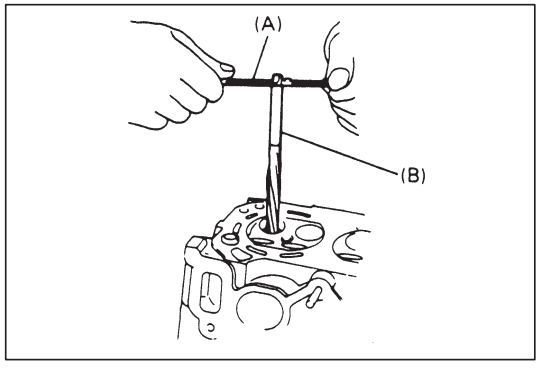

3) Ream valve guide bore with special tool (5.5 mm reamer). After reaming, clean bore.

   Special Tool
   (A): 09916-34541
   (B): 09916-34550

4) Install valve spring seat to cylinder head.

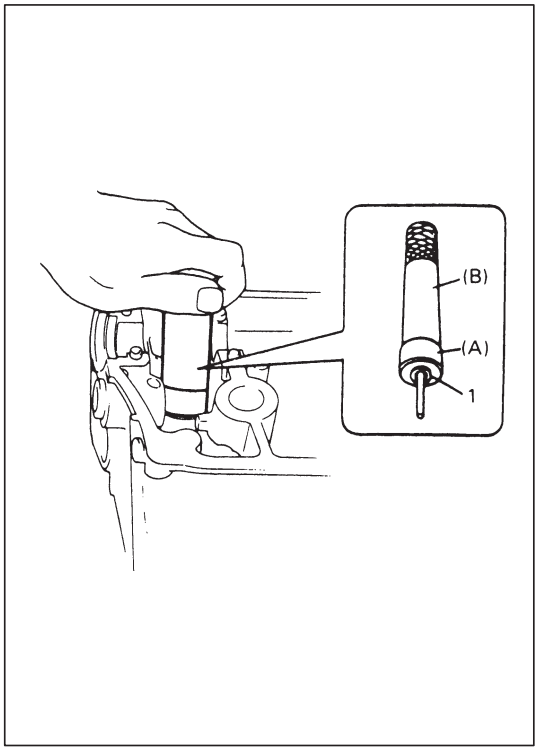

5) Install new valve stem seal (1) to valve guide.
After applying engine oil to seal and spindle of special tool (Valve guide installer handle), fit oil seal to spindle, and then install seal to valve guide by pushing special tool by hand.
After installing, check to be sure that seal is properly fixed to valve guide.

Special Tool
(A): 09917-98221
(B): 09916-58210

NOTE:
- **Do not reuse seal once disassembled. Be sure to install new seal.**
- **When installing, never tap or hit special tool with a hammer or else. Install seal to guide only by pushing special tool by hand. Tapping or hitting special tool may cause damage to seal.**

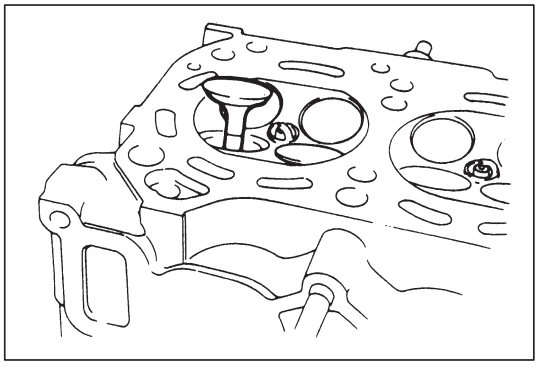

6) Install valve to valve guide.
Before installing valve to valve guide, apply engine oil to stem seal, valve guide bore, and valve stem.

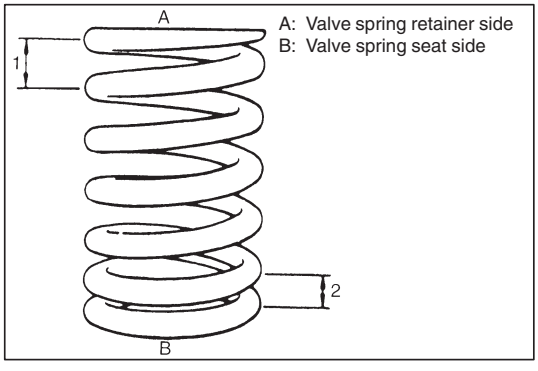

7) Install valve spring and spring retainer.
Each valve spring has top end (large-pitch (1) end) and bottom end (small-pitch (2) end). Be sure to position spring in place with its bottom end (small-pitch end) facing the bottom (valve spring seat side).

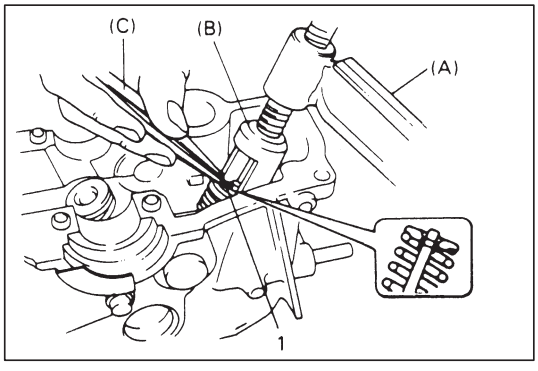

8) Using special tool (Valve lifter), compress valve spring and fit two valve cotters (1) into groove in valve stem.

Special Tool
(A): 09916-14510
(B): 09916-14910
(C): 09916-84511

9) Install rocker arms, springs, rocker arm shaft as previously outlined.
10) Install thermostat case, intake manifold and exhaust manifold.

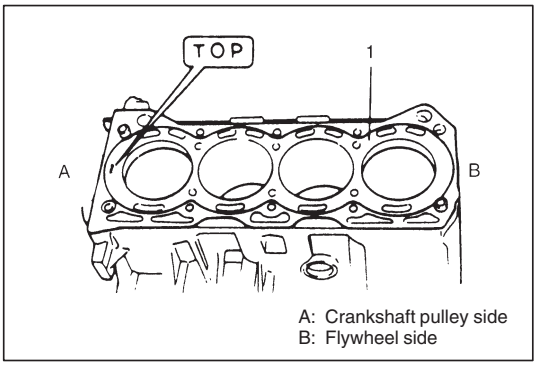

INSTALLATION

1) Remove old gasket and oil on mating surfaces and install new head gasket (1) as shown in figure, that is, “TOP” mark provided on gasket comes to crankshaft pulley side, facing up (toward cylinder head side).

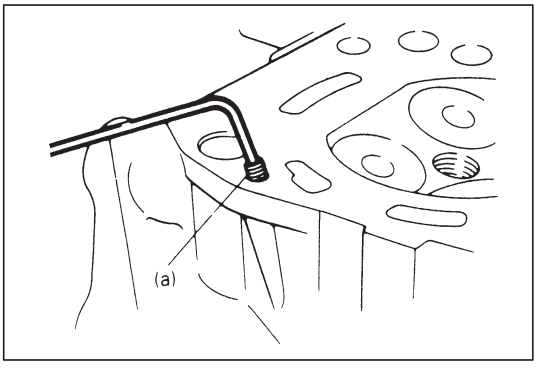

2) Check to make sure that oil jet (venturi plug) is installed and if it is, that it is not clogged.
When installing it, be sure to tighten to specified torque.

Tightening Torque
(a): 3.5 N·m (0.35 kg-m, 2.5 lb-ft)

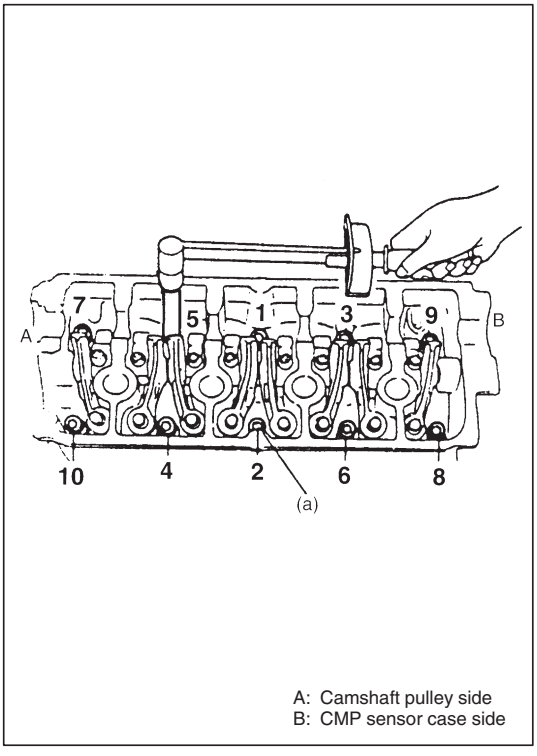

3) Apply engine oil to cylinder head bolts and tighten them gradually as follows.
   a) Tighten all bolts to 35 N·m (3.5 kg-m, 25.0 lb-ft) according to numerical order in figure.
   b) In the same manner as in a), tighten them to 55 N·m (5.5 kg-m, 40.0 lb-ft).
   c) Loosen all bolts until tightening torque is reduced to 0 (zero) in reverse order of tightening.
   d) In the same manner as in a), tighten them to 35 N·m (3.5 kg-m, 25.0 lb-ft).
   e) In the same manner as in a) again, tighten them to specified torque.

Tightening Torque
(a): 68 N·m (6.8 kg-m, 49.5 lb-ft)

4) Reverse removal procedure for installation, nothing the following points.
   - Adjust drive belt tension, referring to “ENGINE COOLING” section.
   - Adjust A/C compressor belt tension, if equipped.
     Refer to Section 1B.
   - Adjust intake and exhaust valve lashes as previously outlined.
   - Adjust accelerator cable play. Refer to Section 6E.
   - Check to ensure that all removed parts are back in place.
     Reinstall any necessary parts which have not been reinstalled.
   - Refill cooling system referring Section 6B.
   - Connect negative cable at battery.
   - Confirm that ignition timing is within specification referring to “IGNITION SYSTEM” section.
   - Verify that there is no fuel leakage, water leakage and exhaust gas leakage at each connection.

PISTON, PISTON RINGS, CONNECTING RODS AND CYLINDERS

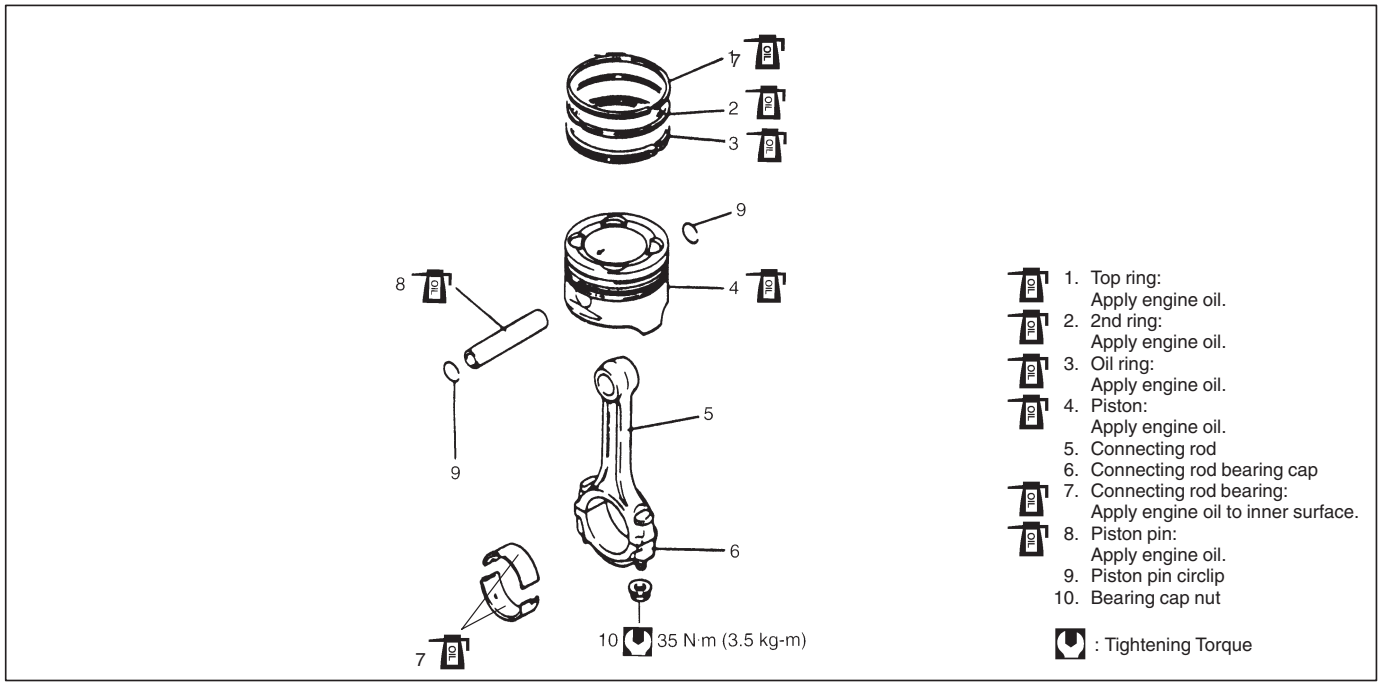

REMOVAL

1) Remove cylinder head from cylinder block as previously outlined.
2) Install engine right mounting bracket.
3) Drain engine oil.
4) Remove oil pan and oil pump strainer as previously outlined.
5) Mark cylinder number on all pistons, connecting rods and rod bearing caps, using silver pencil or quick drying paint.

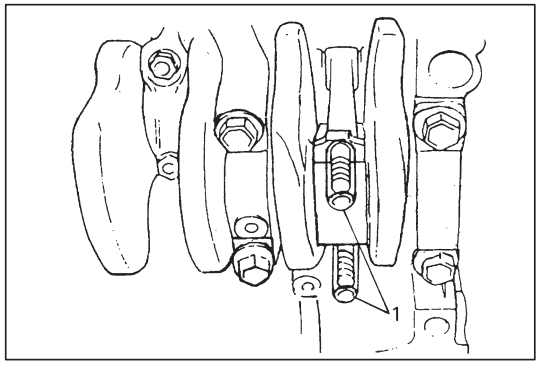

6) Remove rod bearing caps.
7) Install guide hose (1) over threads of rod bolts.
   This is to prevent damage to bearing journal and rod bolt threads when removing connecting rod.
8) Decarbon top of cylinder bore before removing piston from cylinder.
9) Push piston and connecting rod assembly out through the top of cylinder bore.

DISASSEMBLY

1) Using piston ring expander, remove two compression rings (Top and 2nd) and oil ring from piston.

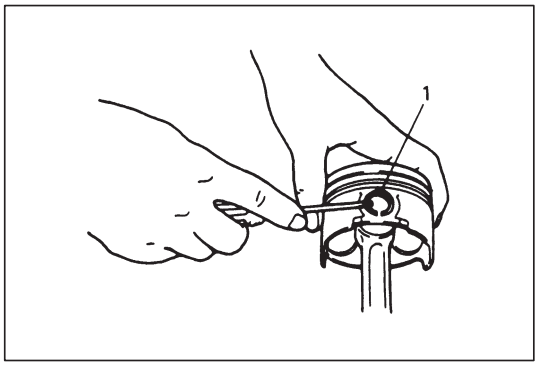

2) Remove piston pin from connecting rod.
   - Ease out piston pin circlips (1), as shown.

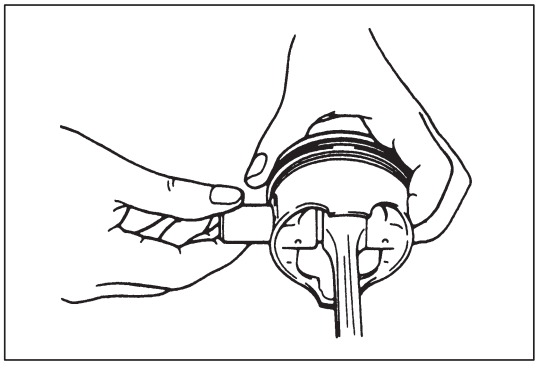

   - Force piston pin out.

CLEANING

Clean carbon from piston head and ring grooves, using a suitable tool.

INSPECTION

Cylinders

- Inspect cylinder walls for scratches, roughness, or ridges which indicate excessive wear. If cylinder bore is very rough or deeply scratched, or ridged, rebore cylinder and use oversize piston.

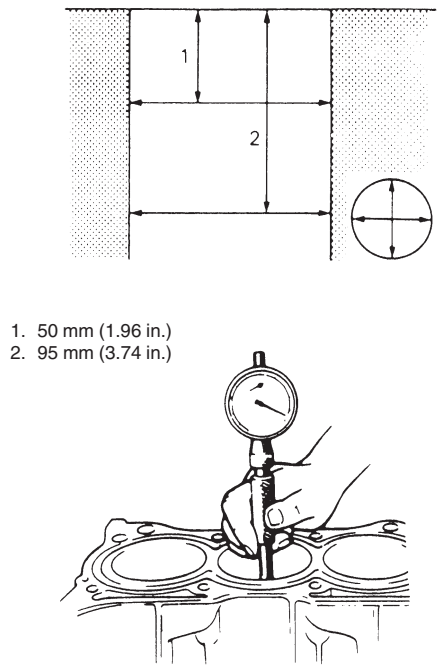

1. 50 mm (1.96 in.)
2. 95 mm (3.74 in.)

- Using a cylinder gauge, measure cylinder bore in thrust and axial directions at two positions as shown in figure.
  If any of following conditions is noted, rebore cylinder.
  1) Cylinder bore dia. exceeds limit.
  2) Difference of measurements at two positions exceeds taper limit.
  3) Difference between thrust and axial measurements exceeds out-of-round limit.

  Cylinder bore dia. limit: 74.15 mm (2.9196 in.)
  Tapper and out-of-round limit: 0.10 mm (0.0039 in.)

  NOTE:
  If any one of four cylinders has to be rebored, rebore all four to the same next oversize. This is necessary for the sake of uniformity and balance.

Pistons

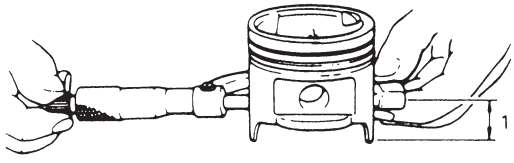

1. 23 mm (0.91 in.)

- Inspect piston for faults, cracks or other damaged.
  Damaged or faulty piston should be replaced.
- Piston diameter:
  As indicated in figure, piston diameter should be measured at a position 23 mm (0.91 in.) from piston skirt end in the direction perpendicular to piston pin.

Piston diameter	Standard	73.970 – 73.990 mm (2.9122 – 2.9130 in.)
	Oversize: 0.25 mm (0.0098 in.)	74.220 – 74.230 mm (2.9220 – 2.9224 in.)
	0.50 mm (0.0196 in.)	74.470 – 74.480 mm (2.9319 – 2.9323 in.)

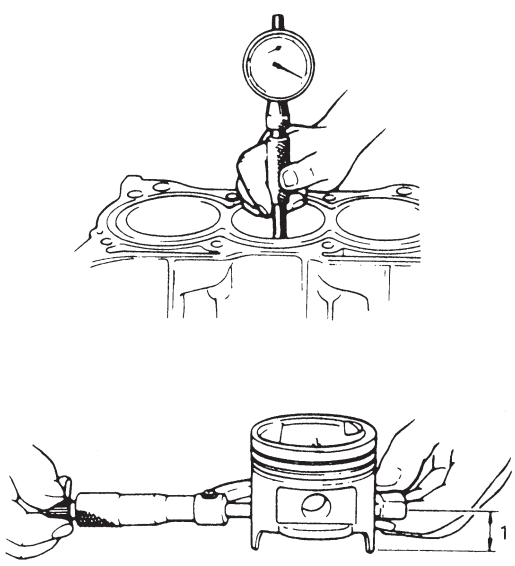

1. 23 mm (0.91 in.)

- Piston clearance:
  Measure cylinder bore diameter and piston diameter to find their difference which is piston clearance. Piston clearance should be within specification as given below. If it is out of specification, re-bore cylinder and use oversize piston.

  Piston clearance: 0.02 – 0.04 mm (0.0008 – 0.0015 in.)

  NOTE:
  Cylinder bore diameters used here are measured in thrust direction at two positions.

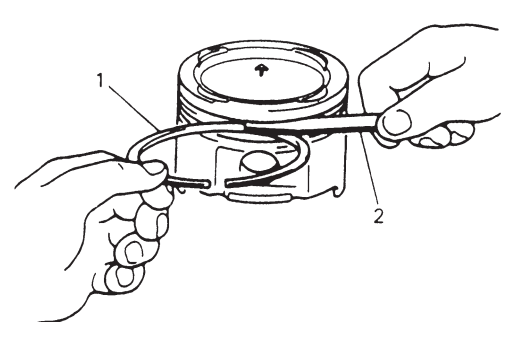

- Ring groove clearance:
  Before checking, piston grooves must be clean, dry and free of carbon.
  Fit new piston ring (1) into piston groove, and measure clearance between ring and ring land by using thickness gauge (2).
  If clearance is out of specification, replace piston.

  Ring groove clearance:
  Top: 0.03 – 0.07 mm (0.0012 – 0.0027 in.)
  2nd: 0.02 – 0.06 mm (0.0008 – 0.0023 in.)

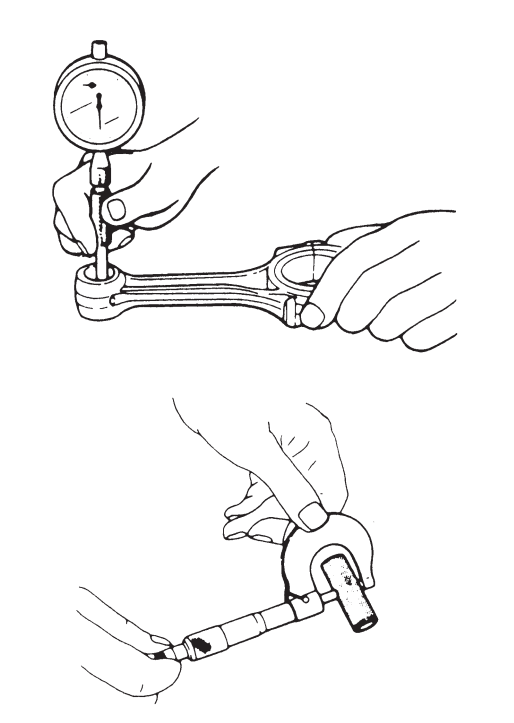

Piston pin

- Check piston pin, connecting rod small end bore and piston bore for wear or damage, paying particular attention to condition of small end bore bush. If pin, connecting rod small end bore or piston bore is badly worn or damaged, replace pin, connecting rod or piston.
- Piston pin clearance:
  Check piston pin clearance in small end. Replace connecting rod if its small end is badly worn or damaged or if measured clearance exceeds limit.

Item	Standard	Limit
Piston clearance in small end	0.003 – 0.016 mm (0.0001 – 0.0006 in.)	0.05 mm 0.0020 in.)

Small-end bore: 19.003 – 19.011 mm (0.7482 – 0.7486 in.)

Piston pin dia.: 18.995 – 19.000 mm (0.7479 – 0.7480 in.)

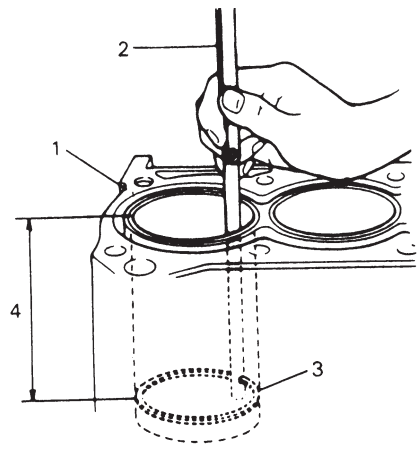

1. Cylinder block
2. Feeler gauge
3. Piston ring
4. 120 mm (4.72 in.)

Piston Rings

To measure end gap, insert piston ring into cylinder bore and then measure the gap by using thickness gauge.
If measured gap is out of specification, replace ring.

NOTE:
Decarbon and clean top of cylinder bore before inserting piston ring.

Item		Standard	Limit
Piston ring end gap	Top ring	0.15 – 0.30 mm (0.0059 – 0.0118 in.)	0.7 mm (0.0275 in.)
	2nd ring	0.2 – 0.35 mm (0.0079 – 0.0137 in.)	0.7 mm (0.0275 in.)
	Oil ring	0.2 – 0.7 mm (0.0079 – 0.0275 in.)	1.7 mm (0.0669 in.)

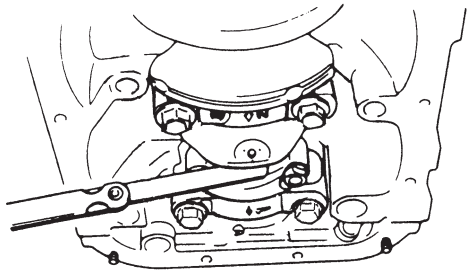

Connecting Rod

- Big-end side clearance:
  Check big-end of connecting rod for side clearance, with rod fitted and connected to its crank pin in the normal manner. If measured clearance is found to exceed its limit, replace connecting rod.

Item	Standard	Limit
Big-end side clearance	0.10 – 0.20 mm (0.0039 – 0.0078 in.)	0.35 mm (0.0137 in.)

- Connecting rod alignment:
  Mount connecting rod on aligner to check it for bow and twist and, if limit is exceeded, replace it.

  Limit on bow : 0.05 mm (0.0020 in.)
  Limit on twist: 0.10 mm (0.0039 in.)

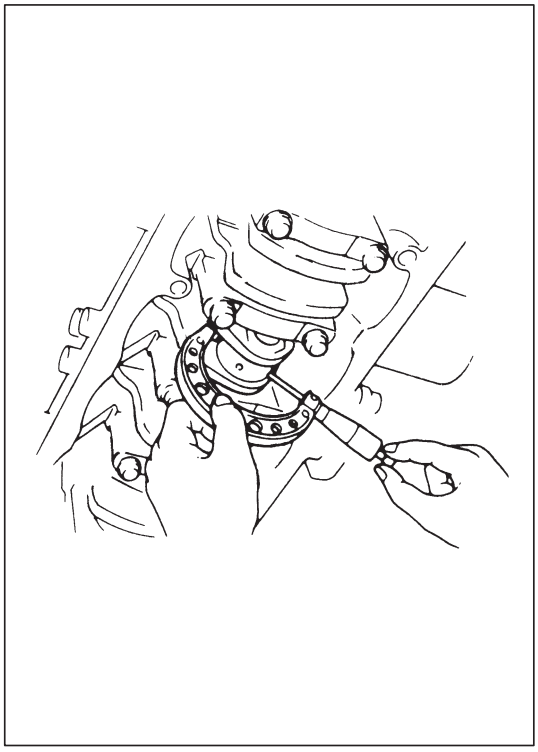

Crank Pin and Connecting Rod Bearings

- Inspect crank pin for uneven wear or damage. Measure crank pin for out-of-round or taper with a micrometer. If crank pin is damaged, or out-of-round or taper is out of limit, replace crankshaft or regrind crank pin to undersize and use undersize bearing.

Connecting rod bearing size	Crank pin diameter
Standard	41.982 – 42.000 mm (1.6528 – 1.6535 in.)
0.25 mm (0.0098 in.) undersize	41.732 – 41.750 mm (1.6430 – 1.6437 in.)

Out-of-round and taper limit: 0.01 mm (0.0004 in.)

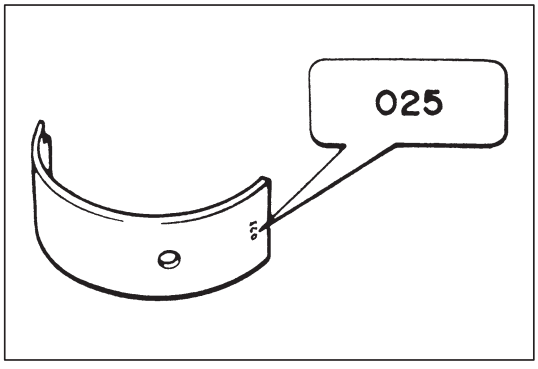

- Rod bearing:
  Inspect bearing shells for signs of fusion, pitting, burn or flaking and observe contact pattern. Bearing shells found in defective condition must be replaced.
  Two kinds of rod bearing are available; standard size bearing and 0.25 mm undersize bearing. To distinguish them, 0.25 mm undersize bearing has the stamped number (USO25) on its backside as indicated in figure, but standard size one has no number.

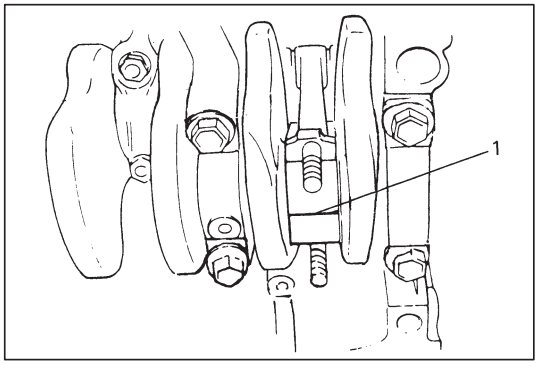

- Rod bearing clearance:
  1) Before checking bearing clearance, clean bearing and crank pin.
  2) Install bearing in connecting rod and bearing cap.
  3) Place a piece of plasticgauge (1) to full width of crankpin as contacted by bearing (parallel to crankshaft), avoiding oil hole.

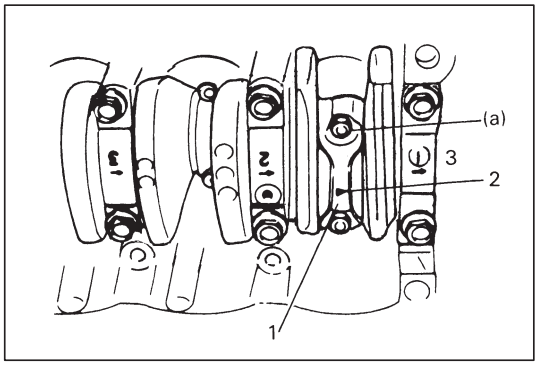

4) Install rod bearing cap (1) to connecting rod.
   When installing cap, be sure to point arrow mark (2) on cap to crankshaft pulley side (3), as shown in figure. After applying engine oil to rod bolts, tighten cap nuts to specified torque. DO NOT turn crankshaft with gaging plastic installed.

   Tightening Torque
   (a): 35 N·m (3.5 kg-m, 25.5 lb-ft)

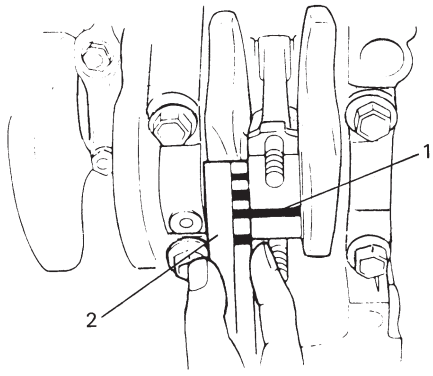

5) Remove cap and using a scale (2) on plasticgauge envelope, measure gaging plastic (1) width at the widest point (clearance).
If clearance exceeds its limit, use a new standard size bearing and remeasure clearance.

Item	Standard	Limit
Bearing clearance	0.020 – 0.050 mm (0.0008 – 0.0019 in.)	0.080 mm (0.0031 in.)

6) If clearance can not be brought to within its limit even by using a new standard size bearing, regrind crankpin to undersize and use 0.25 mm undersize bearing.

ASSEMBLY

NOTE:

Two sizes of piston are available as standard size spare part so as to ensure proper piston-to-cylinder clearance. When installing a standard size piston, make sure to match piston with cylinder as follows.

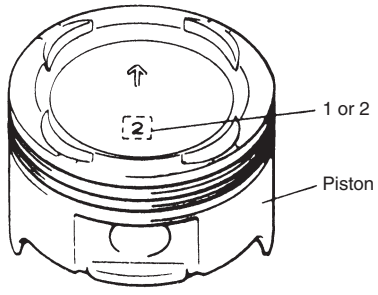

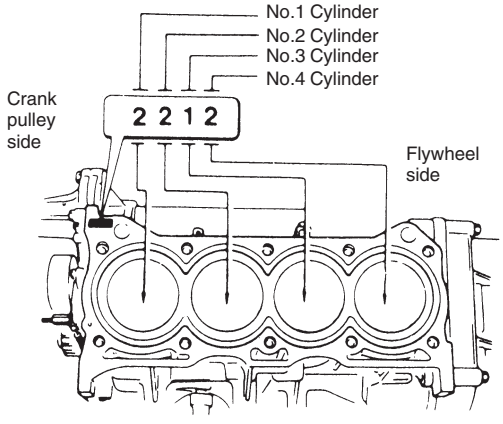

a) Each piston has stamped number 1 or 2 as shown. It represents outer diameter of piston.
b) There are also stamped numbers of 1 and 2 on the cylinder block as shown. The first number represents inner diameter of No.1 cylinder, the second number of No.2 cylinder, the third number of No.3 cylinder and the fourth number of No.4 cylinder.

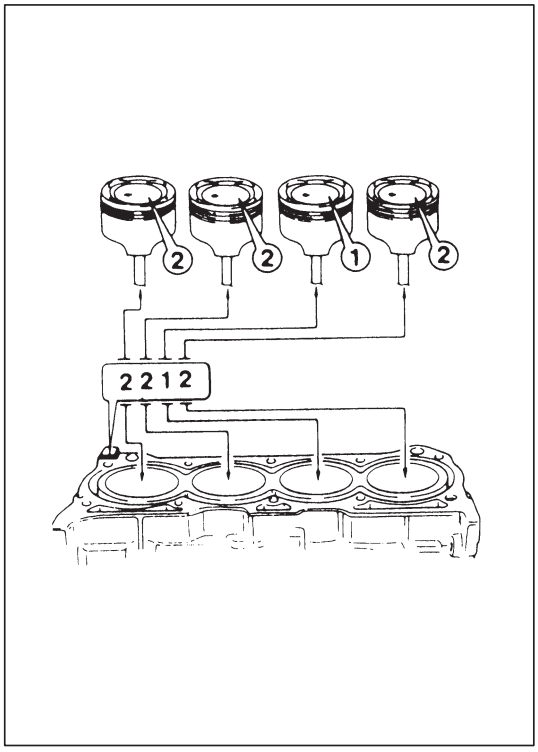

c) Stamped number on piston and that on cylinder block should correspond. That is, install number 2 stamped piston to cylinder which is identified with number 2 and a number 1 piston to cylinder with number 1.

Unit: mm (in.)

Piston		Cylinder		Piston-to-cylinder clearance
Number at the top (mark)	Outer diameter	Number (mark)	Bore diameter	
1	73.98 – 73 .99 (2.9126 – 2.9130)	1	74.01 – 74.02 (2.9138 – 2.9141)	0.02 – 0.04 (0.0008 – 0.0015)
2	73.97 – 73.98 (2.9122 – 2.9126)	2	74.00 – 74.01 (2.9134 – 2.9138)	

Also, a letter A, B or C is stamped on piston head but ordinarily it is not necessary to discriminate each piston by this letter.

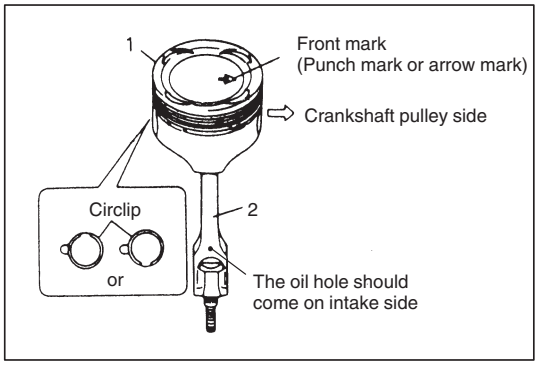

1) Install piston pin to piston (1) and connecting rod (2):
After applying engine oil to piston pin and piston pin holes in piston and connecting rod, fit connecting rod to piston as shown in figure and insert piston pin to piston and connecting rod, and install piston pin circlips.

NOTE:
Circlip should be installed with its cut part facing either up or down as shown in figure.

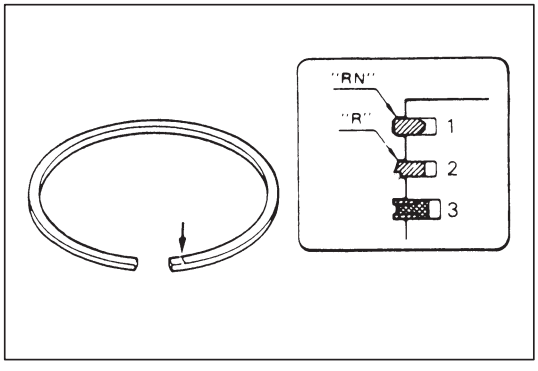

2) Install piston rings to piston:
- As indicated in figure at the left, 1st (1) and 2nd rings (2) have "RN" or "R" mark respectively. When installing these piston rings to piston, direct marked side of each ring toward top of piston.
- 1st ring differs from 2nd ring in thickness, shape and color of surface contacting cylinder wall.
  Distinguish 1st ring from 2nd ring by referring to figure.
- When installing oil ring (3), install spacer first and then two rails.

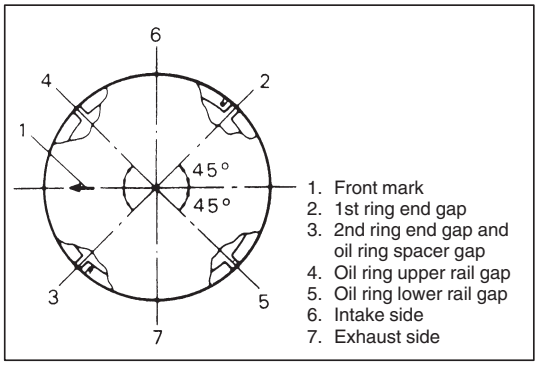

3) After installing three rings (1st, 2nd and oil rings), distribute their end gaps as shown in figure.

INSTALLATION OR CONNECTION

1) Apply engine oil to pistons, rings, cylinder walls, connecting rod bearings and crankpins.

NOTE:
Do not apply oil between connecting rod and bearing or between bearing cap and bearing.

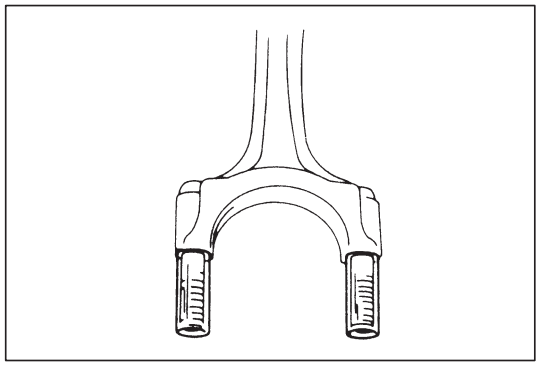

2) Install guide hoses over connecting rod bolts.
These guide hoses protect crank pin and threads of rod bolt from damage during installation of connecting rod and piston assembly.

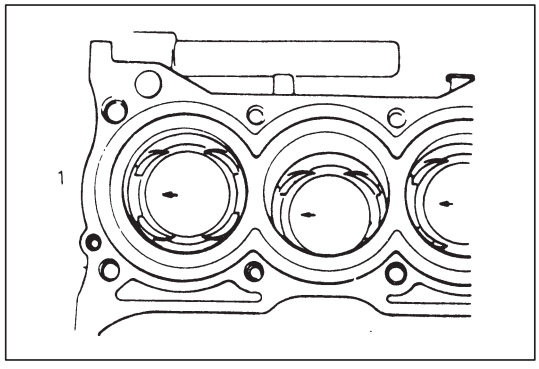

3) When installing piston and connecting rod assembly into cylinder bore, point front mark (punch mark or arrow mark) on piston head to crankshaft pulley side (1).

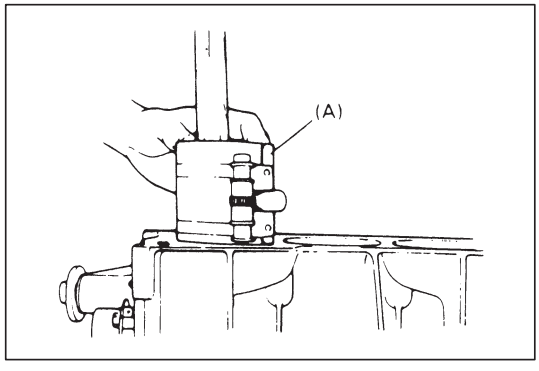

4) Install piston and connecting rod assembly into cylinder bore. Use special tool (Piston ring compressor) to compress rings. Guide connecting rod into place on crankshaft.
Using a hammer handle, tap piston head to install piston into bore. Hold ring compressor firmly against cylinder block until all piston rings have entered cylinder bore.

Special Tool
(A): 09916-77310

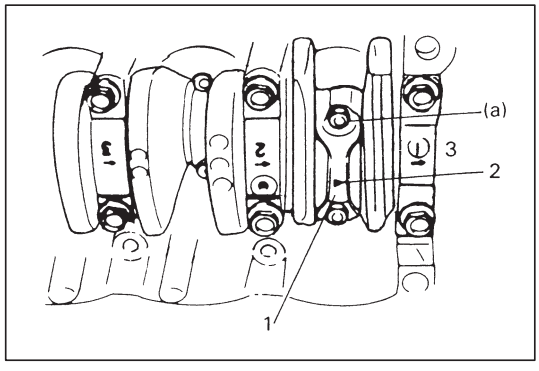

5) Install bearing cap (1):
Point arrow mark (2) on cap to crankshaft pulley side (3).
Tighten cap nuts to specification.

Tightening Torque
(a): 35 N·m (3.5 kg-m, 25.5 lb-ft)

6) Reverse removal procedure for installation, nothing the following points.
   - Adjust water pump drive belt tension, referring to “ENGINE COOLING” section.
   - Adjust A/C compressor belt tension, if equipped. Refer to Section 1B.
   - Adjust accelerator cable play. Refer to Section 6E.
   - Check to ensure that all removed parts are back in place. Reinstall any necessary parts which have not been reinstalled.
   - Refill engine with engine oil, referring to item “ENGINE OIL CHANGE” in Section 0B.
   - Refill cooling system referring to Section 6B.
   - Connect negative cable at battery.
   - Verify that ignition timing is within specification referring to “IGNITION SYSTEM” section.
   - Verify that there is no fuel leakage, coolant leakage, oil leakage and exhaust gas leakage at each connection.

UNIT REPAIR OVERHAUL

ENGINE MOUNTING

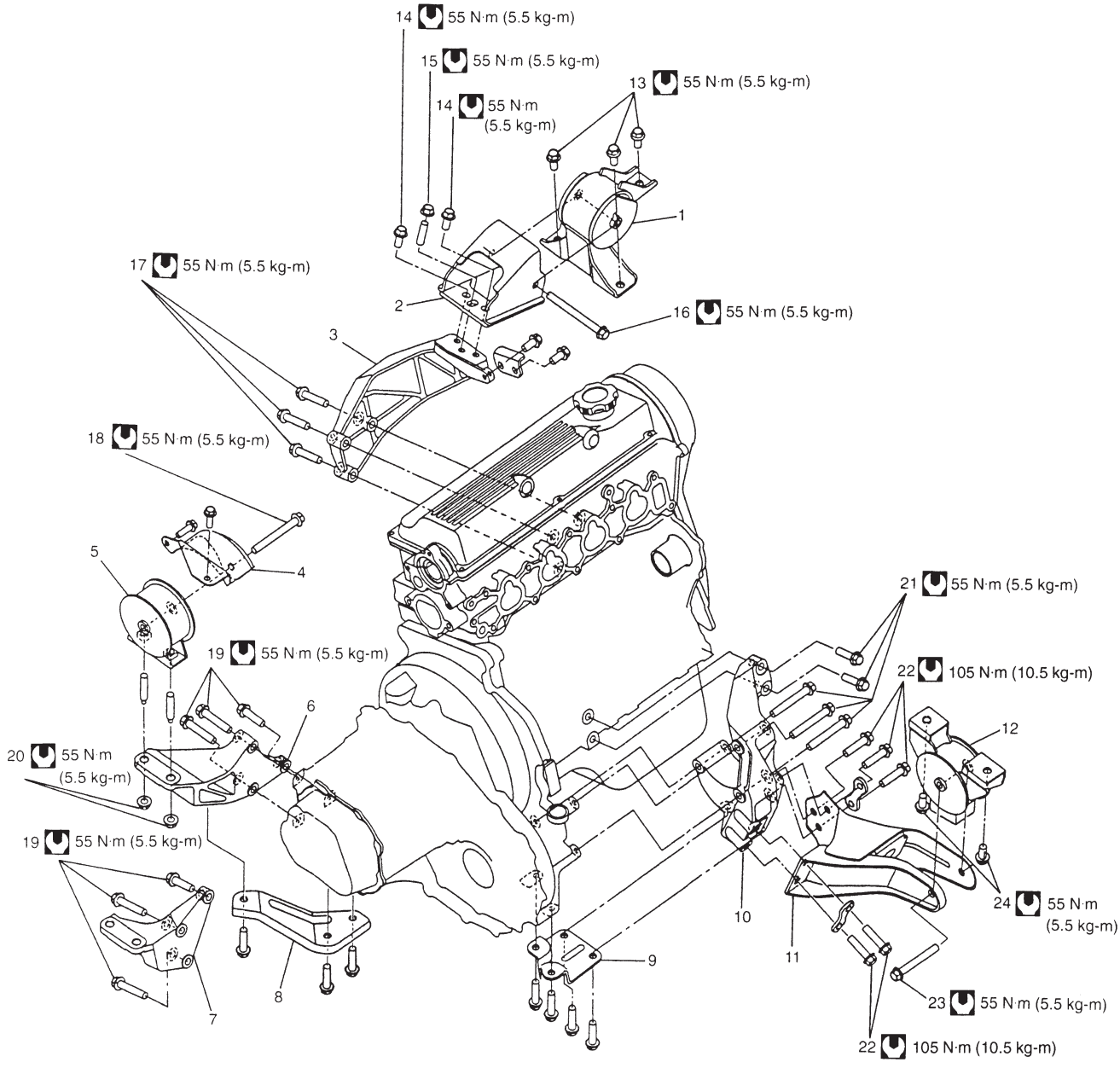

1. Right mounting
2. Right mounting swing bracket
3. Right mounting bracket
4. Left mounting body bracket
5. Left mounting
6. Left mounting bracket (M/T model)
7. Left mounting bracket (A/T model)
8. Left mounting bracket stiffener (M/T model)
9. Rear mounting bracket stiffener
10. Rear mounting No.2 bracket
11. Rear mounting No.1 bracket
12. Rear mounting
13. Right mounting body bolt
14. Right mounting bracket & swing bolt
15. Right mounting bracket & swing nut
16. Right mounting bush bolt
17. Right mounting bracket bolt
18. Left mounting bush bolt
19. Left mounting bracket & transmission bolt
20. Left mounting nut
21. Rear mounting bracket No.2 bolt
22. Rear mounting bracket No.1 to No.2 bolt
23. Rear mounting bush bolt
24. Rear mounting body bolt

: Tightening Torque

ENGINE ASSEMBLY

REMOVAL

1) Release fuel pressure in fuel feed line by referring to Section 6.
2) After disconnect negative and positive cables at battery, remove battery and battery tray.
3) Remove engine hood after disconnecting windshield washer hose.

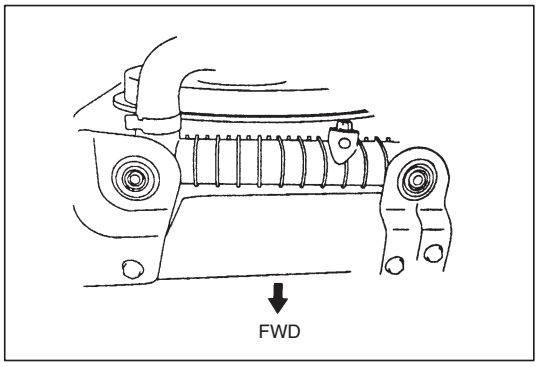

4) Drain cooling system.

> **WARNING:**
> **To help avoid danger of being burned, do not remove drain plug and radiator cap while engine and radiator are still hot. Scalding fluid and steam can be blown out under pressure if plug and cap are taken off too soon.**

5) Disconnect radiator inlet hose from thermostat case and outlet hose from water inlet pipe.

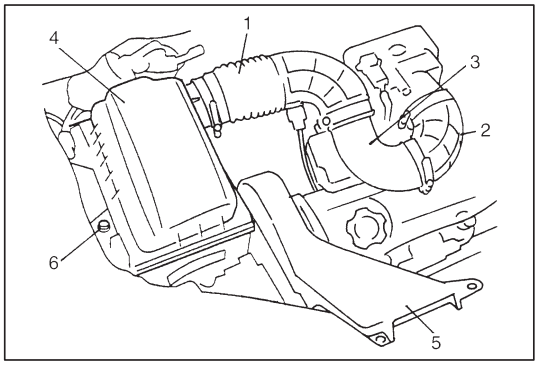

6) Remove air cleaner outlet No.1 hose (1) and No.2 hose (2) with air intake joint (3) as previously outlined.
7) Remove suction pipe (5) and remove air cleaner assembly (4) by removing its fastening bolt (6).

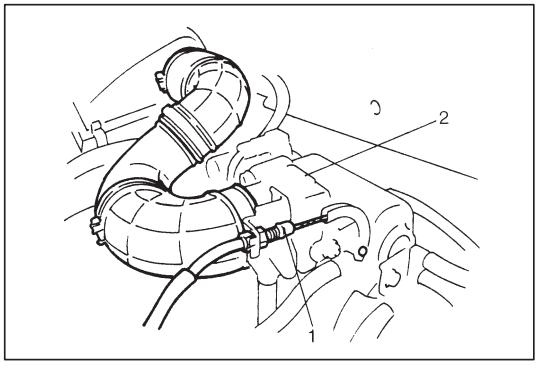

8) Disconnect following cables.
   - Accelerator cable (1) from throttle body (2).
   - Clutch cable from transmission (M/T).
   - Gear select cable from transmission (A/T).

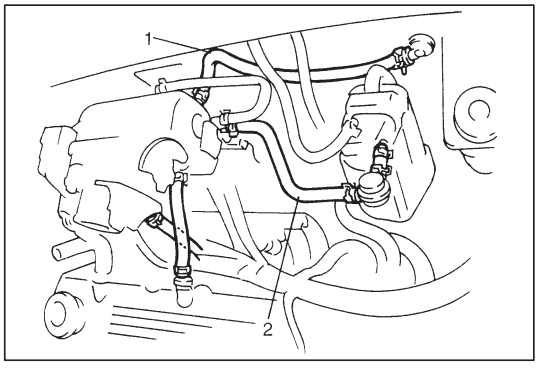

9) Disconnect following vacuum hose.
   - Brake booster hose (1) from intake manifold.
   - Canister purge hose (2) from EVAP canister purge valve.

10) Disconnect following electric wires:
    - Back-up light switch (M/T)
    - Shift switch (A/T)
    - Forward clutch revolution sensor (4 A/T)
    - A/T vehicle speed sensor (A/T)
    - Battery negative cable from transmission
    - Vehicle speed sensor
    - e.t.c.

    and release above wire harness from clamps.

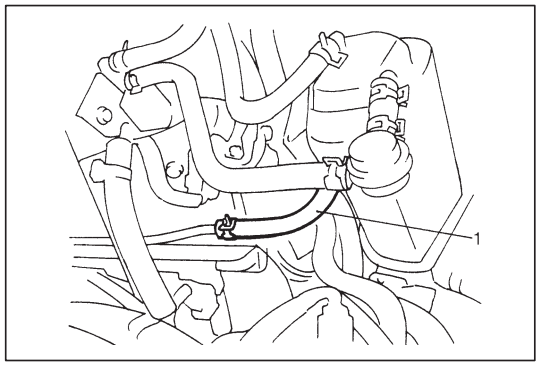

11) Disconnect fuel feed hose (1) from fuel delivery pipe.
12) Disconnect heater inlet and outlet hoses.

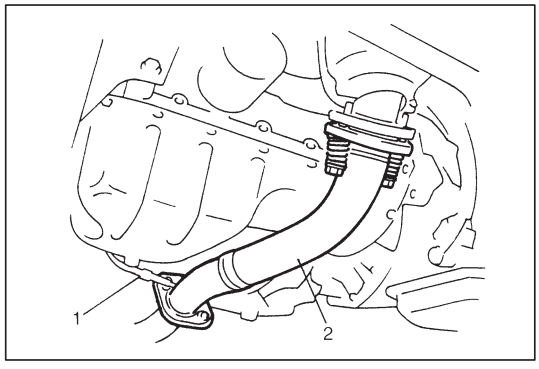

13) Remove right and left engine under covers.
14) Disconnect oxygen sensor No.2 coupler (1) and remove exhaust No.1 pipe (2).
15) Drain engine and transmission oil.

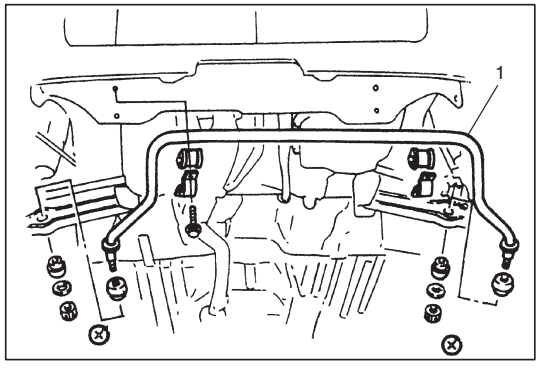

16) Remove stabilizer bar (1) referring to Section 3D.

17) Remove drive shaft joints from differential gear of transmission.
    Refer to Section 4 (DRIVE SHAFT) for procedure to disconnect drive shaft joint.
    For engine and transmission removal, it is not necessary to remove drive shafts from steering knuckle.

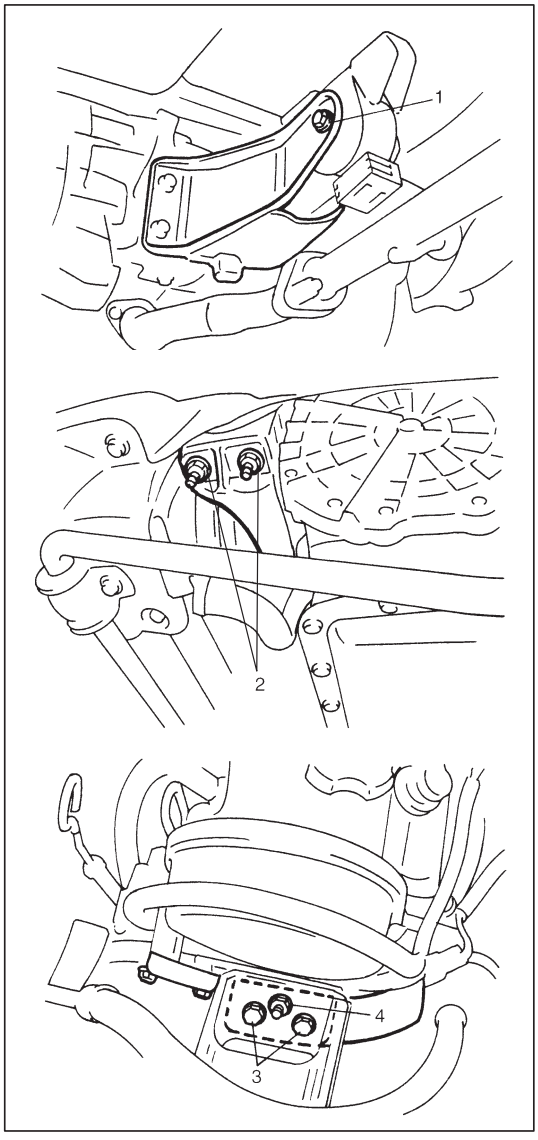

18) Disconnect A/C suction and discharge hoses and then remove A/C compressor and its bracket (if equipped), refer to Section 1B.
19) Install support device.
20) Remove engine rear mounting bush bolt (1).
21) Remove engine left mounting nuts (2).
22) Remove engine right mounting bracket bolts (3) and nut (4).

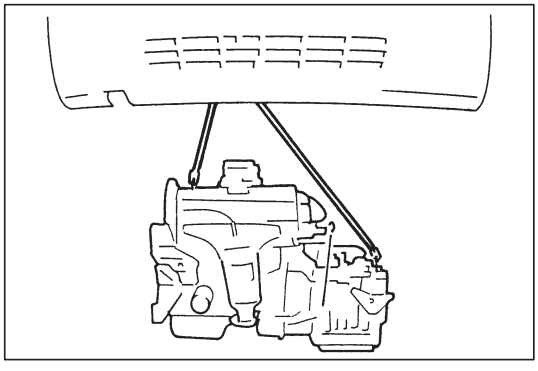

23) Before removing engine with transmission from body, recheck to make sure all hoses, electric wires and cables are disconnected from engine and transmission.
24) Lower engine with transmission from body.

INSTALLATION

1) Lift engine with transmission into engine compartment, but do not remove support device.
2) Install engine right mounting bracket bolts and nut.
3) Install engine left mounting nuts.
4) Install engine rear mounting bush bolt.
5) Tighten bolts and nuts to specified torque.

Tightening Torque
(a): 55 N·m (5.5 kg-m, 40.0 lb-ft)

6) Remove support device.
7) Reverse removal procedures for installation of remainder.
   - Install A/C compressor bracket and A/C compressor and connect A/C suction and discharge hoses, refer to Section 1B.
   - Push in each drive shaft joint fully so that snap ring engages with differential gear or center bearing support.
     Use care not to damage oil seal lip when inserting.
   - Install stabilizer bar, refer to Section 3D.
   - Install exhaust No.1 pipe.
   - Install right and left engine under covers.
   - Connect each hoses securely.
   - Clamp electric wire securely.
8) Adjust clutch pedal free travel, referring to Section 7C. (M/T)
   Connect gear select cable referring to Section 7B. (A/T)
9) Refill transmission with gear oil. (A/T fluid for A/T model), referring to Section 0B.
10) Refill engine with engine oil, referring to Section 0B.
11) Refill cooling system, referring to Section 6B.
12) Adjust A/C compressor belt, referring to Section 1B. (if equipped)
13) Upon completion of installation, verify that there is no fuel leakage, coolant leakage, transmission oil leakage or exhaust gas leakage at each connection.
14) Adjust accelerator cable play, referring to Section 6E.

MAIN BEARINGS, CRANKSHAFT AND CYLINDER BLOCK

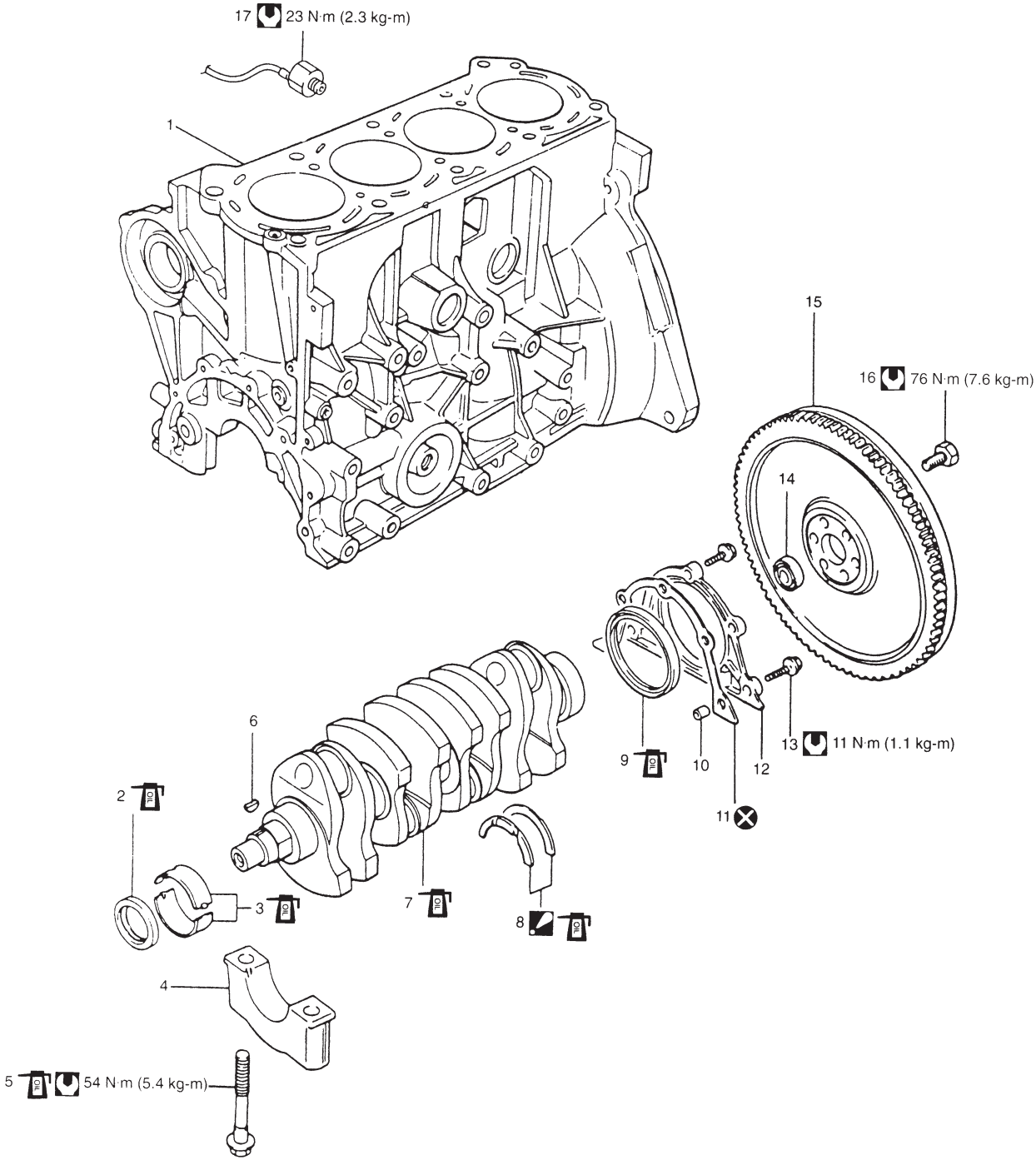

1. Cylinder block
2. Front oil seal:
   Apply engine oil to contact part of crankshaft with oil seal lip.
3. Main bearing:
   Apply engine oil to bearing inside surfaces.
4. Bearing cap
5. Cap bolt:
   Apply engine oil to bolt and bearing surfaces.
6. Timing pulley key
7. Crankshaft:
   Apply engine oil to crankshaft journals.
8. Thrust bearing:
   Set oil grooves of bearing to crank weds.
   Apply engine oil.
9. Rear oil seal:
   Apply engine oil to contact part of crankshaft with oil seal lip.
10. Pin
11. Oil seal housing gasket
12. Oil seal housing
13. Housing bolts
14. Input shaft bearing
15. Flywheel
16. Flywheel bolts
17. Knock sensor

: Tightening Torque
: Do not reuse

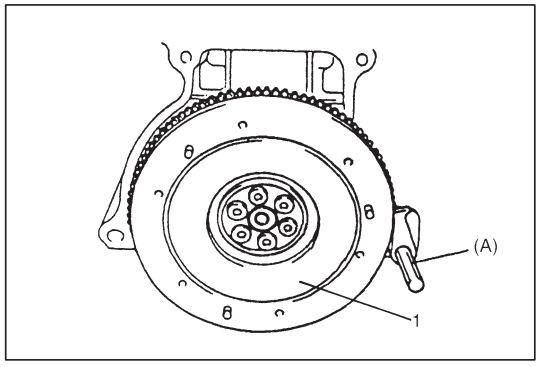

REMOVAL

1) Remove engine assembly from body as previously outlined.
2) Remove clutch cover, clutch disc and flywheel (1) (drive plate for A/T).

Special Tool
(A): 09924-17810

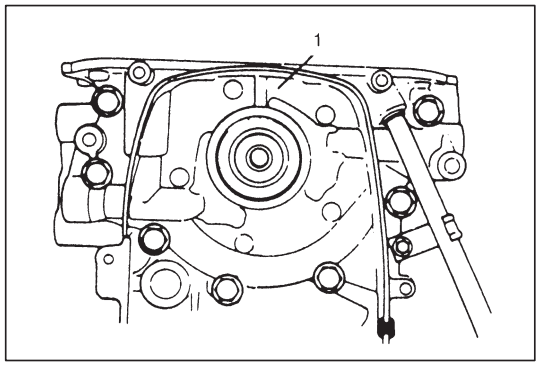

3) Remove crankshaft pulley, timing belt and crankshaft timing pulley.
4) Remove cylinder head assembly.
5) Remove oil pan and oil pump strainer.
6) Remove oil pump (1).

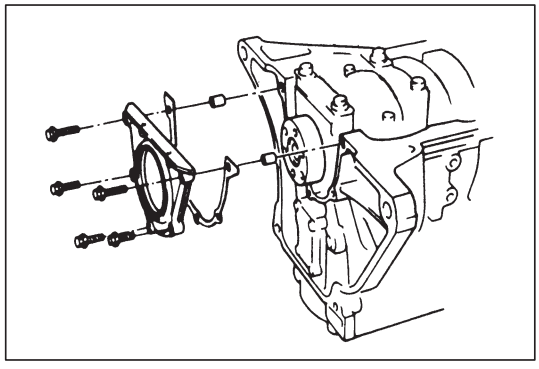

7) Remove oil seal housing.
8) Remove connecting rod bearing caps.

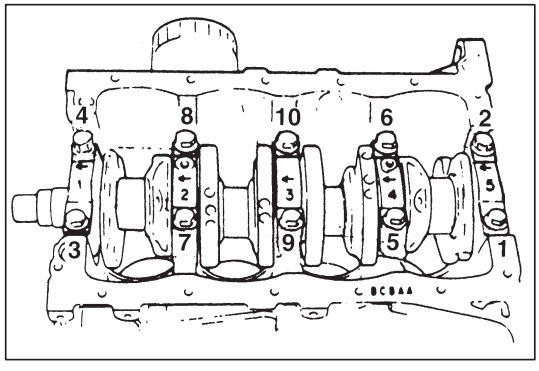

9) Loosen crankshaft bearing cap bolts in such order as indicated in figure a little at a time and remove bearing caps.
10) Remove crankshaft from cylinder block.

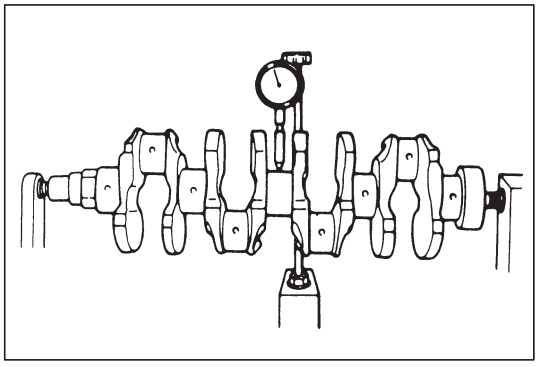

INSPECTION

Crankshaft

Crankshaft runout

Using a dial gauge, measure runout at center journal. Rotate crankshaft slowly. If runout exceeds its limit, replace crankshaft.

Limit on runout: 0.06 mm (0.0023 in.)

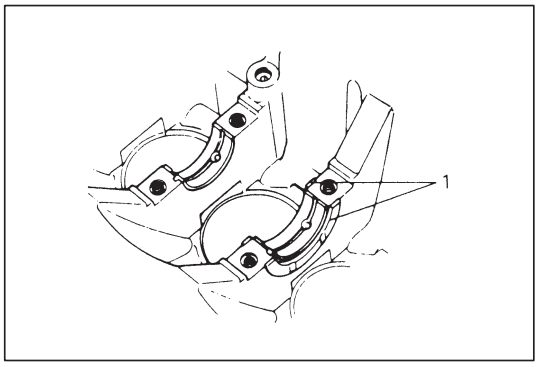

Crankshaft thrust play

Measure this play with crankshaft set in cylinder block in the normal manner, that is, with thrust bearing (1) and journal bearing caps installed.

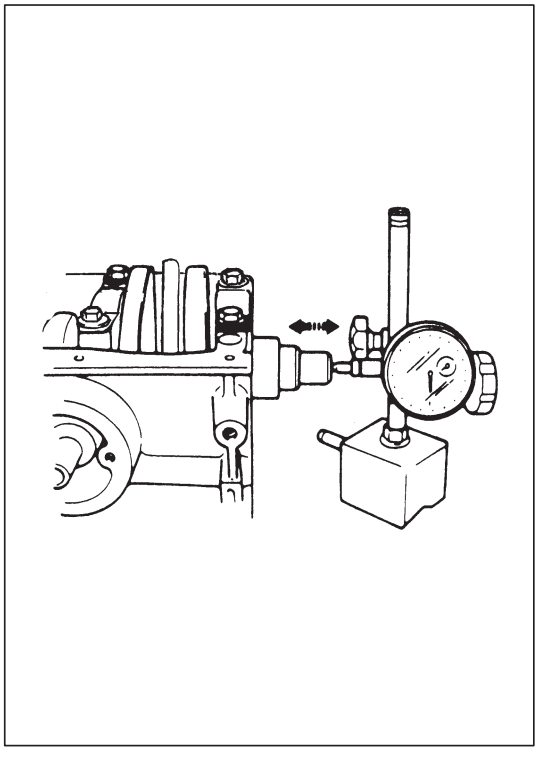

Use a dial gauge to read displacement in axial (thrust) direction of crankshaft.
If its limit is exceeded, replace thrust bearing with new standard one or oversize one to obtain standard thrust play.

Crankshaft Thrust Play
Standard: 0.11 – 0.31 mm (0.0044 – 0.0122 in.)
Limit : 0.38 mm (0.0149 in.)

Thickness of crankshaft thrust bearing
Standard: 2.500 mm (0.0984 in.)
Oversize 0.125 mm (0.0049 in.): 2.563 mm (0.1009 in.)

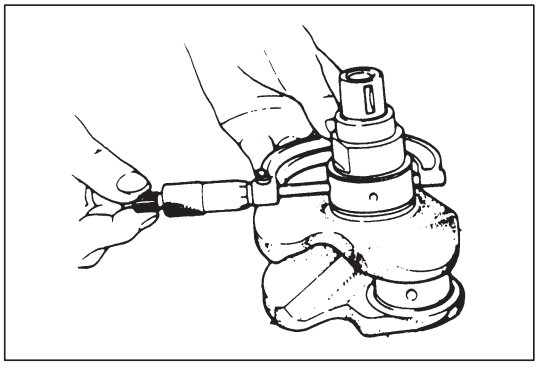

Out-of-round and taper (uneven wear) of journals

An unevenly worn crankshaft journal shows up as a difference in diameter at a cross section or along its length (or both).
This difference, if any, is determined by taking micrometer readings.
If any one of journals is badly damaged or if amount of uneven wear in the sense explained above exceeds its limit, regrind or replace crankshaft.

Limit on out-of-round and taper: 0.01 mm (0.0004 in.)

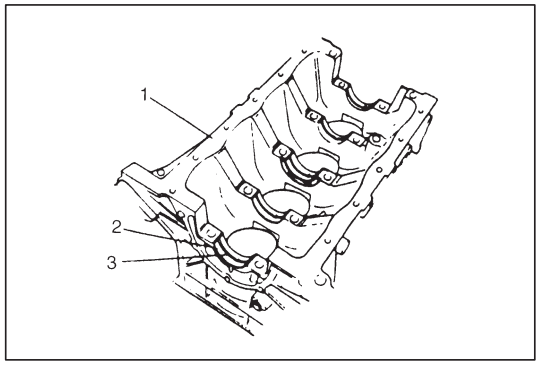

Main Bearings

General information

- Service main bearings are available in standardsize and 0.25 mm (0.0098 in.) undersize, and each of them has 5 kinds of bearings differing in tolerance.
- Upper half of bearing (2) has oil groove (3) as shown in figure. Install this half with oil groove to cylinder block (1).

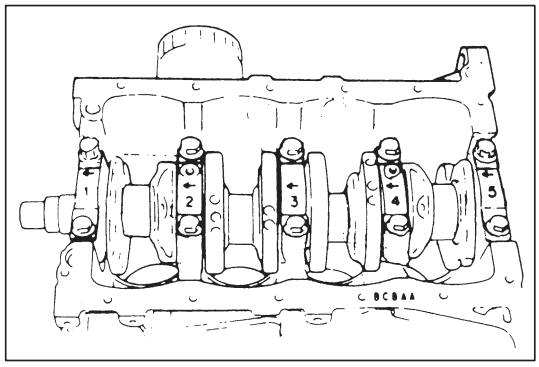

- On each main bearing cap, arrow mark and number are embossed as shown in figure.
  When installing each bearing cap to cylinder block, point arrow mark toward crankshaft pulley side and install each cap from that side to flywheel side in ascending order of numbers “1”, “2”, “3”, “4” and “5”. Tighten cap bolts to specified torque.

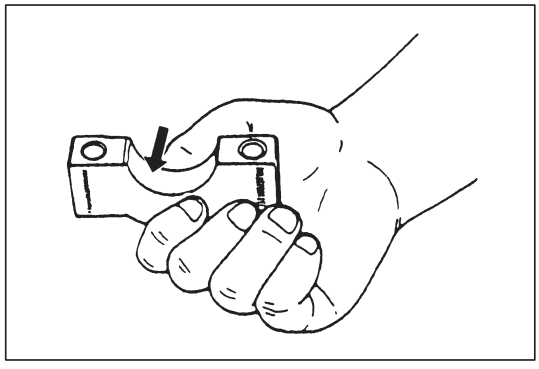

Inspection

Check bearings for pitting, scratches, wear or damage.
If any malcondition is found, replace both upper and lower halves. Never replace one half without replacing the other half.

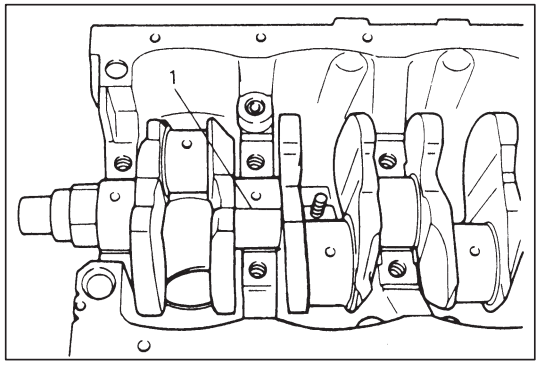

Main bearing clearance

Check clearance by using plasticgauge (1) according to following procedure.

1) Remove bearing caps.
2) Clean bearings and main journals.
3) Place a piece of plasticgauge to full width of bearing (parallel to crankshaft) on journal, avoiding oil hole.

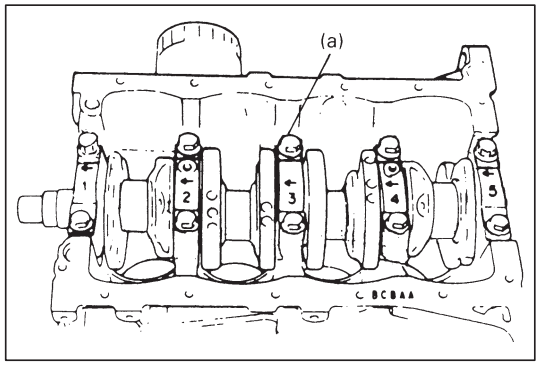

4) Install bearing cap as previously outlined and evenly torque cap bolts to specified torque.
   Bearing cap MUST be torqued to specification in order to assure proper reading of clearance.

   Tightening Torque
   (a): 54 N·m (5.4 kg-m, 39.0 lb-ft)

   NOTE:
   Do not rotate crankshaft while plasticgauge is installed.

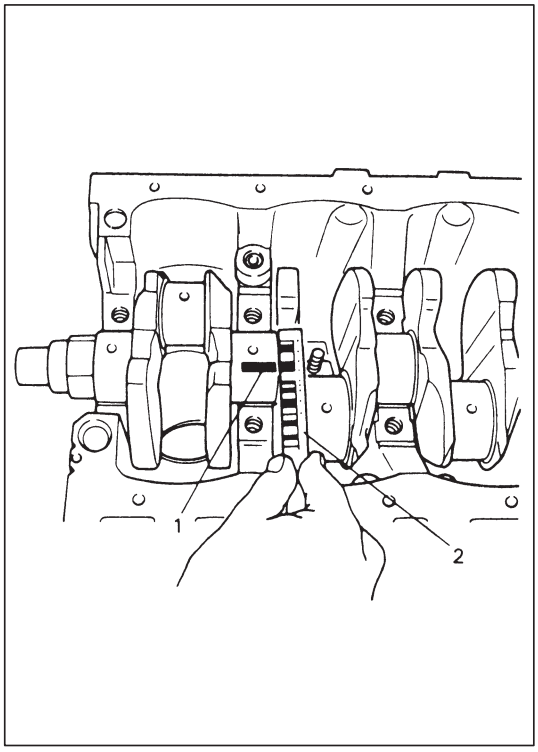

5) Remove cap and using scale (2) on plasticgauge (1) envelope, measure plasticgauge width at its widest point. If clearance exceeds its limit, replace bearing. Always replace both upper and lower inserts as a unit.
   A new standard bearing may produce proper clearance.
   If not, it will be necessary to regrind crankshaft journal for use of 0.25 mm undersize bearing.
   After selecting new bearing, recheck clearance.

	Standard	Limit
Bearing clearance	0.020 – 0.040 mm (0.0008 – 0.0016 in.)	0.060 mm (0.0023 in.)

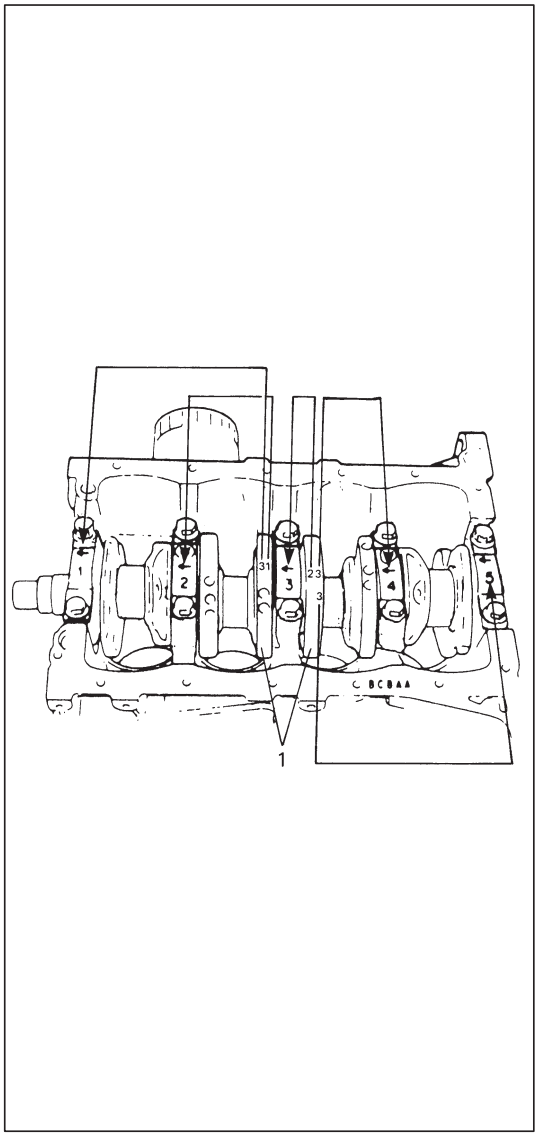

Selection of main bearings

STANDARD BEARING:

If bearing is in malcondition, or bearing clearance is out of specification, select a new standard bearing according to following procedure and install it.

1) First check journal diameter by using following procedure.
   As shown in figure, crank webs of No.2 and No.3 cylinders (1) have five stamped numerals.
   Three kinds of numerals (“1”, “2” and “3”) represent following journal diameters.

Numeral stamped	Journal diameter
1	44.994 – 45.000 mm (1.7714 – 1.7716 in.)
2	44.988 – 44.994 mm (1.7712 – 1.7714 in.)
3	44.982 – 44.988 mm (1.7709 – 1.7712 in.)

The first, second, third, fourth and fifth (left to right) stamped numerals represent journal diameters at bearing caps “1”, “2”, “3”, “4” and “5” respectively.

For example, in figure, the first (leftmost) numeral “3” indicates that journal dia. at bearing cap “1” is within 44.982 – 44.988 mm (1.7709 – 1.7712 in.), and second one “1” indicates that journal dia. at cap “2” is within 44.994 – 45.000 mm (1.7714 – 1.7716 in.).

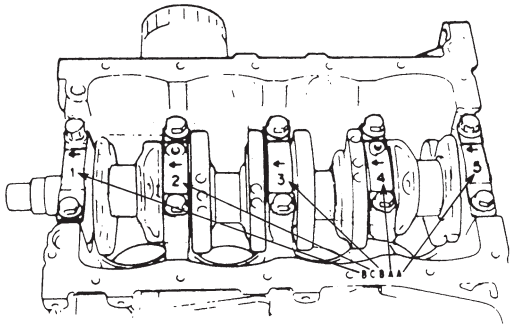

2) Next, check bearing cap bore diameter without bearing.
On mating surface of cylinder block, four alphabets are stamped as shown in figure.
Three kinds of alphabets (“A”, “B” and “C”) represent following cap bore diameters.

Alphabet stamped	Bearing cap bore diameter (without bearing)
A	49.000 – 49.006 mm (1.9291 – 1.9294 in.)
B	49.006 – 49.012 mm (1.9294 – 1.9296 in.)
C	49.012 – 49.018 mm (1.9296 – 1.9298 in.)

The first, second, third, fourth and fifth (left to right) stamped alphabets represent cap bore diameters of bearing caps “1”, “2”, “3”, “4” and “5”, respectively.
For example, in figure, the first (leftmost) alphabet “B” indicates that cap bore dia. of bearing cap “1” is within 49.006 – 49.012 mm, and the fifth (rightmost) alphabet “A” indicates that cap bore dia. of cap “5” is within 49.000 – 49.006 mm.

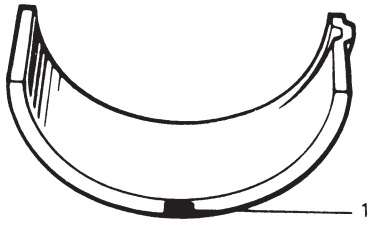

1. Paint

3) There are five kinds of standard bearings differing in thickness. To distinguish them, they are painted in following colors at the position as indicated in figure.
Each color indicates following thickness at the center of bearing.

Color painted	Bearing thickness
Green	1.996 – 2.000 mm (0.0786 – 0.0787 in.)
Black	1.999 – 2.003 mm (0.0787 – 0.0788 in.)
Colorless (no paint)	2.002 – 2.006 mm (0.0788 – 0.0789 in.)
Yellow	2.005 – 2.009 mm (0.0789 – 0.0790 in.)
Blue	2.008 – 2.012 mm (0.0790 – 0.0791 in.)

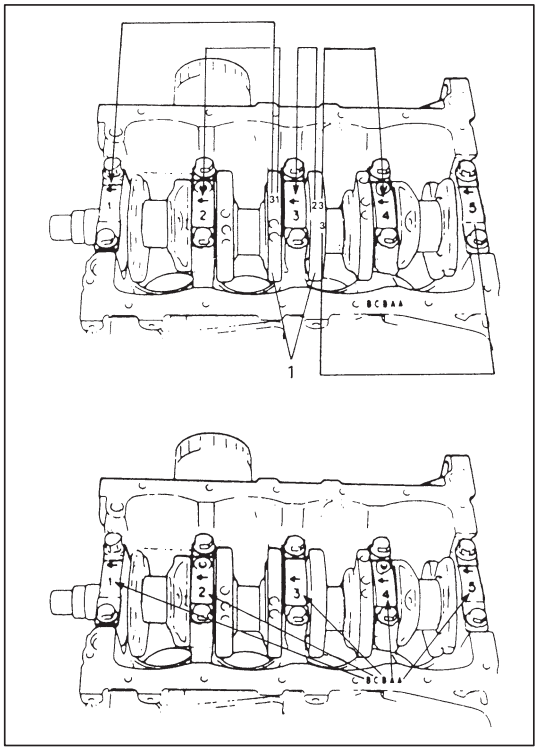

4) From numerals stamped on crank webs of No.2 and No.3 cylinders (1) and the alphabets stamped on mating surface of cylinder block, determine new standard bearing to be installed to journal, by referring to table given below.
For example, if numeral stamped on crank web is “1” and alphabet stamped on mating surface is “B”, install a new standard bearing painted in “Black” to its journal.

		Numeral stamped on crank web (Journal diameter)		
		1	2	3
Alphabet stamped on mating surface (Bearing cap bore dia.)	A	Green	Black	Colorless
	B	Black	Colorless	Yellow
	C	Colorless	Yellow	Blue
		New standard bearing to be installed.		

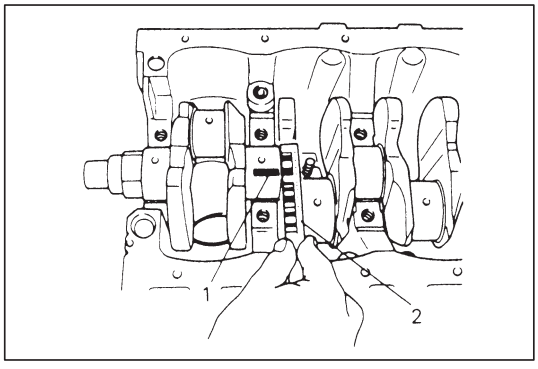

5) Using scale (2) on gaging plastic (1), check bearing clearance with newly selected standard bearing.
If clearance still exceeds its limit, use next thicker bearing and recheck clearance.
6) When replacing crankshaft or cylinder block due to any reason, select new standard bearings to be installed by referring to numerals stamped on new crankshaft or alphabets stamped on mating surface of new cylinder block.

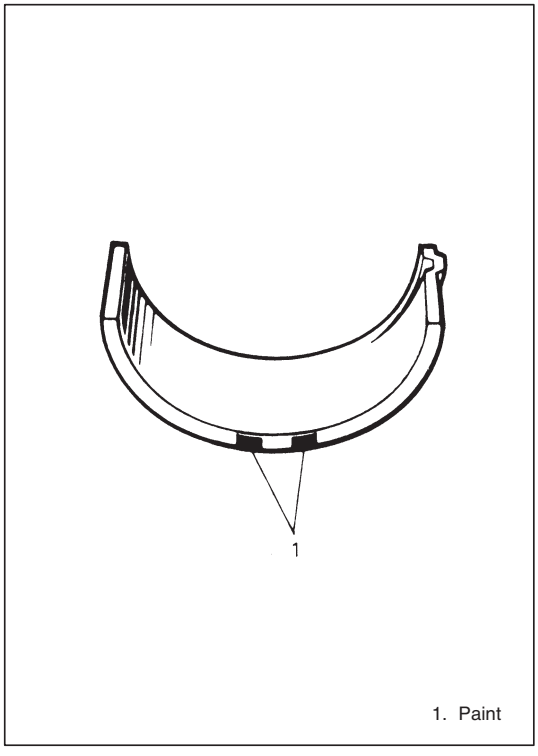

UNDERSIZE BEARING (0.25 mm):

- 0.25 mm undersize bearing is available, in five kinds varying in thickness.
To distinguish them, each bearing is painted in following colors at such position as indicated in figure.
Each color represents following thicknesses at the center of bearing.

Color painted	Bearing thickness
Green & Red	2.121 – 2.125 mm (0.0835 – 0.0836 in.)
Black & Red	2.124 – 2.128 mm (0.0836 – 0.0837 in.)
Red only	2.127 – 2.131 mm (0.0837 – 0.0838 in.)
Yellow & Red	2.130 – 2.134 mm (0.0838 – 0.0839 in.)
Blue & Red	2.133 – 2.137 mm (0.0839 – 0.0840 in.)

- If necessary, regrind crankshaft journal and select undersize bearing to use with it as follows.
  1) Regrind journal to following finished diameter.

Finished diameter: 44.732 – 44.750 mm (1.7611 – 1.7618 in.)

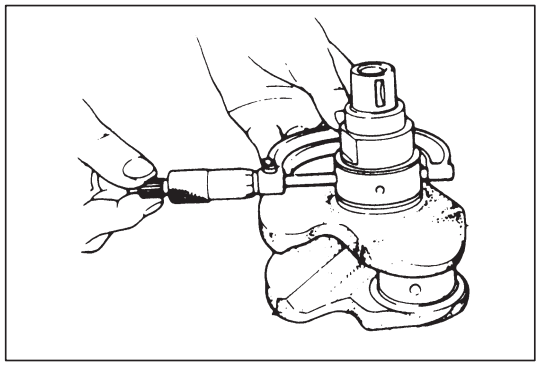

2) Using micrometer, measure reground journal diameter. Measurement should be taken in two directions perpendicular to each other in order to check for out-of-round.
3) Using journal diameter measured above and alphabets stamped on mating surface of cylinder block, select an undersize bearing by referring to table given below.
   Check bearing clearance with newly selected undersize bearing.

		Measured journal diameter		
		44.744 – 44.750 mm (1.7616 – 1.7618 in.)	44.738 – 44.744 mm (1.7613 – 1.7616 in.)	44.732 – 44.738 mm (1.7611 – 1.7613 in.)
Alphabets stamped on mating surface of cylinder block	A	Green & Red	Black & Red	Red only
	B	Black & Red	Red only	Yellow & Red
	C	Red only	Yellow & Red	Blue & Red
		Undersize bearing to be installed		

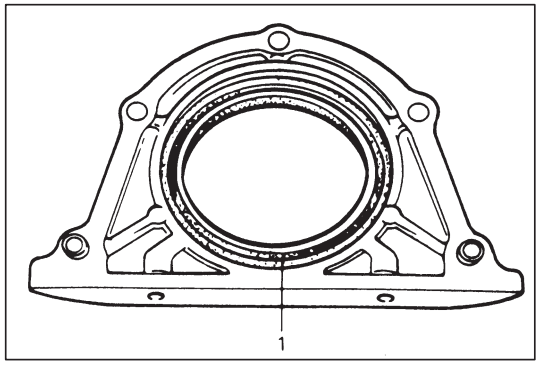

Rear Oil Seal

Carefully inspect rear oil seal (1) for wear or damage. If its lip is worn or damaged, replace it.

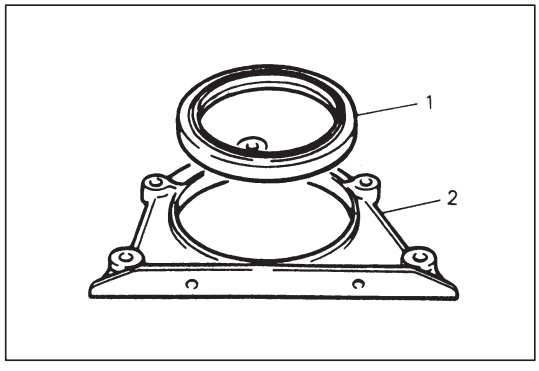

For oil seal (1) installation, press-fit rear oil seal so that oil seal housing (2) end face is flush with oil seal end face.

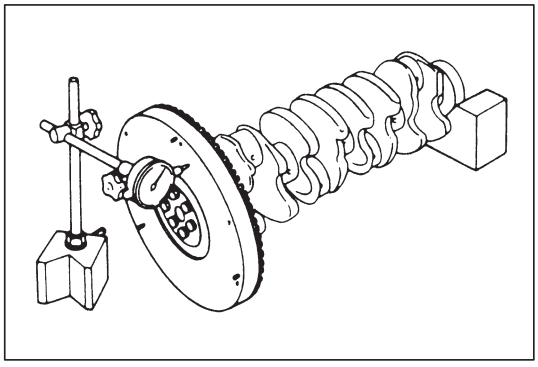

Flywheel

- If ring gear is damaged, cracked or worn, replace flywheel.
- If the surface contacting clutch disc is damaged, or excessively worn, replace flywheel.
- Check flywheel for face runout with dial gauge.
  If runout exceeds its limit, replace flywheel.

Limit on runout: 0.2 mm (0.0078 in.)

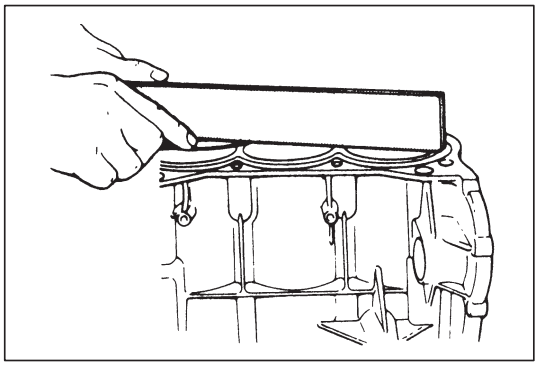

Cylinder Block

Distortion of gasketed surface

Using straightedge and thickness gauge, check gasketed surface for distortion and, if flatness exceeds its limit, correct it.

Item	Standard	Limit
Flatness	0.03 mm (0.0012 in.)	0.06 mm (0.0024 in.)

Honing or reboring cylinders

1) When any cylinder needs reboring,all other cylinders must also be rebored at the same time.
2) Select oversized piston according to amount of cylinder wear.

Size	Piston diameter
O/S 0.25	74.220 – 74.230 mm (2.9220 – 2.9224 in.)
O/S 0.50	74.470 – 74.480 mm (2.9319 – 2.9323 in.)

3) Using micrometer, measure piston diameter.

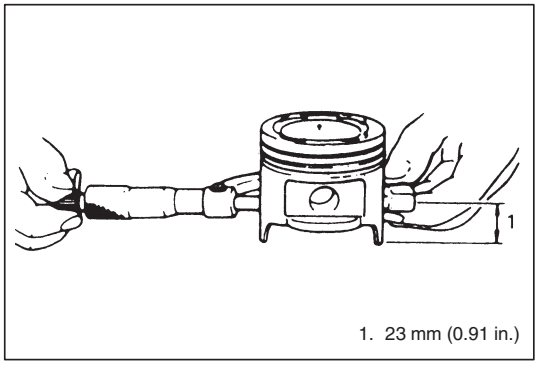

1. 23 mm (0.91 in.)

4) Calculate cylinder bore diameter to be rebored.
   D = A + B – C
   D: Cylinder bore diameter to be rebored.
   A: Piston diameter as measured.
   B: Piston clearance = 0.02 – 0.04 mm
   (0.0008 – 0.0015 in.)
   C: Allowance for honing = 0.02 mm (0.0008 in.)
5) Rebore and hone cylinder to calculated dimension.

   NOTE:
   Before reboring, install all main bearing caps in place and tighten to specification to avoid distortion of bearing bores.

6) Measure piston clearance after honing.

INSTALLATION

NOTE:

- **All parts to be installed must be perfectly clean.**
- **Be sure to oil crankshaft journals, journal bearings, thrust bearings, crankpins, connecting rod bearings, pistons, piston rings and cylinder bores.**
- **Journal bearings, bearing caps, connecting rods, rod bearings, rod bearing caps, pistons and piston rings are in combination sets. Do not disturb such combination and make sure that each part goes back to where it came from, when installing.**

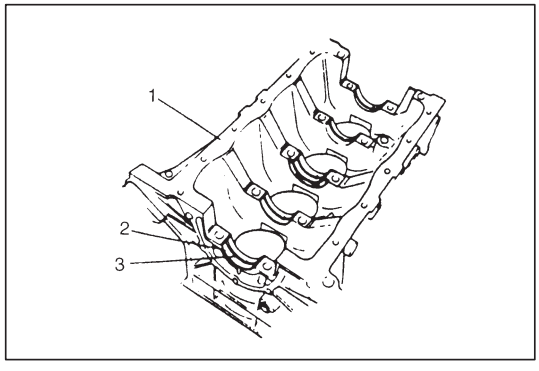

1) Install main bearings to cylinder block (1).
   Upper half of bearing (2) has an oil groove (3). Install it to cylinder block, and the other half without oil groove to bearing cap.
   Make sure that two halves are painted in the same color.

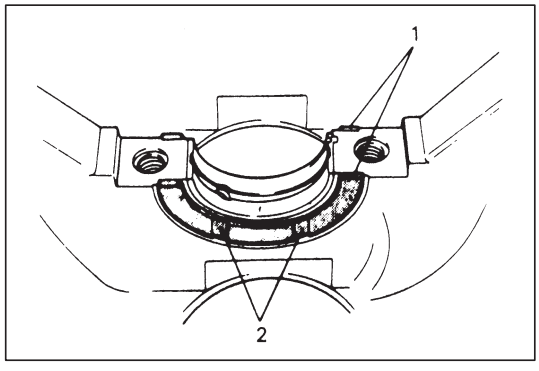

2) Install thrust bearings (1) to cylinder block between No.2 and No.3 cylinders. Face oil groove (2) sides to crank webs.

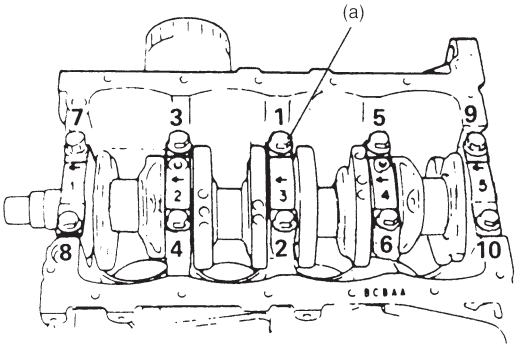

3) Install crankshaft to cylinder block.
4) Install bearing cap to cylinder block, making sure to point arrow mark (on each cap) to crankshaft pulley side. Fit them sequentially in ascending order, 1, 2, 3, 4 and 5, starting from pulley side. Tighten bearing cap bolts in such order as shown in figure a little at a time and repeat it till they are tightened to specified torque.

Tightening Torque
(a): 54 N·m (5.4 kg-m, 39.0 lb-ft)

NOTE:
After tightening cap bolts, check to be sure that crankshaft rotates smoothly when turning it by 8.0 N·m (0.8 kg, 5.8 lb-ft) torque or below.

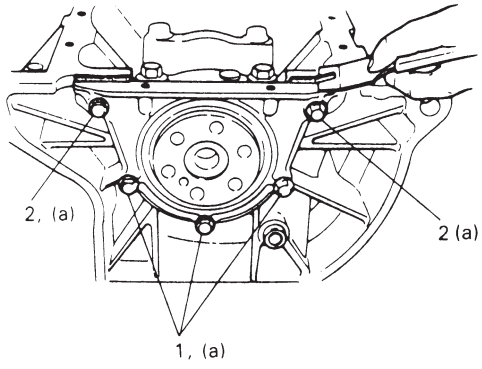

1. Short bolts
2. Long bolts

5) Install new gasket and oil seal housing.
Do not reuse gasket removed in disassembly. Apply engine oil to oil seal lip before installation. Tighten housing bolts to specification.

Tightening Torque
(a): 11 N·m (1.1 kg-m, 8.0 lb-ft)

NOTE:
As there are 2 types of housing bolts, refer to figure for their correct use.

After installing oil seal housing, gasket edges might bulge out; it so, cut them off to make them flush with cylinder block and oil seal housing.
6) Install oil pump.
Refer to INSTALLATION of OIL PUMP in this section.

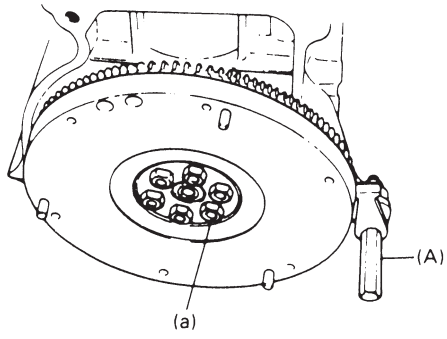

7) Install flywheel (M/T model) or drive plate (A/T model).
Using special tool, lock flywheel or drive plate, and torque its bolts to specification.

Special Tool
(A): 09924-17810

Tightening Torque
(a): 76 N·m (7.6 kg-m, 55.0 lb-ft)

8) Install pistons and connecting rods as previously outlined.
9) Install oil pump strainer and oil pan as previously outlined.

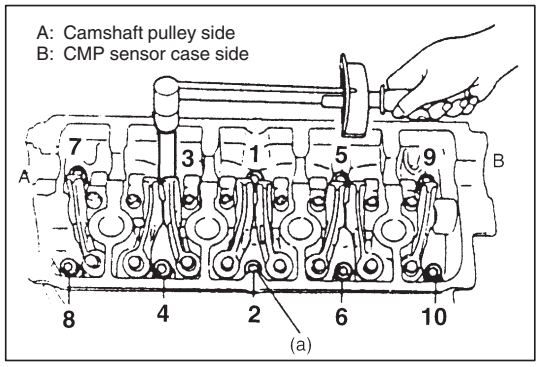

10) Install cylinder head assembly to cylinder block as previously outlined.

11) Install camshaft, crankshaft timing belt pulley, timing belt, crankshaft pulley, water pump pulley, etc., as previously outlined.
12) Install clutch to flywheel (for M/T vehicle). For clutch installation, refer to “CLUTCH” section.
13) Install engine assembly to vehicle as previously outlined.

Tightening Torque
(a): 55 N·m (5.5 kg-m, 40.0 lb-ft)

SPECIAL TOOLS

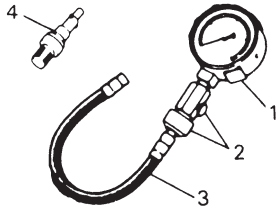 1. 09915-64510-001 Compression gauge 2. 09915-64510-002 Connector 3. 09915-64530 Hose 4. 09915-67010 Attachment	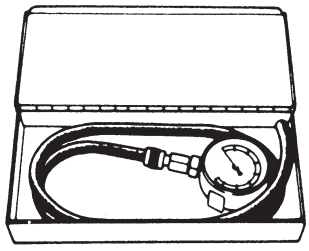 09915-67310 Vacuum gauge	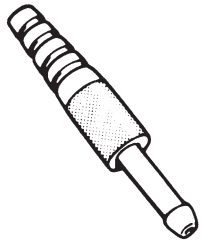 09918-08210 Vacuum gauge hose joint	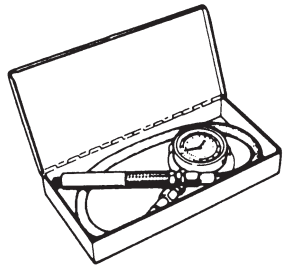 09915-77310 Oil pressure gauge
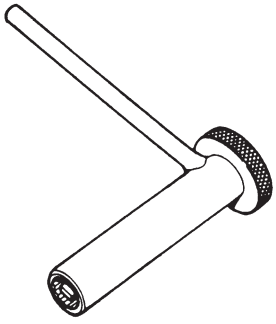 09917-18210 Tappet adjuster wrench	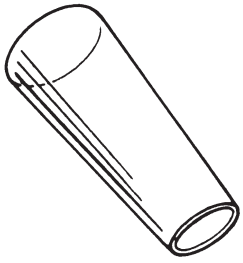 09926-18210 Oil seal guide (Vinyl resin)	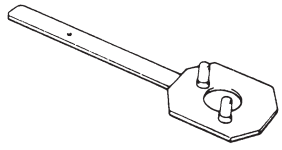 09917-68220 Camshaft pulley holder	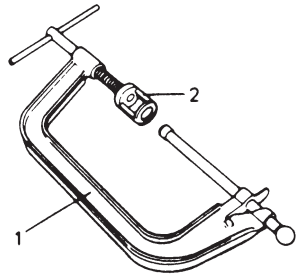 1. 09916-14510 Valve lifter 2. 09916-14910 Valve lifter attachment
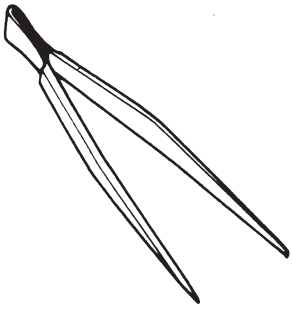 09916-84511 Forceps	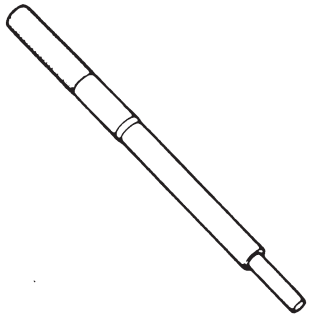 09916-44910 Valve guide remover	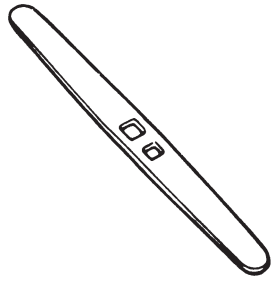 09916-34541 Reamer handle	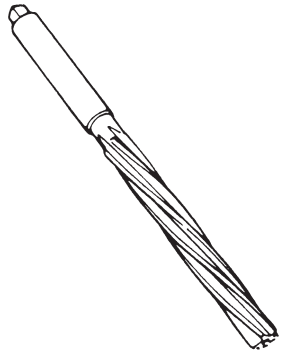 09916-38210 Reamer (11 mm)
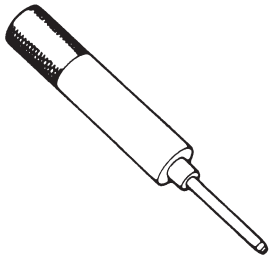 09916-58210 Valve guide installer handle	 09916-56011 Valve guide installer attachment	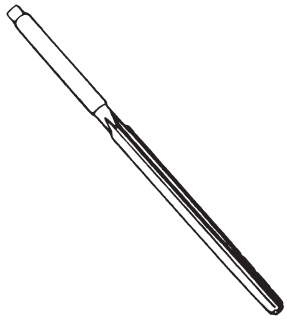 09916-34550 Reamer (5.5 mm)	 09917-98221 Valve stem seal installer

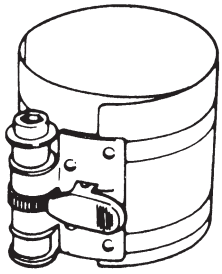	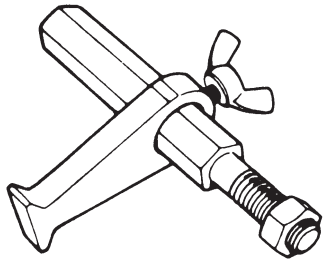	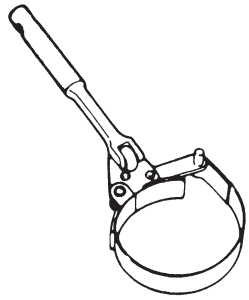
09916-77310 Piston ring compressor	09924-17810 Flywheel holder	09915-47330 Oil filter wrench

REQUIRED SERVICE MATERIALS

MATERIALS	RECOMMENDED SUZUKI PRODUCT	USE
Sealant	SUZUKI BOND NO.1207C (99000-31150)	● Mating surfaces of cylinder block and oil pan.
Sealant	SUZUKI BOND NO.1215 (99000-31110)	● Mating surfaces of camshaft housing (No.6). ● Mating surfaces of CMP sensor case and cylinder head.

SECTION 6B

ENGINE COOLING

WARNING:
For vehicles equipped with Supplemental Restraint (Air Bag) System:

- **Service on and around the air bag system components or wiring must be performed only by an authorized SUZUKI dealer. Refer to "Air Bag System Components and Wiring Location View" under "General Description" in air bag system section in order to confirm whether you are performing service on or near the air bag system components or wiring. Please observe all WARNINGS and "Service Precautions" under "On-Vehicle Service" in air bag system section before performing service on or around the air bag system components or wiring. Failure to follow WARNINGS could result in unintentional activation of the system or could render the system inoperative. Either of these two conditions may result in severe injury.**
- **Technical service work must be started at least 90 seconds after the ignition switch is turned to the "LOCK" position and the negative cable is disconnected from the battery. Otherwise, the system may be activated by reserve energy in the Sensing and Diagnostic Module (SDM).**

CONTENTS

GENERAL DESCRIPTION

The cooling system consists of the radiator cap, radiator, coolant reservoir, hoses, water pump, cooling fan and thermostat. The radiator is of tube-and-fin type.

COOLING SYSTEM CIRCULATION

1) While the engine is warmed up (thermostat closed), coolant circulates as follows.

Water pump → Cylinder block → Cylinder head → Throttle body / Heater unit (→A/T oil cooler) → Water inlet pipe → Water pump

2) When coolant is warmed up to normal temperature and the thermostat opens, coolant passes through the radiator core to be cooled as well as the above flow circuit.

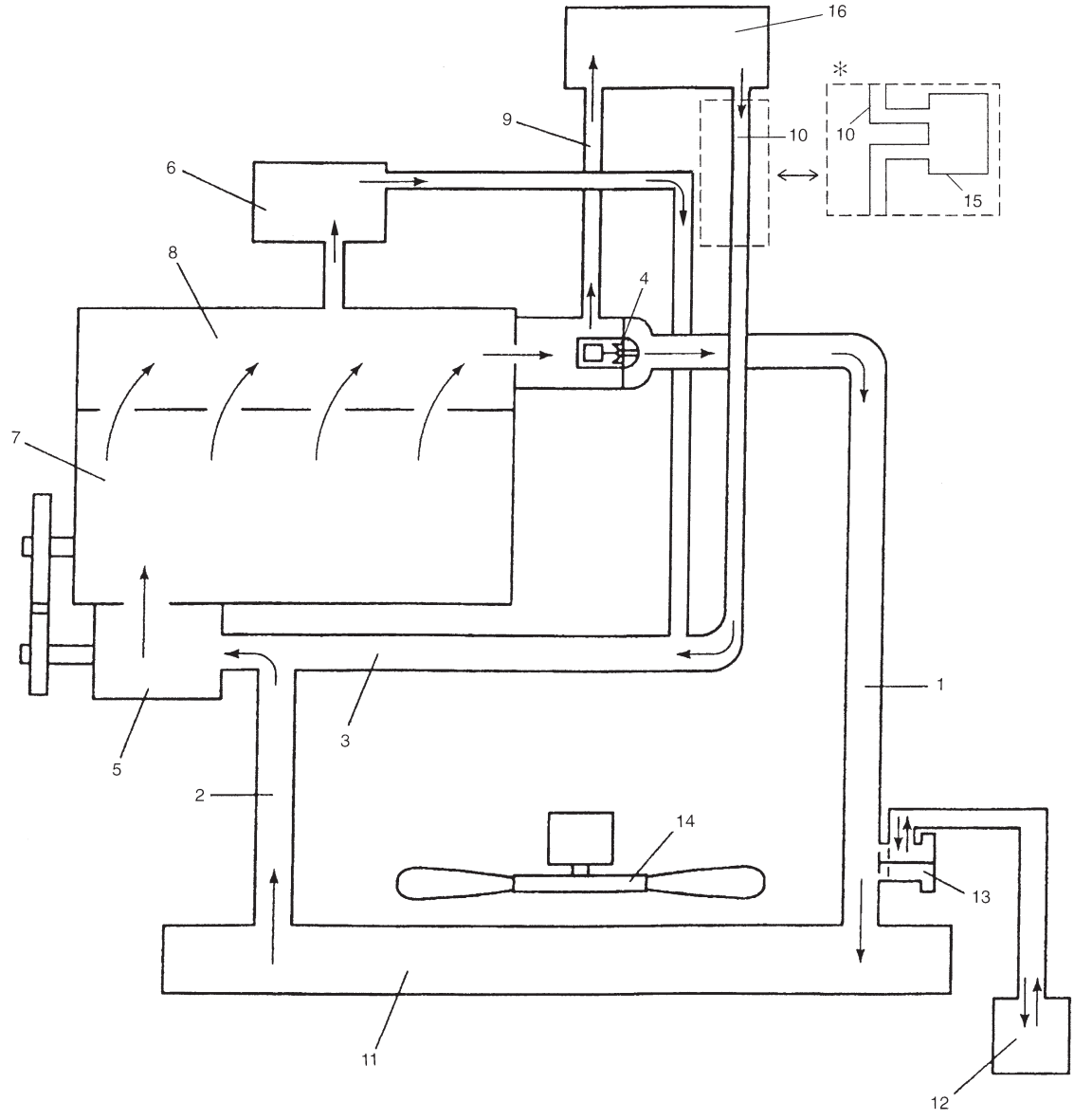

1. Radiator inlet hose
2. Radiator outlet hose
3. Water inlet pipe
4. Thermostat
5. Water pump
6. Throttle body
7. Cylinder block
8. Cylinder head
9. Heater inlet hose
10. Heater outlet hose
11. Radiator
12. Reservoir tank
13. Radiator cap
14. Cooling fan
15. A/T oil cooler
16. Heater unit

✻: A/T vehicle

COOLANT

The coolant recovery system is standard. The coolant in the radiator expands with heat, and the overflow is collected in the reservoir.
When the system cools down, the coolant is drawn back into the radiator.

The cooling system has been filled at the factory with a quality coolant that is a 50/50 mixture of water and ethylene glycol antifreeze (70/30; in a market where no freezing temperature is anticipated).

This 50/50 mixture coolant solution provides freezing protection to – 36°C (– 33°F).

- Maintain cooling system freeze protection at – 36°C (– 33°F) to ensure protection against corrosion and loss of coolant from boiling. This should be done even if freezing temperatures are not expected.
- Add ethylene glycol base coolant when coolant has to be added because of coolant loss or to provide added protection against freezing at temperature lower than – 36°C (– 33°F).

NOTE:
- **Alcohol or methanol base coolant or plain water alone should not be used in cooling system at any time as damage to cooling system could occur.**
- **Even in a market where no freezing temperature is anticipated, mixture of 70% water and 30% ethylene glycol antifreeze (Antifreeze/ Anti-corrosion coolant) should be used for the purpose of corrosion protection and lubrication.**

ANTI-FREEZE PROPORTIONING CHART

			Vehicle with M/T		Vehicle with A/T	
ANTI-FREEZE PROPORTIONING CHART	Freezing temperature	°C	–16	–36	–16	–36
		°F	3	–33	3	–33
	Anti-freeze/Anti-corrosion coolant concentration	%	30	50	30	50
	Ratio of compound to cooling water	ltr.	1.32/3.08	2.20/2.20	1.35/3.15	2.25/2.25
		US pt.	2.79/6.51	4.65/4.65	2.85/6.66	4.76/4.76
		Imp. pt.	2.32/5.42	3.87/3.87	2.38/5.54	3.96/3.96
COOLANT CAPACITY	Engine radiator and heater		3.7 liters (7.82/6.51 US/Imp. pt.)		3.8 liters (8.03/6.69 US/Imp. pt.)	
	Reservoir		0.7 liters (1.48/1.23 US/Imp. pt.)			
	Total		4.4 liters (9.30/7.74 US/Imp. pt.)		4.5 liters (9.51/7.92 US/Imp. pt.)	

DIAGNOSIS

Condition	Possible Cause	Correction
Engine overheats	● Loose or broken water pump belt	Adjust or replace.
	● Not enough coolant	Check coolant level and add as necessary.
	● Faulty thermostat	Replace.
	● Faulty water pump	Replace.
	● Dirty or bent radiator fins	Clean or remedy.
	● Coolant leakage on cooling system	Repair.
	● Defective cooling fan motor	Check and replace as necessary.
	● Faulty fan motor control circuit	Check control circuit.
	● Plugged radiator	Check and replace radiator as necessary.
	● Faulty radiator cap	Replace.
	● Dragging brakes	Adjust brake.
	● Slipping clutch	Adjust or replace.

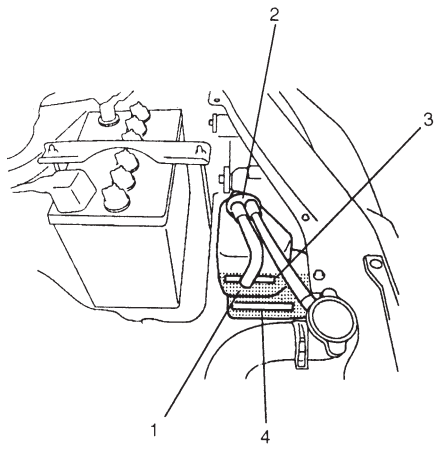

MAINTENANCE

COOLANT LEVEL CHECK

Coolant Level

To check level, lift hood and look at “see-through” coolant reservoir (1).
It is not necessary to remove radiator cap to check coolant level.

WARNING:
To help avoid danger of being burned:
- **Do not remove reservoir cap while coolant is “boiling”.**
- **Do not remove radiator cap while engine and radiator are still hot.**

Scalding fluid and steam can be blown out under pressure if either cap is taken off too soon.

When engine is cool, check coolant level in reservoir.
A normal coolant level should be between “FULL” (3) and “LOW” (4) level marks on reservoir.
If coolant level is below “LOW” level mark, remove reservoir cap (2) and add proper coolant to reservoir to bring coolant level up to “FULL” level mark. Then, reinstall cap and align match marks on tank and cap.

NOTE:
- **If proper quality antifreeze is used, there is no need to add extra inhibitors or additives that claim to improve system. They may be harmful to proper operation of system, and are unnecessary expense.**
- **When installing reservoir cap, align arrow marks on reservoir and cap.**

COOLING SYSTEM SERVICE

WARNING:
To help avoid danger of being burned, do not remove radiator cap while engine and radiator are still hot.
Scalding fluid and steam can be blown out under pressure if cap is taken off too soon.

Cooling system should be serviced as follows.
1) Check cooling system for leakage or damage.
2) Wash radiator cap and filler neck with clean water by removing radiator cap when engine is cold.
3) Check coolant for proper level and freeze protection.

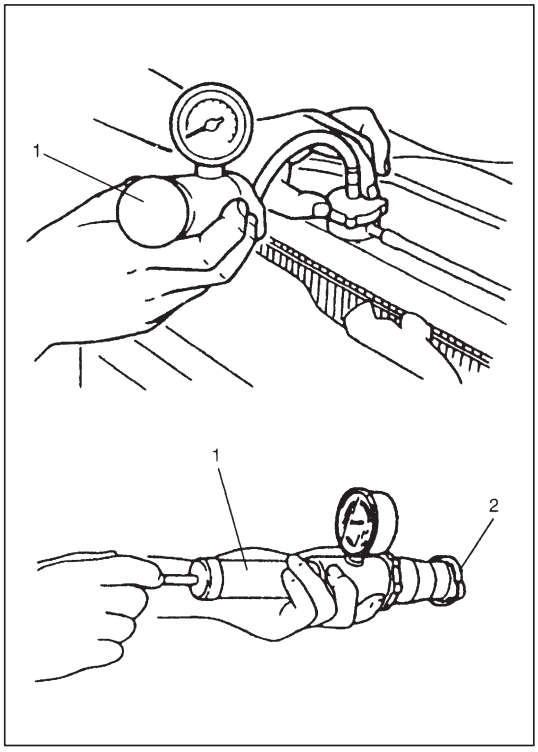

4) Using a pressure tester (1), check system and radiator cap (2) for proper pressure holding capacity 110 kPa (1.1 kg/cm^2, 15.6 psi). If replacement of cap is required, use specified cap for this vehicle.

NOTE:
After installing radiator cap to radiator, make sure that the ear of cap lines is parallel to radiator.

5) Tighten hose clamps and inspect all hoses. Replace hoses whenever cracked, swollen or otherwise deteriorated.
6) Clean frontal area of radiator core.

COOLING SYSTEM FLUSH AND REFILL

1) Remove radiator cap when engine is cool:
   Turn cap counterclockwise slowly until it reaches a “stop”.
   (Do not press down while turning it.)
   Wait until pressure is relieved (indicated by a hissing sound) then press down on cap and continue to turn it counterclockwise.

   WARNING:
   To help avoid danger of being burned, do not remove radiator cap while engine and radiator are still hot. Scalding fluid and steam can be blown out under pressure if cap is taken off too soon.

2) With radiator cap removed, run engine until upper radiator hose is hot (this shows that thermostat is open and coolant is flowing through system).

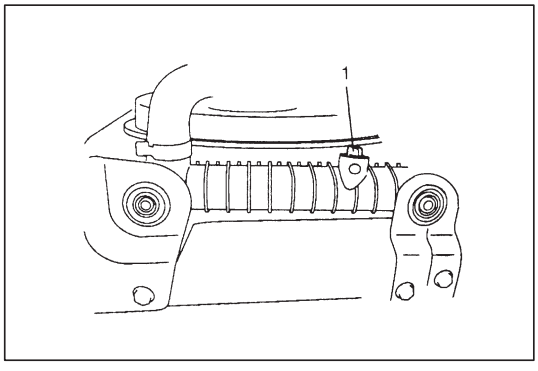

3) Stop engine and drain coolant.
4) Close drain plug (1). Add water until system is filled and run engine until upper radiator hose is hot again.
5) Repeat steps 3) and 4) several times until drained liquid is nearly colorless.
6) Drain system and then close radiator drain plug tightly.

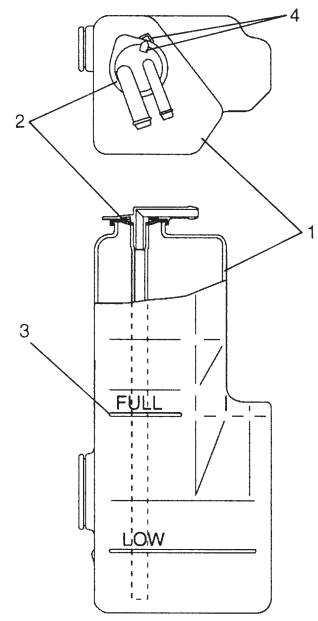

7) Remove reservoir (1) and remove cap (2) from reservoir and pour out any fluid, scrub and clean inside of tank with soap and water.
   Flush it well with clean water and drain. Reinstall reservoir.
8) Disconnect coolant hose from throttle body for improving air purging efficiency and add 50/50 mixture of good quality ethylene glycol antifreeze and water to radiator until coolant overflow disconnected hose. And connect coolant hose to throttle body.
   Fill radiator to the base of radiator filler neck and reservoir to "FULL" level mark (3). Reinstall reservoir cap and align match marks (4) on reservoir and cap.
9) Run engine, with radiator cap removed, until radiator upper hose is hot.
10) With engine idling, add coolant to radiator until level reaches the bottom of filler neck. Install radiator cap, making sure that the ear of cap lines is parallel to radiator.

WATER PUMP BELT TENSION

WARNING:
Disconnect negative cable at battery before checking and adjusting belt tension.

1) Inspect belt for cracks, cuts, deformation, wear and cleanliness. If it is necessary to replace belt, refer to WATER PUMP BELT in this section.

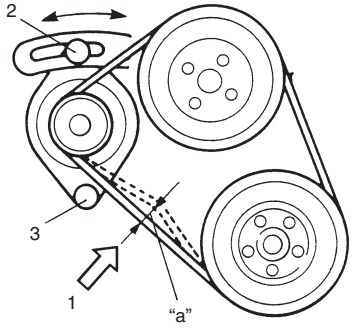

2) Check belt for tension. Belt is in proper tension when it deflects 8 to 10 mm (0.32 – 0.39 in.) under thumb pressure (about 10 kg or 22 lbs (1).).

   Belt tension "a": 8 – 10 mm (0.32 – 0.39 in.) as deflection

   NOTE:
   When replacing belt with a new one, adjust belt tension to 6 – 7 mm (0.24 – 0.27 in.).

3) If belt is too tight or too loose, adjust it to proper tension by displacing generator position.
4) Tighten belt adjusting bolt (2) and generator pivot bolt (3).
5) Connect negative cable at battery terminal.

ON-VEHICLE SERVICE

WARNING:
- **Check to make sure that engine coolant temperature is cold before removing any part of cooling system.**
- **Also be sure to disconnect negative cord from battery terminal before removing any part.**

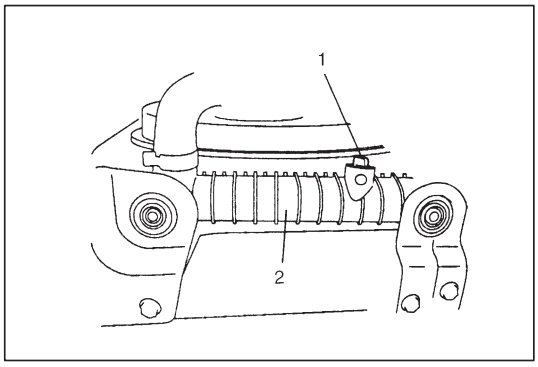

COOLING SYSTEM DRAINING

1) Remove radiator cap.
2) Loosen drain plug (1) on radiator (2) to drain coolant.
3) After draining coolant, be sure to tighten drain plug securely.
4) Fill cooling system. (Refer to COOLANT in GENERAL DESCRIPTION.)

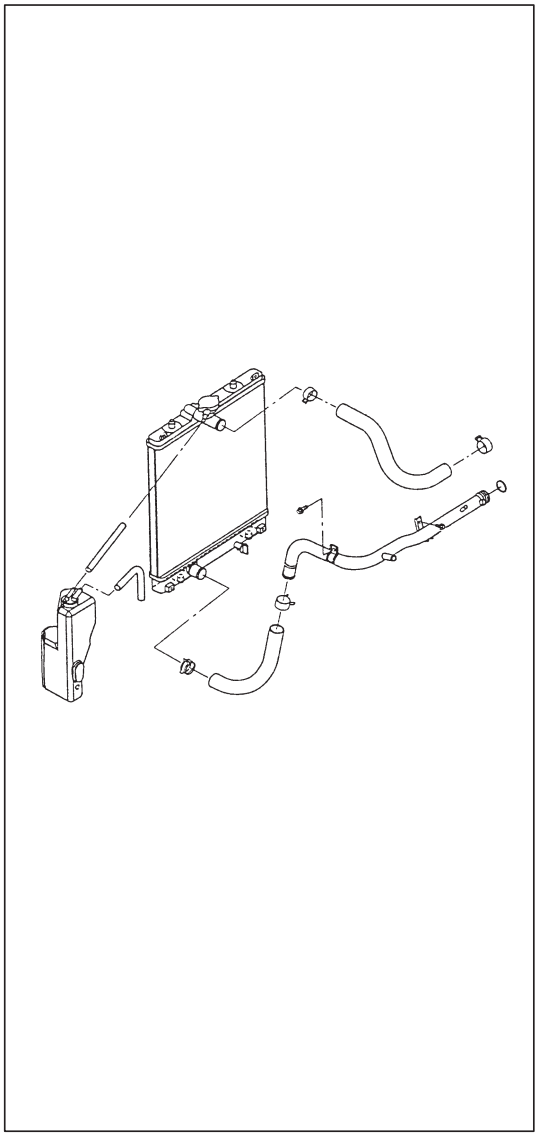

COOLING WATER PIPES OR HOSES

REMOVAL

1) Drain cooling system.
2) To remove these pipes or hoses, loosen clamp on each hose and pull hose end off.

INSTALLATION

Install removed parts in reverse order of removal procedure, noting the following.
- Tighten each clamp securely.
- Refill cooling system with proper coolant, referring to COOLANT in GENERAL DESCRIPTION.

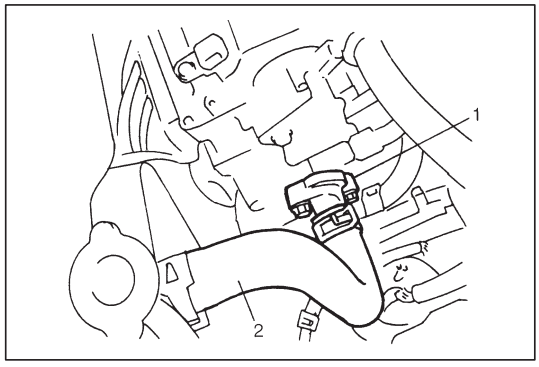

THERMOSTAT

REMOVAL

1) Drain coolant and tighten drain plug.
2) Remove radiator inlet hose (2) at thermostat cap.
3) Remove thermostat cap (1).

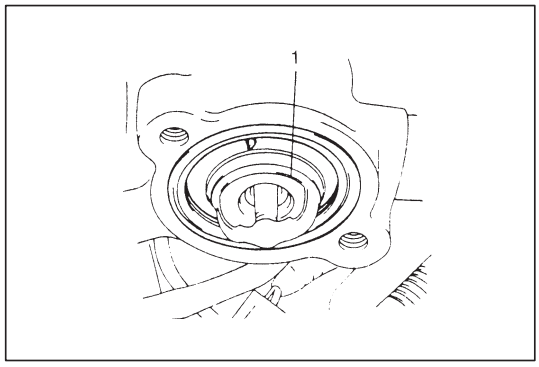

4) Remove thermostat (1).

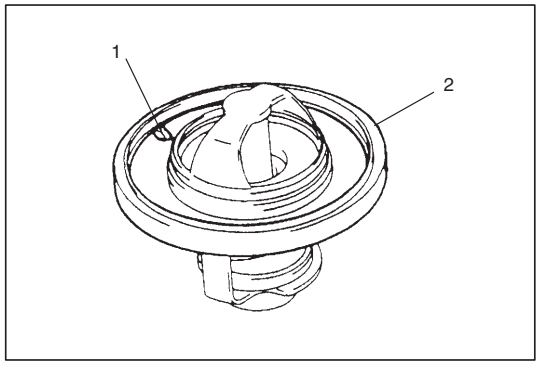

INSPECTION

1) Make sure that air bleed valve (1) of thermostat is clean. Should this valve be clogged, engine would tend to overheat.
2) Check to make sure that valve seat is free from foreign matters which would prevent valve from seating tight.
3) Check thermostat seal (2) for breakage, deterioration or any other damage.

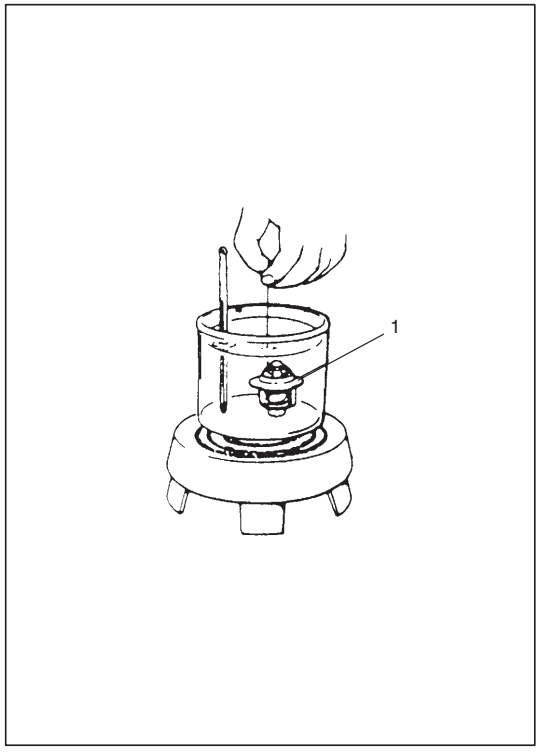

4) Check thermostatic movement of wax pellet as follows:
   (1) Immerse thermostat (1) in water, and heat water gradually.
   (2) Check that valve starts to open at specific temperature.
   (3) If valve starts to open at a temperature substantially below or above specific temperature, thermostat unit should be replaced with a new one. Such a unit, if reused, will bring about overcooling or overheating tendency.

Thermostat functional spec. ± 1.5°C (34°F)	
Temp. at which valve begins to open	88°C (190°F)
Temp. at which valve become fully open	100°C (212°F)
Valve lift	More than 8 mm at 100°C

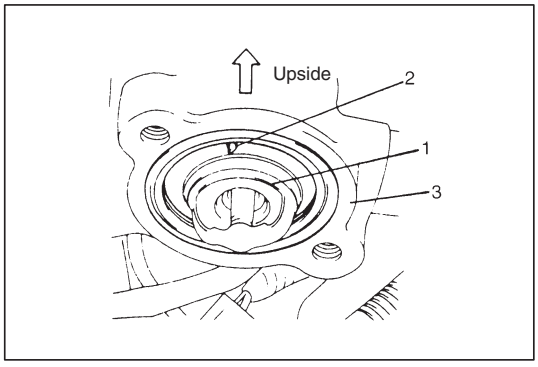

INSTALLATION

1) When positioning thermostat (1) on thermostat case (3), be sure to position it so that air bleed valve (2) comes at position as shown in figure.

2) Install thermostat cap to thermostat case.
3) Connect cooling water hose.
4) Fill cooling system (refer to COOLING SYSTEM FLUSH AND REFILL in this section).
5) After installation, check each part for leakage.

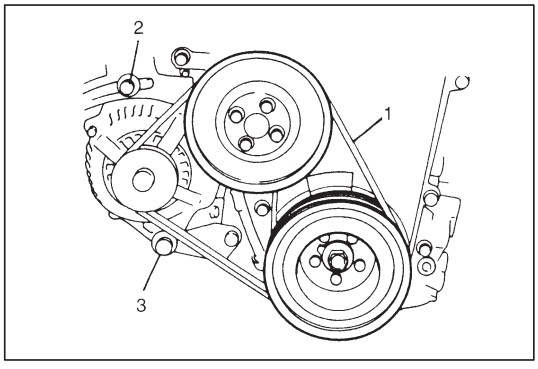

WATER PUMP BELT

REMOVAL

1) Disconnect negative cable at battery.
2) Loosen drive belt adjusting bolt (2) and generator pivot bolt (3). When servicing car equipped with A/C, remove compressor drive belt before removing water pump belt (1).
3) Slacken belt by displacing generator and then remove it.

INSTALLATION

1) Install belt to water pump pulley, crankshaft pulley and generator pulley.
   When servicing car equipped with A/C, install compressor drive belt, too.
2) Adjust belt tension.
   For Adjustment of compressor drive belt tension, refer to Section 1B.
3) Tighten water pump belt adjusting bolt and pivot bolt.
4) Connect negative cable at battery.

WATER PUMP BELT TENSION INSPECTION AND ADJUSTMENT

For this inspection or adjustment, refer to WATER PUMP BELT TENSION.

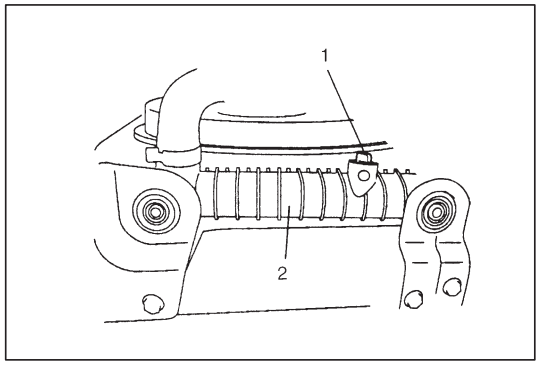

RADIATOR

REMOVAL

1) Disconnect negative cable at battery.
2) Drain cooling system by loosening drain plug (1) of radiator (2).
3) Disconnect coupler of cooling fan motor.
4) Remove front bumper (see Section 9).
5) Remove reservoir.

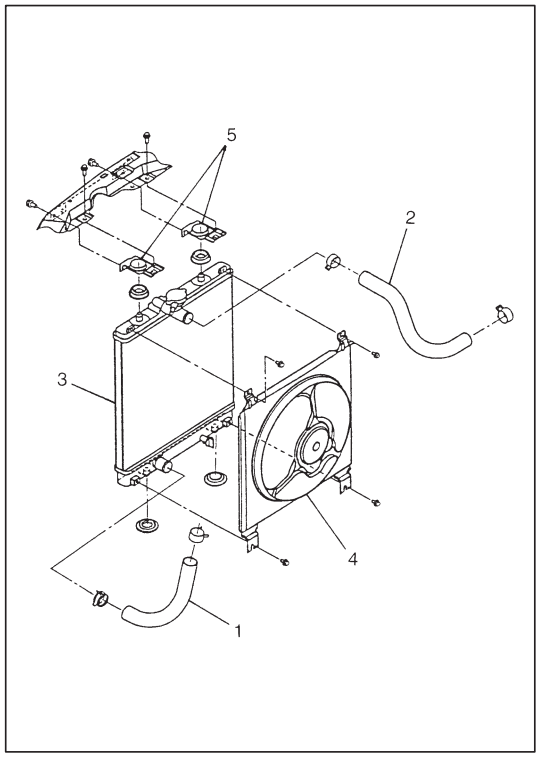

6) Disconnect radiator inlet (2) and outlet hoses (1) from radiator (3).
7) Remove cooling fan assembly (4) from radiator.
8) Remove radiator support upper brackets (5) and then remove radiator.

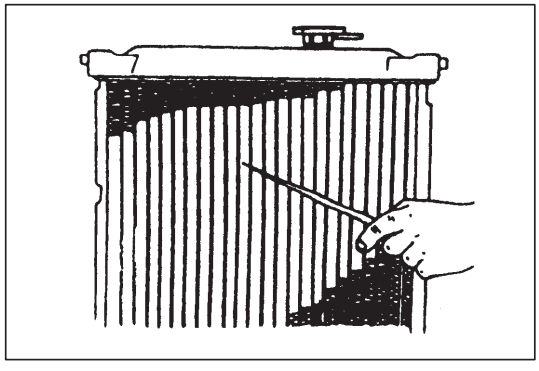

INSPECTION

Check radiator for leakage or damage. Straighten bent fins, if any.

CLEANING

Clean frontal area of radiator cores.

INSTALLATION

Reverse removal procedures.

NOTE:

- **Refill cooling system with proper coolant referring to COOLANT in GENERAL DESCRIPTION.**
- **After installation, check each joint for leakage.**

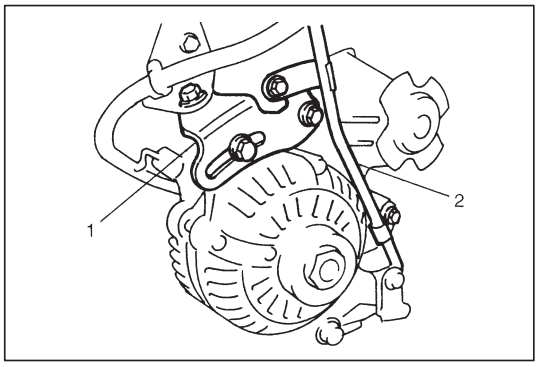

WATER PUMP

1) Disconnect negative cable at battery.
2) Drain cooling system.
3) Remove timing belt and tensioner refer to TIMING BELT AND TENSIONER of SECTION 6A1.
4) Remove generator adjusting arm (1).
5) Remove oil level gauge guide (2) with oil level gauge.

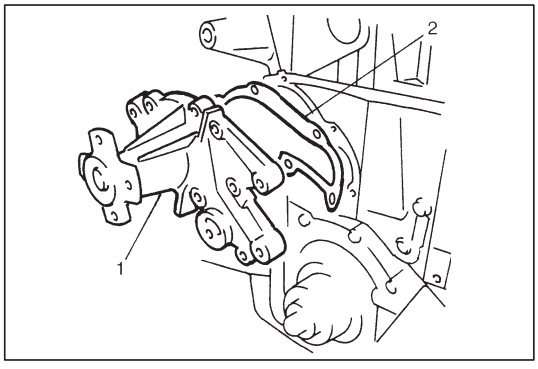

6) Remove water pump (1), gasket (2) and rubber seal.

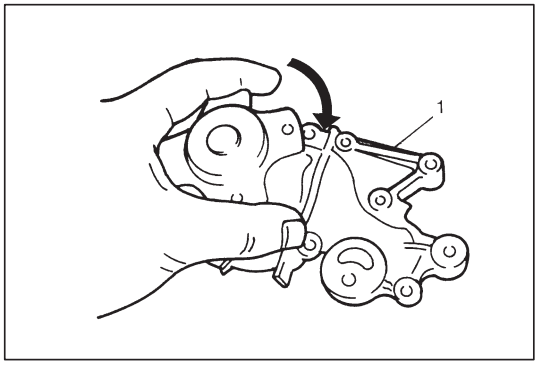

INSPECTION

NOTE:

Do not disassemble water pump.

If any repair is required on pump, replace it as assembly.

Rotate water pump (1) by hand to check for smooth operation.

If pump does not rotate smoothly or makes abnormal noise, replace it.

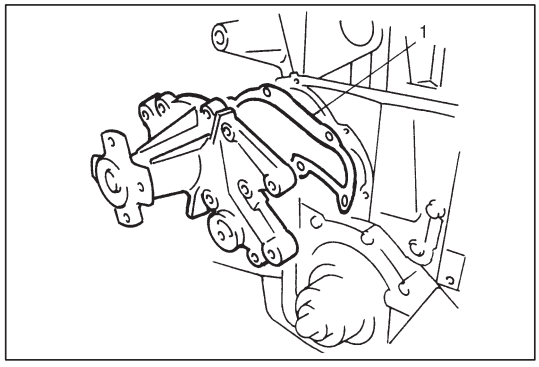

INSTALLATION

1) Install new pump gasket (1) to cylinder block.

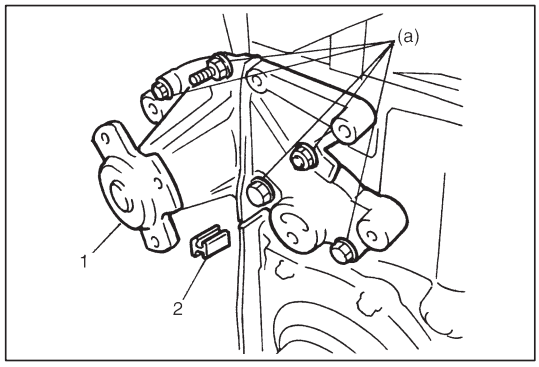

2) Install water pump (1) to cylinder block.

   Tightening Torque
   (a): 11 N·m (1.1 kg-m, 8.0 lb-ft)

3) After installing water pump, install rubber seal (2) between water pump and oil pump.
4) Install belt tensioner, timing belt and timing belt outside cover refer to TIMING BELT AND TENSIONER of SECTION 6A1.

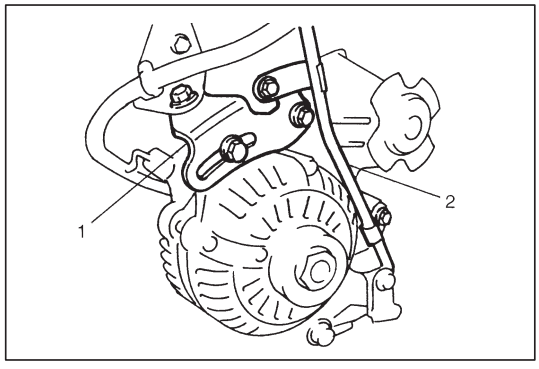

5) Install generator adjusting arm (1).
6) With engine oil applied to O-ring, install oil level gauge guide (2).
7) Adjust water pump belt tension. (Refer to WATER PUMP BELT TENSION of MAINTENANCE in this section.)
8) Fill cooling system.
9) Connect negative cable at battery.
10) After installation, check each part for leakage.

REQUIRED SERVICE MATERIAL

MATERIAL	USE
Ethylene glycol base coolant (Anti-freeze/Anti-corrosion coolant)	Engine cooling system for improving cooling efficiency and for protection against rusting.

SECTION 6C

ENGINE FUEL

WARNING:
For vehicles equipped with Supplemental Restraint (Air Bag) System:

- **Service on and around the air bag system components or wiring must be performed only by an authorized SUZUKI dealer. Refer to "Air Bag System Components and Wiring Location View" under "General Description" in air bag system section in order to confirm whether you are performing service on or near the air bag system components or wiring. Please observe all WARNINGS and "Service Precautions" under "On-Vehicle Service" in air bag system section before performing service on or around the air bag system components or wiring. Failure to follow WARNINGS could result in unintentional activation of the system or could render the system inoperative. Either of these two conditions may result in severe injury.**
- **Technical service work must be started at least 90 seconds after the ignition switch is turned to the "LOCK" position and the negative cable is disconnected from the battery. Otherwise, the system may be activated by reserve energy in the Sensing and Diagnostic Module (SDM).**

CONTENTS

CAUTION:
The engine of this vehicle requires the use of unleaded fuel only. Use of leaded and/or low lead fuel can result in engine damage and reduce the effectiveness of the emission control system.

GENERAL DESCRIPTION

FUEL SYSTEM

The main components of the fuel system are fuel tank, fuel pump assembly (with fuel filter, fuel level gauge, fuel pressure regulator and fuel cut valve), fuel feed line and fuel vapor line.
For the details of fuel flow and fuel vapor flow, refer to “ENGINE AND EMISSION CONTROL SYSTEM” section.

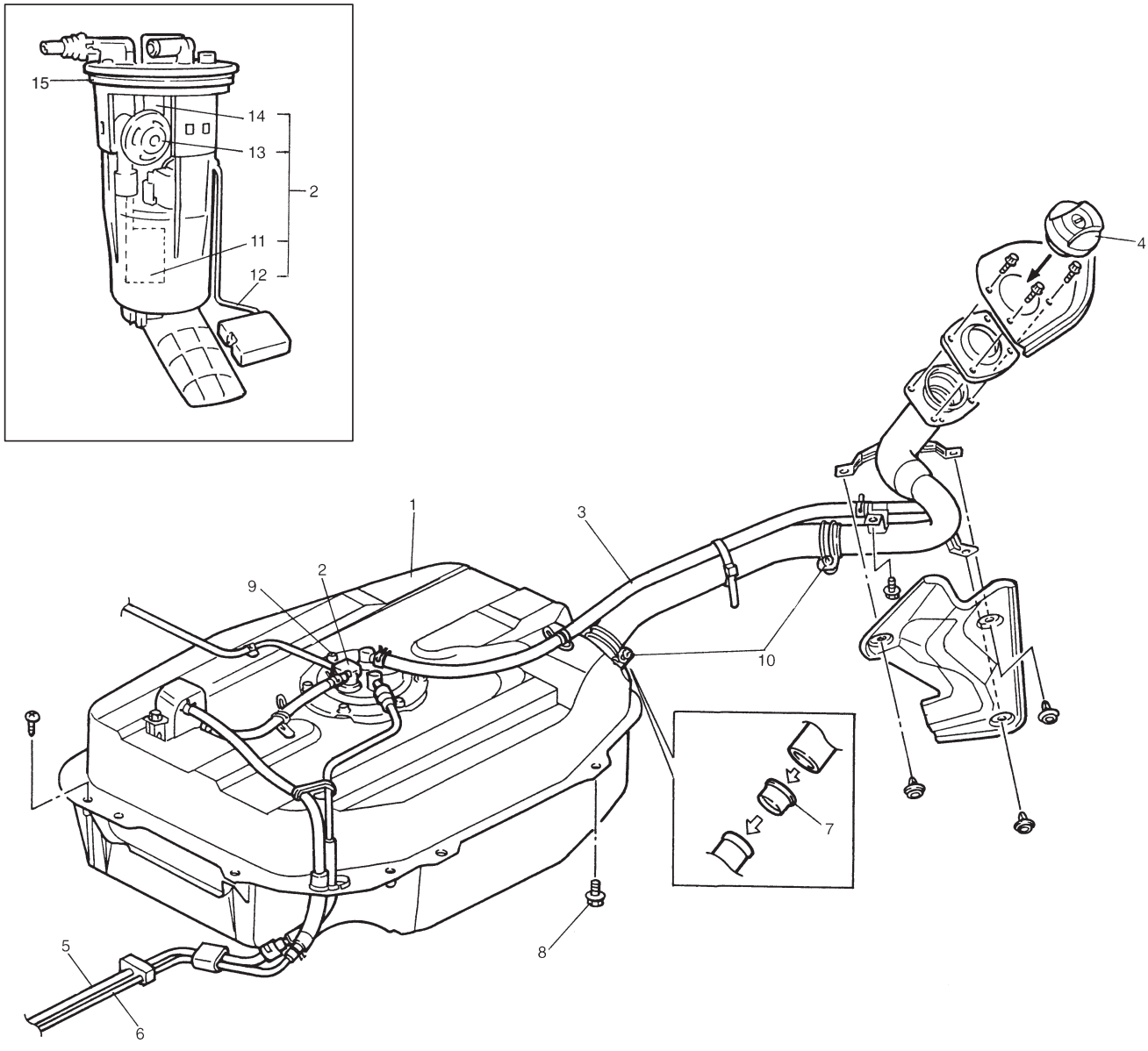

1. Fuel tank
2. Fuel pump assembly
3. Breather hose
4. Fuel filler cap
5. Fuel feed line
6. Fuel vapor line (vehicle with EVAP canister only)
7. Fuel tank inlet valve
8. Fuel tank bolts
9. Fuel pump bolts
10. Fuel filler hose clamp
11. Fuel filter
12. Fuel level gauge
13. Fuel pressure regulator
14. Fuel cut valve
15. Fuel pump gasket

ON-VEHICLE SERVICE

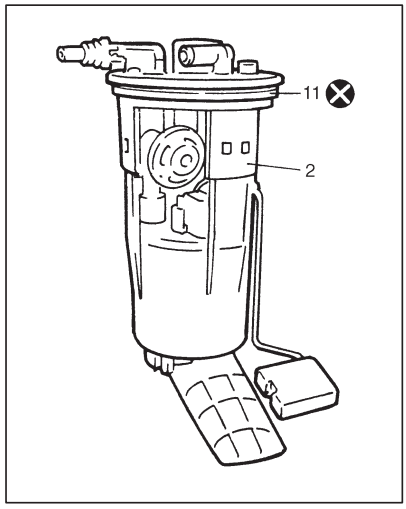

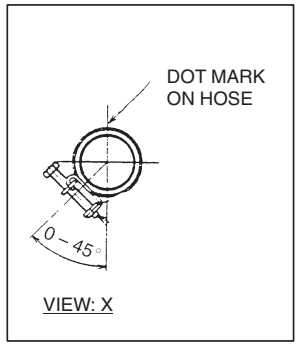

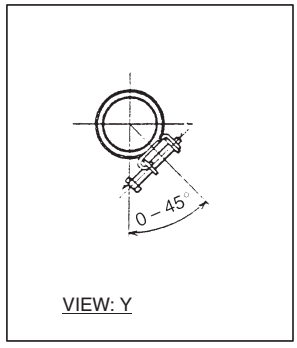

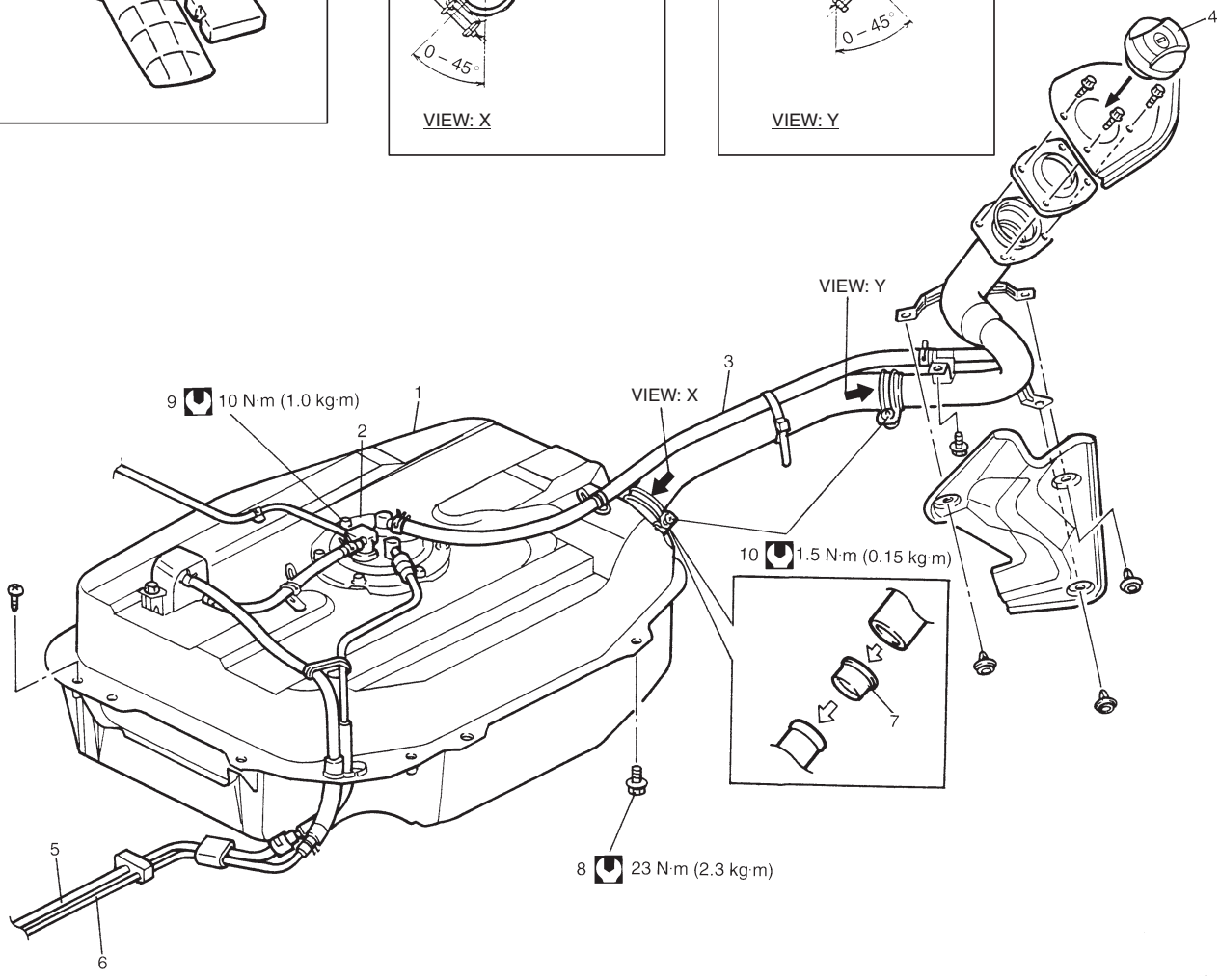

1. Fuel tank
2. Fuel pump assembly

   CAUTION:
   Do not disassemble fuel pump assembly. Disassembly will spoil its original performance.

3. Breather hose
4. Fuel filler cap
5. Fuel feed line
6. Fuel vapor line (vehicle with EVAP canister only)
7. Fuel tank inlet valve
8. Fuel tank bolts
9. Fuel pump bolts
10. Fuel filler hose clamp
11. Fuel pump gasket

: Tightening Torque
: Do not reuse

With short pipe, fit hose as far as it reaches pipe joint as shown.

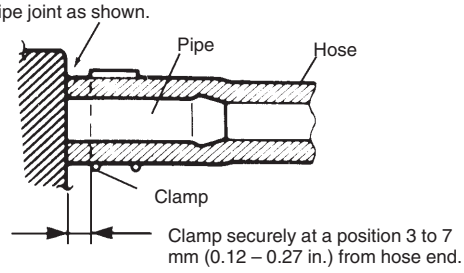

With following type pipe, fit hose as far as its peripheral projection as shown.

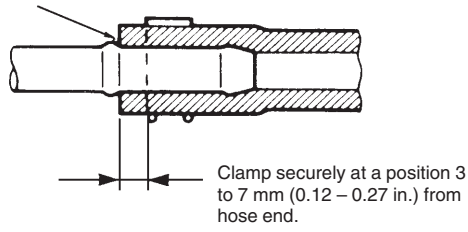

With bent pipe, fit hose as far as its bent part as shown or till pipe is about 20 to 30 mm (0.79-1.18 in.) into the hose.

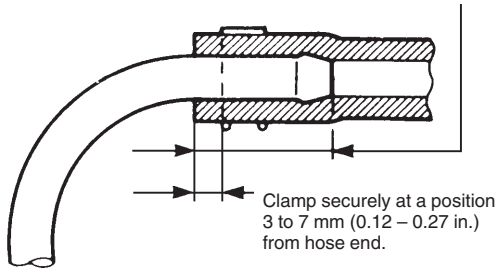

With straight pipe, fit hose till pipe is about 20 to 30 mm (0.79-1.18 in.) in the hose.

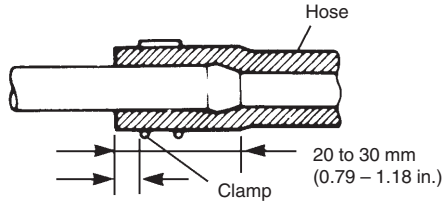

Clamp securely at a position 3 to 7 mm (0.12 – 0.27 in.) from hose end.

With red marked pipe, fit hose till hose end reaches red mark on pipe.

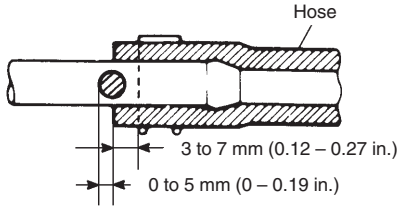

For fuel tank filler hose, insert it to spool or welding-bead.

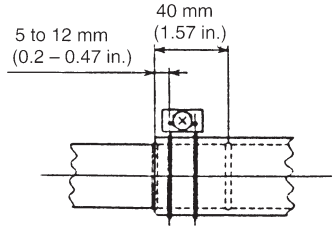

WARNING:

Before attempting service of any type on fuel system, following cautions should be always observed.

- **Disconnect negative cable at battery.**
- **DO NOT smoke, and place "NO SMOKING" signs at work area.**
- **Be sure to have CO_2 fire extinguisher handy.**
- **Be sure to perform work in a well-ventilated area and away from any open flames (such as gas hot heater).**
- **Wear safety glasses.**
- **To relieve fuel vapor pressure in fuel tank, remove fuel filler cap from fuel filler neck and then reinstall it.**
- **As fuel feed line is still under high fuel pressure even after engine was stopped, loosening or disconnecting fuel feed line directly may cause dangerous spout of fuel to occur where loosened or disconnected.**
  Before loosening or disconnecting fuel feed line, make sure to relieve fuel pressure.
- **A small amount of fuel may be released after the fuel line is disconnected. In order to reduce the chance of personal injury, cover the fitting to be disconnected with a shop towel. Be sure to put that towel in an approved container when disconnection is completed.**
- **Note that fuel hose connection varies with each type of pipe. Be sure to connect and clamp each hose correctly referring to the figure.**

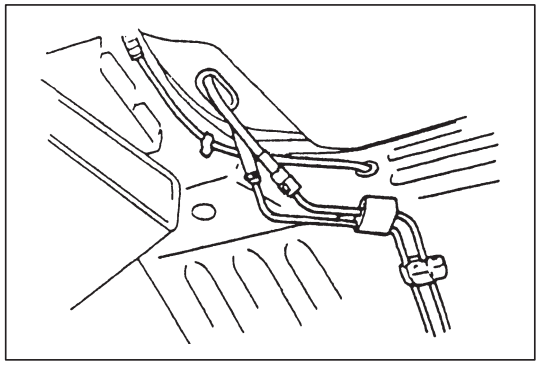

FUEL LINES

Due to the fact that fuel feed line is under high pressure, use special care when servicing it.

INSPECTION

Visually inspect fuel lines for evidence of fuel leakage, hose crack and deterioration, or damage.
Make sure that all clamps are secure.
Replace parts as needed.

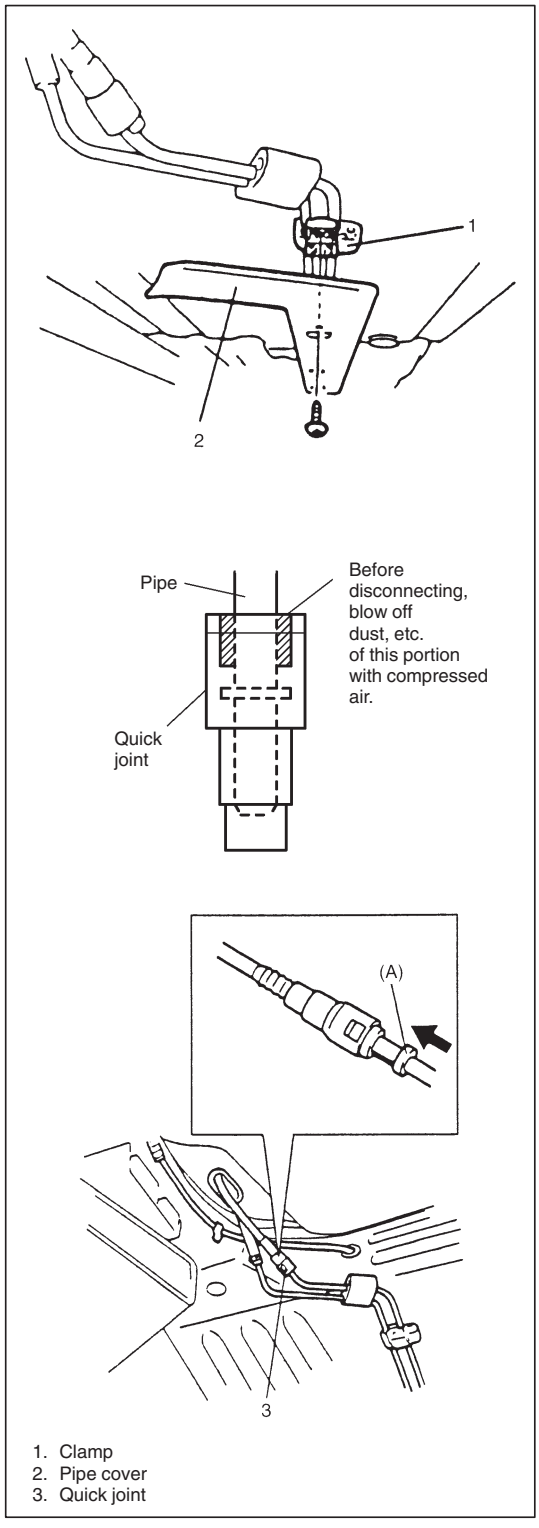

1. Clamp
2. Pipe cover
3. Quick joint

FUEL PIPE

REMOVAL

1) Relieve fuel pressure in fuel feed line.
2) Disconnect negative cable at battery.
3) Remove steering gear box assembly. Refer to Section 3B for details.
4) Remove pipe cover (2) from vehicle.
5) Disconnect fuel pipe joint and fuel hoses from the front end and the rear end of each fuel pipe.
   For quick joint (3), disconnect it as follows:
   a) Remove mud, dust and/or foreign material between pipe and joint by blowing compressed air.
   b) Unlock joint lock by inserting special tool between pipe and joint.

      Special Tool
      (A): 09919-47020

   c) Disconnect joint from pipe.

> **WARNING:**
> **A small amount of fuel may be released after fuel hose is disconnected. In order to reduce the chance of personal injury, cover hose and pipe to be disconnected with a shop towel.**
> **Be sure to put that towel in an approved container when disconnection is completed.**

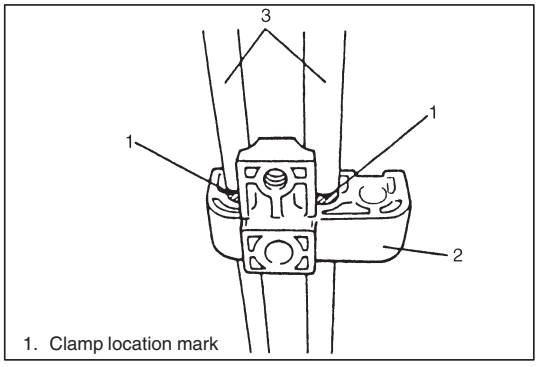

1. Clamp location mark

6) Mark the location of clamps on fuel pipes, so that the clamps can be reinstalled to where they were.
7) Remove pipes (3) with clamp (2) from vehicle.
8) Remove clamp from pipes.

INSTALLATION

1) Install clamps to marked location on pipes. If clamp is deformed or its claw is bent or broken, replace it with a new one.
2) Install pipes with pipe clamps to vehicle.

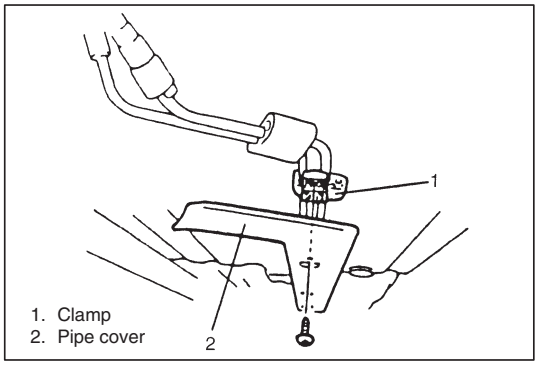

1. Clamp
2. Pipe cover

3) Connect fuel hoses and pipes to each pipe.

> **CAUTION:**
> **When connecting joint, clean outside surfaces of pipe where joint is to be inserted, push joint into pipe till joint lock clicks and check to ensure that pipes are connected securely, or fuel leak may occur.**

4) Install pipe cover (2) to vehicle.
5) Install steering gear box. Refer to Section 3B for details.
6) With engine “OFF” and ignition switch “ON”, check for fuel leaks.

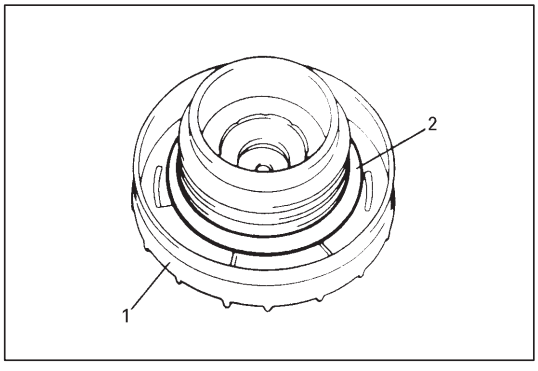

FUEL FILLER CAP

Remove cap (1), and check gasket (2) for even filler neck imprint, and deterioration or any damage. If gasket is in malcondition, replace cap.

NOTE:
If cap requires replacement, only a cap with the same features should be used. Failure to use correct cap can result in critical malfunction of system.

FUEL TANK INLET VALVE

WARNING:
Refer to the WARNING at the beginning of ON-VEHICLE SERVICE in this section.

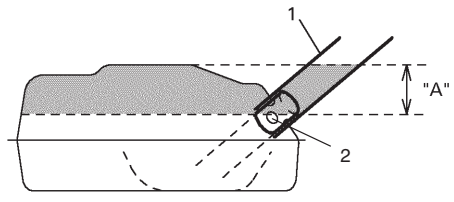

1. Fuel filler hose
2. Fuel tank inlet valve

REMOVAL

1) Remove fuel filler cap.
2) Insert hose of a hand operated pump into fuel filler hose and drain fuel in space “A” in the figure.

CAUTION:
Do not force pump hose into fuel tank, or pump hose may damage fuel tank inlet valve.

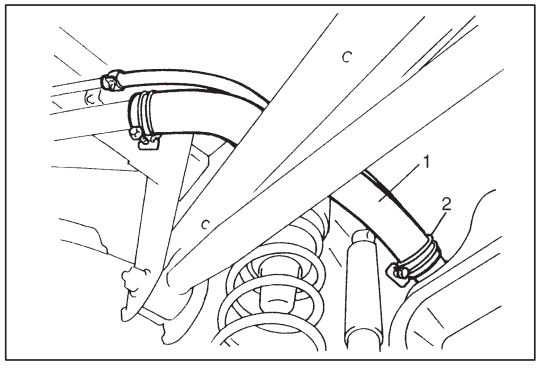

3) Hoist vehicle and remove clamp (2) and fuel filler hose (1) from fuel tank.

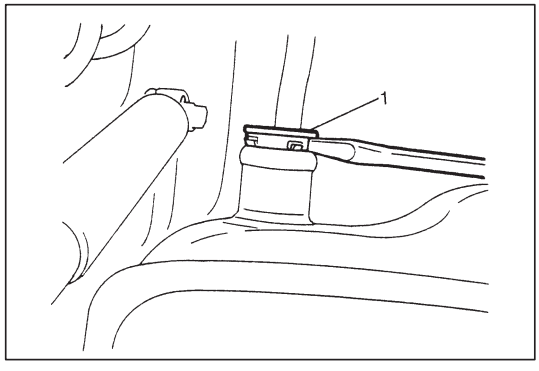

4) Remove fuel tank inlet valve (1) using flat-bladed screwdriver.

CAUTION:
Be careful not to damage fuel tank inlet valve (1) with flat-bladed screwdriver.

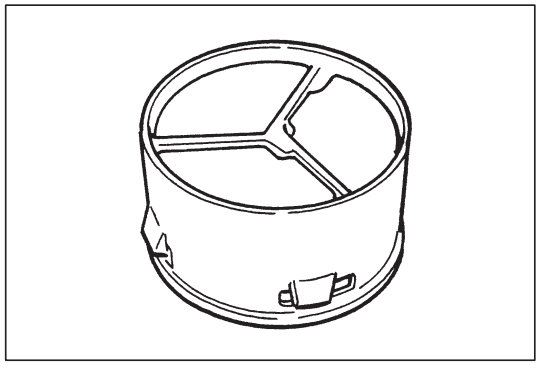

INSPECTION

Check fuel tank inlet valve for the followings.
- Damage
- Smooth opening and closing

If any damage or malfunction is found, replace.

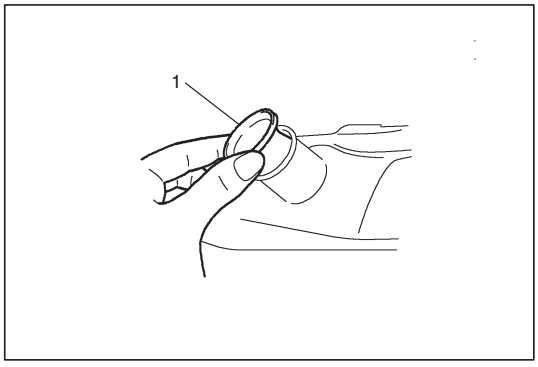

INSTALLATION

1) Install fuel tank inlet valve (1) to fuel tank.

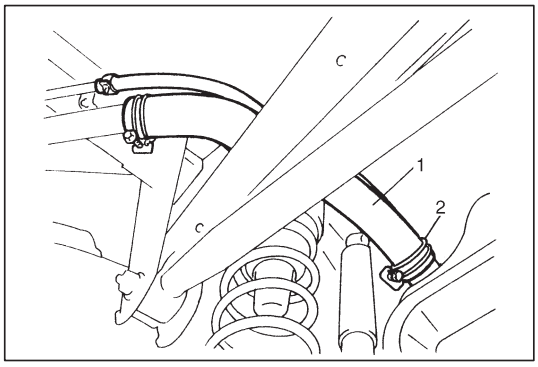

2) Install fuel filler hose (1) to fuel tank and secure it with clamp (2). For proper installation, refer to the figure on 6C-3.
3) Lower vehicle and install fuel filler cap.

FUEL TANK

FUEL TANK DRAINING PROCEDURE

WARNING:
- **This draining procedure will not remove all fuel. Do not attempt any service on tank using heat or flame as an explosion resulting in personal injury could occur.**
- **Never drain or store fuel in an open container due to the possibility of fire or explosion.**

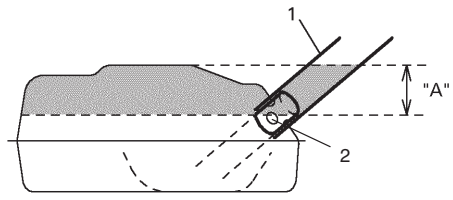

1. Fuel filler hose
2. Fuel tank inlet valve

1) Remove fuel filler cap.
2) Insert hose of a hand operated pump into fuel filler hose and drain fuel in space “A” in the figure.

CAUTION:
Do not force pump hose into fuel tank, or pump hose may damage fuel tank inlet valve.

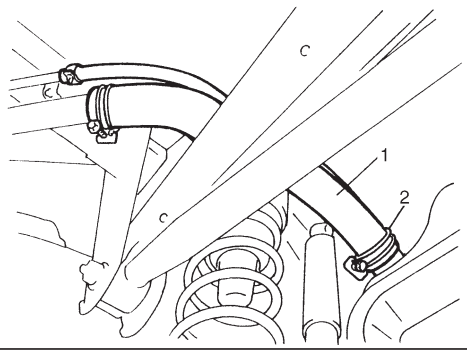

3) Hoist vehicle and remove clamp (2) and fuel filler hose (1) from fuel tank.

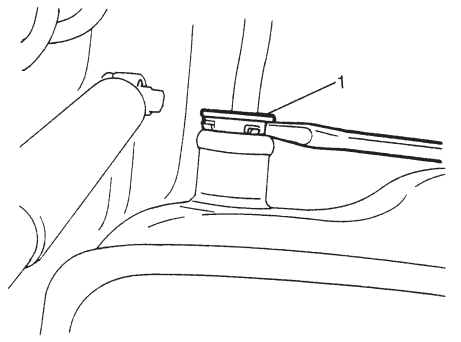

4) Remove fuel tank inlet valve (1) using flat-bladed screwdriver.

CAUTION:
Be careful not to damage fuel tank inlet valve (1) with flat-bladed screwdriver.

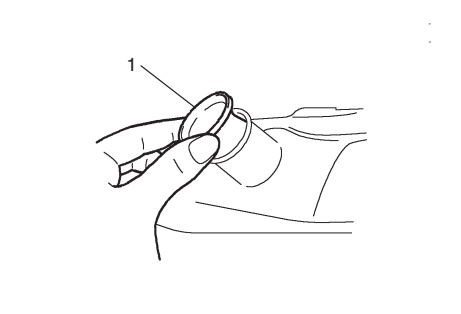

5) Drain remaining fuel in fuel tank with hand operated pump.
6) Reinstall fuel tank inlet valve (1) to fuel tank.

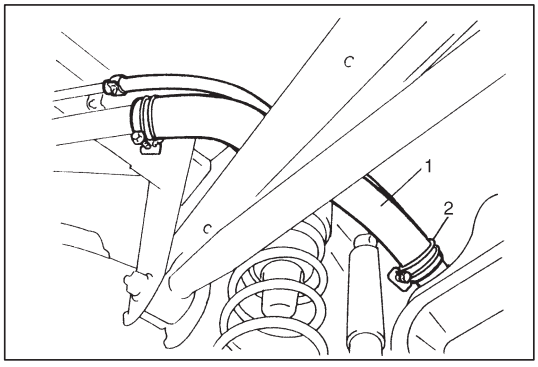

7) Reinstall fuel filler hose (1) to fuel tank and secure it with clamp (2).
   For proper installation, refer to the figure on 6C-3.
8) Lower vehicle and reinstall fuel filler cap.

REMOVAL

WARNING:
Refer to the WARNING at the beginning of ON-VEHICLE SERVICE in this section.

1) Relieve fuel pressure in fuel feed line.
2) Disconnect negative cable at battery.
3) Drain fuel tank, referring to steps 1) to 5) of FUEL TANK DRAINING PROCEDURE in this section.

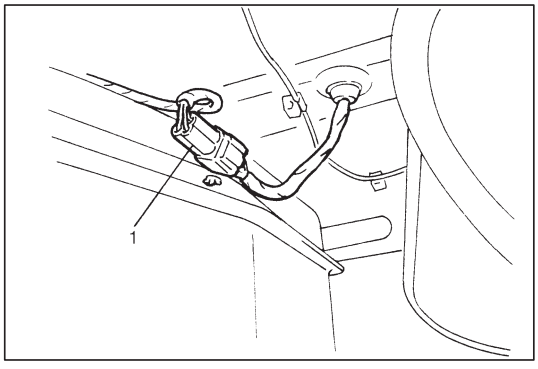

4) Disconnect fuel pump wire at coupler (1).

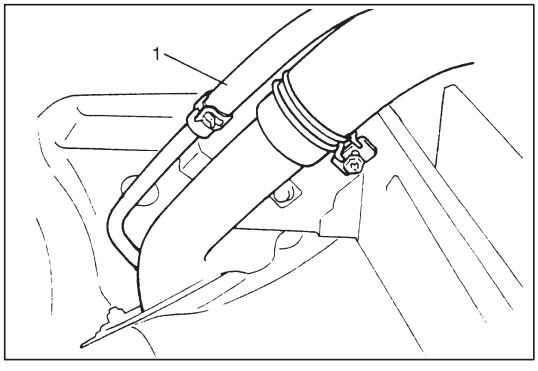

5) Disconnect breather hose (1) from filler neck.

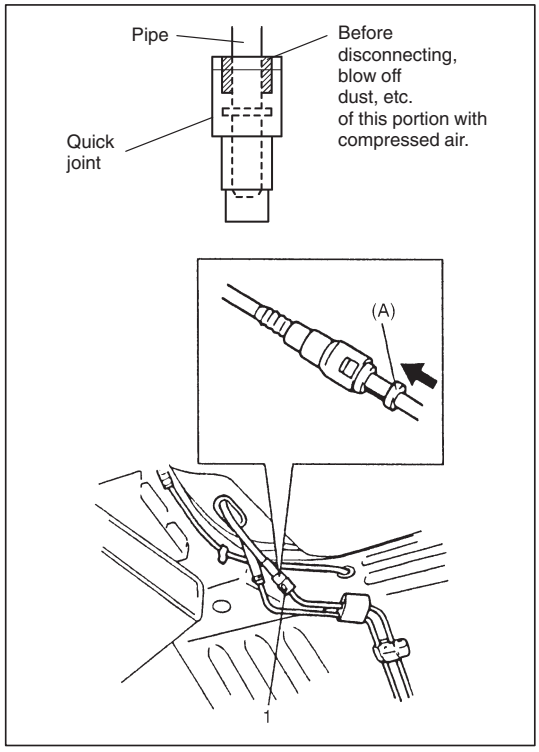

6) Disconnect fuel pipe joint and fuel hoses from fuel pipes.
   For quick joint (1), disconnect it as follows:
   a) Remove mud, dust and/or foreign material between pipe and joint by blowing compressed air.
   b) Unlock joint lock by inserting special tool between pipe and joint.

      Special Tool
      (A): 09919-47020

   c) Disconnect joint from pipe.

> **WARNING:**
> **A small amount of fuel may be released after the fuel hose is disconnected. In order to reduce the chance of personal injury, cover the hose and pipe to be disconnected with a shop towel. Be sure to put that towel in an approved container when disconnection is completed.**

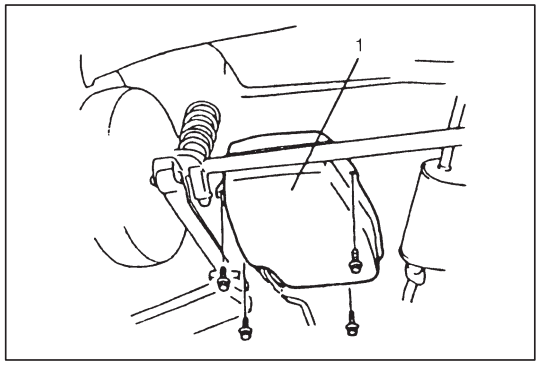

7) Remove fuel tank (1) from vehicle.

INSPECTION

After removing fuel tank, check hoses and pipes connected to fuel tank for leaks, loose connections, deterioration or damage. Also check fuel pump assembly gaskets for leaks, visually inspect fuel tank for leaks and damage.
Replace any damaged or malconditioned parts.

FUEL TANK PURGING PROCEDURE

WARNING:
This purging procedure will NOT remove all fuel vapor. Do not attempt any repair on tank using heat or flame as an explosion resulting in personal injury could occur.

Following procedure is used purging fuel tank.

1) After removing fuel tank, remove all hoses, pipes, fuel pump assembly from fuel tank.
2) Drain all remaining fuel from tank.
3) Fill tank with warm water or tap water, and shake it well and then drain. Repeat this cycle until inside of tank is clean.
   Replace tank if its inside is rusty.
4) Completely flush out remaining water after washing.

CAUTION:
Never remain water in fuel tank after washing, or fuel tank inside will get corrosion.

INSTALLATION

1) If parts have been removed from fuel tank, install them before installing fuel tank to vehicle.

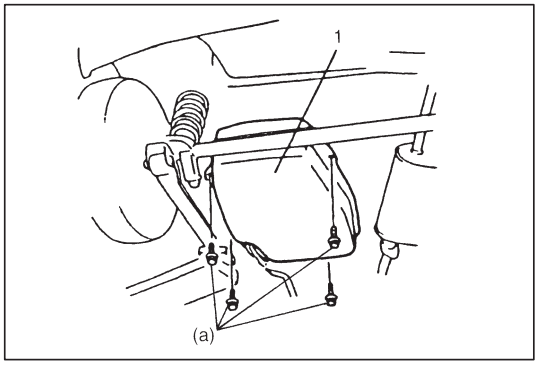

2) Install fuel tank (1) to vehicle.

   Tightening Torque
   (a): 23 N·m (2.3 kg-m, 17.0 lb-ft)

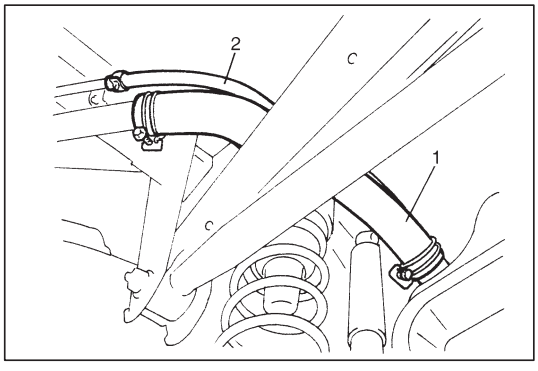

3) Connect fuel filler hose (1) to fuel tank and breather hose (2) to filler neck and clamp them securely.
   For proper installation, refer to the figure on 6C-3.

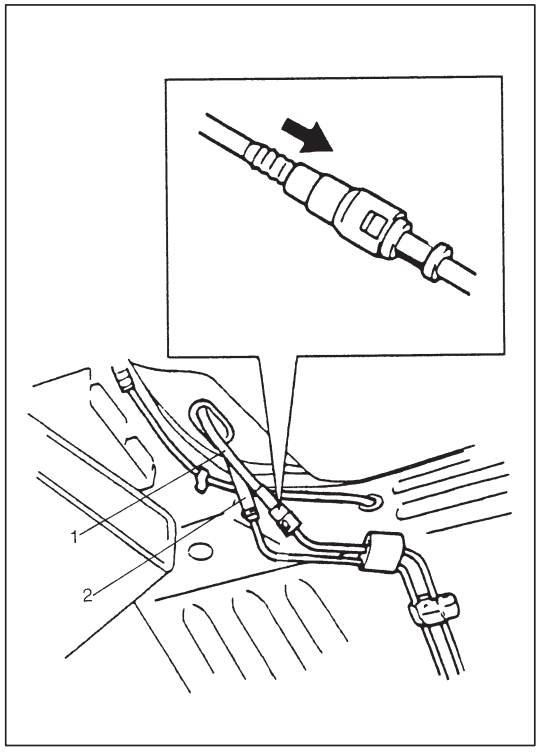

4) Connect fuel hose (1) and vapor hose (2) to pipes as shown in figure and clamp them securely.

CAUTION:
When connecting joint, clean outside surfaces of pipe where joint is to be inserted, push joint into pipe till joint lock clicks and check to ensure that pipes are connected securely, or fuel leak may occur.

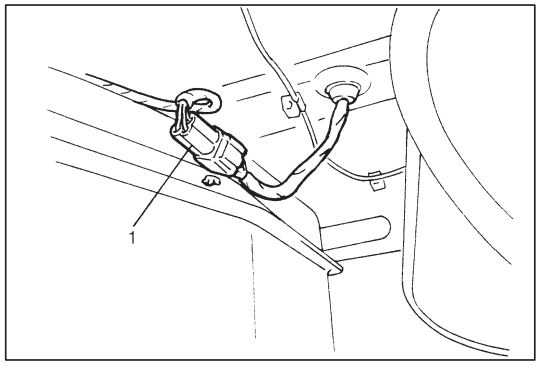

5) Connect fuel pump wire at coupler (1).

6) Connect negative cable at battery.
With engine “OFF” and ignition switch “ON”, check for fuel leaks.

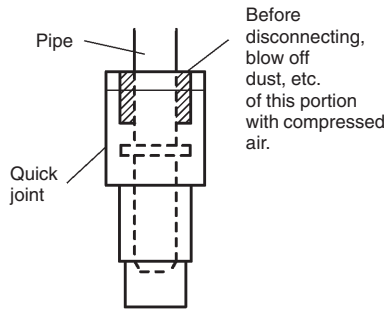

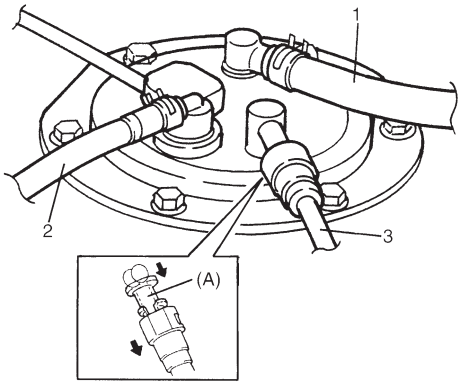

FUEL PUMP ASSEMBLY (WITH FUEL FILTER, FUEL LEVEL GAUGE, FUEL PRESSURE REGULATOR AND FUEL CUT VALVE)

WARNING:
Refer to the WARNING at the beginning of ON-VEHICLE SERVICE in this section.

CAUTION:
Do not disassemble fuel pump assembly. Disassembly will spoil its original performance.

REMOVAL

1) Remove fuel tank from vehicle. Refer to FUEL TANK REMOVAL in this section.
2) Disconnect fuel breather hose (1), fuel vapor hose (2) and fuel feed hose (3) from fuel pump assembly.
   When disconnecting joint of fuel feed line from pipe, unlock joint by inserting special tool between pipe and joint lock first.

   Special Tool
   (A): 09919-47020

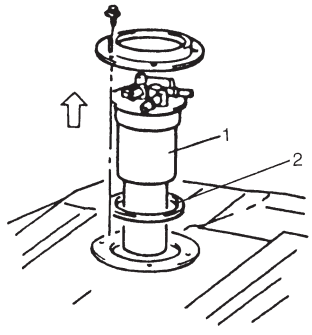

3) Remove fuel pump assembly (1) from fuel tank.

CAUTION:
Never reuse fuel pump gasket (2), or fuel leak may occur.

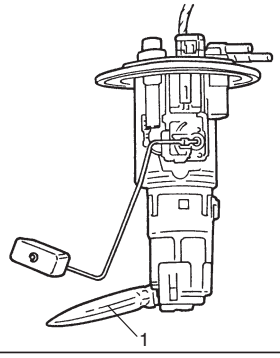

INSPECTION

Check fuel pump assembly for damage.
Check fuel suction filter (1) for evidence of dirt and contamination. If present, replace or clean and check for presence of dirt in fuel tank.
For inspection of fuel pump itself and fuel pressure regulator, refer to Section 6E of this manual.
For inspection of fuel level gauge, refer to Section 8C of this manual.

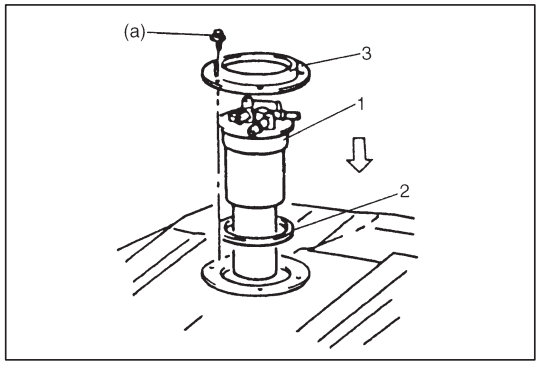

INSTALLATION

1) Clean mating surfaces of fuel pump assembly and fuel tank.
2) Install new gasket (2) and plate (3) to fuel pump assembly (1) then install fuel pump assembly to fuel tank.

Tightening Torque
(a): 10 N·m (1.0 kg-m, 7.5 lb-ft)

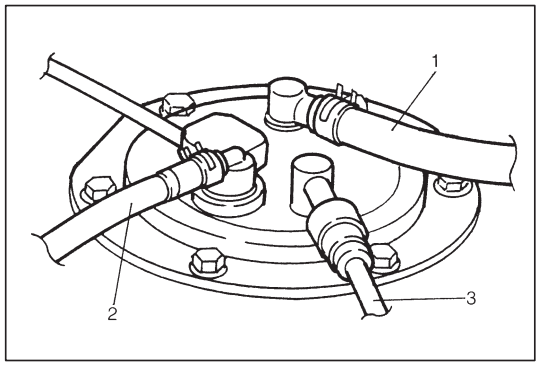

3) Connect fuel breather hose (1), fuel vapor hose (2) and fuel feed hose (3) to fuel pump assembly.

> **CAUTION:**
> **When connecting joint, clean outside surface of pipe where joint is to be inserted, push joint into pipe till joint lock clicks and check to ensure that pipes are connected securely, or fuel leak may occur.**

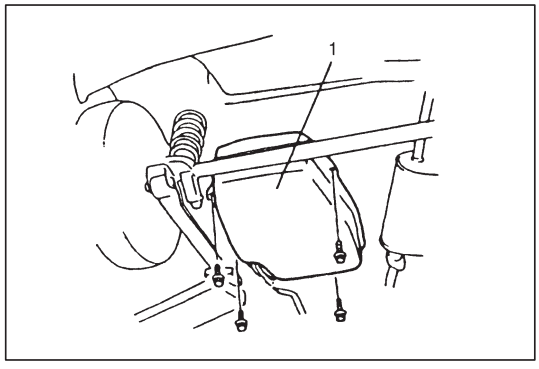

4) Install fuel tank (1) to vehicle. Refer to FUEL TANK INSTALLATION in this section.

SPECIAL TOOL

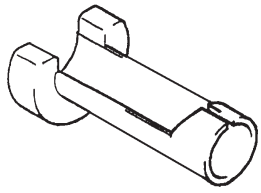

09919-47020
Quick joint remover

SECTION 6E

ENGINE AND EMISSION CONTROL SYSTEM

WARNING:
For vehicles equipped with Supplemental Restraint (Air Bag) System:

- **Service on and around the air bag system components or wiring must be performed only by an authorized SUZUKI dealer. Refer to "Air Bag System Components and Wiring Location View" under "General Description" in air bag system section in order to confirm whether you are performing service on or near the air bag system components or wiring. Please observe all WARNINGS and "Service Precautions" under "On-Vehicle Service" in air bag system section before performing service on or around the air bag system components or wiring. Failure to follow WARNINGS could result in unintentional activation of the system or could render the system inoperative. Either of these two conditions may result in severe injury.**
- **Technical service work must be started at least 90 seconds after the ignition switch is turned to the "LOCK" position and the negative cable is disconnected from the battery. Otherwise, the system may be activated by reserve energy in the Sensing and Diagnostic Module (SDM).**

CONTENTS

GENERAL DESCRIPTION

The engine and emission control system is divided into 4 major sub-systems: air intake system, fuel delivery system, electronic control system and emission control system.

Air intake system includes air cleaner, throttle body, IAC valve and intake manifold.

Fuel delivery system includes fuel pump, delivery pipe, fuel pressure regulator, etc. Electronic control system includes ECM, various sensors and controlled devices.

Emission control system includes EGR, EVAP and PCV system.

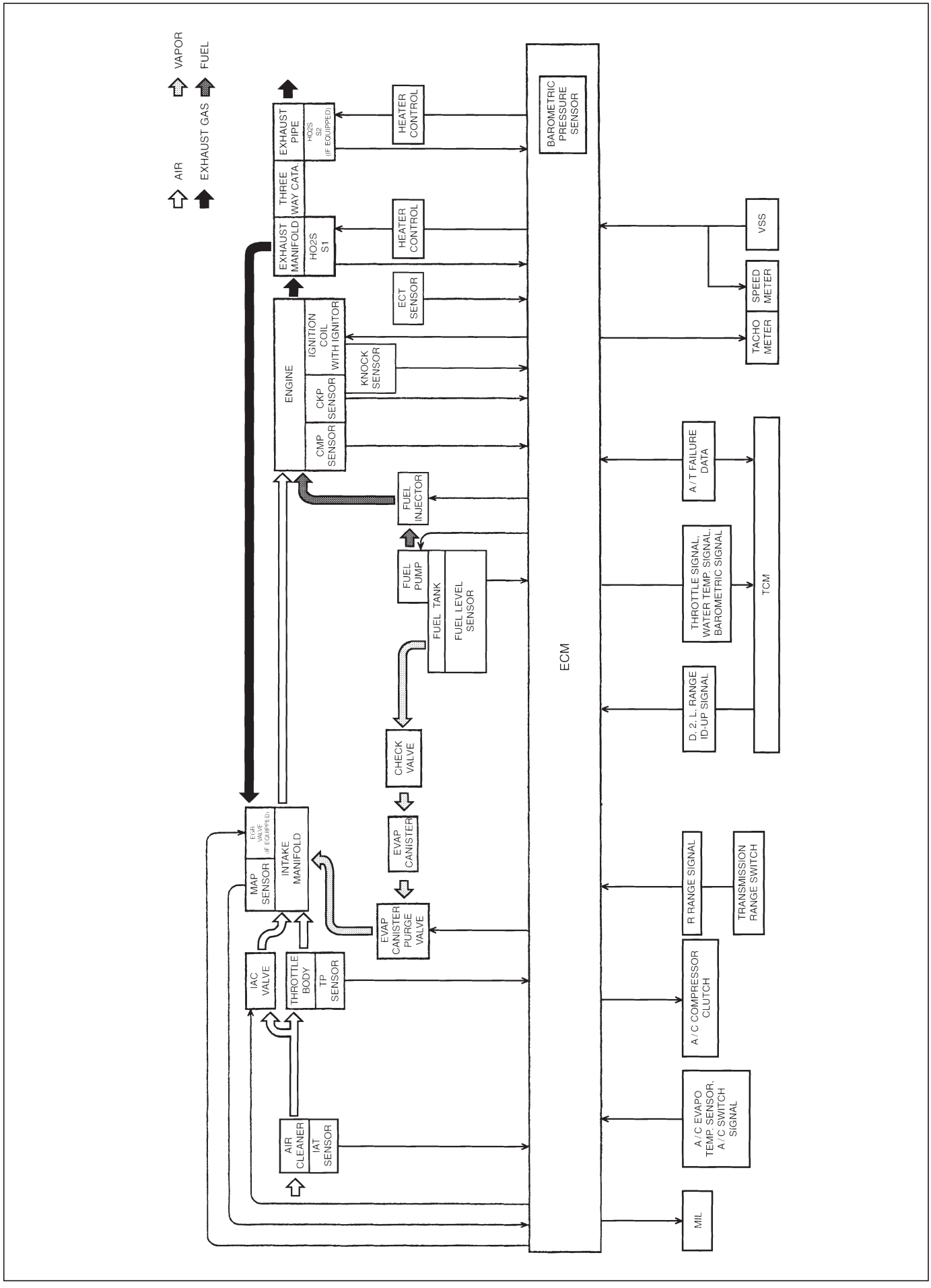
VAPOR
FUEL
AIR
EXHAUST GAS
EXHAUST PIPE
HO2S S2 (IF EQUIPPED)
THREE WAY CATA.
EXHAUST MANIFOLD
HO2S S1
HEATER CONTROL
HEATER CONTROL
BAROMETRIC PRESSURE SENSOR
ECT SENSOR
ENGINE
IGNITION COIL WITH IGNITOR
KNOCK SENSOR
CKP SENSOR
CMP SENSOR
FUEL INJECTOR
FUEL PUMP
FUEL TANK
FUEL LEVEL SENSOR
CHECK VALVE
EVAP CANISTER
EVAP CANISTER PURGE VALVE
EGR VALVE (IF EQUIPPED)
MAP SENSOR
INTAKE MANIFOLD
IAC VALVE
THROTTLE BODY
TP SENSOR
AIR CLEANER
IAT SENSOR
ECM
VSS
SPEED METER
TACHO METER
A/T FAILURE DATA
THROTTLE SIGNAL, WATER TEMP. SIGNAL, BAROMETRIC SIGNAL
TCM
D. 2. L. RANGE ID-UP SIGNAL
R RANGE SIGNAL
TRANSMISSION RANGE SWITCH
A/C COMPRESSOR CLUTCH
A/C EVAPO TEMP. SENSOR, A/C SWITCH SIGNAL
MIL

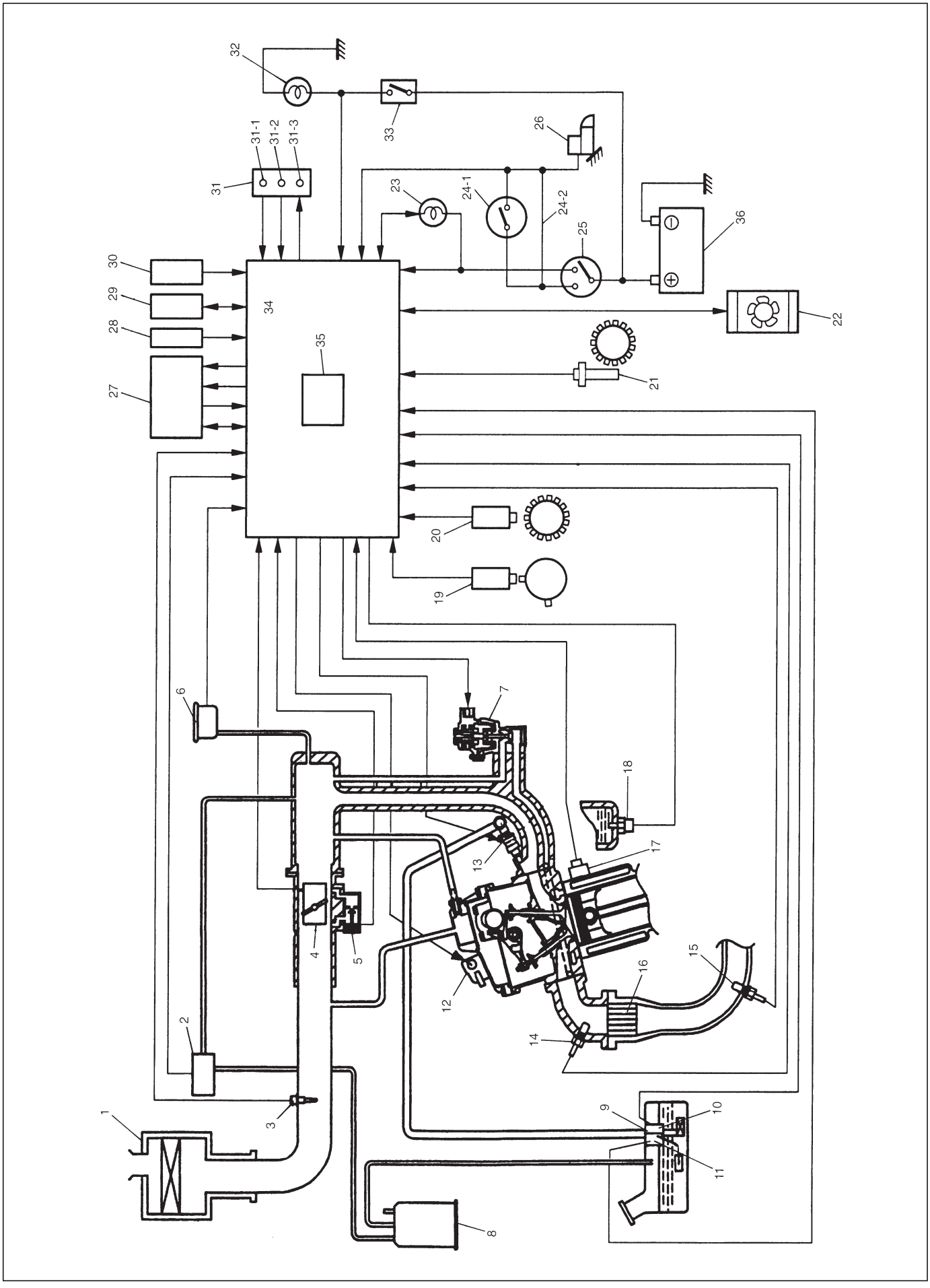
1
2
3
4
5
6
7
8
9
10
11
12
13
14
15
16
17
18
19
20
21
22
23
24-1
24-2
25
26
27
28
29
30
31
31-1
31-2
31-3
32
33
34
35
36

1. Air Cleaner
2. EVAP canister purge valve
3. IAT sensor
4. TP sensor
5. IAC valve
6. MAP sensor
7. EGR valve (if equipped)
8. EVAP canister
9. Tank pressure control valve (built-in fuel pump)
10. Fuel pump (with pressure regulator)
11. Fuel level sensor
12. Ignition coil assembly
13. Fuel injector
14. Heated Oxygen Sensor (HO2S)-1
15. Heated Oxygen Sensor (HO2S)-2 (if equipped)
16. Three way catalytic convertor
17. Knock sensor
18. ECT sensor
19. CMP sensor
20. CKP sensor
21. VSS
22. Radiator fan
23. Malfunction indicator lamp in combination meter

24-1. Transmission range switch (A/T)
24-2. Wiring harness (M/T)

25. Ignition switch
26. Starter magnetic switch
27. TCM
28. Transmission range switch
29. DLC
30. Electric load
31. Monitor connector (if equipped)

31-1. Diagnosis switch terminal (if equipped)
31-2. Test switch terminal (if equipped)
31-3. Duty output terminal (if equipped)

32. Stop lamp
33. Stop lamp switch
34. ECM
35. Barometric pressure sensor
36. Battery

AIR INTAKE SYSTEM

The main components of the air intake system are air cleaner (1), air cleaner outlet hose (2), throttle body (3), idle air control valve (4) and intake manifold (5).
The air (by the amount corresponding to the throttle valve (6) opening and engine speed) is filtered by the air cleaner (1), passes through the throttle body (3), is distributed by the intake manifold (5) and finally drawn into each combustion chamber.
When the idle air control valve (4) is opened according to the signal from ECM, the air (7) bypasses the throttle valve (6) through bypass passage and is finally drawn into the intake manifold (5).

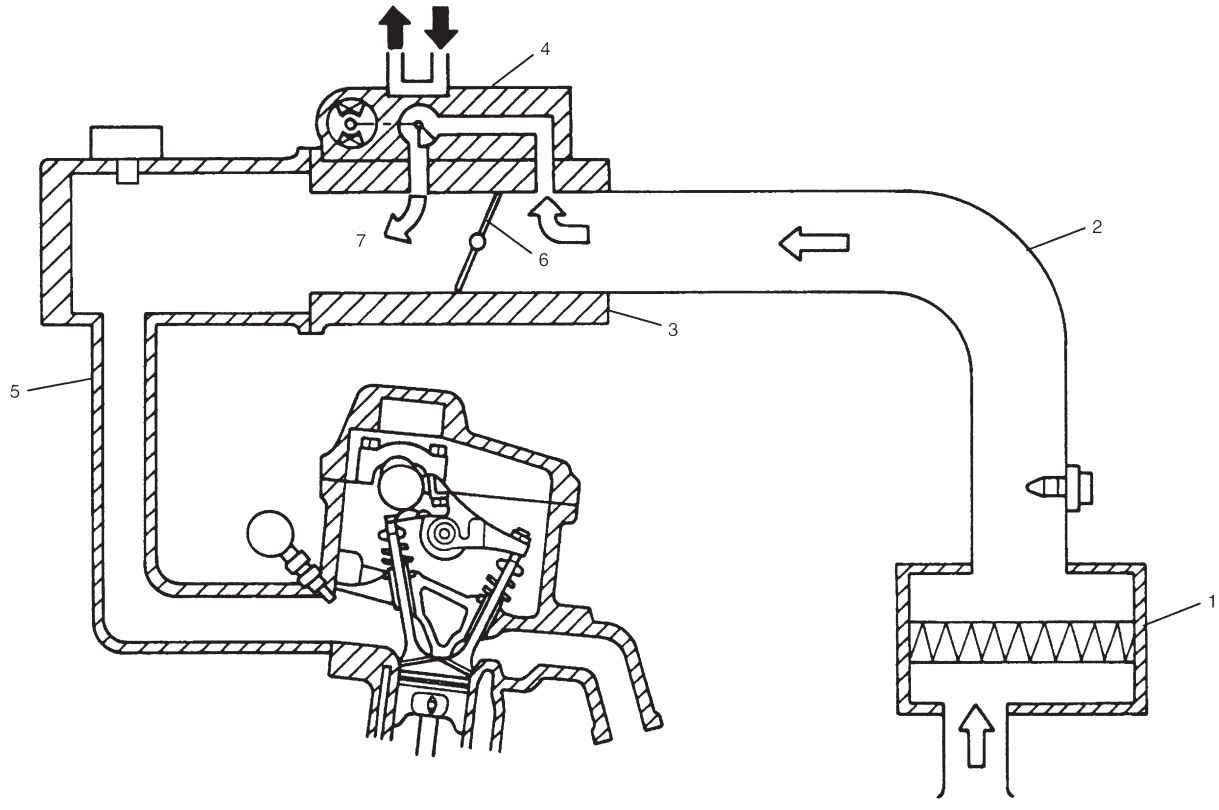

FUEL DELIVERY SYSTEM

The fuel system consists of fuel tank (1), fuel pump (2) (with built-in fuel filter (3) and fuel pressure regulator (4)), delivery pipe (5), injectors (6) and fuel feed line (7).
The fuel (8) in the fuel tank (1) is pumped up by the fuel pump (2), sent into delivery pipe (5) and injected by the injectors (6).
As the fuel pump assembly is equipped with built-in fuel filter (3) and fuel pressure regulator (4), the fuel (8) is filtered and its pressure is regulated before being sent to the delivery pipe (5).
The excess fuel from fuel pressure regulation process is returned back (9) into the fuel tank.
Also, fuel vapor generated in fuel tank is led through the fuel vapor line (10) into the EVAP canister (12).

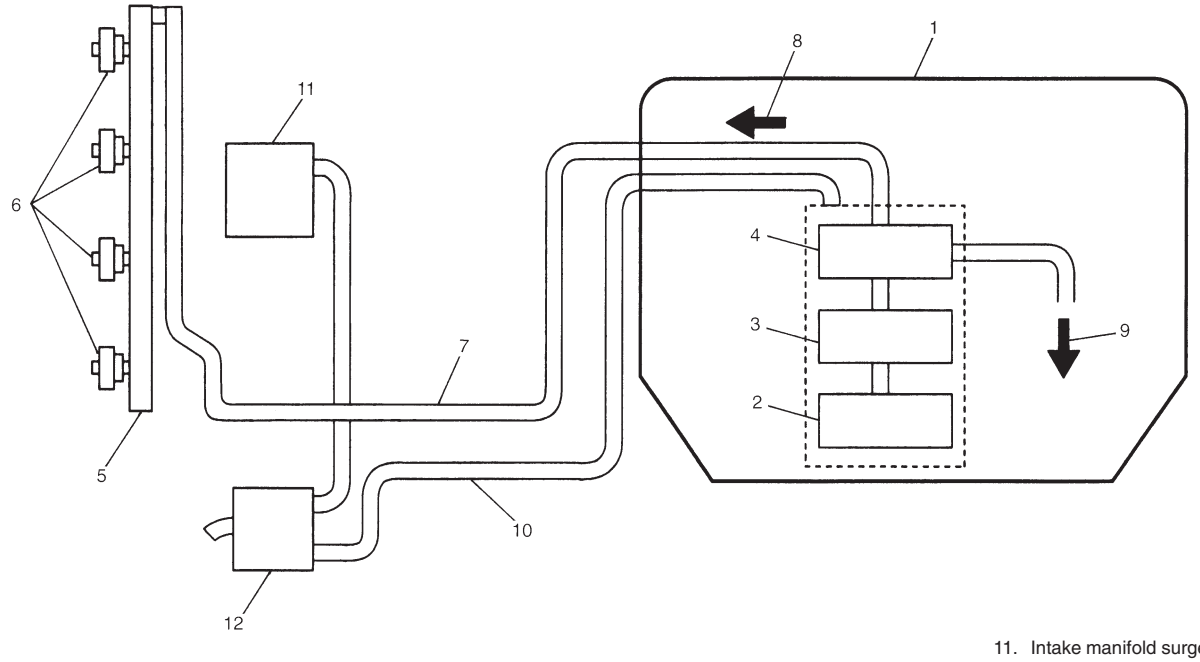

11. Intake manifold surge tank

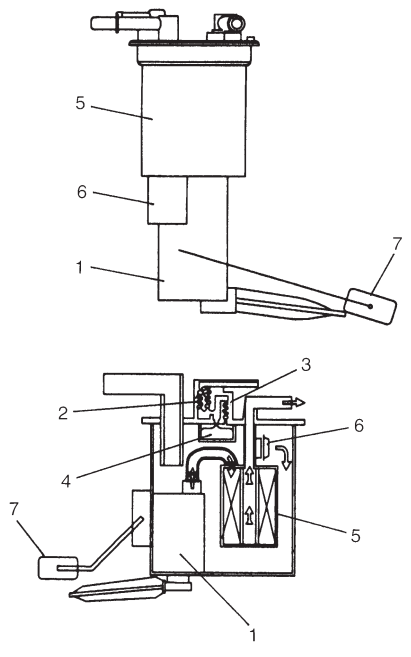

FUEL PUMP

An in-tank type electric pump has been adopted for the fuel pump (1). Incorporated in the pump assembly are;

- Tank pressure control valve (2) which keeps the pressure in the fuel tank constant, and prevents the fuel from spouting and tank itself from being deformed.
- Relief valve (3) which prevents the pressure in tank from rising excessively.
- Fuel cut valve (4) which closes as the float rises so that the fuel will not enter the canister when the fuel level in the tank rises high depending on the fuel level in the tank and the vehicle tilt angle.

Also, a fuel filter (5) and a fuel pressure regulator (6) are included and a fuel level gauge (7) is attached.
Addition of the fuel pressure regulator (6) to the fuel pump makes it possible to maintain the fuel pressure at constant level and ECM controls compensation for variation in the intake manifold pressure.

ELECTRONIC CONTROL SYSTEM

The electronic control system consists of 1) various sensors which detect the state of engine and driving conditions, 2) ECM which controls various devices according to the signals from the sensors and 3) various controlled devices.

Functionally, it is divided into nine sub systems:

- Fuel injection control system
- Idle speed control system
- Fuel pump control system
- A/C control system (if equipped)
- Radiator fan control system
- EGR system (if equipped)
- Evaporative emission control system
- Oxygen sensor heater control system
- Ignition control system

Also, with A/T model, ECM sends throttle valve opening signal, coolant temp. signal and barometric pressure signal to transmission control module to control A/T.

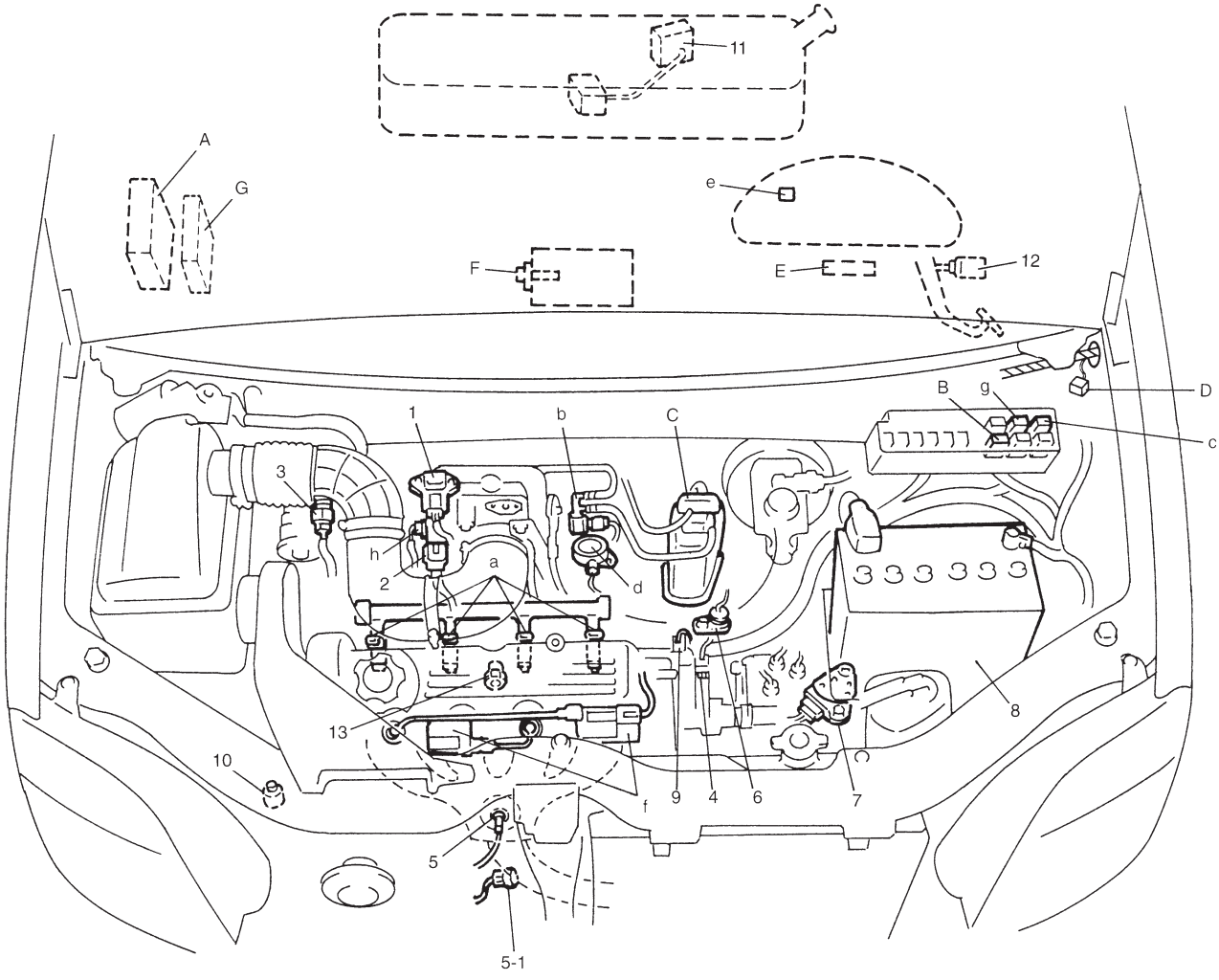

INFORMATION SENSORS
1. MAP sensor
2. TP sensor
3. IAT sensor
4. ECT sensor
5. Heated oxygen sensor-1
5-1. Heated oxygen sensor-2 (if equipped)
6. VSS
7. Transmission range switch (A/T)
8. Battery
9. CMP sensor
10. CKP sensor
11. Fuel level sensor (gauge) (in fuel tank)
12. Stop lamp switch
13. Knock sensor

CONTROL DEVICES
a: Fuel injector
b: EVAP canister purge valve
c: Fuel pump relay
d: EGR valve (step motor) (if equipped)
e: Malfunction indicator lamp
f: Ignition coil assembly
g: Radiator fan control relay
h: IAC valve

OTHERS
A: ECM
B: Main relay
C: EVAP canister
D: Monitor connector (If equipped)
E: Data link connector
F: A/C EVAP thermistor (if equipped)
G: Transmission control module (A/T)

ENGINE & EMISSION CONTROL INPUT/OUTPUT TABLE

INPUT \ OUTPUT		ELECTRIC CONTROL DEVICE											
		FUEL PUMP RELAY	FUEL INJECTOR	HO2S HEATER	IAC VALVE	IGNITION COIL WITH IGNITER	EGR VALVE (IF EQUIPPED)	EVAP CANISTER PURGE VALVE	A/C COMPRESSOR CLUTCH	RADIATOR FAN RELAY	MIL	MAIN RELAY	TRANSMISSION CONTROL MODULE
SIGNAL FROM SENSOR, SWITCH AND CONTROL MODULE	DIAGNOSIS SWITCH (VEHICLE WITHOUT EGR VALVE)												
	FUEL LEVEL SENSOR (VEHICLE WITH EGR VALVE)	For detecting fuel level											
	BAROMETRIC PRESSURE SENSOR												
	STOP LAMP SWITCH												
	START SWITCH												
	IGNITION SWITCH												
	LIGHTING SWITCH												
	REAR DEFOGGER SWITCH (IF EQUIPPED)												
	BLOWER SWITCH												
	A/C SWITCH												
	A/C EVAP THERMISTOR												
	VSS												
	HEATED OXYGEN SENSOR-1												
	HEATED OXYGEN SENSOR-2 (VEHICLE WITH EGR VALVE)	For detecting deterioration of three way catalytic convertor											
	IAT SENSOR												
	ECT SENSOR												
	TP SENSOR												
	MAP SENSOR												
	CMP SENSOR												
	CKP SENSOR												
	TEST SWITCH TERMINAL (VEHICLE WITHOUT EGR VALVE)												
	KNOCK SENSOR												

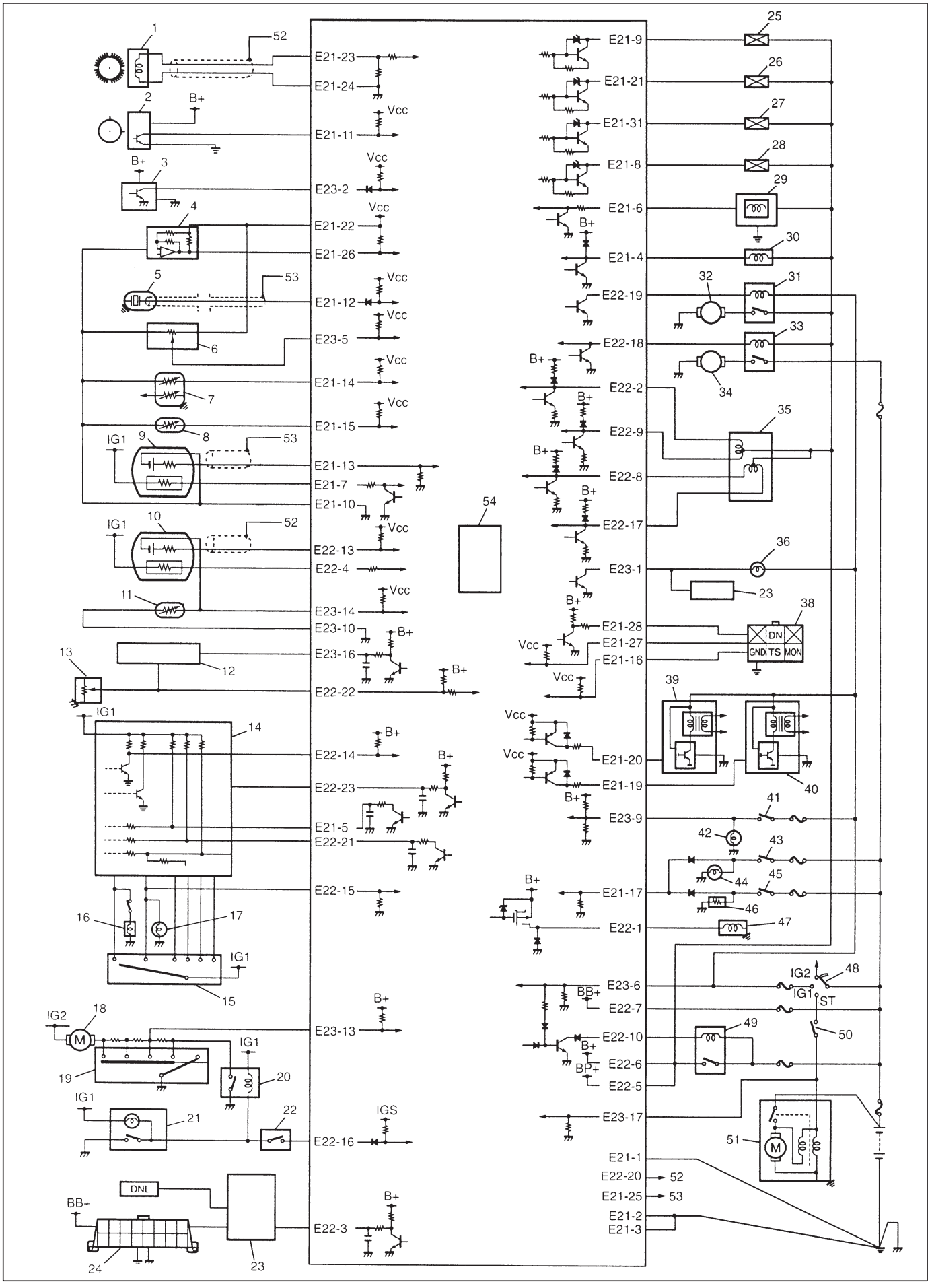
E21-23
E21-24
E21-11
E23-2
E21-22
E21-26
E21-12
E23-5
E21-14
E21-15
E21-13
E21-7
E21-10
E22-13
E22-4
E23-14
E23-10
E23-16
E22-22
E22-14
E22-23
E21-5
E22-21
E22-15
E23-13
E22-16
E22-3
E21-9
E21-21
E21-31
E21-8
E21-6
E21-4
E22-19
E22-18
E22-2
E22-9
E22-8
E22-17
E23-1
E21-28
E21-27
E21-16
E21-20
E21-19
E23-9
E21-17
E22-1
E23-6
E22-7
E22-10
E22-6
E22-5
E23-17
E21-1
E22-20
E21-25
E21-2
E21-3
Vcc
B+
IG1
IG2
IGS
BB+
BP+
DNL
DN
GND
TS
MON
ST

1. CKP sensor
2. CMP sensor
3. VSS
4. MAP sensor
5. Knock sensor
6. TP sensor
7. ECT sensor
8. IAT sensor
9. Heated oxygen sensor-1
10. Heated oxygen sensor-2
11. A/C AVAP TEMP sensor
12. Speedometer
13. Fuel level sensor
14. TCM
15. Transmission range switch
16. Shift lock solenoid
17. Backup lamp
18. Heater fan motor
19. Heater fan switch
20. Heater fan relay
21. A/C switch
22. A/C pressure switch
23. ICM
24. Data link connector
25. Injector No.1
26. Injector No.2
27. Injector No.3
28. Injector No.4
29. IAC valve
30. EVAP canister purge valve
31. Fuel pump relay
32. Fuel pump
33. Radiator fan relay
34. Radiator fan motor
35. EGR valve
36. Malfunction indicator lamp
37. Blank
38. Monitor connector
39. Ignition coil assembly (for No.1 and No.4 spark plugs)
40. Ignition coil assembly (for No.2 and No.3 spark plugs)
41. Stop lamp switch
42. Stop lamp
43. Lighting switch
44. Position lamp
45. Rear defogger switch
46. Rear defogger
47. A/C compressor clutch
48. Ignition switch
49. Main relay
50. Transmission range switch
51. Starting motor
52. Shield wire
53. Shield wire
54. Barometric pressure sensor

CON-NECTOR	TERMINAL	WIRE COLOR	CIRCUIT
E21	1	B	Ground for ECM
	2	B/Y	Ground for drive circuit
	3	B/Y	Ground for drive circuit
	4	R/B	Canister purge valve
	5	Gr	Coolant temp. signal output
	6	G/Y	IAC valve
	7	Y	Heater of HO2S-1
	8	Bl/Or	No.4 fuel injector
	9	Bl/W	No.1 fuel injector
	10	Br/W	Ground for sensor circuit
	11	Or	CMP sensor
	12	W	Knock sensor
	13	R	Heated oxygen sensor-1
	14	Y/G	Coolant temp. sensor
	15	Lg	Intake air temp. sensor
	16	G/Or	Test switch terminal
	17	R/W	Electric load (+)
	18	——	———
	19	R/Bl	IG coil assembly for No.2 and 3 spark plugs
	20	Y/Bl	IG coil assembly for No.1 and 4 spark plugs
	21	Bl/Y	No.2 fuel injector
	22	W/G	Power supply for sensor
	23	P	CKP sensor (+)
	24	Bl	CKP sensor (–)
	25	——	Ground for sensor shield wire
	26	Lg/R	MAP sensor
	27	Gr/R	Diagnosis switch terminal
	28	P/Bl	Duty output terminal
	29	——	———
	30	——	———
	31	Bl/R	No.3 fuel injector
E22	1	B/Y	A/C compressor clutch
	2	G/Y	EGR valve (stepper motor coil 1)
	3	W/B or W/R	Data link connector
	4	Bl/R	Heater of HO2S-2
	5	B/R	Power source
	6	B/R	Power source
	7	W/Bl	Backup power source
	8	G/R	EGR valve (stepper motor coil 3)
	9	G/B	EGR valve (stepper motor coil 2)
	10	Bl/B	Ground for main relay
	11	——	———
E22	12	——	———
	13	Bl	Heated oxygen sensor-2
	14	W	“D”, “2”, “L”-range ID-UP signal
	15	R	“R”-range signal
	16	Lg/R	A/C SW signal
	17	G/Or	EGR valve (stepper motor coil 4)
	18	Bl	Radiator fan relay
	19	G	Fuel pump relay
	20	——	Ground for sensor shield wire
	21	Y/B	Throttle opening signal output for A/T
	22	Y/R	Fuel level gauge
	23	Bl/W	TCM serial data line
	24	——	———
E23	1	V/W	Malfunction indicator lamp
	2	V	Vehicle speed sensor
	3	——	———
	4	——	———
	5	Gr	Throttle position (TP) sensor
	6	B/W	Ignition switch signal
	7	——	———
	8	——	———
	9	G/W	Stop lamp switch (Brake pedal switch)
	10	Br/W	GND for sensor
	11	——	———
	12	——	———
	13	P/Bl	Heater blower switch signal
	14	G/R	A/C evaporator temp. sensor
	15	——	———
	16	Br/Y	Tachometer signal
	17	B/Y	Engine start signal

Wire color

B	:	Black	Or	:	Orange
B/R	:	Black/Red	P	:	Pink
B/W	:	Black/White	P/Bl	:	Pink/Blue
B/Y	:	Black/Yellow	P/G	:	Pink/Green
Bl	:	Blue	V	:	Violet
Bl/Or	:	Blue/Orange	V/W	:	Violet/White
Bl/B	:	Blue/Black	W	:	White
Bl/R	:	Blue/Red	W/B	:	White/Black
Bl/W	:	Blue/White	W/Bl	:	White/Blue
Bl/Y	:	Blue/Yellow	W/G	:	White/Green
Br/W	:	Brown/White	W/R	:	White/Red
Br/Y	:	Brown/Yellow	R	:	Red
G	:	Green	R/B	:	Red/Black
G/B	:	Green/Black	R/Bl	:	Red/Blue
G/R	:	Green/Red	R/W	:	Red/White
G/W	:	Green/White	Y	:	Yellow
G/Y	:	Green/Yellow	Y/B	:	Yellow/Black
Gr	:	Gray	Y/Bl	:	Yellow/Blue
Gr/R	:	Gray/Red	Y/G	:	Yellow/Green
Lg	:	Lightgreen	Y/R	:	Yellow/Red
Lg/R	:	Lightgreen/Red			

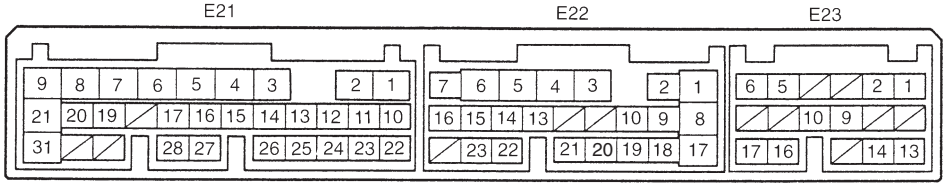

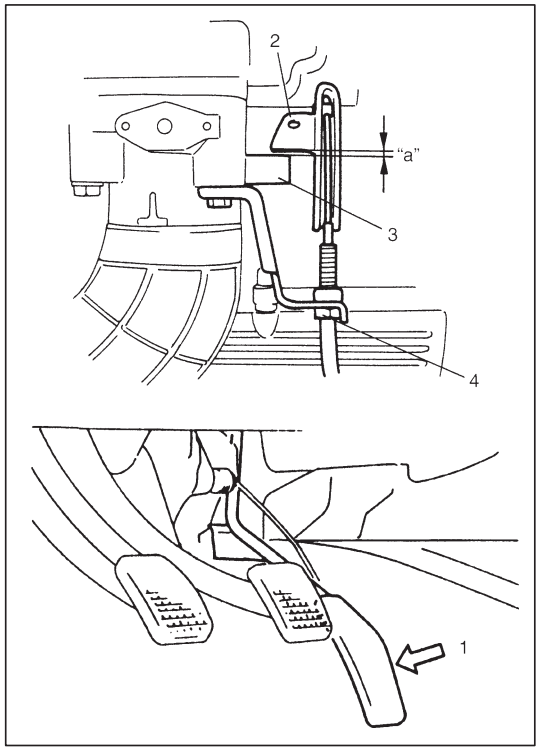

ON-VEHICLE SERVICE

ACCELERATOR CABLE ADJUSTMENT

1) With accelerator pedal depressed fully (1), check clearance between throttle lever (2) and lever stopper (3) (throttle body) which should be within following specification.

   Clearance "a" : 0.5 – 2.0 mm (0.02 – 0.07 in.)
   (With pedal
   depressed fully)

   If measured value is out of specification, adjust it to specification with cable adjusting nut (4).

IDLE SPEED/IDLE AIR CONTROL (IAC) DUTY INSPECTION

Before idle speed/IAC duty check, make sure of the following.

- Lead wires and hoses of Electronic Fuel Injection and engine emission control systems are connected securely.
- Accelerator cable has some play, that is, it is not tight.
- Valve lash is checked and adjusted according to maintenance schedule.
- Ignition timing is within specification.
- All accessories (wipers, heater, lights, A/C, etc.) are out of service.
- Air cleaner has been properly installed and is in good condition.
- No abnormal air inhaling from air intake system.

After above items are all confirmed, check idle speed and IAC duty as follows.

NOTE:
Before starting engine, place transmission gear shift lever in "Neutral" (shift selector lever to "P" range for A/T vehicle), and set parking brake and block drive wheels.

When using SUZUKI scan tool:

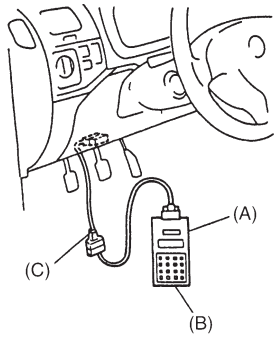

When using duty meter (Vehicle without EGR valve):

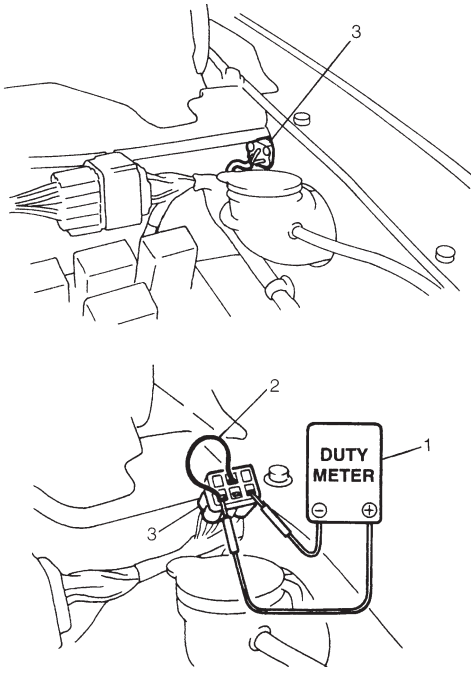

1) Connect SUZUKI scan tool to DLC with ignition switch OFF, if it is available.
2) Warm up engine to normal operating temperature.
3) Check engine idle speed and “IAC duty” as follows:

When using SUZUKI scan tool:
(a) Select “Data List” mode on scan tool to check “IAC duty”.

(A): 09931-76011 (SUZUKI scan tool)
(B): Mass storage cartridge
(C): 09931-76030 (16/14 pin DLC cable)

When using duty meter (1) (Vehicle without EGR valve):

NOTE:
IAC duty can be checked using monitor connector only for vehicle not equipped with EGR valve.

(a) Disconnect scan tool from DLC if connected.
(b) Set tachometer.
(c) Pull monitor connector (3) out of fender apron panel hole.
(d) Using service wire (2), ground “Diag. switch terminal” in monitor connector (3) and connect duty meter between “Duty output terminal” and “Ground terminal” of monitor connector (3).

If duty and/or idle speed is out of specifications, inspect idle air control system referring to Diagnostic Flow Chart B-4 IDLE AIR CONTROL SYSTEM CHECK in Section 6.

ENGINE IDLE SPEED AND IAC DUTY		
	A/C OFF	A/C ON
M/T vehicle	700 ± 50 r/min (rpm) 3 – 30 or *3 – 40%	850 ± 50 r/min (rpm)
A/T vehicle at P/N range	750 ± 50 r/min (rpm) 3 – 30 or *3 – 40%	850 ± 50 r/min (rpm)

NOTE:
- **Above duty values are ON duty (low voltage rate) meter indications.**
- **Duty values with (*) are applicable to vehicle used at high altitude (higher than 2,000 m or 6,560 ft).**

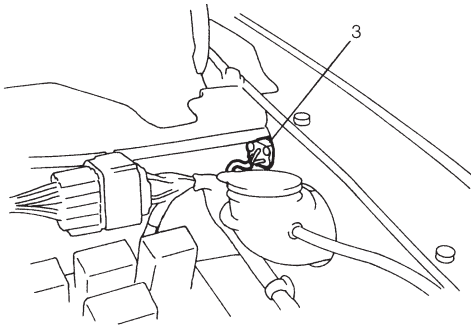

4) Remove service wire from monitor connector (3).
5) Insert monitor connector (3) in fender apron panel hole.
6) Check that 850 ± 50 r/min. idle speed is obtained with lighting switch ON and heater blower switch in 2 – 4 position.
If not, check “Electric load (+)” circuit and “Heater blower switch signal” circuit. Refer to “ELECTRONIC CONTROL SYSTEM” in this section.
7) Check that specified engine idle speed is obtained with A/C ON if vehicle is equipped with A/C.
If not, check A/C ON signal circuit and idle air control system.

AIR INTAKE SYSTEM

THROTTLE BODY

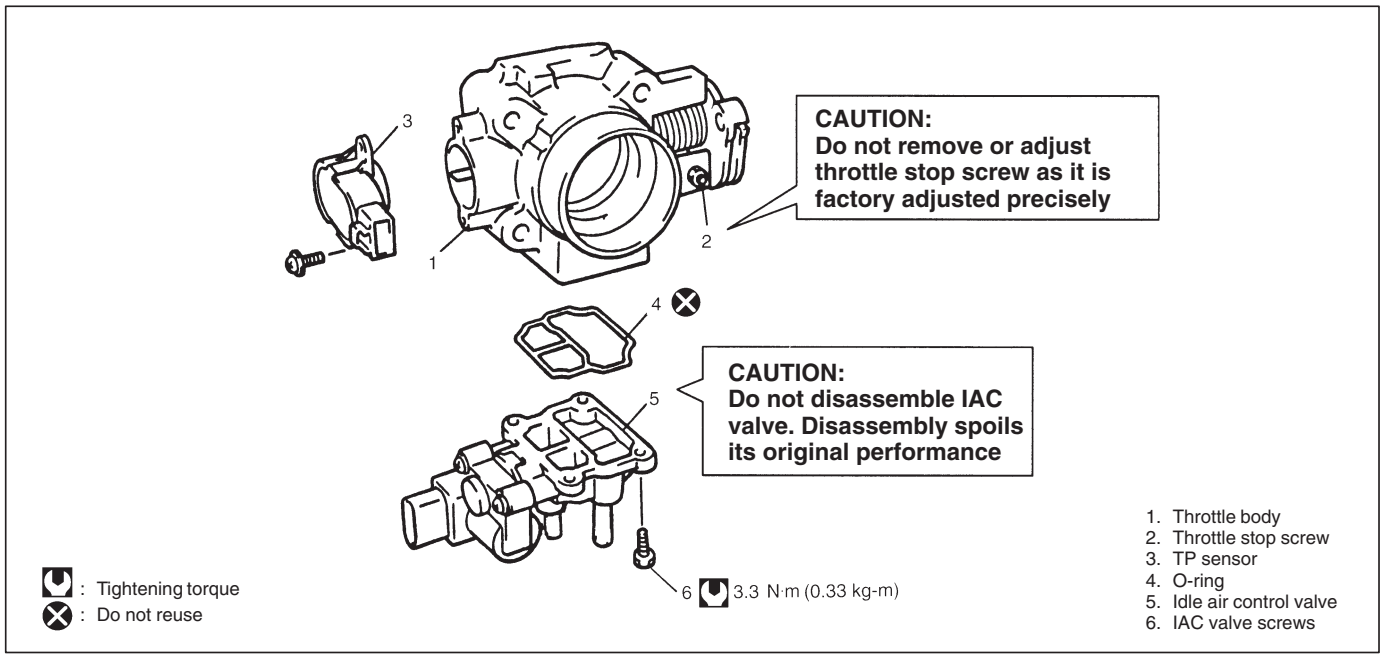

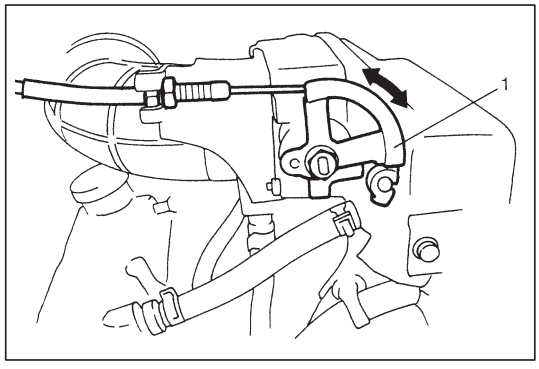

On-Vehicle Inspection

- Check that throttle valve lever (1) moves smoothly.

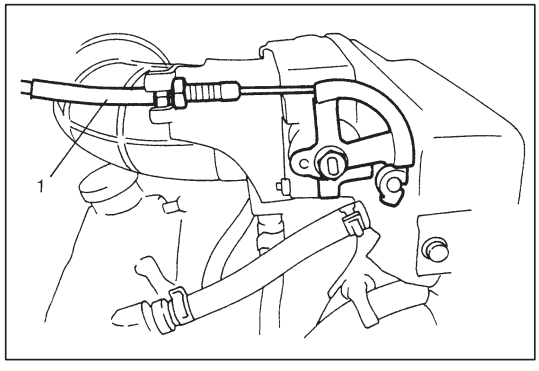

Removal

1) Disconnect negative cable at battery.
2) Drain cooling system.
3) Disconnect accelerator cable (1) from throttle body.

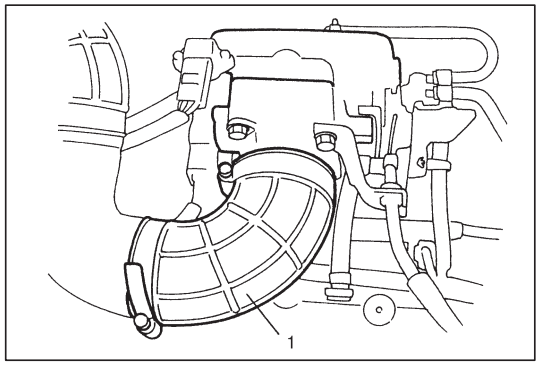

4) Disconnect air cleaner outlet hose (1) from throttle body.

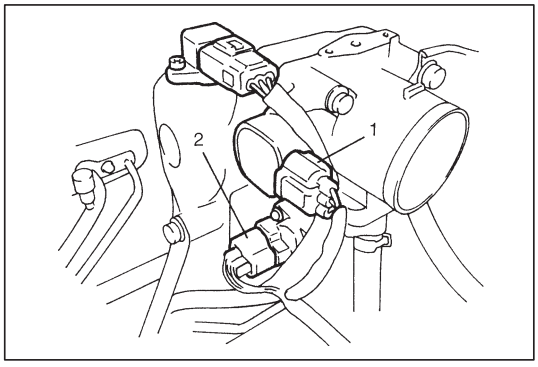

5) Disconnect electric coupler from TP sensor (1) and IAC valve (2).
6) Remove throttle body from intake manifold.
7) Disconnect engine coolant hoses from throttle body.

Disassembly

NOTE:

While disassembling and assembling throttle body, use special care not to deform levers on throttle valve shaft or cause damage to any other parts.

1) Remove TP sensor and IAC valve from throttle body.

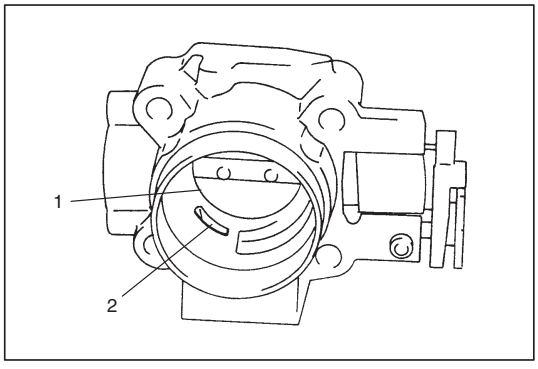

Cleaning

Clean throttle body bore (1) and idle air passage (2) by blowing compressed air.

NOTE:

- **TP sensor, idle air control valve or other components containing rubber must not be placed in a solvent or cleaner bath. A chemical reaction will cause these parts to swell, harden or get distorted.**

Reassembly

1) Install IAC valve to throttle body referring to “IAC valve Installation” section.
2) Install TP sensor to throttle body referring to “TP sensor Installation” section.

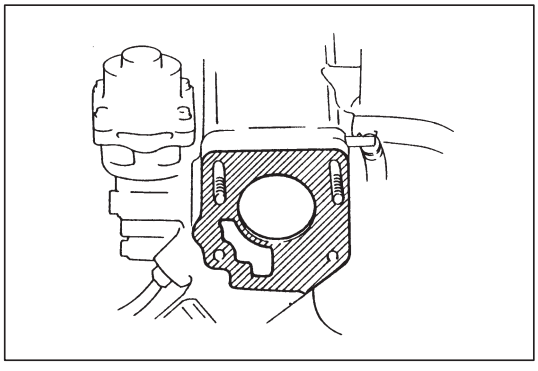

Installation

1) Clean mating surfaces and install throttle body gasket to intake manifold.
   Use new gasket.

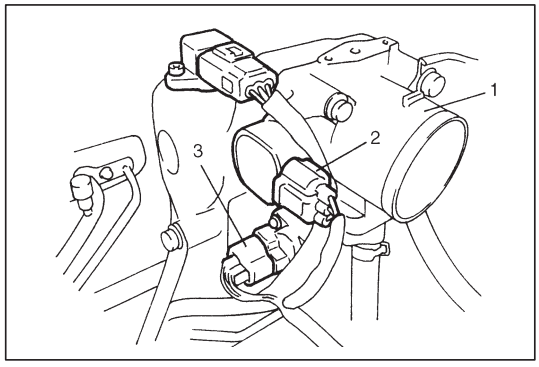

2) Connect engine coolant hoses.
3) Install throttle body (1) to intake manifold.
4) Connect coupler to TP sensor (2) and IAC valve (3) securely.

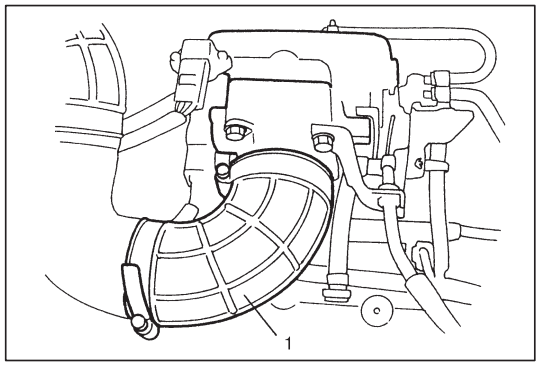

5) Install air cleaner outlet hose (1) and pipe.
6) Connect accelerator cable and adjust cable play to specification.
7) Refill cooling system.
8) Connect negative cable at battery.

IDLE AIR CONTROL VALVE (IAC VALVE)

Removal

1) Remove throttle body from intake manifold referring to “Throttle Body Removal” section.
2) Remove IAC valve from throttle body.

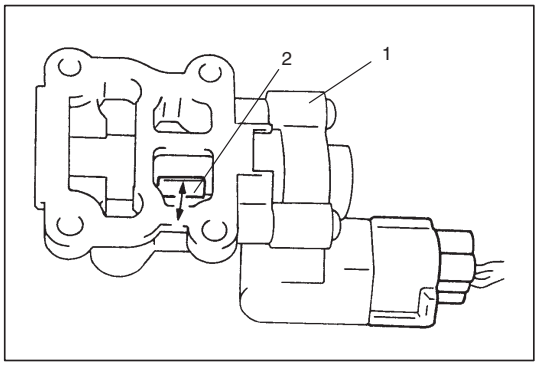

Inspection

1) Connect each connector to IAC valve (1), TP sensor and IAT sensor.
2) Check that rotary valve (2) of IAC valve opens and closes once and then stops in about 60 ms as soon as ignition switch is turned ON.

NOTE:

- **This check should be performed by two people, one person turns on ignition switch while the other checks valve operation.**
- **As valve operation is momentary, it may be overlooked. To prevent this, perform this operation check 3 times or more continuously.**
  If rotary valve of IAC valve does not operate at all, check wire harness for open and short. If wire harness is in good condition, replace IAC valve and recheck.

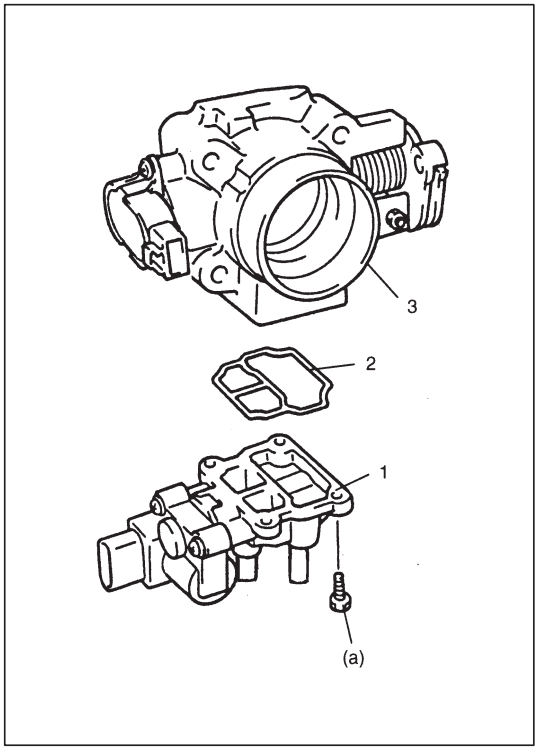

Installation

1) Install new O-ring (2) to IAC valve (1).
2) Install IAC valve (1) to throttle body (3).
   Tighten IAC valve screws to specified torque.

   Tightening Torque
   (a): 3.3 N·m (0.33 kg-m, 2.5 lb-ft)

3) Install throttle body to intake manifold referring to “Throttle Body Installation” section.

FUEL DELIVERY SYSTEM

FUEL PRESSURE INSPECTION

WARNING:
Be sure to perform work in a well-ventilated area and away from any open flames, or there is a risk of a fire breaking out.

1) Relieve fuel pressure in fuel feed line referring to “Fuel Pressure Relief Procedure” in Section 6.

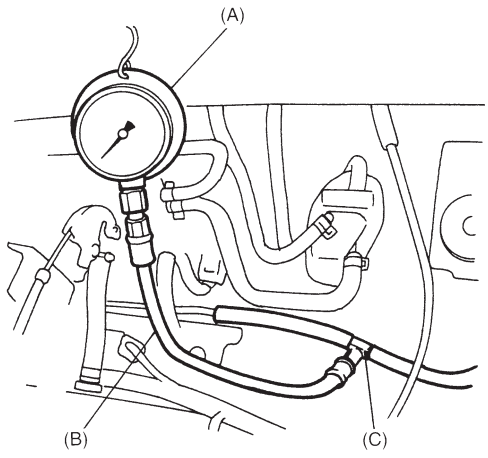

2) Disconnect fuel feed hose from fuel delivery pipe.

CAUTION:
A small amount of fuel may be released when fuel hose is disconnected. Place container under the joint with a shop cloth so that released fuel is caught in container or absorbed in cloth. Place that cloth in an approved container.

3) Connect special tools and hose between fuel delivery pipe and fuel feed hose as shown in figure, and clamp hoses securely to ensure no leaks occur during checking.

Special Tool
(A): 09912-58441
(B): 09912-58431
(C): 09912-58490

4) Check that battery voltage is above 11 V.

CONDITION	FUEL PRESSURE
With fuel pump operating and engine stopped	270 – 310 kPa 2.7 – 3.1 kg/cm^2 38.4 – 44.0 psi
At specified idle speed	
With 1 min. after engine (fuel pump) stop (Pressure reduces as time passes)	over 250 kPa 2.5 kg/cm^2 35.6 psi

5) Turn ignition switch ON to operate fuel pump and after 2 seconds turn it OFF. Repeat this 3 or 4 times and then check fuel pressure.
6) Start engine and warm it up to normal operating temperature.
7) Measure fuel pressure at idling.

If measured pressure doesn’t satisfy specification, refer to “Diagnostic Flow Table B-3” in “Engine Diagnosis” section and check each possibly defective part. Replace if found defective.

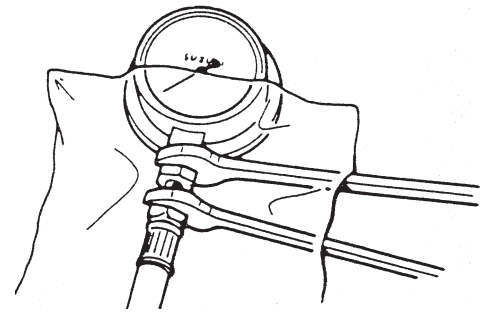

8) After checking fuel pressure, remove fuel pressure gauge.

CAUTION:
As fuel feed line is still under high fuel pressure, make sure to release fuel pressure according to following procedures.
- **Place fuel container under joint.**
- **Cover joint with rag and loosen joint nut slowly to release fuel pressure gradually.**

9) Remove special tools from fuel delivery pipe.
10) Connect fuel feed hose to fuel delivery pipe and clamp it securely.
11) With engine “OFF” and ignition switch “ON”, check for fuel leaks.

FUEL PUMP WITH PRESSURE REGULATOR

On-Vehicle Inspection

CAUTION:
When fuel filler cap is removed in any procedure, work must be done in a well-ventilated area, keep away from any open flames and without smoking.

NOTE:
The fuel pressure regulator is the one body with the fuel pump assembly so individual inspection of it is impossible.

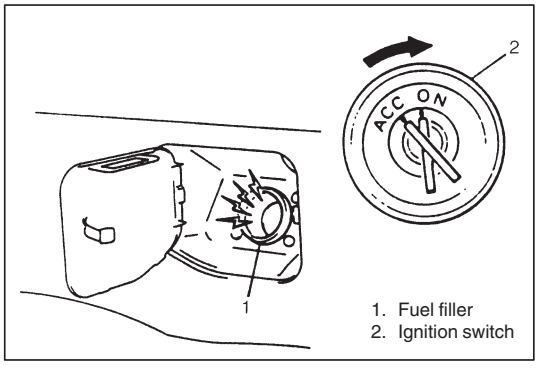

1) Remove filler cap and turn ON ignition switch. Then fuel pump operating sound should be heard from fuel filler for about 2 seconds and stop. Be sure to reinstall fuel filler cap after checking.

   If above check result is not satisfactory, advance to “Diagnostic Flow Chart B-2”.

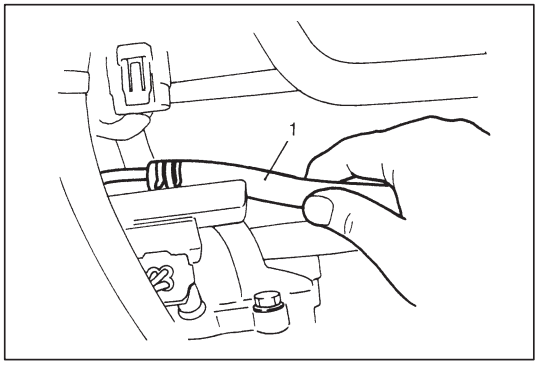

2) Turn OFF ignition switch and leave over 10 minutes as it is.
3) Fuel pressure should be felt at fuel feed hose (1) for 2 seconds after ignition switch ON.

   If fuel pressure is not felt, advance to “Diagnostic Flow Chart B-3”.

Removal

1) Remove fuel tank from body according to procedure described in Section 6C and remove fuel pump from fuel tank.

Inspection

Check fuel pump filter for evidence of dirt and contamination. If present, clean and check for presence of dirt in fuel tank.

Installation

1) Install fuel pump to its bracket.
2) Install fuel pump to fuel tank and then install fuel tank to body according to procedure described in Section 6C.

FUEL INJECTOR

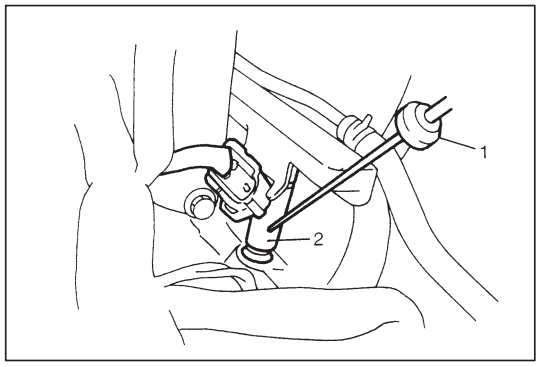

On-Vehicle Inspection

1) Using sound scope (1) or such, check operating sound of injector (2) when engine is running or cranking.
   Cycle of operating sound should vary according to engine speed.
   If no sound or an unusual sound is heard, check injector circuit (wire or coupler) or injector (2).

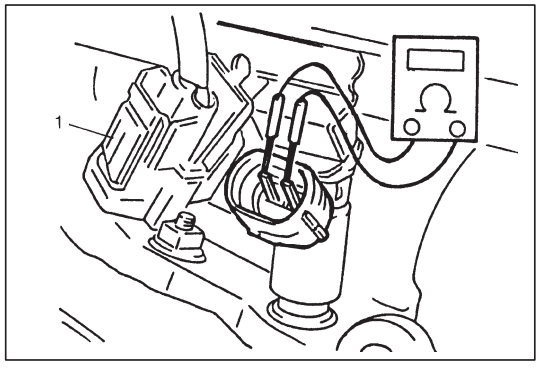

2) Disconnect coupler (1) from injector, connect ohmmeter between terminals of injector and check resistance.

   Resistance of injector: 12.0 – 13.0 Ω at 20°C, 68°F

   If resistance is out of specification, replace.
3) Connect coupler (1) to injector securely.

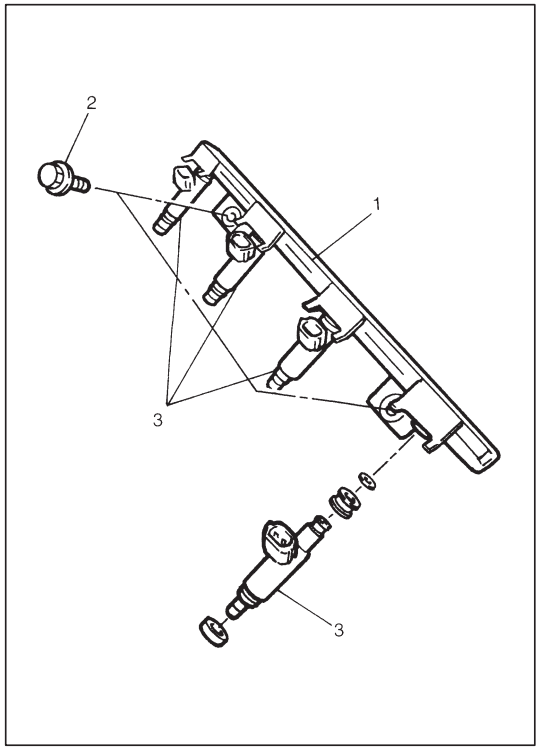

Removal

1) Relieve fuel pressure according to procedure described in Section 6.
2) Disconnect battery negative cable at battery.
3) Disconnect fuel injector couplers.
4) Disconnect fuel feed hose from fuel delivery pipe (1).
5) Remove fuel delivery pipe bolts (2).
6) Remove fuel injector(s) (3).

> **CAUTION:**
> **A small amount of fuel may come out after removal of fuel injectors, cover them with shop cloth.**

Inspection

WARNING:
As fuel is injected in this inspection, perform in a well ventilated area and away from open flames.
Use special care to prevent sparking when connecting and disconnecting test lead to and from battery.

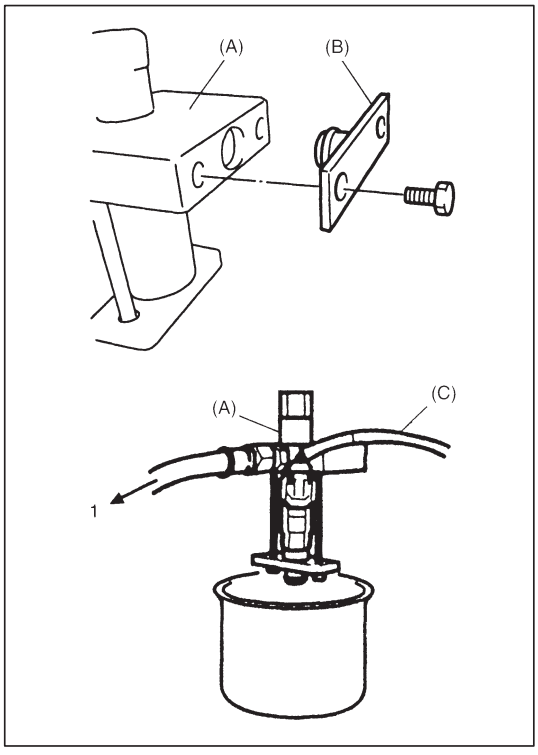

1) Install injector to special tool (injector checking tool).

   Special Tool
   (A): 09912-58421
   (B): 09912-57610

2) Connect special tools (hose and attachment) to fuel feed pipe (1) of vehicle.
3) Connect special tool (test lead) to injector.

   Special Tool
   (C): 09930-88530

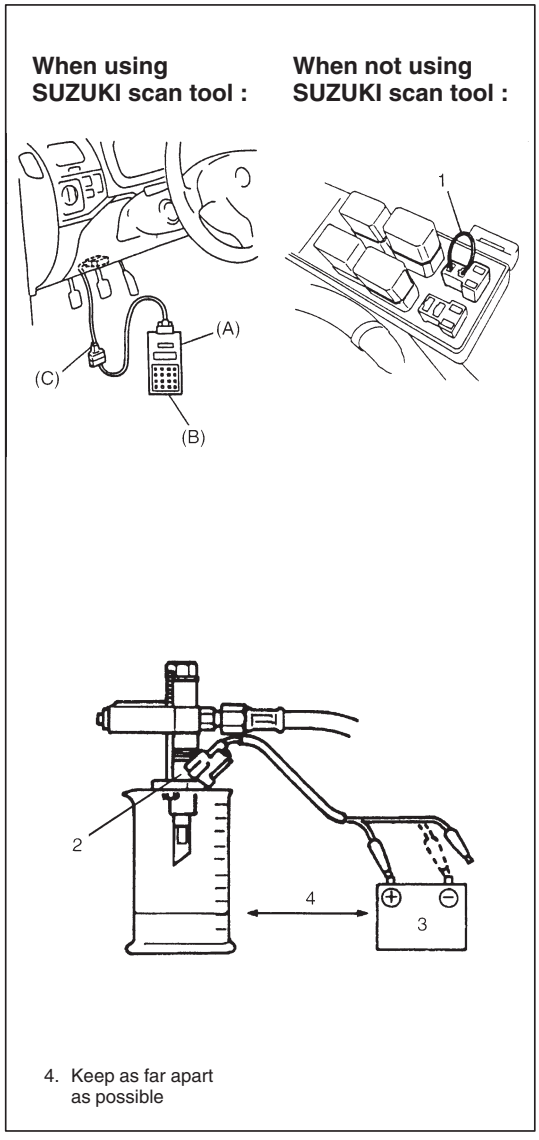

4) Install suitable vinyl tube onto injector nozzle to prevent fuel from splashing out when injecting.
5) Put graduated cylinder under injector as shown.
6) Operate fuel pump and apply fuel pressure to injector as follows:
   When using SUZUKI scan tool :
   (1) Connect SUZUKI scan tool to DLC with ignition switch OFF.
   (2) Turn ignition switch ON, clear DTC and select “MISC TEST” mode on SUZUKI scan tool.
   (3) Turn fuel pump ON by using SUZUKI scan tool.

   (A): 09931-76011 (SUZUKI scan tool)
   (B): Mass storage cartridge
   (C): 09931-76030 (16/14 pin DLC cable)

   When not using SUZUKI scan tool :
   (1) Remove fuel pump relay from connector.
   (2) Connect two terminals of relay connector using service wire (1) as shown in figure.

   CAUTION:
   Check to make sure that connection is made between correct terminals. Wrong connection can cause damage to ECM, wire harness, etc.

   (3) Turn ignition switch ON.
7) Apply battery voltage (3) to injector (2) for 15 seconds and measure injected fuel volume with graduated cylinder.
   Test each injector two or three times.
   If not within specification, replace injector.

   Injected fuel volume:
   40 – 50 cc/15 sec. (1.35/1.41 – 1.69/1.76 US/Imp. oz/15 sec.)

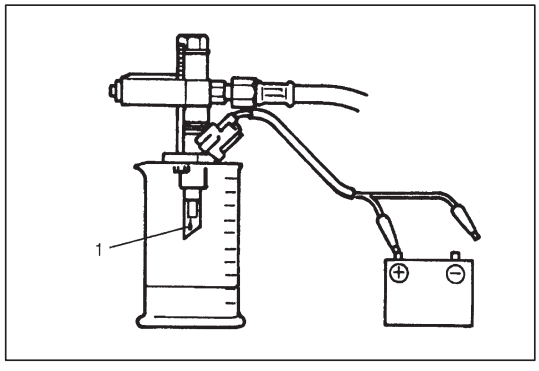

8) Check fuel leakage from injector nozzle. Do not operate injector for this check (but fuel pump should be at work).
   If fuel leaks (1) more than following specifications, replace.

   Fuel leakage (1): Less than 1 drop/min.

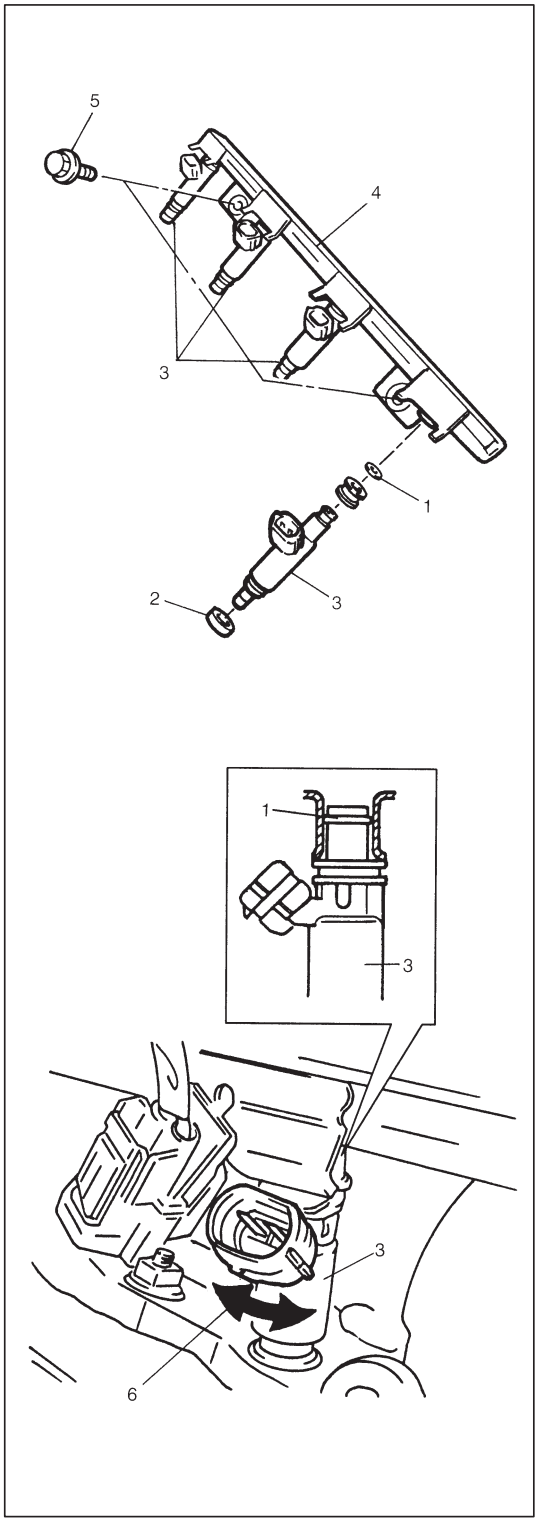

Installation

For installation, reverse removal procedure and note following precautions.

- Replace injector O-ring (1) with new one using care not to damage it.
- Check if cushion (2) is scored or damaged. If it is, replace with new one.
- Apply thin coat of fuel to O-rings (1) and then install injectors (3) into delivery pipe (4) and intake manifold.
  Make sure that injectors (3) rotate smoothly (6). If not, probable cause is incorrect installation of O-ring (1). Replace O-ring (1) with new one.
- Tighten delivery pipe bolts (5) and make sure that injectors (3) rotate smoothly (6).
- After installation, with engine “OFF” and ignition switch “ON”, check for fuel leaks around fuel line connection.

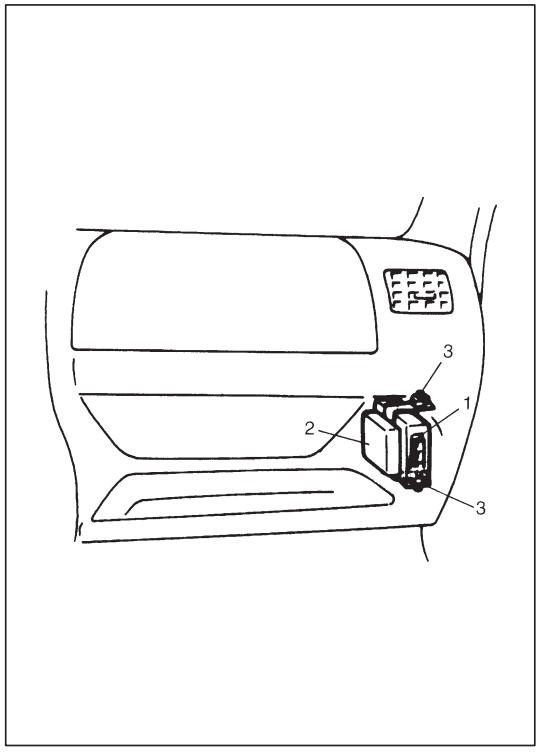

ELECTRONIC CONTROL SYSTEM

ENGINE CONTROL MODULE (ECM)

CAUTION:
As ECM consists of precision parts, be careful not to expose it to excessive shock.

Removal

1) Disconnect battery negative cable at battery.
2) Disable air bag system, refer to “DISABLING THE AIR BAG SYSTEM” in Section 9J if equipped.
3) Remove glove box.
4) Disconnect ECM (1) and TCM (2) (if equipped) couplers.
5) Loosen 2 nuts (3) and remove ECM and TCM (if equipped).

Installation

1) Reverse removal procedure noting the following:

- Connect couplers to ECM and TCM (if equipped) securely.

MANIFOLD ABSOLUTE PRESSURE SENSOR (MAP SENSOR)

Inspection

Check MAP sensor referring to “MAP Sensor Individual Check” in DTC P0105 Flow Chart. If malfunction is found, replace.

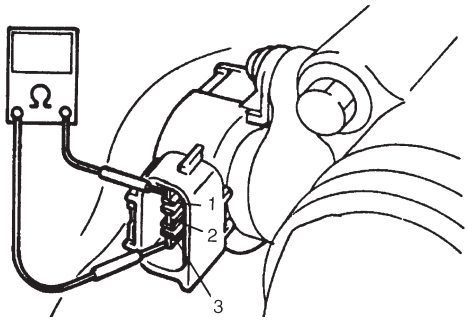

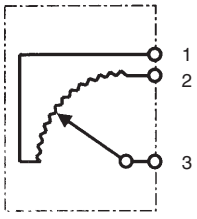

1. Ground terminal
2. Reference voltage terminal
3. Output voltage terminal

THROTTLE POSITION SENSOR (TP SENSOR)

Inspection

1) Disconnect negative cable at battery and coupler from TP sensor.
2) Using ohmmeter, check resistance between terminals under each condition given in table below.

TERMINALS	RESISTANCE
Between 1 and 2 terminals	2.5 – 6.0 kΩ
Between 1 and 3 terminals	100 Ω – 20 kΩ, varying according to throttle valve opening.
NOTE: **There should be more than 2 kΩ resistance difference between when throttle valve is at idle position and when it is fully open.**	

If check result is not satisfactory, replace TP sensor.

3) Connect TP sensor coupler securely.
4) Connect negative cable to battery.

Removal

1) Disconnect battery negative cable at battery.
2) Disconnect coupler from TP sensor.
3) Remove TP sensor from throttle body.

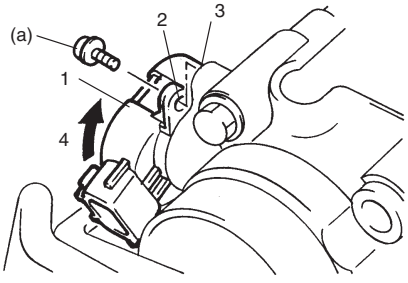

Installation

1) Install TP sensor (1) to throttle body.
   Fit TP sensor to throttle body in such way that its holes (3) are a little away from TP sensor screw holes (2) as shown in left figure and turn TP sensor clockwise so that those holes align (4).

   Tightening Torque
   (a): 2.0 N·m (0.20 kg-m, 1.5 lb-ft)

2) Connect coupler to TP sensor securely.
3) Connect battery negative cable to battery.

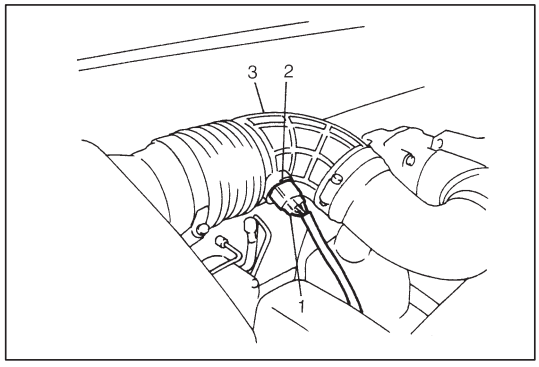

INTAKE AIR TEMPERATURE SENSOR (IAT SENSOR)

Removal

1) Disconnect battery negative cable at battery.
2) Disconnect coupler (1) from IAT sensor (2).
3) Remove IAT sensor (2) from air cleaner outlet hose (3).

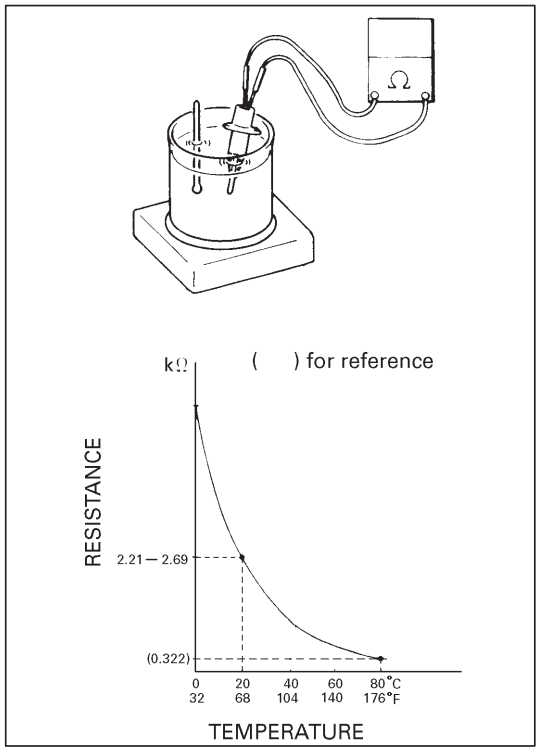

Inspection

Immerse temperature sensing part of IAT sensor in water (or ice) and measure resistance between sensor terminals while heating water gradually.

If measured resistance doesn't show such characteristic as shown in left figure, replace IAT sensor.

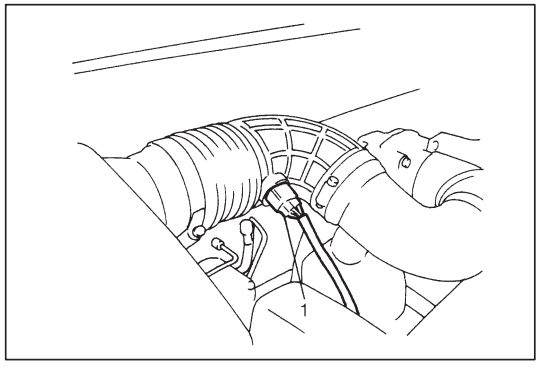

Installation

Reverse removal procedure noting the following.

- Clean mating surfaces of IAT sensor and air cleaner outlet hose.
- Connect IAT sensor coupler (1) securely.

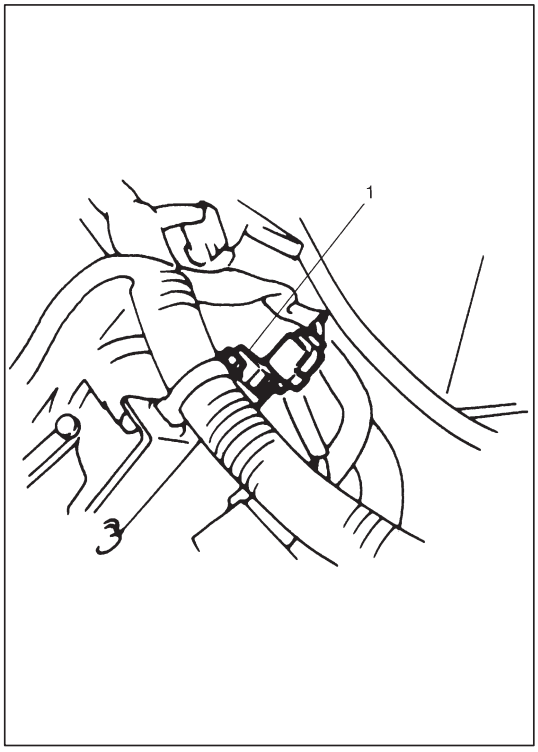

ENGINE COOLANT TEMPERATURE SENSOR (ECT SENSOR)

Removal

1) Disconnect battery negative cable at battery.
2) Drain coolant referring to Section 6B.

> **WARNING:**
> **To help avoid danger of being burned, do not remove radiator cap while engine and radiator are still hot. Scalding fluid and steam can be blown out under pressure if cap is taken off too soon.**

3) Disconnect coupler from ECT sensor.
4) Remove ECT sensor (1) from thermostat case.

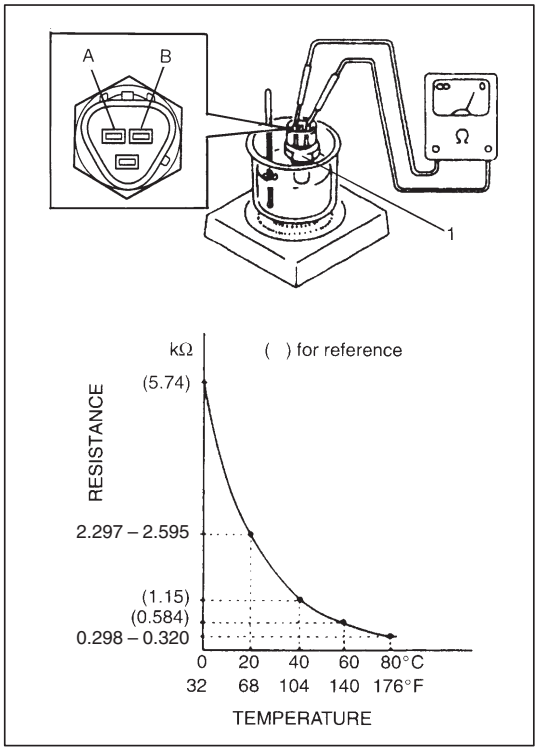

Inspection

Immerse temperature sensing part of ECT sensor (1) in water (or ice) and measure resistance between terminal “A” and “B” while heating water gradually.
If measured resistance doesn’t show such characteristic as shown in left figure, replace ECT sensor (1).

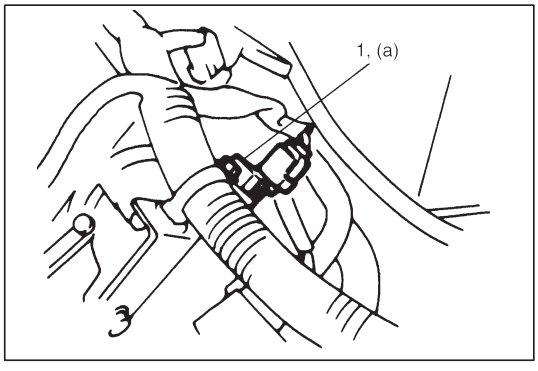

Installation

Reverse removal procedure noting the following:

- Clean mating surfaces of ECT sensor (1) and thermostat case.
- Check O-ring for damage and replace if necessary.
- Tighten ECT sensor (1) to specified torque.

Tightening Torque
(a): 15 N·m (1.5 kg-m, 11.5 lb-ft)

- Connect coupler to ECT sensor (1) securely.
- Refill coolant referring to Section 6B.

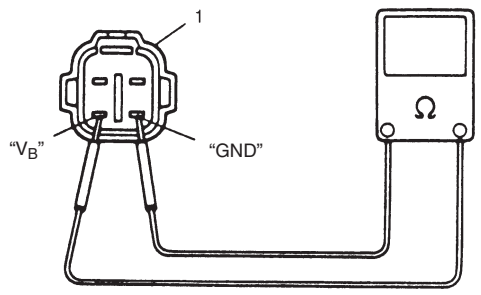

1. Viewed from terminal side

HEATED OXYGEN SENSOR (Sensor-1 and Sensor-2)

Oxygen Sensor Heater Inspection

1) Disconnect sensor coupler.
2) Using ohmmeter, measure resistance between terminals "V_B" and "GND" of sensor coupler.

   NOTE :
   Temperature of sensor affects resistance value largely. Make sure that sensor heater is at correct temperature.

   Resistance of oxygen sensor heater :
   11.7 – 15.6 Ω at 20°C, 68°F

   If found faulty, replace oxygen sensor.
3) Connect sensor coupler securely.

Removal

WARNING:
To avoid danger of being burned, do not touch exhaust system when system is hot. Oxygen sensor removal should be performed when system is cool.

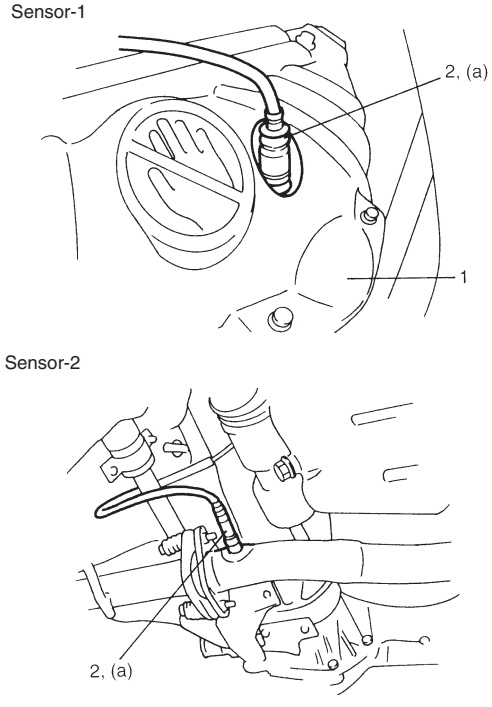

1) Disconnect negative cable at battery.
2) For sensor-1, remove exhaust manifold cover (1) and disconnect coupler of heated oxygen sensor and release its wire harness from clamps.
3) For sensor-2, hoist vehicle and disconnect coupler of heated oxygen sensor and release its wire harness from clamp.
4) Remove heated oxygen sensor (2) from exhaust manifold or exhaust pipe.

Installation

Reverse removal procedure noting the following.

- Tighten heated oxygen sensor (2) to specified torque.

  Tightening Torque for heated oxygen sensor
  (a): 45 N·m (4.5 kg-m, 32.5 lb-ft)

- Connect coupler of heated oxygen sensor (2) and clamp wire harness securely.
- After installing heated oxygen sensor (2), start engine and check that no exhaust gas leakage exists.

CAMSHAFT POSITION SENSOR

Inspection

Check camshaft position sensor referring to DTC P0340 (DTC No. 15) Diag. Flow Table in Section 6. If malfunction is found, replace.

Removal

1) Disconnect negative cable at battery.
2) Disconnect connector from camshaft position sensor.
3) Remove camshaft position sensor from sensor case (distributorless ignition case).

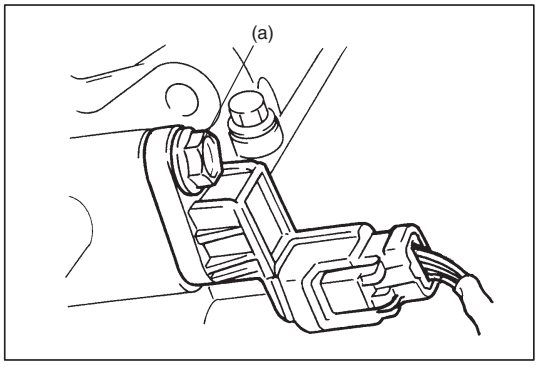

Installation

1) Check that O-ring is free from damage.
2) Check that camshaft position sensor and signal rotor tooth are free from any metal particles and damage.
3) Install camshaft position sensor to sensor case.

   Tightening Torque
   (a): 9 N·m (0.9 kg-m, 6.5 lb-ft)

4) Connect connector to it securely.
5) Connect negative cable to battery.

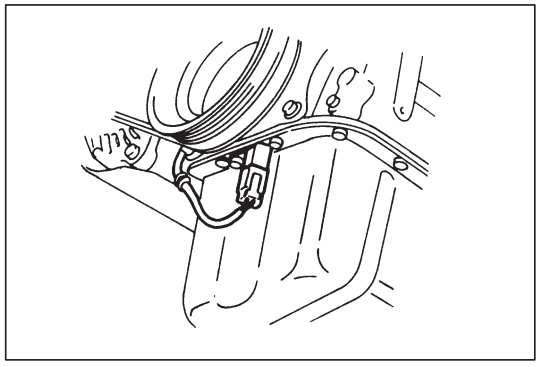

CRANKSHAFT POSITION SENSOR

Inspection

Check crankshaft position sensor referring to step 1 and 2 of DTC P0335 Flow Chart. If malfunction is found, replace.

Removal

1) Hoist vehicle.
2) Remove engine under cover on right side.
3) Disconnect connector from crankshaft position sensor.
4) Remove crankshaft position sensor from oil pan.

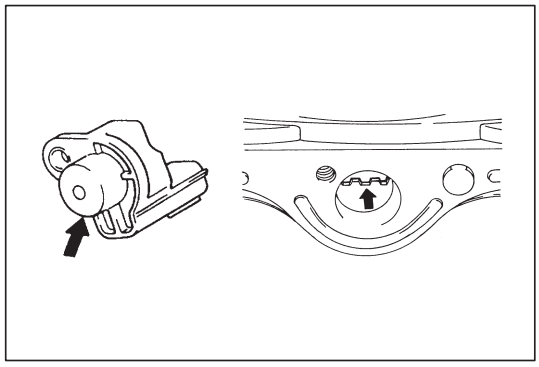

Installation

1) Check to make sure that crankshaft position sensor and pulley tooth is free from any metal particles and damage.
2) Install crankshaft position sensor to oil pan.
3) Connect connector to it securely.
4) Install engine under cover.

VEHICLE SPEED SENSOR (VSS)

Inspection

Check vehicle speed sensor referring to step 3 of DTC P0500 (DTC No. 16) Flow Chart. If malfunction is found, replace.

Removal/Installation

Refer to Section 7A.

FUEL LEVEL SENSOR (GAUGE)

Inspection

Refer to Section 8.

Removal/Installation

Refer to Section 6C.

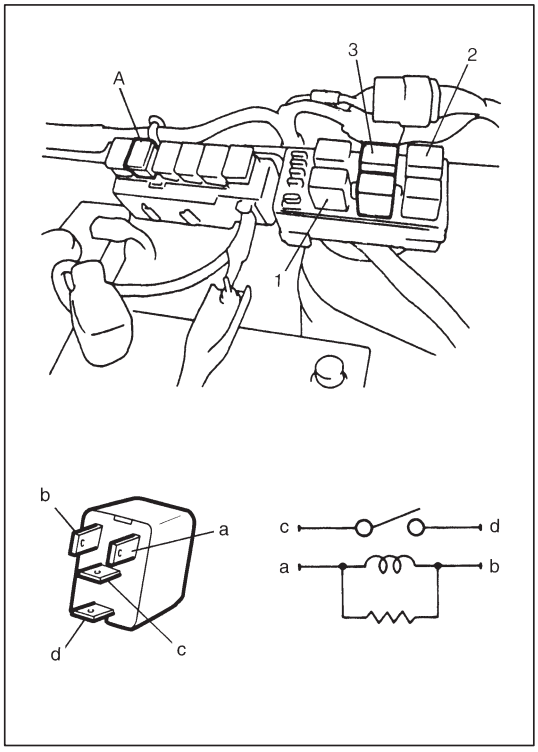

MAIN RELAY, FUEL PUMP RELAY AND RADIATOR FAN CONTROL RELAY

Inspection

1) Disconnect negative cable at battery.
2) Remove main relay (1), fuel pump relay (2) and radiator fan control relay (3) from vehicle.
3) Check that there is no continuity between terminal “c” and “d”. If there is continuity, replace relay.
4) Connect battery positive (+) terminal to terminal “b” of relay. Connect battery negative (–) terminal “a” of relay. Check continuity between terminal “c” and “d”. If there is no continuity when relay is connected to the battery, replace relay.

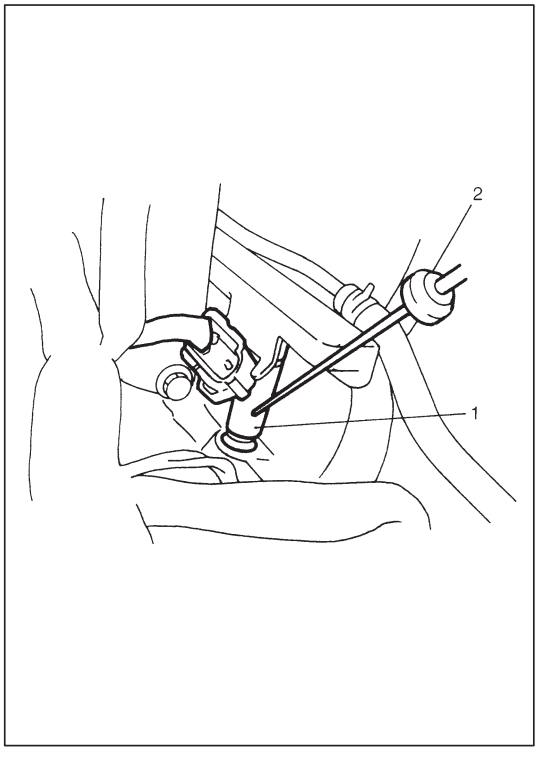

FUEL CUT OPERATION

Inspection

NOTE:

Before inspection, check to make sure that gear shift lever is in neutral position (with A/T model, selector lever in “P” range), A/C is OFF and that parking brake lever is pulled all the way up.

1) Warm up engine to normal operating temperature.
2) While listening to sound of injector (1) by using sound scope (2) or such, increase engine speed to higher than 3,000 r/min.
3) Check to make sure that sound to indicate operation of injector stops when throttle valve is closed instantly and it is heard again when engine speed is reduced to less than about 2,000 r/min.

RADIATOR FAN CONTROL SYSTEM

System Inspection

WARNING:
Keep hands, tools, and clothing away from engine cooling fan to help prevent personal injury. This fan is electric and can come on whether or not the engine is running. The fan can start automatically in response to the ECT sensor with the ignition switch in the "ON" position.

Check system for operation referring to Flow Chart B-8 in Section 6.
If radiator fan fails to operate properly, check relay, radiator fan and electrical circuit.

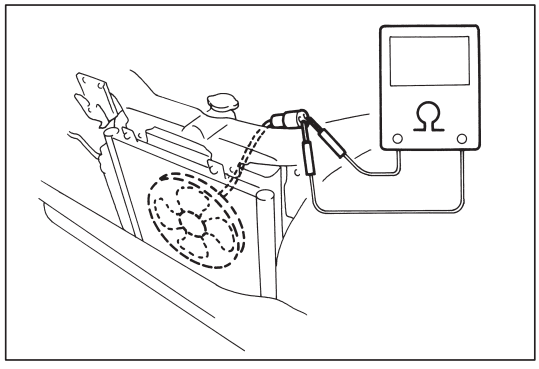

Radiator Fan

Inspection

1) Check continuity between each two terminals.
   If there is no continuity, replace radiator fan motor.

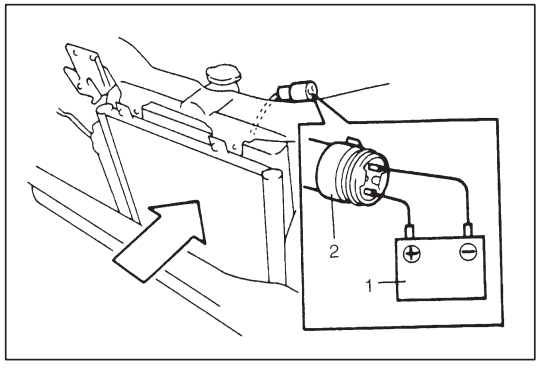

2) Connect battery (1) to radiator fan motor coupler (2) as shown in figure, then check that the radiator fan motor operates smoothly.
   If radiator fan motor does not operate smoothly, replace motor.

   Reference current data: Approx. 8.5 – 11.5 A at 12 V

OUTPUT SIGNALS OF THROTTLE VALVE OPENING AND ENGINE COOLANT TEMP. (Vehicle with A/T only)

Throttle Valve Opening Signal Inspection

Check throttle valve opening (throttle position) signal referring to step 1 of DTC P1700/DTC No.32 or 33 Flow Chart in Section 7B.
If check result is not satisfactory, check each wire harness, circuit connections and TP sensor.

Engine Coolant Temp. Signal Inspection

Check engine coolant temp. signal referring to step 1 of DTC P1705/DTC NO.51 Flow Chart in Section 7B.

If check result is not satisfactory, check each wire harness, circuit connection and ECT sensor.

EMISSION CONTROL SYSTEM

EGR SYSTEM

System Inspection (using SUZUKI scan tool)

1) Connect SUZUKI scan tool to DLC with ignition switch OFF.
2) Turn ignition switch ON and then select “DATA LIST” mode on scan tool.
3) Make sure that vehicle condition is as following.
   - Vehicle speed = 0 KPH
   - Engine coolant temp. ≧ 80°C
   - Engine speed ≦ 3000 rpm
4) Clear DTC by using “CLEAR INFO” mode.

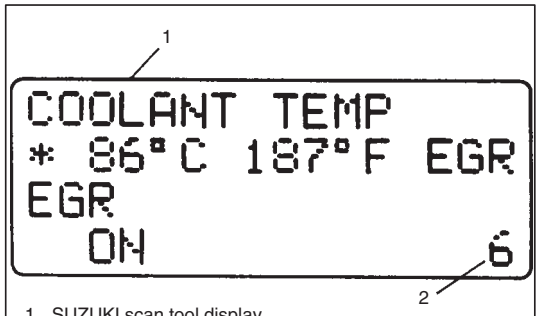

1. SUZUKI scan tool display
2. EGR valve opening (0: Close, 100: Full Open)

5) With engine idling (without depressing accelerator pedal), open EGR valve by using “STEP EGR” mode in “MISC TEST” menu. In this state, according as EGR valve opening increases engine idle speed drops. If not, possible cause is clogged EGR gas passage, stuck or faulty EGR valve, poor performance of ECT sensor or TP sensor or DTC and/or pending DTC is (are) stored in ECM memory.

Removal

1) Disconnect negative cable at battery.
2) Disconnect EGR valve coupler.
3) Remove EGR valve and gasket from intake manifold.

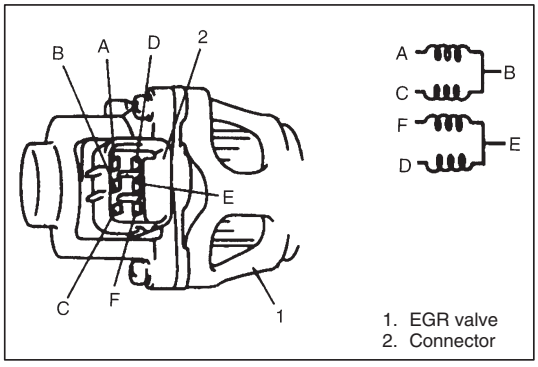

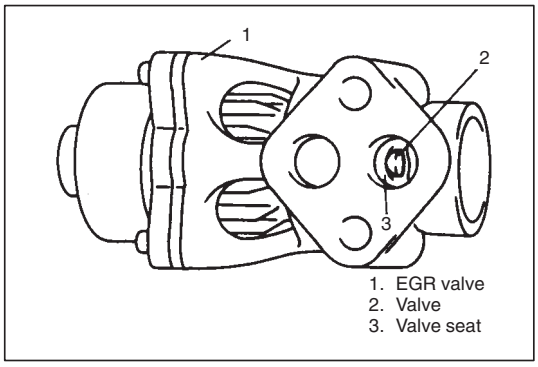

Inspection

1) Check resistance between following terminals of EGR valve in each pair.

Terminal	Standard resistance
A – B C – B F – E D – E	20 – 24 Ω

If found faulty, replace EGR valve assy.

2) Remove carbon from EGR valve gas passage.

NOTE:
Do not use any sharp–edged tool to remove carbon.
Be careful not to damage or bend EGR valve, valve seat and rod.

3) Inspect valve, valve seat and rod for fault, cracks, bend or other damage.
If found faulty, replace EGR valve assembly.

Installation

Reverse removal procedure noting following.

- Clean mating surface of valve and intake manifold.
- Use new gasket.

EVAPORATIVE EMISSION CONTROL SYSTEM

EVAP Canister Purge Inspection

NOTE:

Before inspection, check to make sure that gear shift lever is in neutral position (with A/T model, selector lever in "P" range) and that parking brake lever is pulled all the way up.

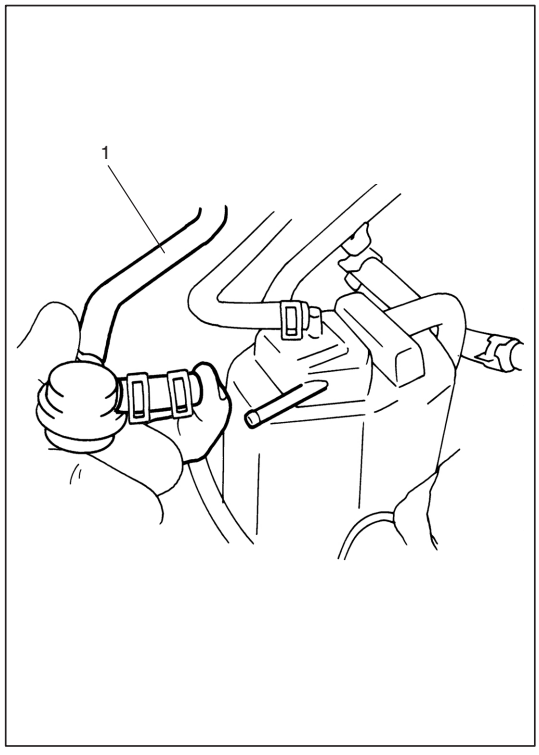

1) Disconnect purge hose (1) from EVAP canister.
2) Place finger against the end of disconnected hose and check that vacuum is not felt there when engine is cool and running at idle speed.
3) Connect purge hose to EVAP canister and warm up engine to normal operating temperature.
4) Disconnect purge hose from EVAP canister.
5) Also check that vacuum is felt when engine is running at idle speed.

   NOTE:

   The EVAP canister purge system does not perform purging (vacuum is not detected at the purge hose) unless the engine is sufficiently warmed up and the heated oxygen sensor is activated fully. Also, when the purge hose is disconnected in Step 4), the air is drawn into the purge line. As a result, ECM detects a change in the purge gas concentration and sometimes stops purging but this indicates nothing abnormal.

If check result is not satisfactory, check vacuum passage, hoses, EVAP canister purge valve, wire harness and ECM.

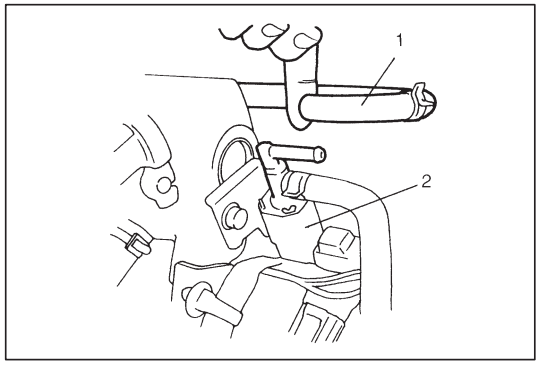

Vacuum Passage Inspection

Start engine and run it at idle speed. Disconnect vacuum hose (1) from EVAP canister purge valve (2). With finger placed against hose disconnected, check that vacuum is applied.

If it is not applied, clean vacuum passage by blowing compressed air.

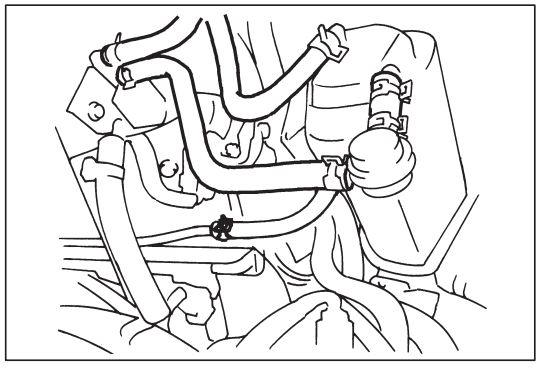

Vacuum Hose Inspection

Check hoses for connection, leakage, clog and deterioration. Replace as necessary.

EVAP Canister Purge Valve Inspection

Check EVAP canister purge valve referring to step 1 of DTC P0443 Flow Chart.
If found malfunction, replace.

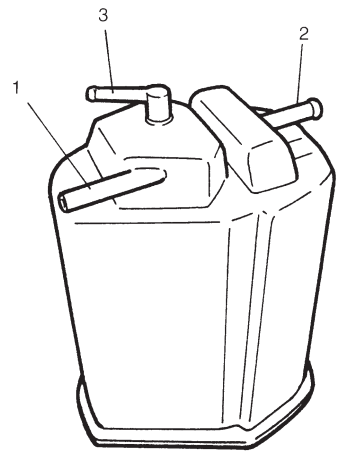

EVAP Canister Inspection

WARNING:
DO NOT SUCK nozzles on EVAP canister. Fuel vapor inside EVAP canister is harmful.

1) Check outside of EVAP canister visually.
2) Disconnect vacuum hoses from EVAP canister.
3) Check that there should be no restriction of flow through purge pipe (1) and air pipe (2) when air is blown into tank pipe (3).
   If any faulty condition is found in above inspection replace.

PCV SYSTEM

NOTE:

Be sure to check that there is no obstruction in PCV valve or its hoses before checking IAC duty, for obstructed PCV valve or hose hampers its accurate adjustment.

PCV Hose Inspection

Check hoses for connection, leakage, clog and deterioration. Replace as necessary.

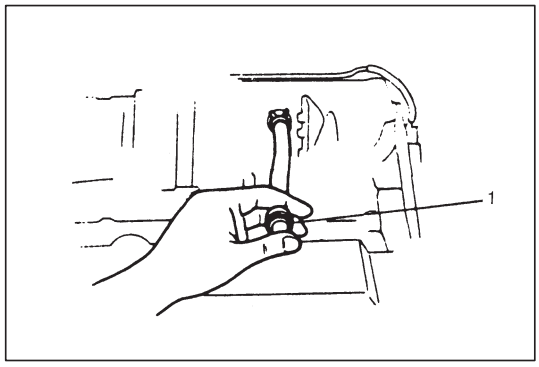

PCV Valve Inspection

1) Disconnect PCV valve (1) from cylinder head cover and install plug to head cover hole.
2) Run engine at idle.
3) Place your finger over end of PCV valve (1) to check for vacuum. If there is no vacuum, check for clogged valve. Replace as necessary.

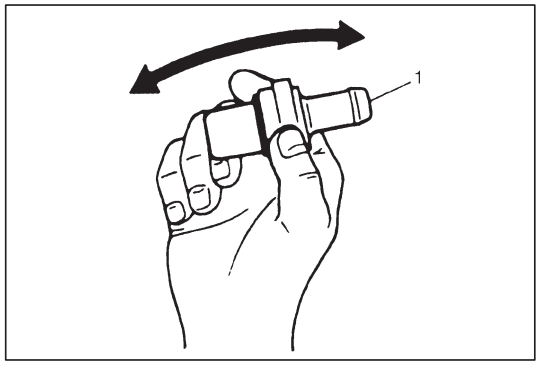

4) After checking vacuum, stop engine and remove PCV valve (1). Shake valve and listen for the rattle of check needle inside the valve. If valve does not rattle, replace valve.
5) After checking, remove plug and install PCV valve (1).

SPECIAL TOOLS

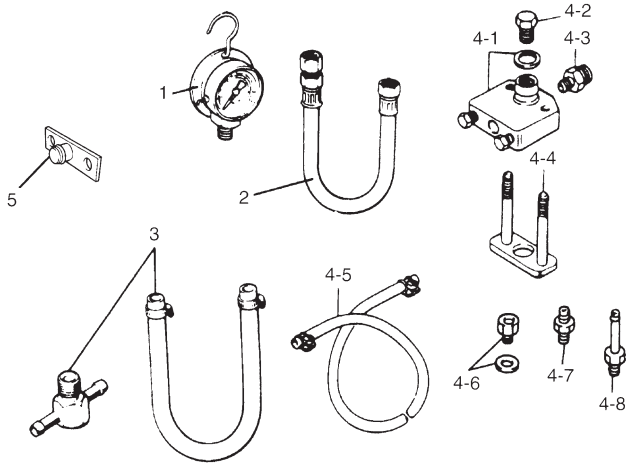

1. Pressure gauge
   09912-58441
2. Pressure hose
   09912-58431
3. 3-way joint & hose
   09912-58490
4. Checking tool set
   09912-58421

4-1. Tool body & washer
4-2. Body plug
4-3. Body attachment-1
4-4. Holder
4-5. Return hose & clamp
4-6. Body attachment-2 & washer
4-7. Hose attachment-1
4-8. Hose attachment-2

5. Checking tool plate
   09912-57610

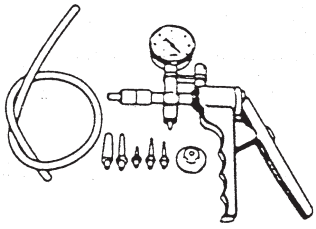

09917-47910
Vacuum pump gauge

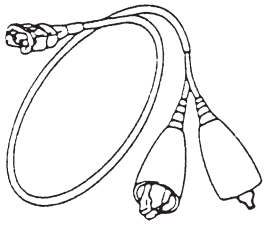

09930-88530
Injector test lead

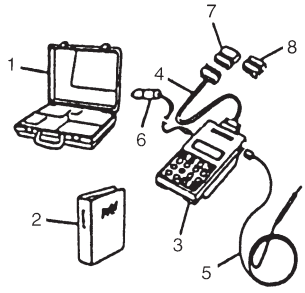

1. Storage case
2. Operator's manual
3. Tech 1A
4. DLC cable (14/26 pin, 09931-76040)
5. Test lead/probe
6. Power source cable
7. DLC cable adaptor
8. Self-test adaptor

09931-76011
SUZUKI scan tool (Tech 1A) kit

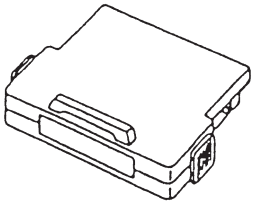

Mass storage cartridge

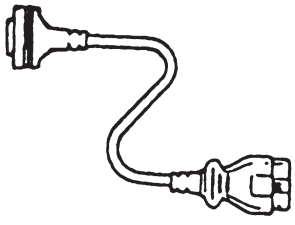

09931-76030
16/14 pin DLC cable

TIGHTENING TORQUE SPECIFICATIONS

Fastening parts	Tightening torque		
	N·m	kg-m	lb-ft
TP sensor mounting screw	2	0.2	1.5
IAC valve	3.3	0.33	2.5
ECT sensor	12	1.2	9.0
Heated oxygen sensor-1 and -2	45	4.5	32.5
Camshaft position sensor	9	0.9	6.5

SECTION 6F1

IGNITION SYSTEM (ELECTRONIC IGNITION SYSTEM)

WARNING:
For vehicles equipped with Supplemental Restraint (Air Bag) System:

- **Service on and around the air bag system components or wiring must be performed only by an authorized SUZUKI dealer. Refer to "Air Bag System Components and Wiring Location View" under "General Description" in air bag system section in order to confirm whether you are performing service on or near the air bag system components or wiring. Please observe all WARNINGS and "Service Precautions" under "On-Vehicle Service" in air bag system section before performing service on or around the air bag system components or wiring. Failure to follow WARNINGS could result in unintentional activation of the system or could render the system inoperative. Either of these two conditions may result in severe injury.**
- **Technical service work must be started at least 90 seconds after the ignition switch is turned to the "LOCK" position and the negative cable is disconnected from the battery. Otherwise, the system may be activated by reserve energy in the Sensing and Diagnostic Module (SDM).**

CONTENTS

GENERAL DESCRIPTION

The ignition system is an electronic (distributorless) ignition system. It consists of the parts as described below and has an electronic ignition control system.

- ECM
  It detects the engine and vehicle conditions through the signals from the sensors, determines the most suitable ignition timing and time for electricity to flow to the primary coil and sends a signal to the ignitor (power unit) in the ignition coil assembly.
- Ignition coil assembly (including an ignitor)
  The ignition coil assembly has a built-in ignitor which turns ON and OFF the current flow to the primary coil according to the signal from ECM. When the current flow to the primary coil is turned OFF, a high voltage is induced in the secondary coil.
- High tension cords and spark plugs.
- CMP sensor (Camshaft position sensor) and CKP sensor (Crankshaft position sensor)
  Using signals from these sensors, ECM identifies the specific cylinder whose piston is in the compression stroke and detects the crank angle.
- TP sensor, ECT sensor, MAP sensor and other sensors/switches
  Refer to section 6E for details.

Although this ignition system does not have a distributor, it has two ignition coil assemblies (one is for No.1 and No.4 spark plugs and the other is for No.2 and No.3 spark plugs). When an ignition signal is sent from ECM to the ignitor in the ignition coil assembly for No.1 and No.4 spark plugs, a high voltage is induced in the secondary coil and that passes through the high-tension cords and causes No.1 and No.4 spark plugs to spark simultaneously. Likewise, when an ignition signal is sent to the ignitor in the other ignition coil assembly, No.2 and No.3 spark plugs spark simultaneously.

SYSTEM COMPONENTS

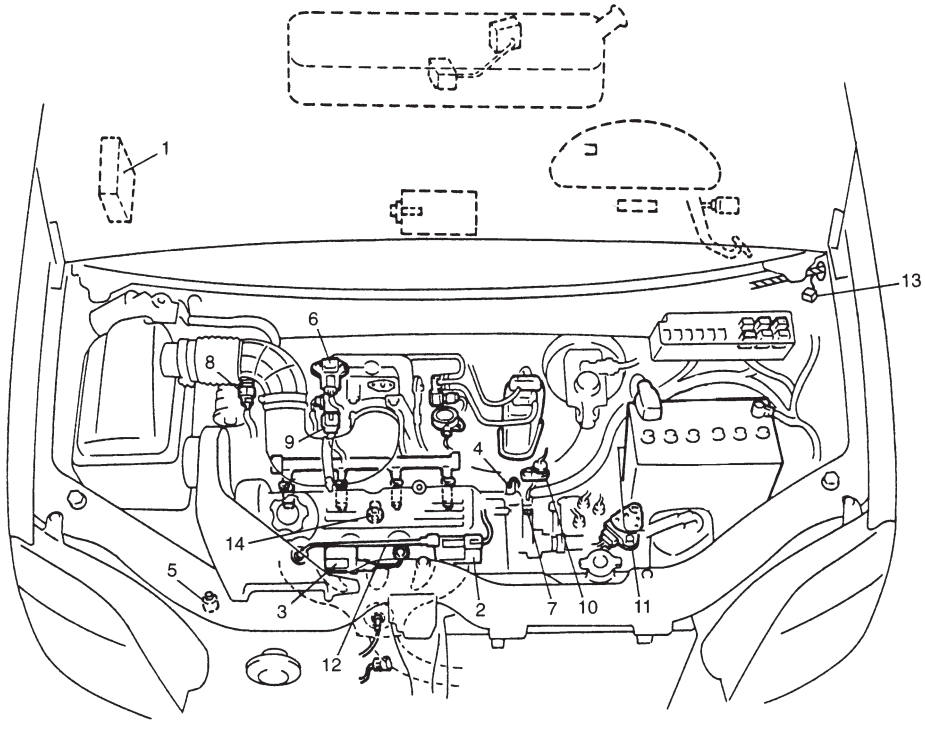

1. ECM
2. Ignition coil assembly for No.1 and No.4 spark plugs
3. Ignition coil assembly for No.2 and No.3 spark plugs
4. CMP sensor
5. CKP sensor
6. MAP sensor
7. ECT sensor
8. IAT sensor
9. TP sensor
10. VSS
11. Transmission range switch (A/T)
12. High-tension cords
13. Monitor connector
14. Knock sensor

SYSTEM WIRING DIAGRAM

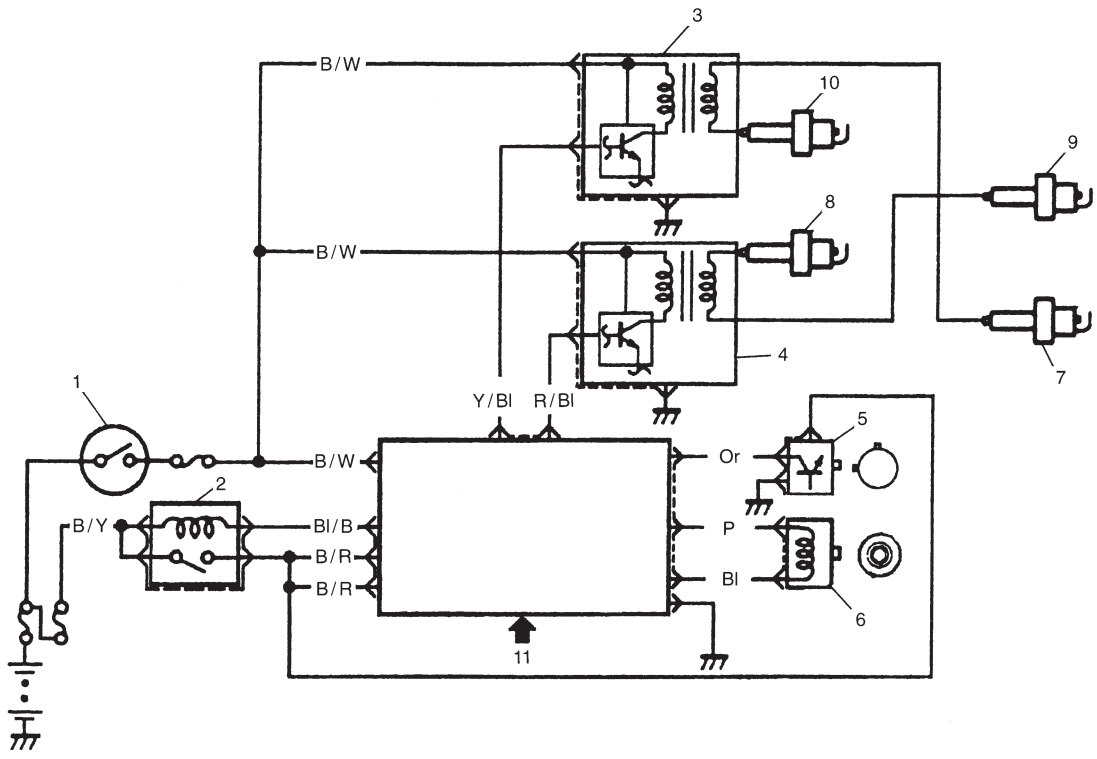

1. Ignition switch
2. Main relay
3. Ignition coil assembly for No.1 and No.4 spark plugs
4. Ignition coil assembly for No.2 and No.3 spark plugs
5. CMP sensor
6. CKP sensor
7. No.1 spark plug
8. No.2 spark plug
9. No.3 spark plug
10. No.4 spark plug
11. Sensed information
    - MAP sensor
    - ECT sensor
    - IAT sensor
    - TP sensor
    - Knock sensor
    - VSS
    - Park/Neutral position signal
    - Electric load signal
    - Engine start signal
    - Test switch terminal (Vehicle without EGR valve)

DIAGNOSIS

Condition	Possible Cause	Correction
Engine cranks, but will not start or hard to start	**No spark**	
	● Blown fuse for ignition coil	Replace.
	● Loose connection or disconnection of lead wire or high-tension cord(s)	Connect securely.
	● Faulty high-tension cord(s)	Replace.
	● Faulty spark plug(s)	Adjust, clean or replace.
	● Faulty ignition coil	Replace ignition coil assembly.
	● Faulty CKP sensor or crankshaft timing belt pulley	Clean, tighten or replace.
	● Faulty ECM	Replace.
Poor fuel economy or engine performance	● Incorrect ignition timing	Check related sensors and crankshaft timing belt pulley.
	● Faulty spark plug(s) or high-tension cord(s)	Adjust, clean or replace.
	● Faulty ignition coil assembly	Replace.
	● Faulty CKP sensor or crankshaft timing belt pulley	Clean, tighten or replace.
	● Faulty ECM	Replace.

IGNITION SYSTEM DIAGNOSTIC FLOW TABLE

STEP	ACTION	YES	NO
1	Was “ENGINE DIAG. FLOW TABLE” performed?	Go to Step 2.	Go to “ENGINE DIAG. FLOW TABLE” in section 6.
2	Ignition Spark Test 1) Check all spark plugs for condition and type referring to “Spark Plugs” section. 2) If OK, perform ignition spark test, referring to “Ignition Spark Test” section. Is spark emitted from all spark plugs?	Go to Step 11.	Go to Step 3.
3	Diagnostic Trouble Code (DTC) Check Is DTC stored in ECM?	Go to applicable DTC Diag. Flow Table in section 6.	Go to Step 4.
4	Electrical Connection Check 1) Check ignition coil assemblies and high-tension cords for electrical connection. Are they connected securely?	Go to Step 5.	Connect securely.
5	High-Tension Cords Check 1) Check high-tension cord for resistance referring to “High-Tension Cords” section. Is check result satisfactory?	Go to Step 6.	Replace high-tension cord(s).
6	Ignition Coil Assembly Power Supply and Ground Circuit Check 1) Check ignition coil assembly power supply and ground circuits for open and short. Are circuits in good condition?	Go to Step 7.	Repair or replace.
7	Ignition Coil Assembly Check 1) Check ignition coil for resistance referring to “Ignition Coil Assembly” section. Is check result satisfactory?	Go to Step 8.	Replace ignition coil assembly.
8	Crankshaft Position (CKP) Sensor Check 1) Check crankshaft position sensor referring to Step 3 and 4 of DTC P0335 Diag. Flow Table in section 6. Is check result satisfactory?	Go to Step 9.	Tighten CKP sensor bolt, replace CKP sensor or crankshaft timing belt pulley.
9	Ignition Trigger Signal Circuit Check 1) Check ignition trigger signal wire for open, short and poor connection. Is circuit in good condition?	Go to Step 10.	Repair or replace.
10	A Known-good Ignition Coil Assembly Substitution 1) Substitute a known-good ignition coil assembly and then repeat Step 2. Is check result of Step 2 satisfactory?	Go to Step 11.	Substitute a known-good ECM and then repeat Step 2.
11	Ignition Timing Check 1) Check initial ignition timing and ignition timing advance referring to “Ignition Timing” section. Is check result satisfactory?	System is in good condition.	Check CKP sensor, crankshaft timing belt pulley (signal rotor) and input signals related to this system.

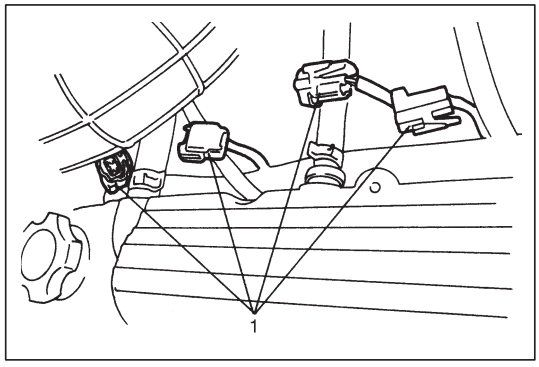

ON-VEHICLE SERVICE

IGNITION SPARK TEST

1) Disconnect all injector couplers (1) from injectors.

> **WARNING:**
> **Without disconnection of injector couplers, combustible gas may come out from spark plug holes during this test and may get ignited in engine room.**

2) Remove spark plug and check it for condition and type referring to “Spark Plugs” in this section.
3) If OK, connect ignition coil coupler to ignition coil assembly and connect spark plug to ignition coil assembly or high-tension cord. Ground spark plug.
4) Crank engine and check if each spark plug sparks.
5) If no spark is emitted, inspect the related parts as described under “Diagnosis” earlier in this section.

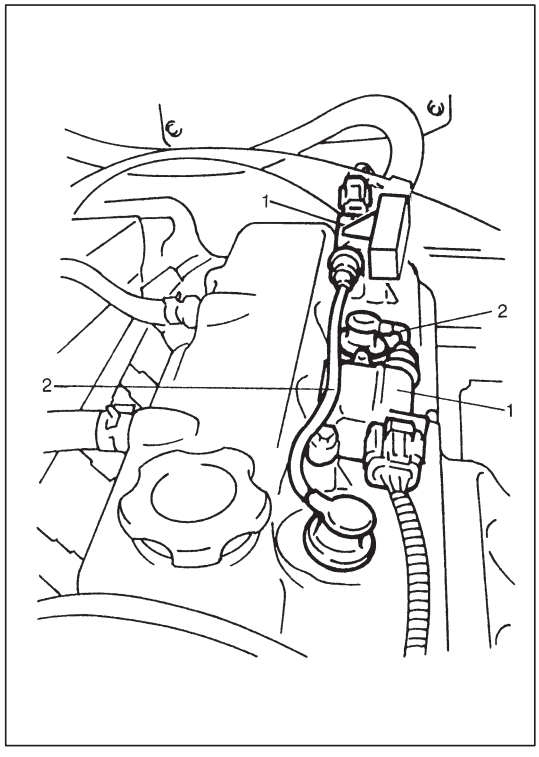

HIGH-TENSION CORDS

1) Disconnect high-tension cords (2) from ignition coil assemblies (1) while gripping each cap.
2) Pull out high-tension cords from spark plugs while gripping each cap.

> **CAUTION:**
> - **Removal of high-tension cords together with clamps will be recommended so as not to damage their inside wire (resistive conductor).**
> - **For the same reason, pull out each connection by gripping cap portion.**

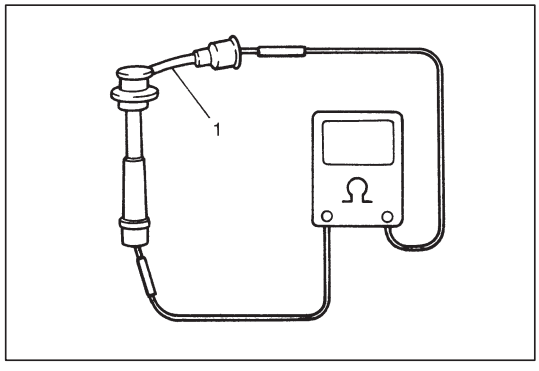

3) Measure resistance of high-tension cord (1) by using ohmmeter.

   High-tension cord resistance: 10 – 22 kΩ/m (3.0 – 6.7 kΩ/ft)

4) If resistance exceeds specification, replace high-tension cord(s).

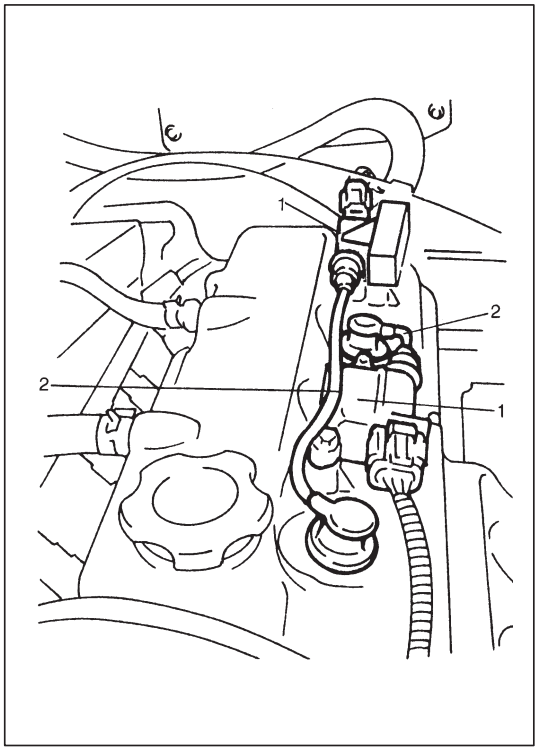

5) Install high-tension cords (2) to spark plugs and ignition coil assemblies (1) while gripping each cap.

CAUTION:
- **Never attempt to use metal conductor high-tension cords as replacing parts.**
- **Insert each cap portion fully when installing high-tension cords.**

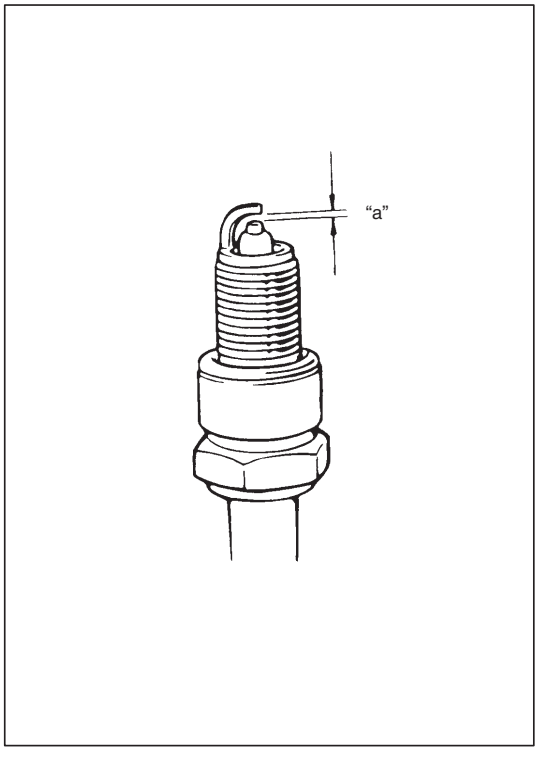

SPARK PLUGS

1) Pull out high-tension cords by gripping their caps and then remove ignition coil assemblies referring to IGNITION COIL ASSEMBLY in this section.
2) Remove spark plugs.
3) Inspect them for:
   - Electrode wear
   - Carbon deposits
   - Insulator damage
4) If any abnormality is found, adjust air gap, clean with spark plug cleaner or replace them with specified new plugs.

Spark plug air gap "a"	**: 1.0 – 1.1 mm (0.040 – 0.043 in.)**	
Spark plug type	**: NGK**	**BKR6E-11**
	: DENSO	**K20PR-U11**

5) Install spark plugs and torque them to specification.

   Tightening Torque for spark plug
   28 N·m (2.8 kg-m, 20.0 lb-ft)
6) Install ignition coil assemblies referring to IGNITION COIL ASSEMBLY in this section.
7) Install high-tension cords securely by gripping their caps.

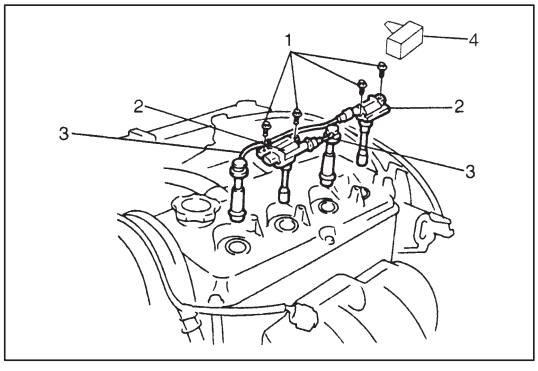

IGNITION COIL ASSEMBLY (INCLUDING IGNITOR)

Inspection

1) Disconnect negative cable at battery.
2) Remove ignition coil cover (4).
3) Disconnect ignition coil coupler.
4) Disconnect high-tension cord (3) from ignition coil assembly (2).
5) Remove ignition coil bolts (1) and then pull out ignition coil assembly.

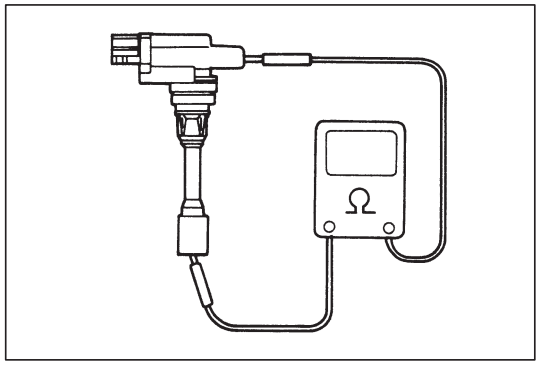

6) Measure secondary coil for resistance.

   Secondary coil resistance : 7.6 – 10.2 kΩ at 20°C, 68°F

   If resistance is out of specification, replace ignition coil assembly.
7) Install ignition coil assembly.
8) Tighten ignition coil bolts, and then connect ignition coil coupler.
9) Install high-tension cord to ignition coil assembly while gripping its cap.
10) Install ignition coil cover certainly.

CRANKSHAFT POSITION SENSOR (CKP SENSOR)

Refer to section 6E for removal, inspection and installation.

IGNITION TIMING

NOTE:

- **Ignition timing is not adjustable. If ignition timing is out of specification, check system related parts.**
- **Before starting engine, place transmission gear shift lever in "Neutral" (shift selector lever to "P" range for A/T model), and set parking brake.**

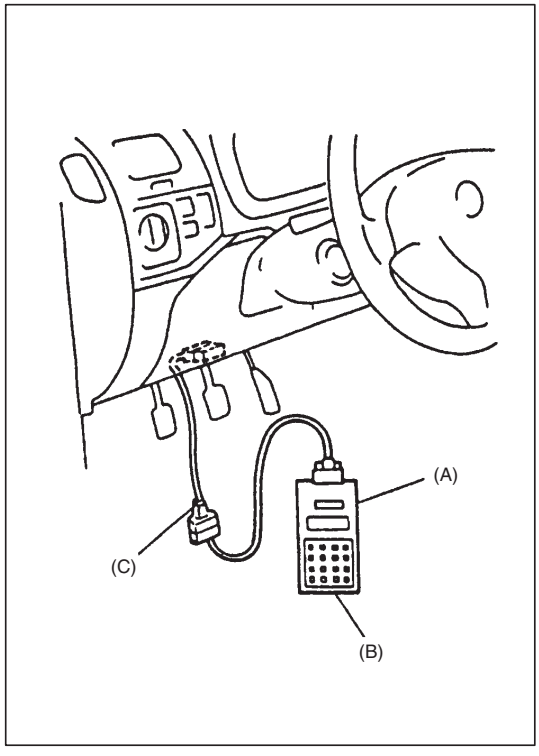

INSPECTION

1) When using SUZUKI scan tool, connect SUZUKI scan tool to DLC with ignition switch OFF.

   Special Tool
   (A): 09931-76011 (SUZUKI scan tool)
   (B): Mass storage cartridge
   (C): 09931-76030 (16/14 pin DLC cable)

2) Start engine and warm it up to normal operating temperature.
3) Make sure that all of electrical loads except ignition are switched off.
4) Check to be sure that idle speed is within specification. (Refer to SECTION 6E)

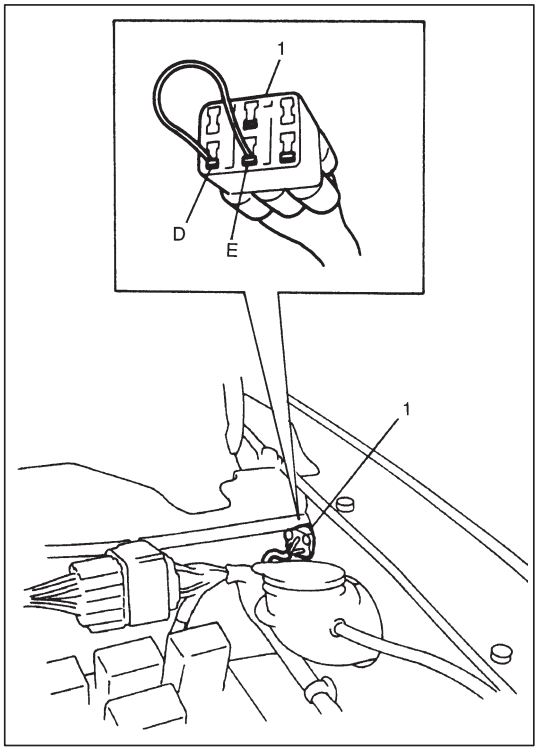

5) Fix ignition timing to initial one as follows.
   When using SUZUKI scan tool:
   Select “MISC” mode on SUZUKI scan tool and fix ignition timing to initial one.
   When not using SUZUKI scan tool:
   Disconnect scan tool from DLC, and connect D and E terminals of diagnosis connector (1) or E to body ground by using service wire so that ignition timing is fixed on initial one.

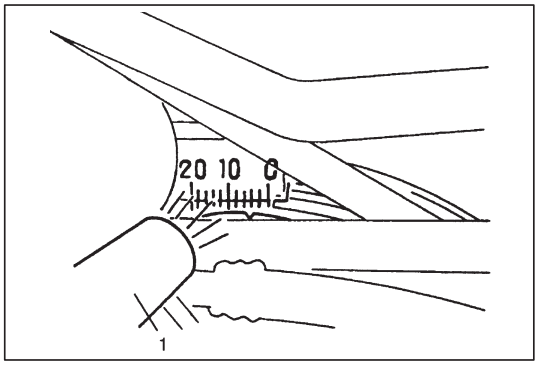

6) Open air cleaner upper case and shift upper case and hose position to observe ignition timing.
7) Using timing light (1), check that ignition timing is within specification.

Initial ignition timing (Test switch terminal grounded or fixed with SUZUKI scan tool)	**: 5 ± 3° BTDC at idle speed**
Ignition order	**: 1-3-4-2**

8) If ignition timing is out of specification, check the followings:
   - CKP sensor
   - Crankshaft timing belt pulley (signal rotor)
   - TP sensor
   - Test switch signal circuit
   - VSS
   - Timing belt cover installation
9) After checking Initial Ignition Timing, release ignition timing fixation by using SUZUKI scan tool or disconnect service wire from diagnosis connector.
10) With engine idling (test switch terminal ungrounded, throttle opening at closed position and car stopped), check that ignition timing is about 9°–15° BTDC. (Constant variation within a few degrees from 9°–15° indicates no abnormality but proves operation of electronic timing control system.) Also, check that increasing engine speed advances ignition timing.
    If above check results are not satisfactory, check CKP sensor, test switch terminal circuit and ECM.
11) Install air cleaner upper case.

SPECIAL TOOLS

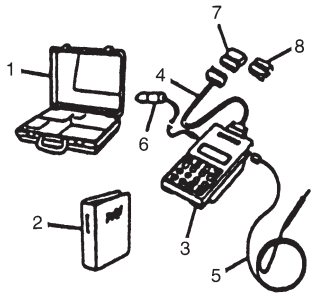 1. Storage case 2. Operator's manual 3. Tech 1A 4. DLC cable (14/26 pin, 09931-76040) 5. Test lead/probe 6. Power source cable 7. DLC cable adaptor 8. Self-test adaptor 09931-76011 SUZUKI scan tool (Tech 1A) kit	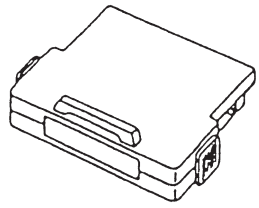 Mass storage cartridge	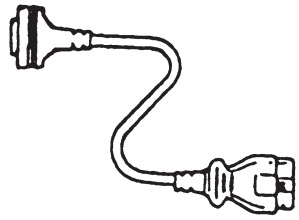 09931-76030 16/14 pin DLC cable

SECTION 6G

CRANKING SYSTEM
(1.2 kW Reduction Type)

NOTE:
Starting motor vary depending on specifications, etc.
Therefore, be sure to check model and specification of the vehicle being serviced before replacing parts.

CONTENTS

GENERAL DESCRIPTION

CRANKING CIRCUIT

The cranking circuit consists of the battery, starting motor, ignition switch, and related electrical wiring. These components are connected electrically.
Only the starting motor will be covered in this section.

STARTING MOTOR CIRCUIT

In the circuit shown in the following, the magnetic switch coils are magnetized when the ignition switch is closed. The resulting plunger and pinion drive lever movement causes the pinion to engage the engine flywheel gear and the magnetic switch main contacts to close, and cranking takes place.
When the engine starts, the pinion over-running clutch protects the armature from excessive speed until the switch is opened, at which time the return spring causes the pinion to disengage.

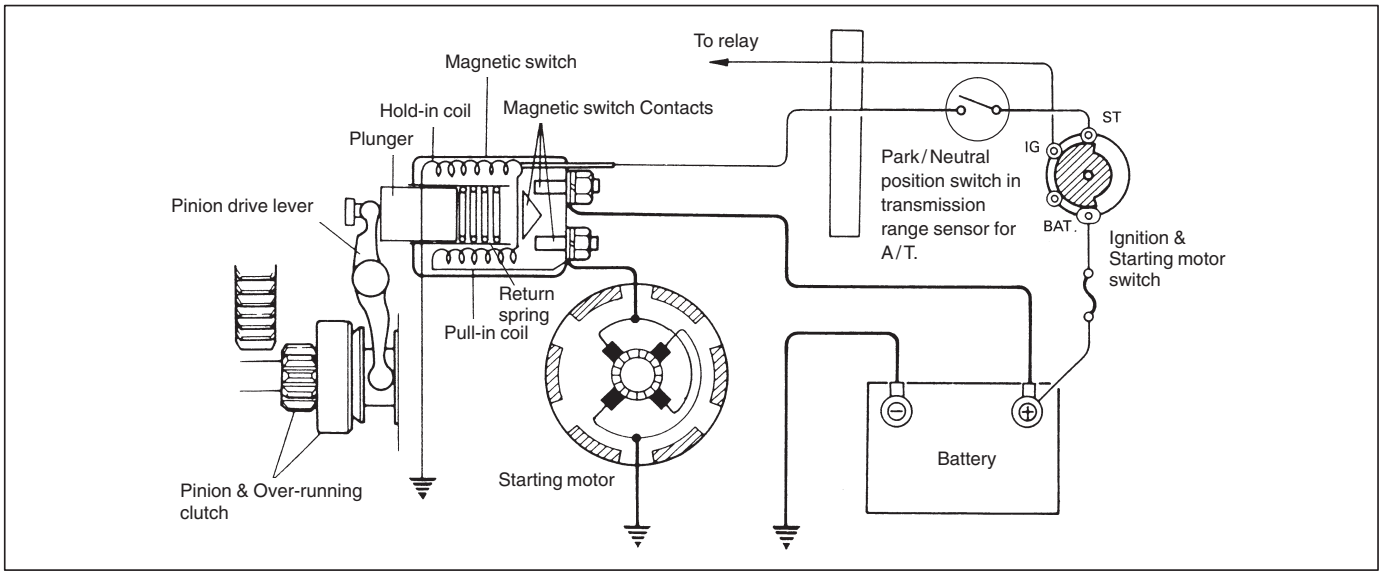

STARTING MOTOR

The starting motor consist of the following parts.

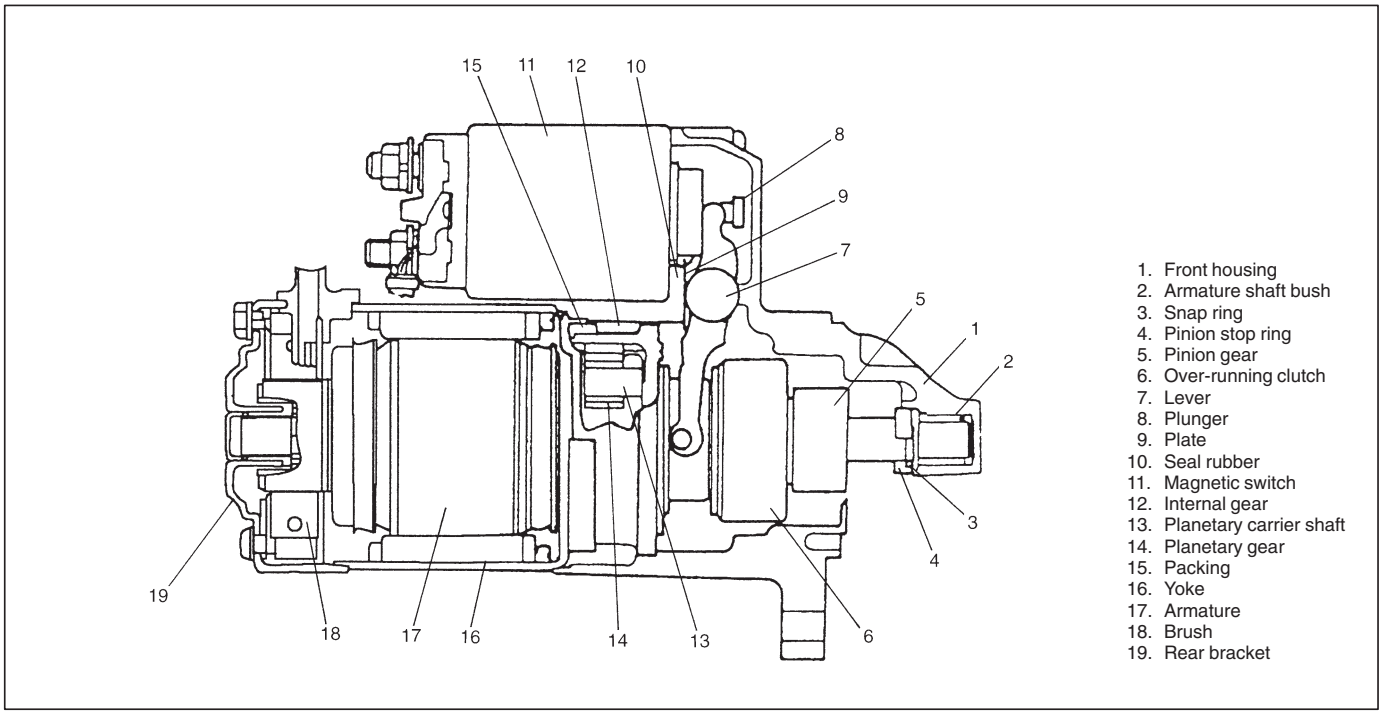

DIAGNOSIS

Possible symptoms due to starting system trouble would be as follows:
- Starting motor does not run (or runs slowly)
- Starting motor runs but fails to crank engine
- Abnormal noise is heard
- Starting motor does not stop running

Proper diagnosis must be made to determine exactly where the cause of each trouble lies.....in battery, wiring harness, (including ignition and starting motor switch), starting motor or engine.

Do not remove motor just because starting motor does not run. Check the following items and narrow down scope of possible causes.
- Condition of trouble
- Tightness of battery terminals (including ground cable connection on engine side) and starting motor terminals
- Discharge of battery
- Mounting of starting motor

Condition	Possible Cause	Correction
Motor not running	**No operating sound of magnetic switch**	
	● Shift lever switch is not in P or N, or not adjusted (A/T)	Shift in P or N, or adjust switch.
	● Battery run down	Recharge battery.
	● Battery voltage too low due to battery deterioration	Replace battery.
	● Poor contact in battery terminal connection	Retighten or replace.
	● Loose grounding cable connection	Retighten.
	● Fuse set loose or blown off	Tighten or replace.
	● Poor contacting action of ignition switch and magnetic switch	Replace.
	● Lead wire coupler loose in place	Retighten.
	● Open-circuit between ignition switch and magnetic switch	Repair.
	● Open-circuit in pull-in coil	Replace magnetic switch.
	● Brushes are seating poorly or worn down	Repair or replace.
	● Poor sliding or plunger and/or pinion	Repair.
	Operating sound of magnetic switch heard	
	● Battery run down	Recharge battery.
	● Battery voltage too low due to battery deterioration	Replace battery.
	● Loose battery cable connections	Retighten.
	● Burnt main contact point, or poor contacting action of magnetic switch	Replace magnetic switch.
	● Brushes are seating poorly or worn down	Repair or replace.
	● Weakened brush spring	Replace.

Condition	Possible Cause	Correction
Motor not running	● Burnt commutator	Replace armature.
	● Grounding of field coil	Repair.
	● Layer short-circuit of armature	Replace.
	● Crankshaft rotation obstructed	Repair.
Starting motor running but too slow (small torque)	**If battery and wiring are satisfactory, inspect starting motor**	
	● Insufficient contact of magnetic switch main contacts	Replace magnetic switch.
	● Layer short-circuit of armature	Replace.
	● Disconnected, burnt or worn commutator	Replace armature.
	● Worn brushes	Replace brush.
	● Weakened brush springs	Replace spring.
	● Burnt or abnormally worn end bush	Replace bush.
Starting motor running, but not cranking engine	● Worn pinion tip	Replace over-running clutch.
	● Poor sliding of over-running clutch	Repair.
	● Over-running clutch slipping	Replace over-running clutch.
	● Worn teeth of ring gear	Replace flywheel (M/T) or drive plate (A/T).
Noise	● Abnormally worn bush	Replace bush.
	● Worn pinion or worn teeth of ring gear	Replace over-running clutch, flywheel (M/T) or drive plate (A/T).
	● Poor sliding of pinion (failure in return movement)	Repair or replace.
	● Worn internal or planetary gear teeth	Replace.
	● Lack of oil in each part	Lubricate.
Starting motor does not stop running	● Fused contact points of magnetic switch	Replace magnetic switch.
	● Short-circuit between turns of magnetic switch coil (layer short-circuit)	Replace magnetic switch.
	● Failure of returning action in ignition switch	Replace.

UNIT REPAIR OVERHAUL

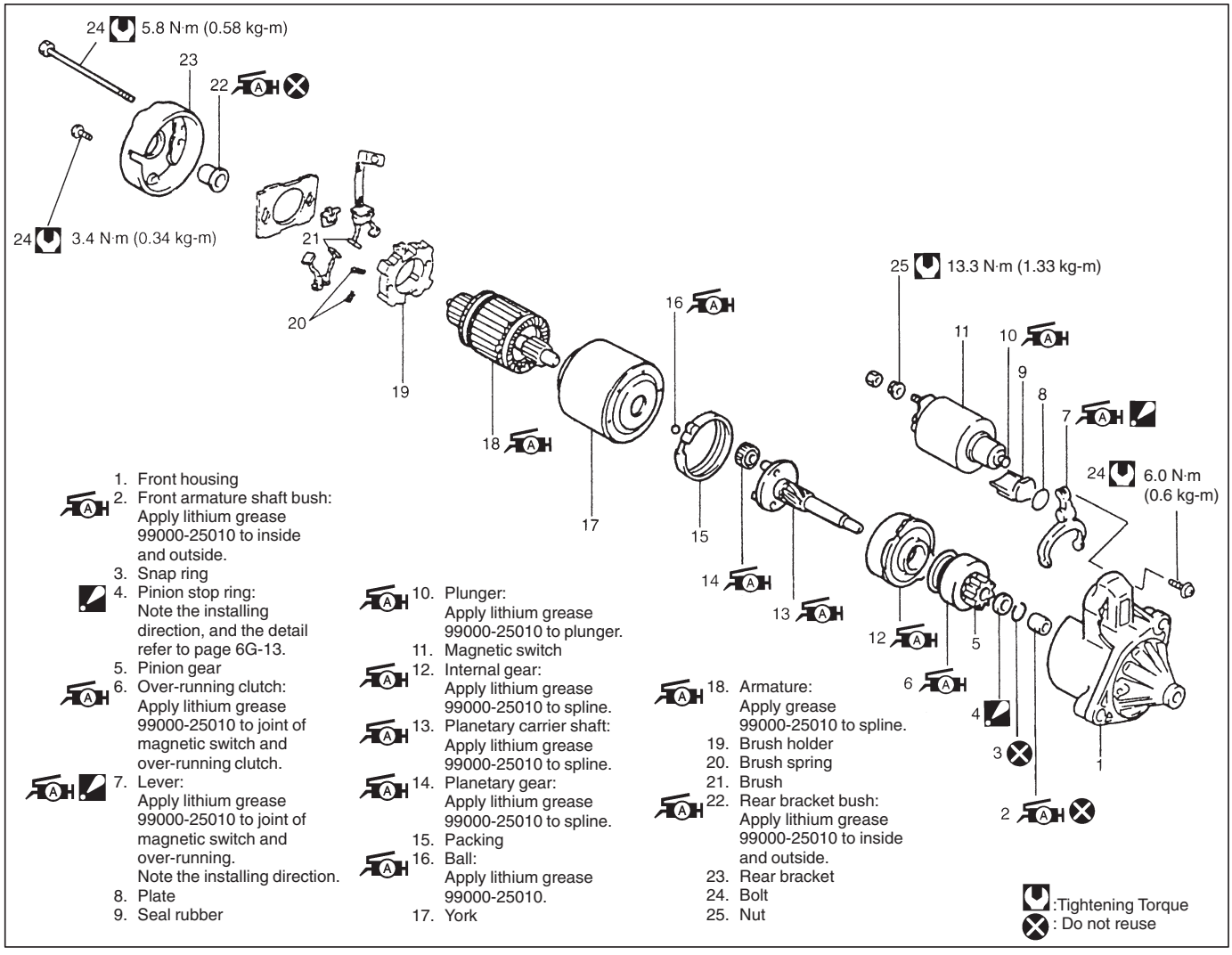

For overhauling of starting motor, it is recommended that component parts should be cleaned thoroughly. However, yoke, armature coil, over-running clutch, magnetic switch assembly, rubber or plastic parts are NOT ALLOWED to be washed in degreasing tank or with grease dissolving solvent. Those parts should be cleaned by blowing air and wiping with cloth.

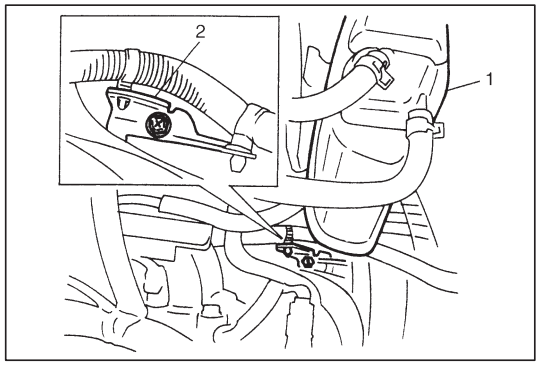

DISMOUNTING AND REMOUNTING

1) Disconnect positive (+) and negative (–) battery lead cables at battery.
2) Remove battery and battery tray.
3) Disconnect EVAP canister (1) and remove cable clamp (2).

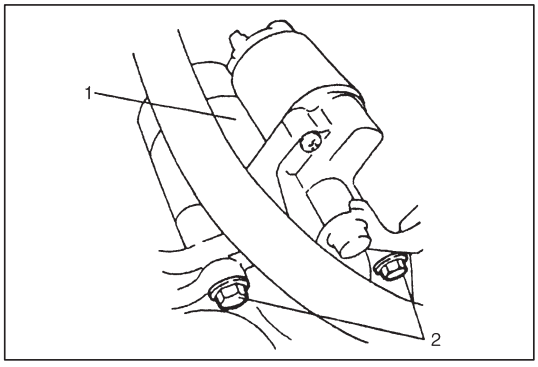

4) Disconnect magnetic switch lead wire and battery cable from starting motor (1).
5) Remove two starting motor mount bolts (2).
6) Remove starting motor.
7) To install, reverse the above procedure.

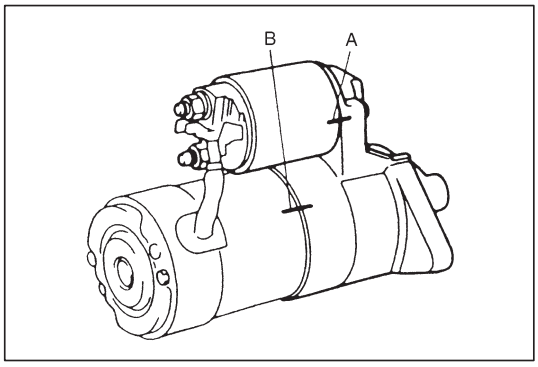

DISASSEMBLY

NOTE:

- **Before disassembling starting motor, be sure to put match marks at two locations (A & B) as shown so that any possible mistake can be avoided.**
- **Do not clamp yoke in a vise or strike it with a hammer during repair operations.**

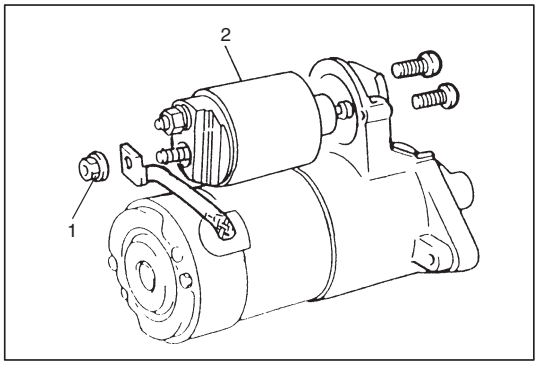

1) Remove nut (1) securing the end of field coil lead to terminal on the head of magnetic switch.
2) Remove magnetic switch (2).

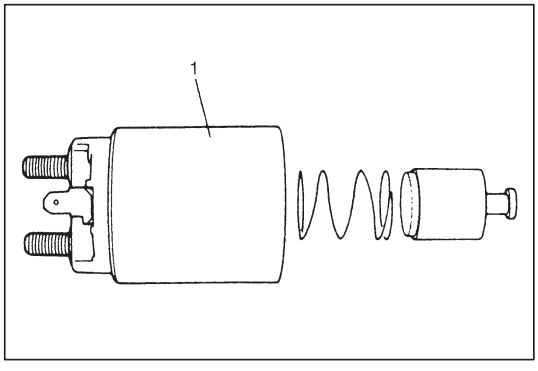

NOTE:
Don't disassemble magnetic switch (1). If defective, replace as a complete assembly.

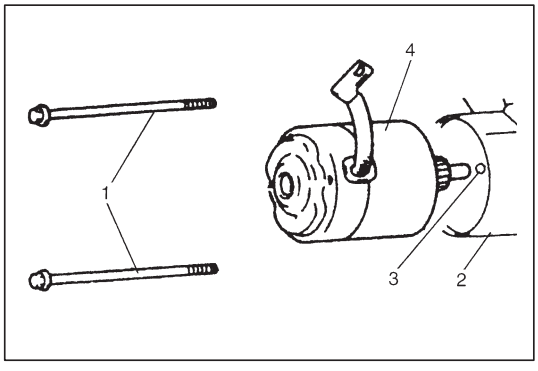

3) Remove bolts (1), then separate reduction gear assembly (2) and ball (3) from starting motor assembly (4).

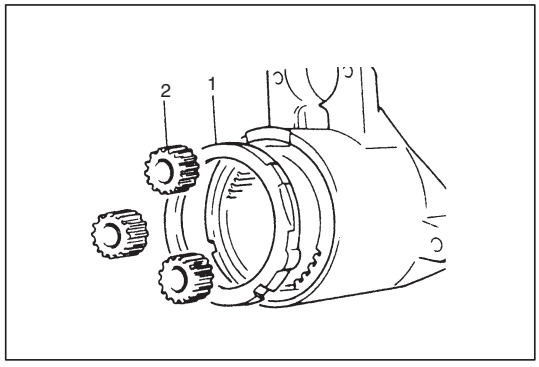

4) Remove packing (1) and planetary gears (2).

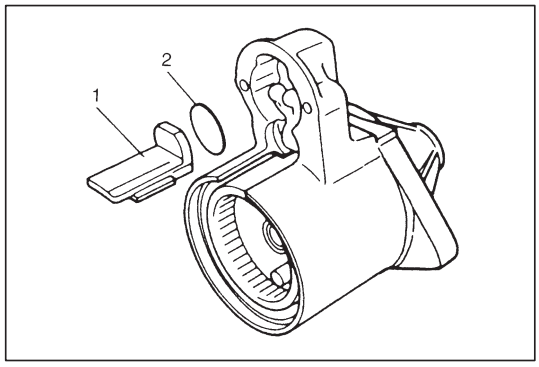

5) Remove seal rubber (1) and plate (2).

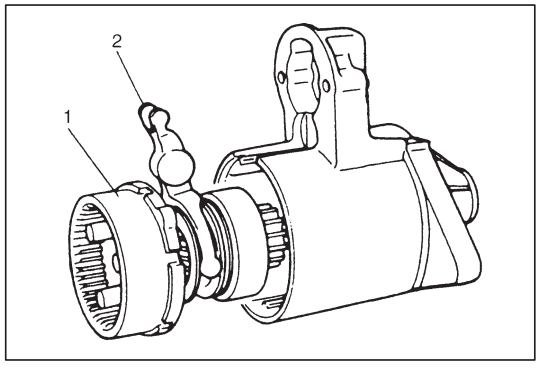

6) Remove shaft assembly (1) with lever (2).

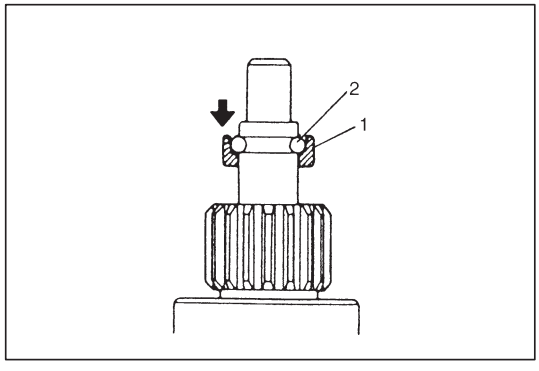

7) Loosen pinion stop ring (1) fixed by snap ring (2).

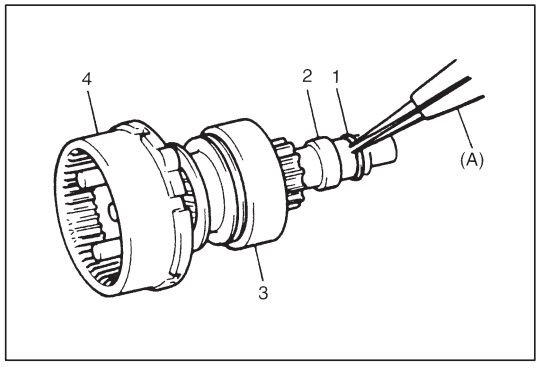

8) Remove snap ring (1), and then pull out pinion stop ring (2), over-running clutch (3) and internal gear (4).

Special Tool
(A): 09900-06107

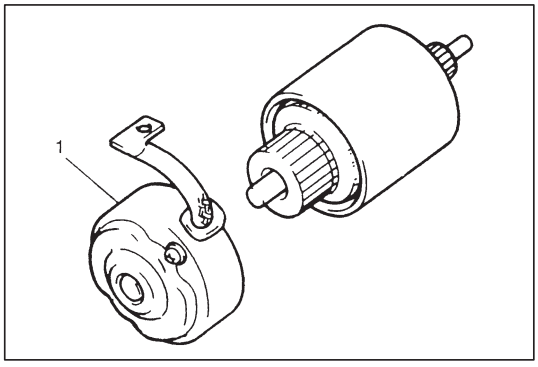

9) Remove rear bracket (1) with brush holder.

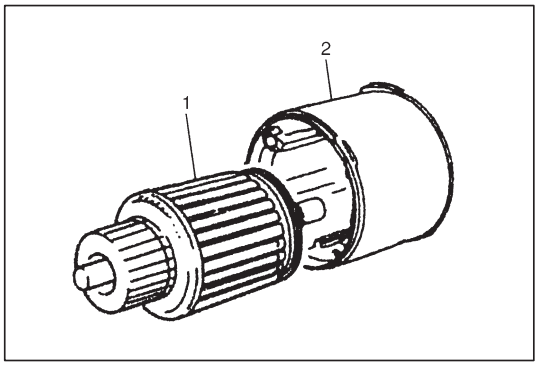

10) Remove armature (1) from yoke (2).

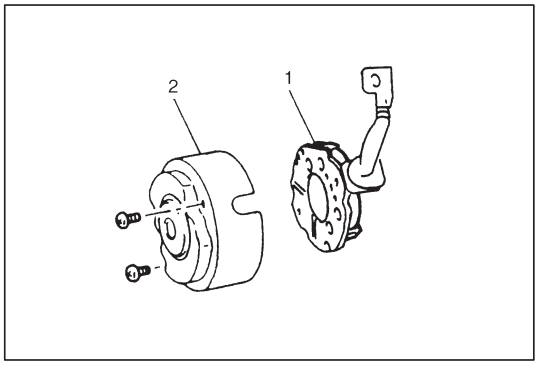

11) Remove brush holder (1) from rear bracket (2).

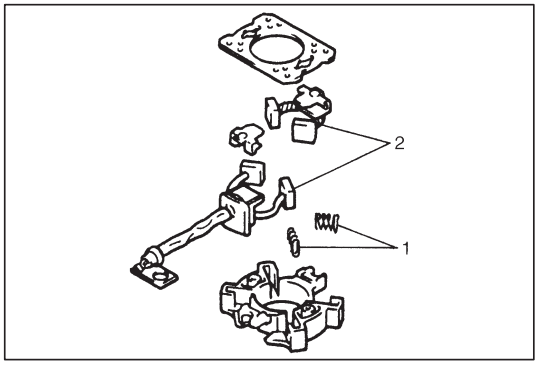

12) Remove brush springs (1) and brushes (2).

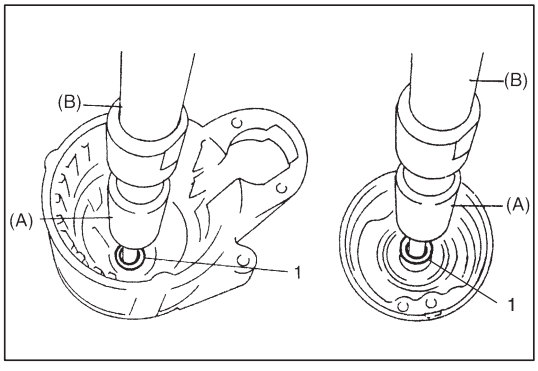

13) Remove armature shaft bushes (1) using special tools.

Special Tool
(A): 09921-20200
(B): 09930-30102

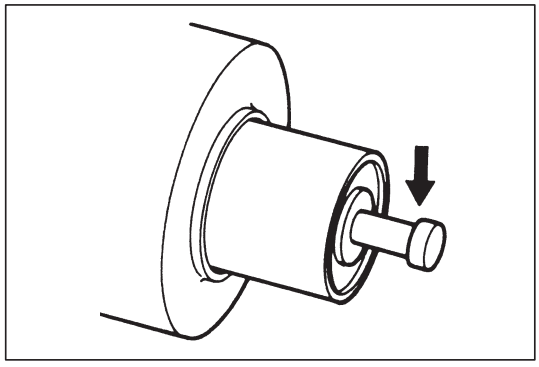

INSPECTION

PLUNGER

Inspect plunger for wear. Replace if necessary.

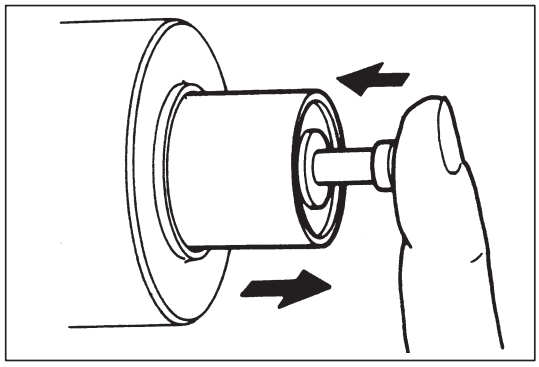

MAGNETIC SWITCH

Push in plunger and release it. The plunger should return quickly to its original position. Replace if necessary.

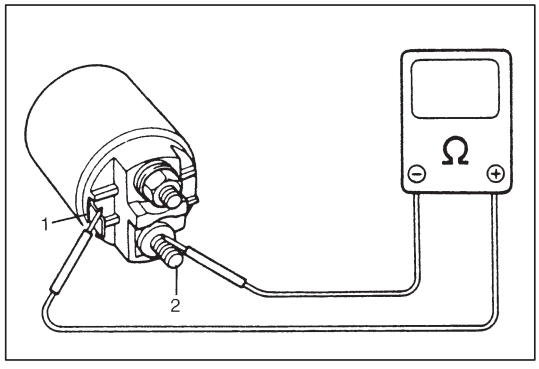

- **Pull-In Coil Open Circuit Test**
  Check for continuity across magnetic switch ‘S’ terminal (1) and ‘M’ terminal (2). If no continuity exists, coil is open and should be replaced.

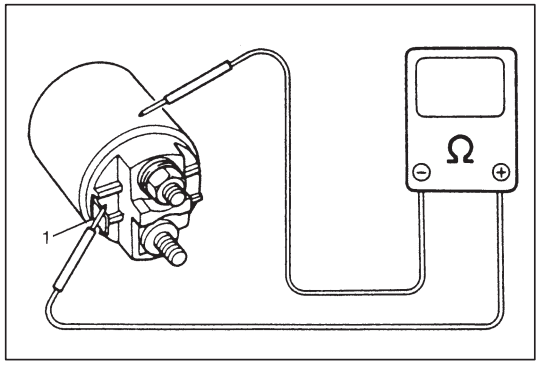

- **Hold-In Coil Open Circuit Test**
  Check for continuity across magnetic switch ‘S’ terminal (1) and coil case. If no continuity exists, coil is open and should be replaced.

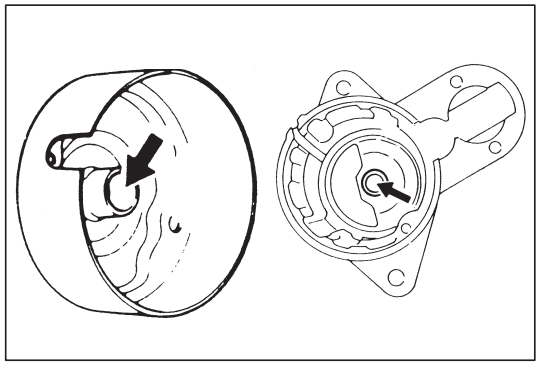

ARMATURE SHAFT BUSH

Inspect bushes for wear or damage. Replace if necessary.

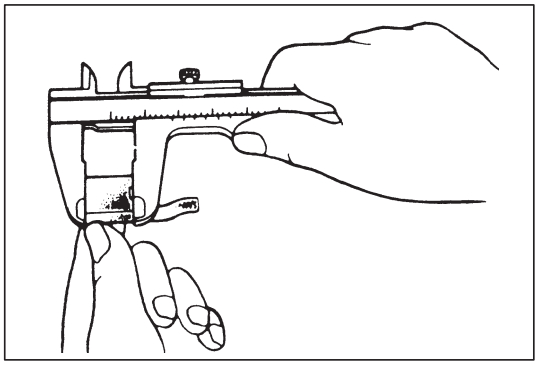

BRUSH

- Check brushes for wear.
  Measure length of brushes and if below limit, replace brush.

Brush length

Standard	12.3 mm (0.44 in.)
Limit	7 mm (0.28 in.)

- Install brushes to each brush holder and check for smooth movement.

SPRING

- Inspect brush springs for wear, damage or other abnormal conditions. Replace if necessary.

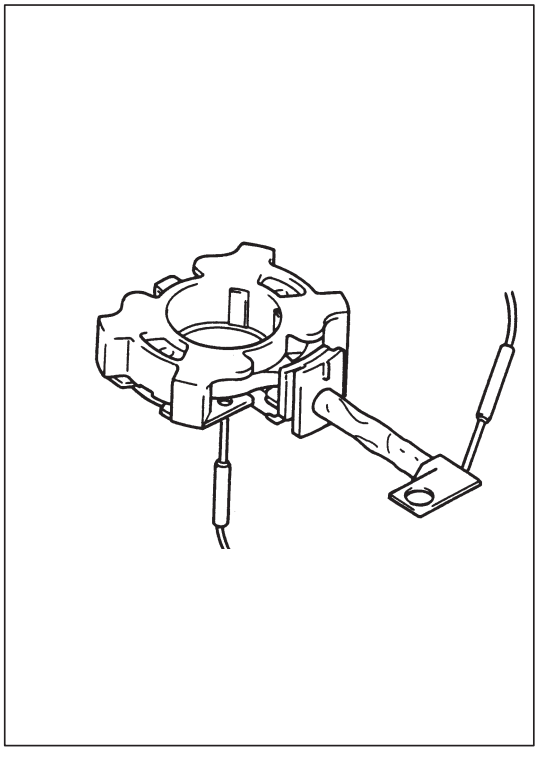

BRUSH HOLDER

- Check movement of brush in brush holder. If brush movement within brush holder is sluggish, check brush holder for distortion and sliding faces for contamination. Clean or correct as necessary.
- Check for continuity across brush positive terminal and grounded brush holder. If continuity exists, brush holder is grounded due to defective insulation and should be replaced.

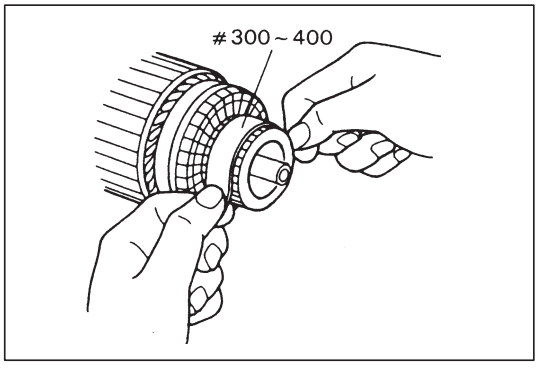

ARMATURE

- Inspect commutator for dirt or burn. Correct with sandpaper or lathe, if necessary.

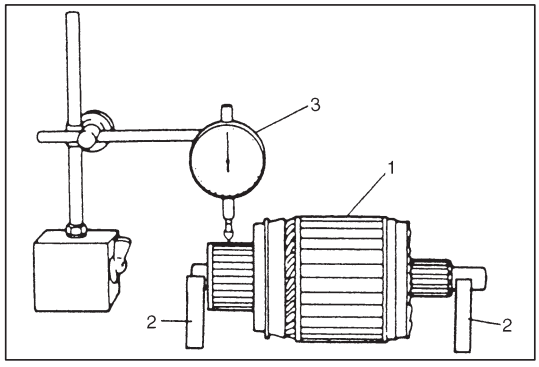

- Check commutator for uneven wear with armature (1) supported on V-blocks (2). If deflection of dial gauge (3) pointer exceeds limit, repair or replace.

NOTE:
Below specification presupposes that armature is free from bend. Bent armature must be replaced.

Commutator out of round
Standard : 0.05 mm (0.002 in.) or less
Limit : 0.4 mm (0.015 in.)

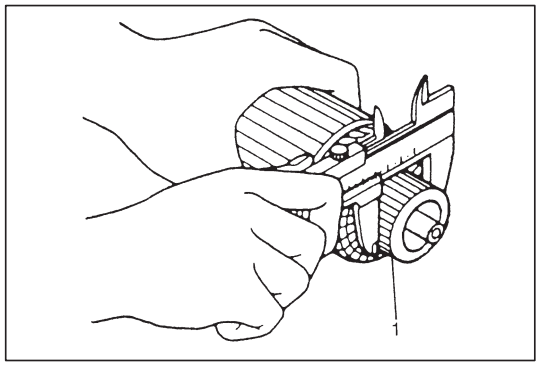

- Inspect commutator (1) for wear. If diameter is below limit, replace armature.

Commutator outside diameter
Standard : 29.4 mm (1.16 in.)
Limit : 28.8 mm (1.13 in.)

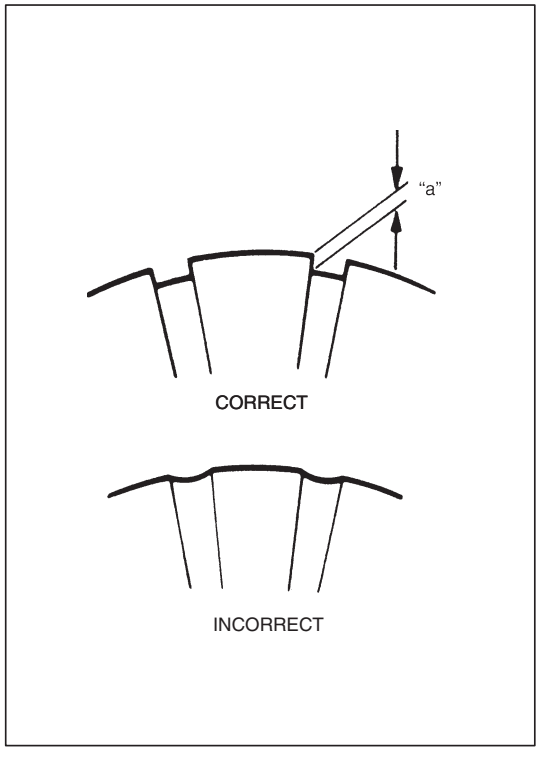

- Inspect commutator for wear or abnormal condition. Replace if necessary.

Commutator insulator reference depth "a"
Standard : 0.4 – 0.6 mm (0.015 – 0.023 in.)
Limit : 0.2 mm (0.008 in.)

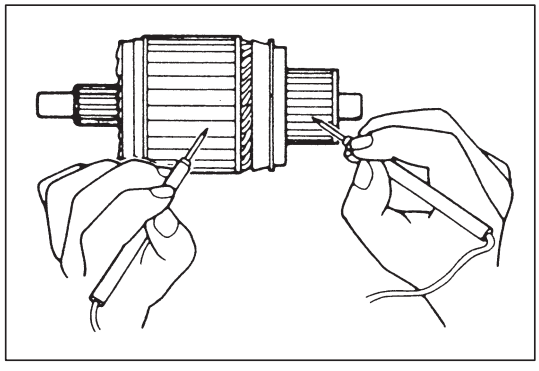

- **Ground Test**
  Check commutator and armature core. If there is continuity, armature is grounded and must be replaced.

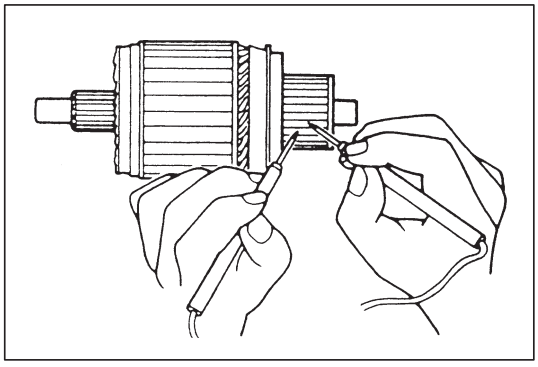

- **Open Circuit Test**
  Check for continuity between segments. If there is no continuity at any test point, there is an open circuit and armature must be replaced.

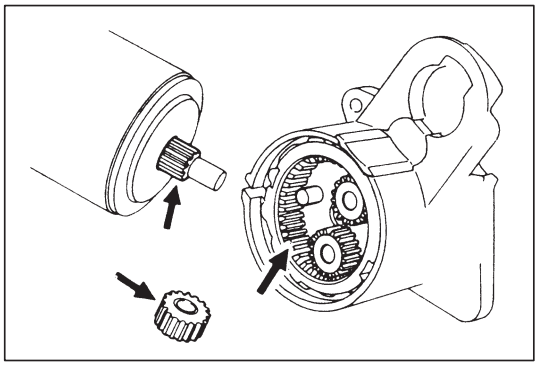

GEARS

Inspect internal gear and planetary gears for wear, damage or other abnormal conditions. Replace if necessary.

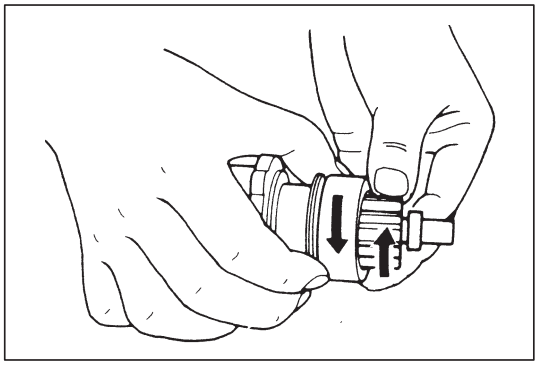

PINION AND OVER-RUNNING CLUTCH

- Inspect pinion for wear, damage or other abnormal conditions. Check that clutch locks up when turned in direction of drive and rotates smoothly in reverse direction. Replace if necessary.

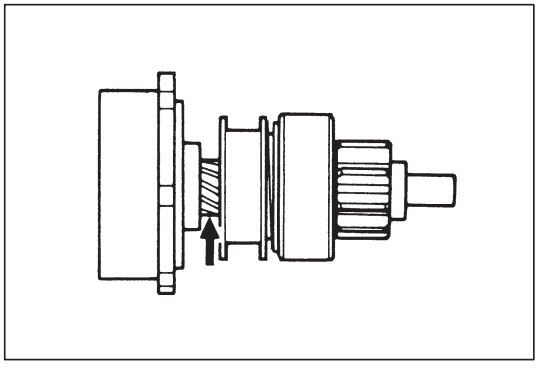

- Inspect spline teeth for wear or damage. Replace if necessary. Inspect pinion for smooth movement.

REASSEMBLY

CAUTION:
New oilless bearing have been lubricated when they are supplied as spare parts. DO NOT wash with grease dissolving solvent nor lubricate them with other lubricant.

1) Apply grease (Refer to page 6G-5).
2) Install armature to yoke.

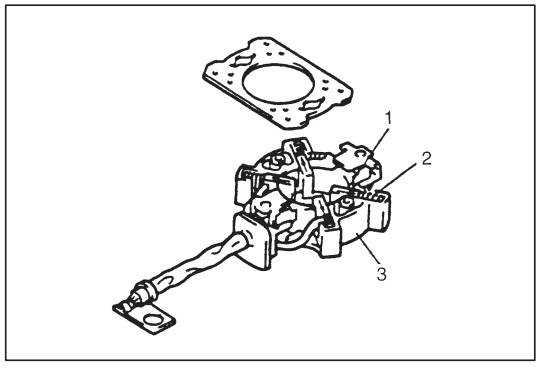

3) Install brushes (1) and brush springs (2) to brush holder (3).
4) Install brush holder to armature while pushing 4 brushes outward.

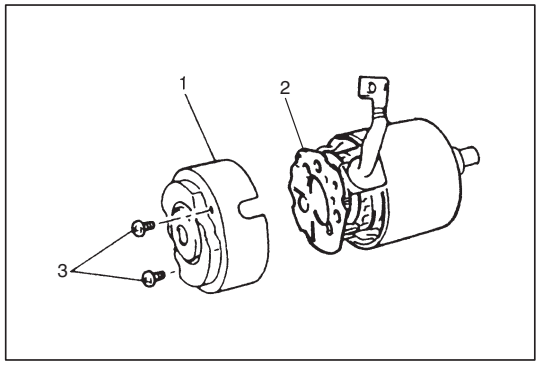

5) Install new rear armature shaft bush.
6) Install rear bracket (1) to brush holder (2).
7) Tighten brush holder screws (3).

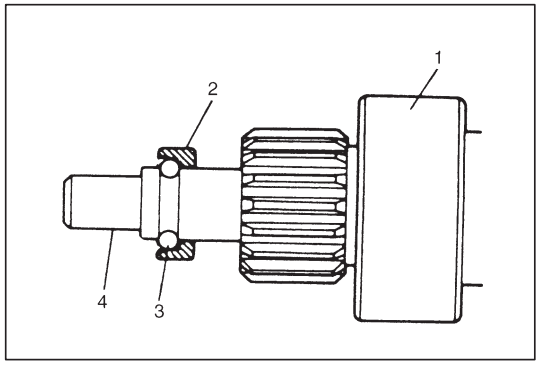

8) Install over-running clutch (1), pinion stop ring (2) and snap ring (3) to gear shaft (4).

NOTE:
Care for installing direction of pinion stop ring.

9) Set pinion stop ring at the position as shown.
10) Install new front armature shaft bush to front housing.

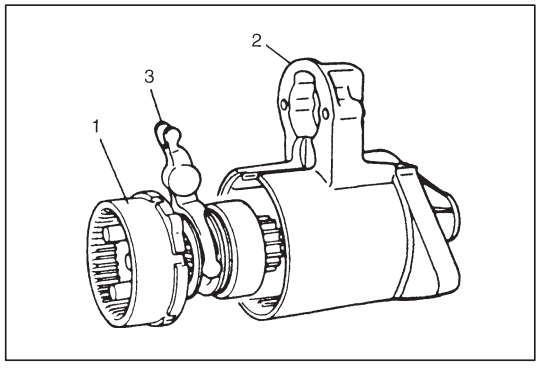

11) Insert shaft assembly (1) into front housing (2) with lever (3) positioned as shown.

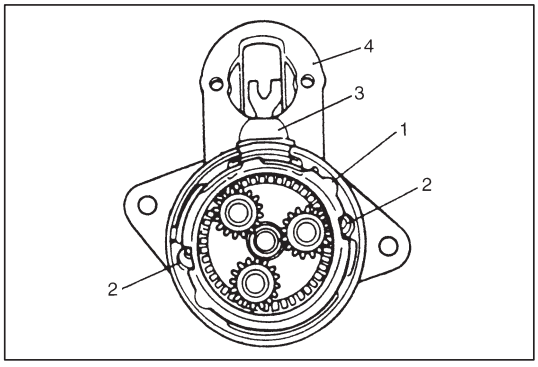

12) Install packing (1) so that cuts in packing align with bolt holes (2) for through bolts in front housing.
13) Install plate and seal rubber (3) to front housing (4).

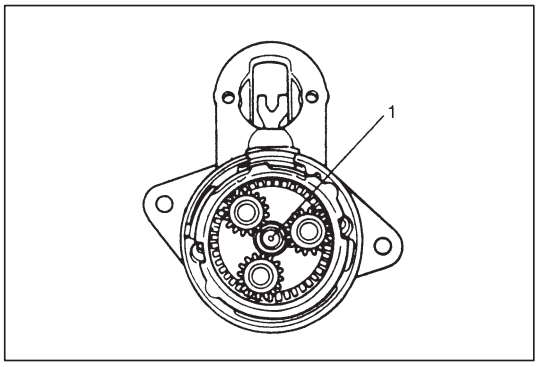

14) Apply grease to ball (1) and install ball into shaft hole.

Grease: 99000-25010

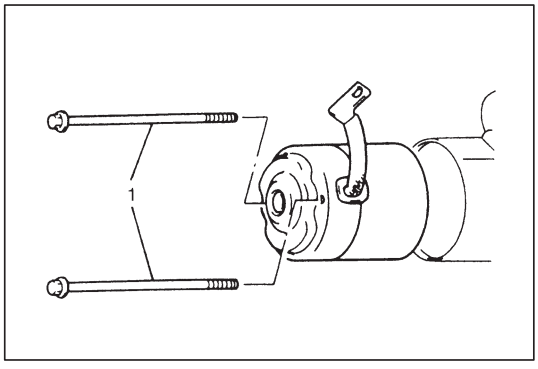

15) Install yoke, armature, brush holder and rear bracket to front housing by aligning match marks provided before removal.
16) Tighten through bolts (1).

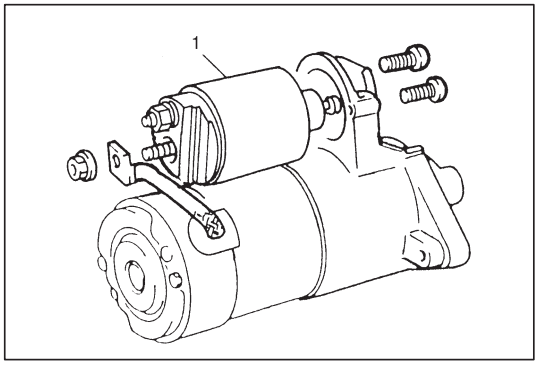

17) Install magnetic switch assembly (1) and connect wire (switch to motor) to switch terminal.
18) Upon completion of assembly, carry out PERFORMANCE TEST. (Refer to page 6G-15.)

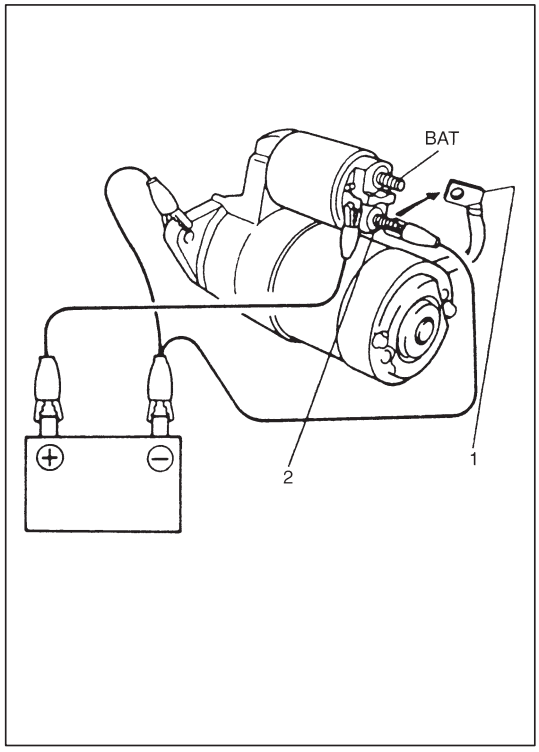

PERFORMANCE TEST

WARNING:
When performing the following test, be sure to connect the battery and the starting motor with a lead wire of the same size as the cable that was originally used there.

CAUTION:
Each test must be performed within 3 – 5 seconds to avoid coil from burning.

1) Pull-In Test

Disconnect lead wire (1) from terminal ‘M’ (2), and connect battery to magnetic switch as shown.
Check the plunger and pinion (over-running clutch) move outward.
If plunger and pinion (over-running clutch) don’t move, replace magnetic switch.

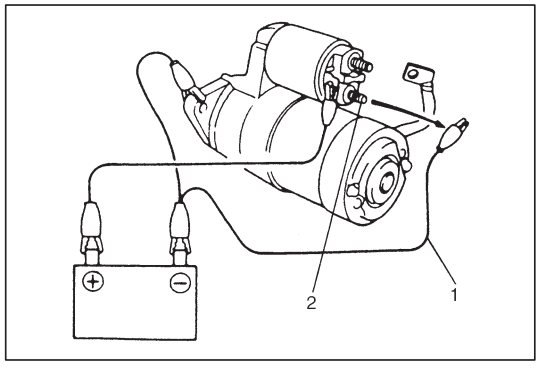

2) Hold-In Test

While connected as above with plunger out, disconnect negative lead (1) from terminal ‘M’ (2).
Check that plunger and pinion remain out.
If plunger and pinion return inward, replace magnetic switch.

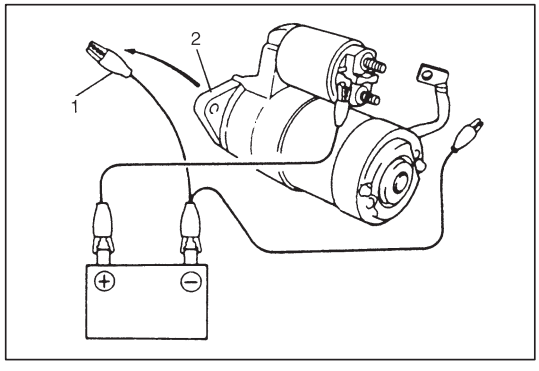

3) Plunger and Pinion Return Test

Disconnect negative lead (1) from starting motor body (2).
Check that plunger and pinion return inward.
If plunger and pinion don’t return, disassemble and inspect starting motor.

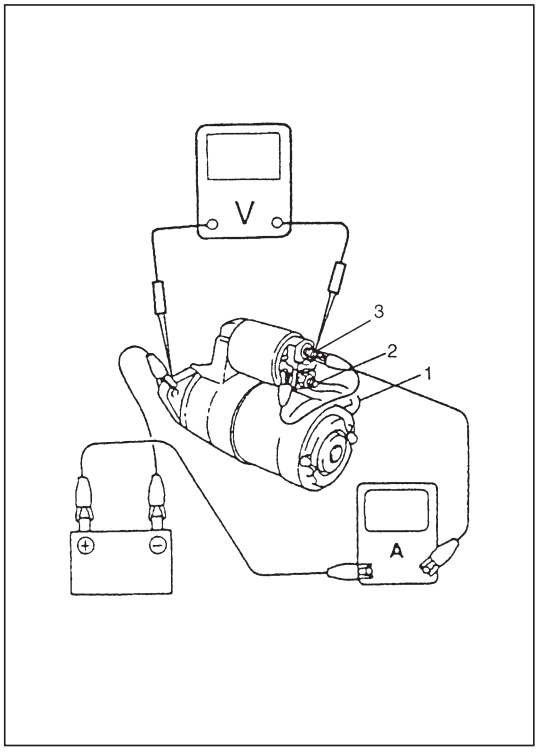

4) No-Load Performance Test

a) Connect motor lead wire (switch to motor) (1) to terminal ‘M‘ (2).

b) Connect battery and ammeter to starter as shown.

c) Check that starter rotates smoothly and steadily with pinion moving out. Check that ammeter indicates specified current.

Specified current: 90 A MAX. at 11 V (between terminal ‘B’ (3) and starter body)

SPECIFICATIONS

Voltage			12 volts
Output			1.2 kW
Rating			30 seconds
Direction of rotation			Clockwise as viewed from pinion side
Brush length			12.3 mm (0.44 in.)
Number of pinion teeth			8
Performance		Condition	Guarantee
Around at 20 °C (68 °F)	No load characteristic	11.0 V	90 A maximum 2,500 rpm minimum
	Load characteristic	7.5 V 300 A	10.5 N·m (1.05 kg-m, 7.59 lb-ft) minimum 880 rpm minimum
	Locked characteristic	4.0 V	760 A maximum 19.5 N·m (1.95 kg-m, 14.1 lb-ft) minimum
	Magnetic switch operating voltage		8 volts maximum

REQUIRED SERVICE MATERIAL

MATERIAL	RECOMMENDED SUZUKI PRODUCT	USE
Lithium grease	SUZUKI SUPER GREASE A (99000-25010)	● Front and rear bush ● Plunger ● Pinion drive lever ● Internal gear ● Planetary carrier shaft ● Planetary gear ● Ball ● Armature

SPECIAL TOOLS

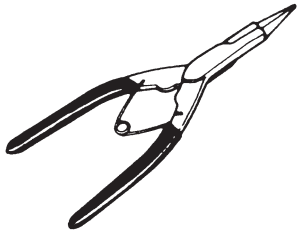 09900-06107 Snap ring pliers (Opening type)	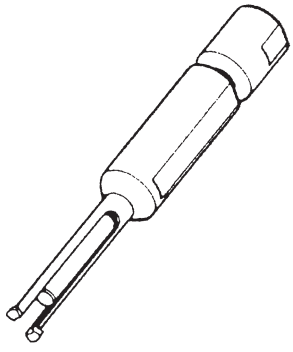 09921-20200 Bearing remover	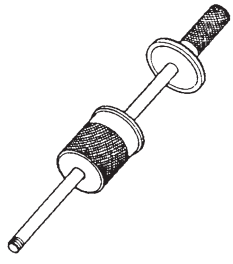 09930-30102 Sliding shaft

SECTION 6G1

CRANKING SYSTEM
(0.9 kW No-Reduction Type)

NOTE:
Starting motor vary depending on specifications, etc. Therefore, be sure to check model and specification of the vehicle being serviced before replacing parts.

CONTENTS

GENERAL DESCRIPTION

CRANKING CIRCUIT

The cranking circuit consists of the battery, starting motor, ignition switch, and related electrical wiring. These components are connected electrically as shown below.
Only the starting motor will be covered in this section.

STARTING MOTOR CIRCUIT

In the circuit shown in the following, the magnetic switch coils are magnetized when the ignition switch is closed. The resulting plunger and pinion drive lever movement causes the pinion to engage the engine flywheel gear and the magnetic switch main contacts to close, and cranking takes place.
When the engine starts, the pinion over-running clutch protects the armature from excessive speed until the switch is opened, at which time the return spring causes the pinion to disengage.

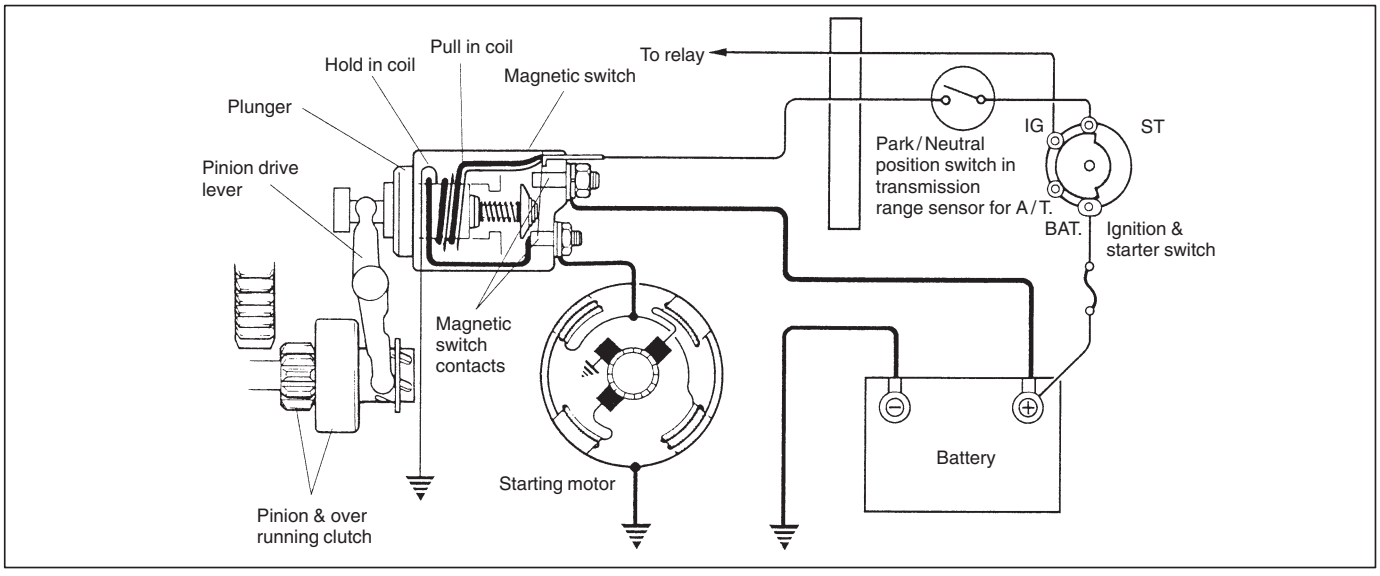

STARTING MOTOR

The starting motor consist of the following parts.

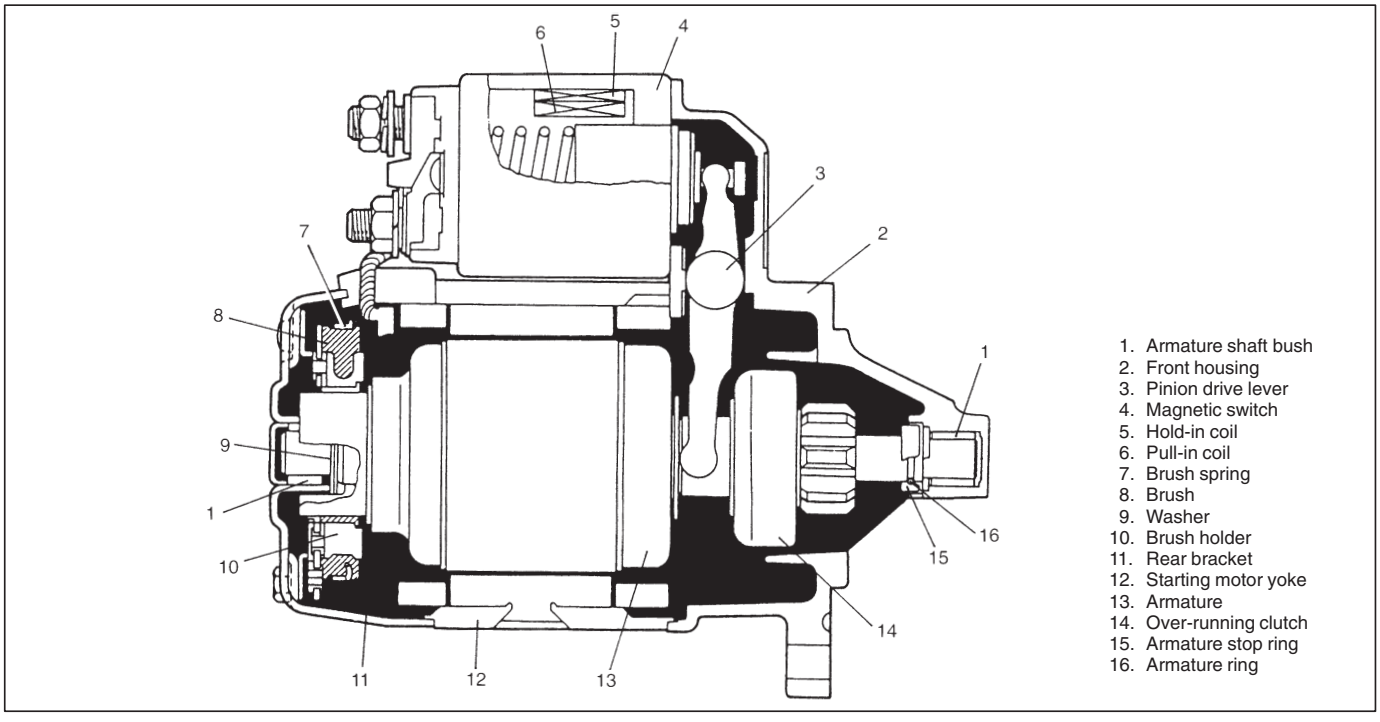

DIAGNOSIS

Possible symptoms due to starting system trouble would be as follows:

- Starting motor does not run (or runs slowly)
- Starting motor runs but fails to crank engine
- Abnormal noise is heard
- Starting motor does not stop running

Proper diagnosis must be made to determine exactly where the cause of each trouble lies ..... in battery, wiring harness, (including ignition and starter switch), starting motor or engine.

Do not remove motor just because starting motor does not run. Check the following items and narrow down scope of possible causes.
- Condition of trouble
- Tightness of battery terminals (including ground cable connection on engine side) and starting motor terminals
- Discharge of battery
- Mounting of starting motor

Condition	Possible Cause	Correction
Motor not running	**No operating sound of magnetic switch**	
	● Battery run down	Recharge battery.
	● Battery voltage too low due to battery deterioration	Replace battery.
	● Poor contact in battery terminal connection	Retighten or replace.
	● Loose grounding cable connection	Retighten.
	● Fuse set loose or blown off	Tighten or replace.
	● Poor contacting action of ignition switch and magnetic switch	Replace.
	● Lead wire coupler loose in place	Retighten.
	● Open-circuit between ignition switch and magnetic switch	Repair.
	● Open-circuit in pull-in coil	Replace magnetic switch.
	● Poor sliding of plunger and/or pinion	Repair.
	● Shift lever switch is not in P or N, or not adjusted (A/T)	Shift in P or N, or adjust switch.
	● Brushes are seating poorly or worn down	Repair or replace.
	Operating sound of magnetic switch heard	
	● Battery run down	Recharge battery.
	● Battery voltage too low due to battery deterioration	Replace battery.
	● Loose battery cable connections	Retighten.
	● Burnt main contact point, or poor contacting action of magnetic switch	Replace magnetic switch.
	● Brushes are seating poorly or worn down	Repair or replace.
	● Weakened brush spring	Replace.
	● Burnt commutator	Replace armature.
	● Grounding of field coil	Repair.
	● Layer short-circuit of armature	Replace.
	● Crankshaft rotation obstructed	Repair.

Condition	Possible Cause	Correction
Starting motor running but too slow (small torque)	**If battery and wiring are satisfactory, inspect starting motor**	
	● Insufficient contact of magnetic switch main contacts	Replace magnetic switch.
	● Layer short-circuit of armature	Replace.
	● Disconnected, burnt or worn commutator	Replace.
	● Grounding of field coil	Repair.
	● Worn brushes	Replace brush.
	● Weakened brush springs	Replace spring.
	● Burnt or abnormally worn end bush	Replace bush.
Starting motor running, but not cranking engine	● Worn pinion tip	Replace over-running clutch.
	● Poor sliding of over-running clutch	Repair.
	● Over-running clutch slipping	Replace over-running clutch.
	● Worn teeth of ring gear	Replace flywheel (M/T) or drive plate (A/T).
Noise	● Abnormally worn bush	Replace bush.
	● Worn pinion or worn teeth of ring gear	Replace over-running clutch or flywheel (M/T), drive plate (A/T).
	● Poor sliding of pinion (failure in return movement)	Repair or replace.
	● Lack of grease in each part	Lubricate.
Starting motor does not stop running	● Fused contact points of magnetic switch	Replace magnetic switch.
	● Short-circuit between turns of magnetic switch coil (layer short-circuit)	Replace magnetic switch.
	● Failure of returning action in ignition switch	Replace.

UNIT REPAIR OVERHAUL

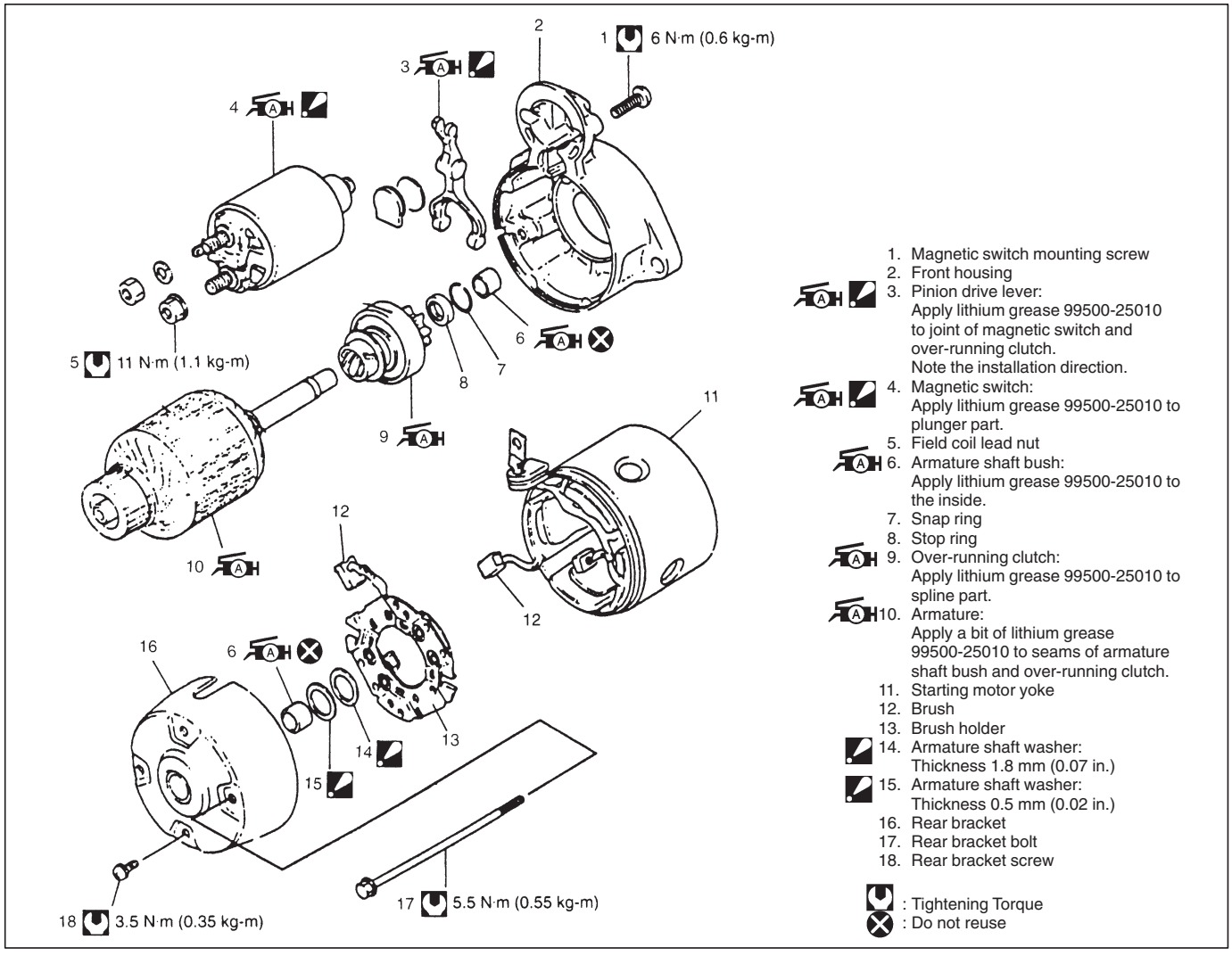

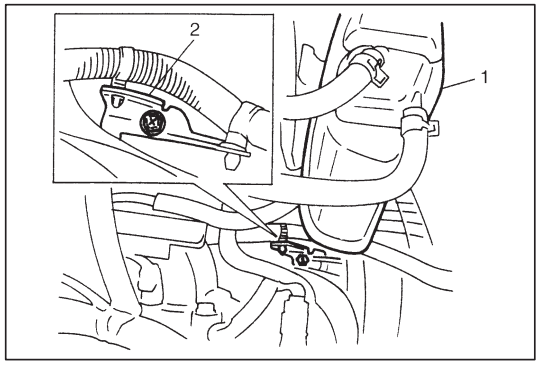

DISMOUNTING AND REMOUNTING

1) Disconnect positive (+) and negative (–) battery lead cables at battery.
2) Remove battery and battery tray.
3) Disconnect EVAP canister (1) and remove cable clamp (2).

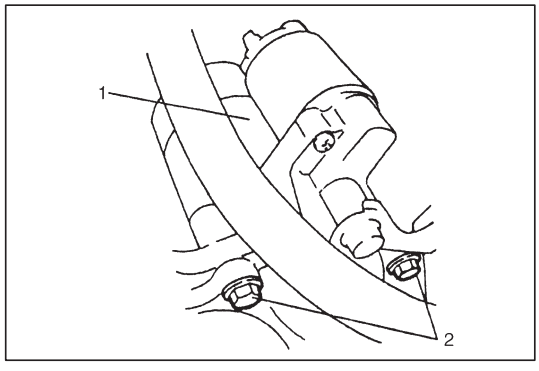

4) Disconnect magnetic switch lead wire and battery cable from starting motor (1).
5) Remove two starting motor mount bolts (2).
6) Remove starting motor.
7) To install, reverse the above procedure.

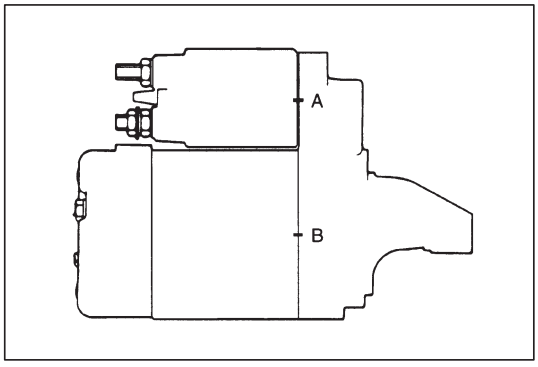

DISASSEMBLY

NOTE:

- **Before disassembling starting motor, be sure to put match marks at two locations (A and B) as shown in left figure so that any possible mistakes can be avoided.**
- **Do not clamp yoke in a vise or strike it with a hammer during disassembling and reassembling.**

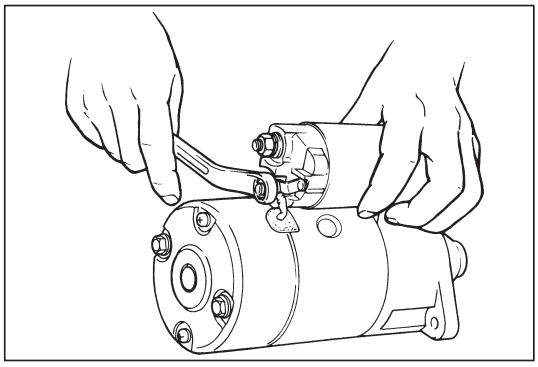

1) Remove nut securing the end of field coil lead to terminal on the head of magnetic switch.

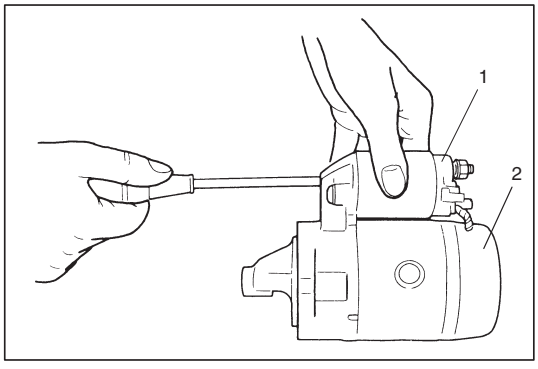

2) Take off magnetic switch (1) by removing 2 mounting screws.

   NOTE:
   Don't disassemble this switch. If defective, replace as a complete assembly.

3) Loosen 2 bolts and 2 screws to remove rear bracket (2).

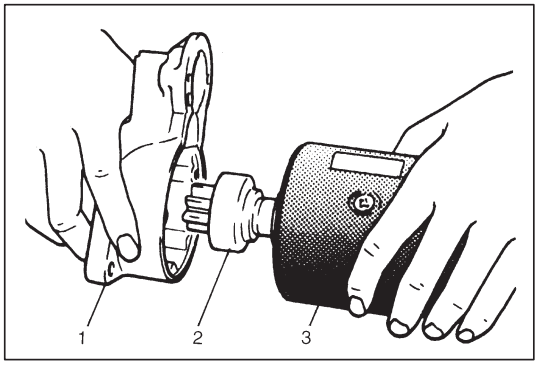

4) Separate front housing (1) and armature (2) from yoke (3).

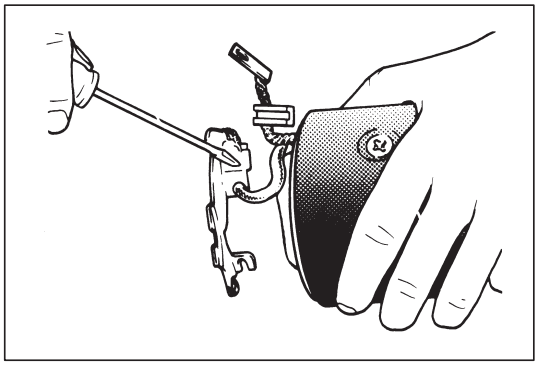

5) Draw brushes out of brush holder.

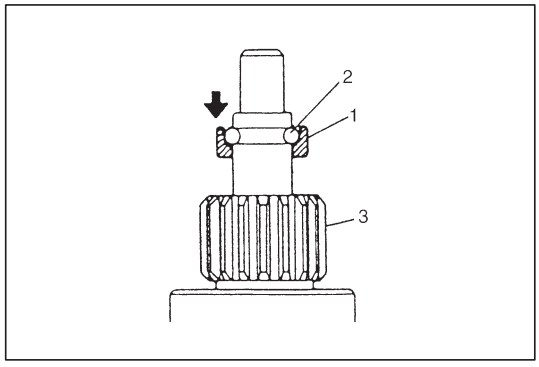

6) Loosen pinion stop ring (1) fixed by snap ring (2).
7) Remove snap ring, and then pull out pinion stop ring and over-running clutch (3).

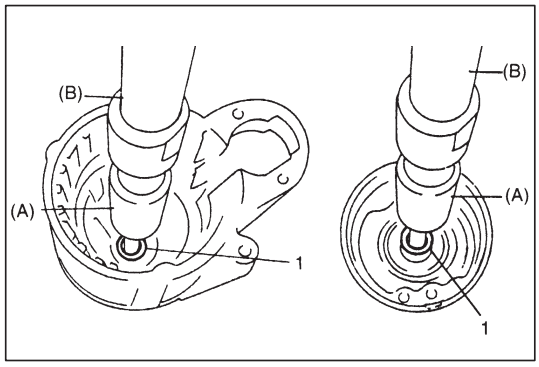

8) Remove armature shaft bushes (1) using special tools.

Special Tool
(A): 09921-20200
(B): 09930-30102

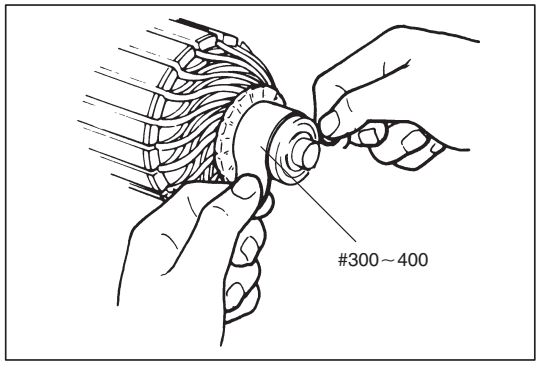

INSPECTION

ARMATURE

- Inspect commutator for dirt or burn. Correct with sandpaper or lathe, if necessary.

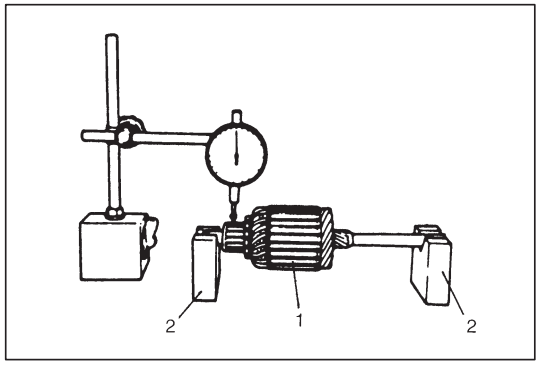

- Check commutator for uneven wear with armature (1) supported on V blocks (2). If deflection of dial gauge pointer exceeds limit, repair or replace.

NOTE:
Below specification presupposes that armature is free from bend. Bent shaft must be replaced.

Commutator out of round
Standard: 0.05 mm (0.0019 in.) or less
Limit: 0.4 mm (0.015 in.)

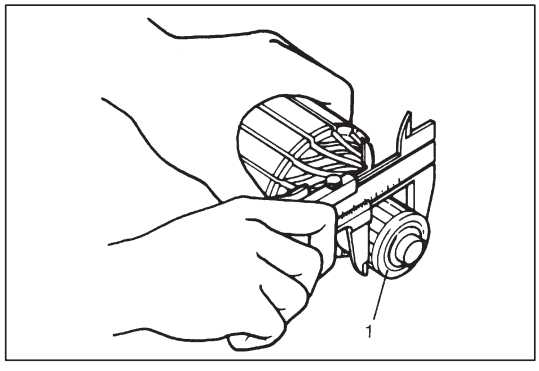

- Inspect commutator (1) for wear. If diameter is below limit, replace armature.

Commutator outside reference diameter
Standard: 32.0 mm (1.26 in.)
Limit: 31.4 mm (1.24 in.)

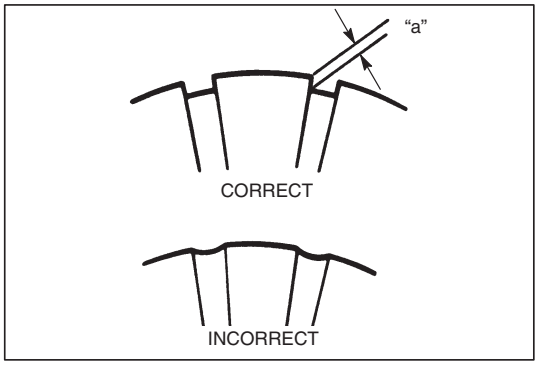

- Inspect commutator for wear or abnormal limit. Replace if necessary.

Commutator insulator reference depth "a"
Standard: 0.4 – 0.6 mm (0.015 – 0.023 in.)
Limit: 0.2 mm (0.0078 in.)

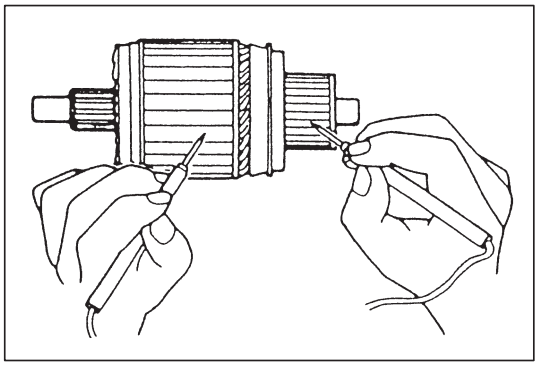

- **Ground test**
  Check commutator and armature core. If there is continuity, armature is grounded and must be replaced.

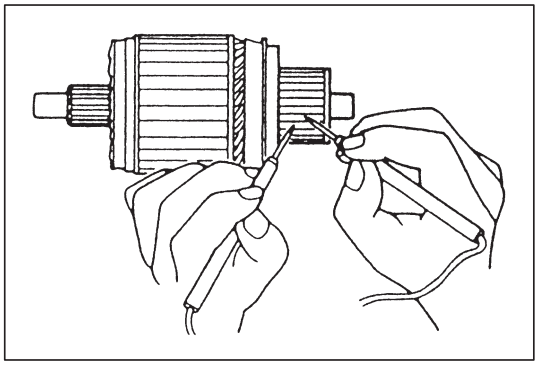

- **Open circuit test**
  Check for continuity between segments. If there is no continuity at any point, there is an open circuit and armature must be replaced.

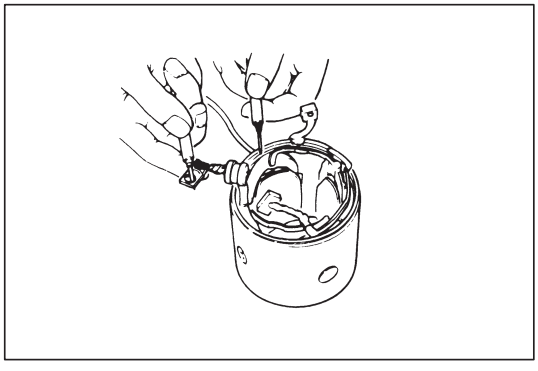

FIELD COIL

Ground test

Check continuity between brush and bare surface.
If there is continuity, field windings are grounded.
The yoke assembly must be replaced.

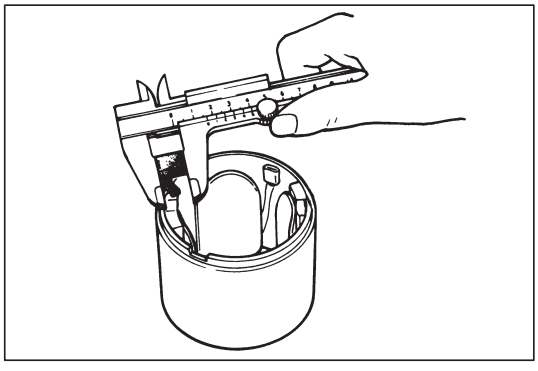

BRUSH

Check brushes for wear. If below limit, replace brush.

Brush length
Standard: 17.0 mm (0.67 in.)
Limit: 11.5 mm (0.45 in.)

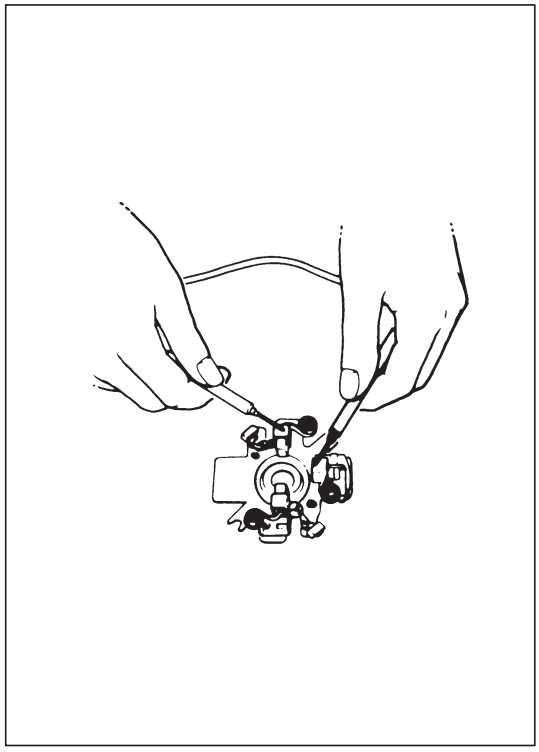

BRUSH HOLDER

Check movement of brush in brush holder. If brush movement within brush holder is sluggish, check brush holder for distortion and sliding faces for correct contamination.
Clean or correct as necessary.
Clean for continuity across insulated brush holder (positive side) and grounded brush holder (negative side).
If continuity exists, brush holder is grounded due to defective insulation and should be replaced.

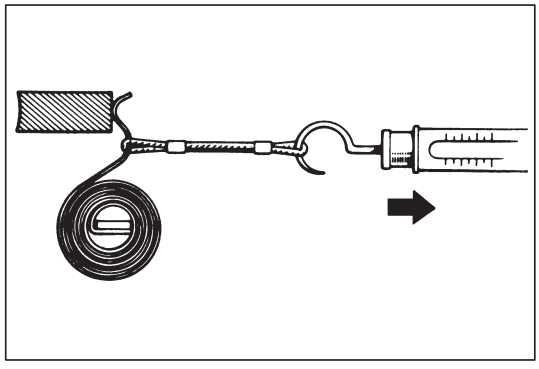

SPRING

Inspect brush spring for wear, damage or other abnormal conditions. Replace if necessary.

Brush spring tension

Standard: 1.95 kg (4.3 lb)
Limit: 0.9 kg (1.98 lb)

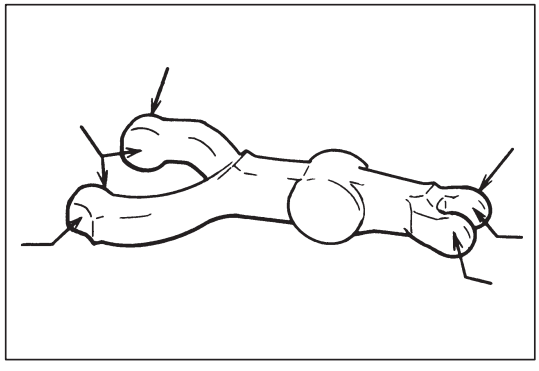

DRIVE LEVER

Inspect drive lever for wear. Replace if necessary.

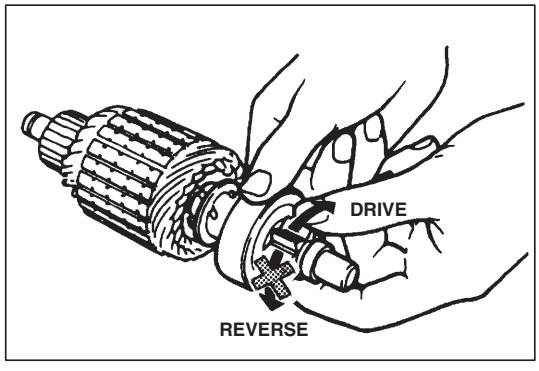

PINION AND OVER-RUNNING CLUTCH

- Inspect pinion for wear, damage or other abnormal conditions. Check that clutch locks up when turned in direction of drive and rotates smoothly in reverse direction. Replace if necessary.

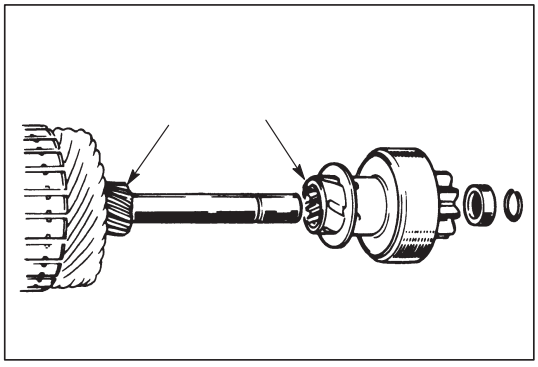

- Inspect spline teeth for wear or damage. Replace if necessary. Inspect pinion for smooth movement.

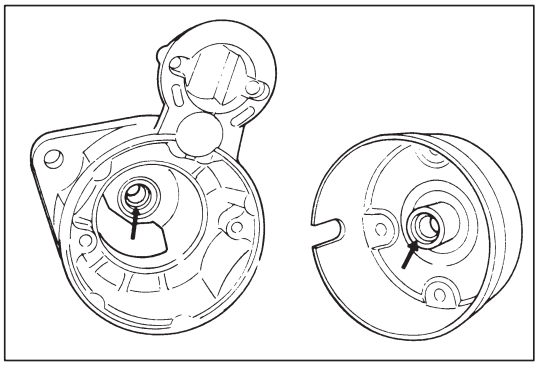

ARMATURE SHAFT BUSH

Inspect bushes for wear or damage. Replace if necessary.

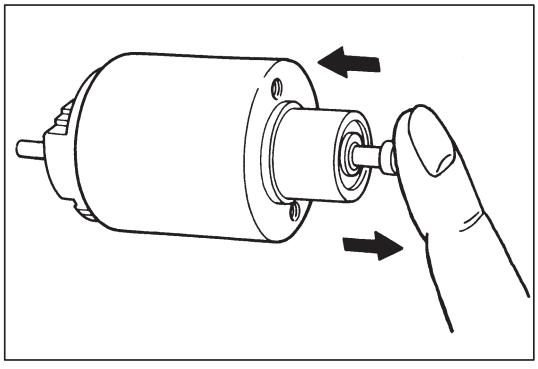

MAGNETIC SWITCH

Push in plunger and release it. Plunger should return quickly to its original position. Replace if necessary.

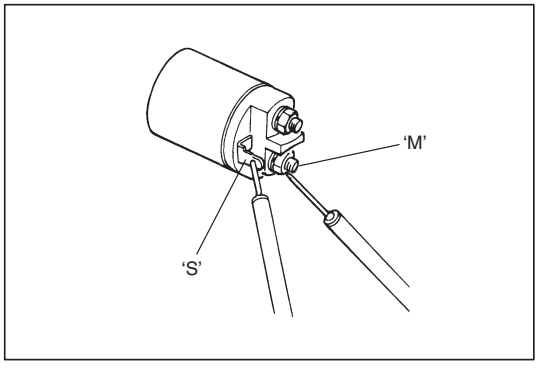

- **Pull-in coil open circuit test**

  Check for continuity across magnetic switch 'S' terminal and 'M' terminal. If no continuity exists, coil is open and should be replaced.

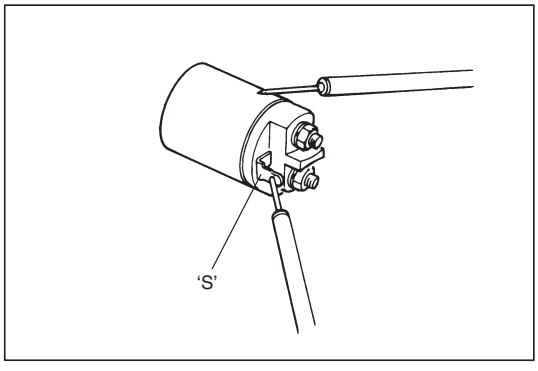

- **Hold-in coil open circuit test**

  Check for continuity across magnetic switch 'S' terminal and coil case. If no continuity exists, coil is open and should be replaced.

REASSEMBLY

Reverse disassembly procedure for reassembly noting the following.

- Apply grease to current part referring to figure in page 6G1-5.
- Install pinion drive lever into drive housing referring to page 6G1-5 especially for its direction.
- Do not reuse armature shaft bushes. If replacement, install new ones.
- Tighten bolts and nuts to specified torque referring to page 6G1-5.
- Pay attention to an installation location of armature shaft washers referring to page 6G1-5.
- Upon completion of assembly, carry out “PERFORMANCE TEST” in this section.
- Tighten battery cable nut to specified torque.

Tightening Torque
11 N·m (1.1 kg-m, 8.0 lb-ft)

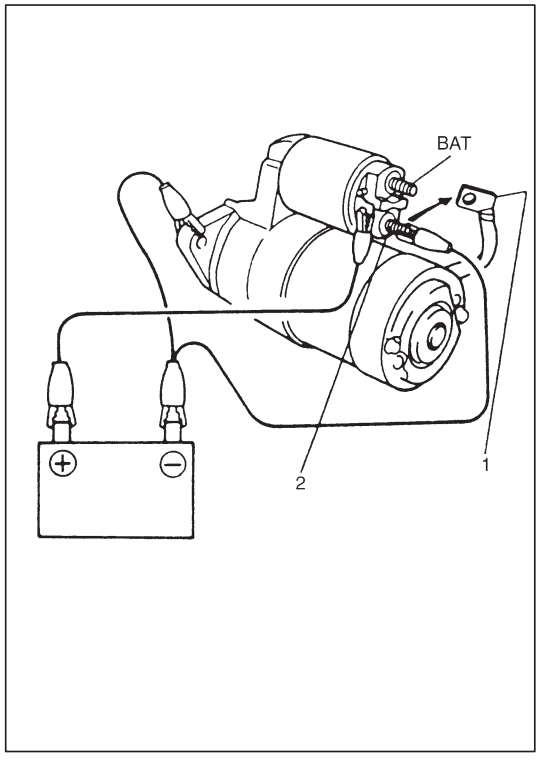

PERFORMANCE TEST

WARNING:
When performing the following test, be sure to connect the battery and the starting motor with a lead wire of the same size as the cable that was originally used there.

CAUTION:
Each test must be performed within 3 – 5 seconds to avoid coil from burning.

1) Pull-In Test

Disconnect lead wire (1) from terminal ‘M’ (2), and connect battery to magnetic switch as shown.
Check the plunger and pinion (over-running clutch) move outward.
If plunger and pinion (over-running clutch) don’t move, replace magnetic switch.

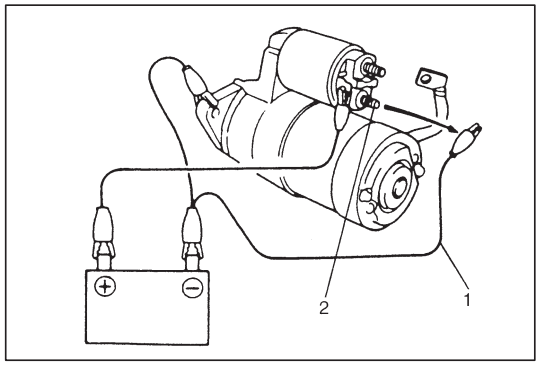

2) Hold-In Test

While connected as above with plunger out, disconnect negative lead (1) from terminal ‘M’ (2).
Check that plunger and pinion remain out.
If plunger and pinion return inward, replace magnetic switch.

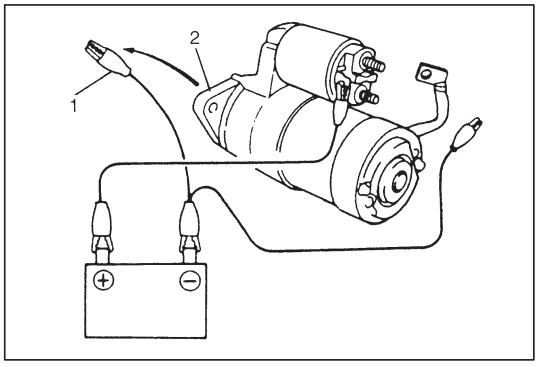

3) Plunger and Pinion Return Test

Disconnect negative lead (1) from switch body (2).
Check that plunger and pinion return inward.
If plunger and pinion don't return, disassemble and inspect starting motor.

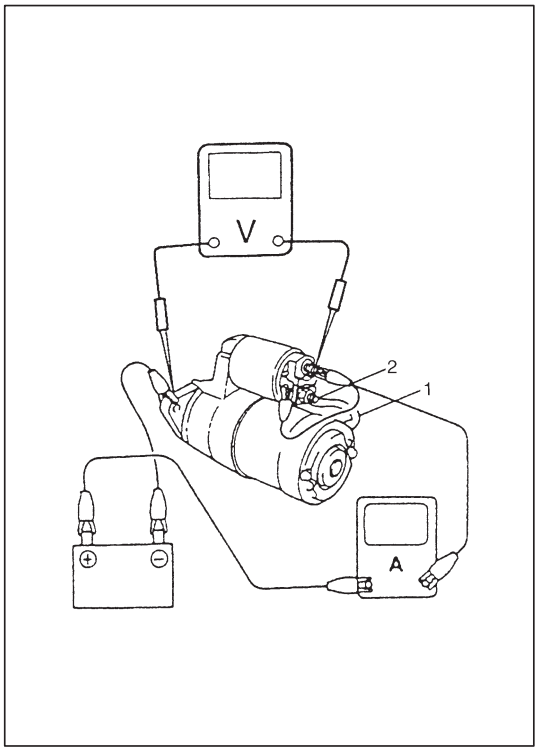

4) No-Load Performance Test

a) Connect motor lead wire (switch to motor) (1) to terminal 'M' (2).
b) Connect battery and ammeter to starter as shown.
c) Check that starter rotates smoothly and steadily with pinion moving out. Check that ammeter indicates specified current.

Specified current: Less than 53 A MAX at 11.5 V (between terminal 'B' and starter body)

SPECIFICATIONS

Voltage			12 volts
Output			0.8 kW
Rating			30 seconds
Direction of rotation			Clockwise as viewed from pinion side
Brush length			17.0 mm (0.67 in.)
Number of pinion teeth			8
Performance		Condition	Guarantee
Around at 20°C (68°F)	No load characteristic	11.5V	53 A maximum 6000 rpm minimum
	Load characteristic	9 V 150 A	2.8 N·m (0.28 kg-m, 2.0 lb-ft) minimum 2000 rpm minimum
	Locked characteristic	5 V	360 A maximum 6.86 N·m (0.7 kg-m, 5.1 lb-ft) minimum
	Magnetic switch operating voltage		8 volts maximum

REQUIRED SERVICE MATERIAL

MATERIAL	RECOMMENDED SUZUKI PRODUCT	USE
Lithium grease	SUZUKI SUPER GREASE A (99000-25010)	● Armature shaft. ● Over-running clutch. ● Armature shaft bushes. ● Drive lever.

SPECIAL TOOLS

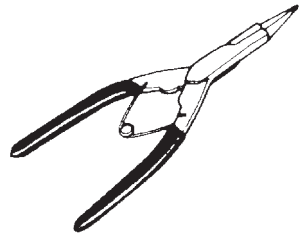 09900-06107 Snap ring pliers (Opening type)	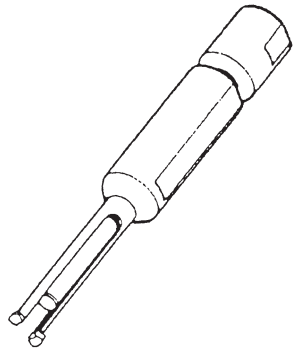 09921-20200 Bearing remover	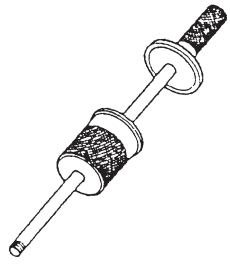 09930-30102 Sliding shaft

SECTION 6H

CHARGING SYSTEM

CONTENTS

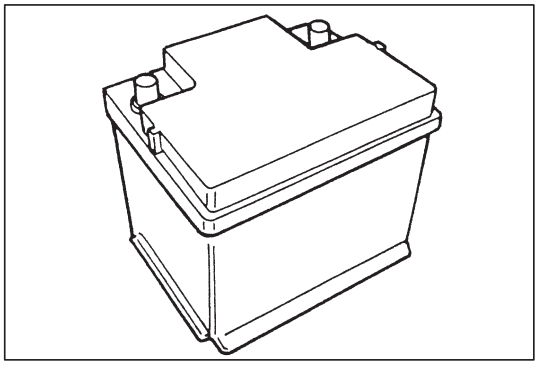

BATTERY

GENERAL DESCRIPTION

The battery has three major functions in the electrical system.
- It is a source of electrical energy for cranking the engine.
- It acts as a voltage stabilizer for the electrical system.
- It can, for a limited time, provide energy when the electrical load exceeds the output of the generator.

CARRIER AND HOLD-DOWN

The battery carrier should be in good condition so that it will support the battery securely and keep it level.
Before installing the battery, the battery carrier and hold-down clamp should be clean and free from corrosion and make certain there are no parts in carrier.
To prevent the battery from shaking in its carrier, the hold-down bolts should be tight enough but not over-tightened.

ELECTROLYTE FREEZING

The freezing point of electrolyte depends on its specific gravity. Since freezing may ruin a battery, it should be protected against freezing by keeping it in a fully charged condition. If a battery is frozen accidentally, it should not be charged until it is warmed.

SULFATION

If the battery is allowed to stand for a long period in discharged condition, the lead sulfate becomes converted into a hard, crystalline substance, which will not easily turn back to the active material again during the subsequent recharging. “Sulfation” means the result as well as the process of that reaction.
Such a battery can be revived by very slow charging and may be restored to usable condition but its capacity is lower than before.

CARE OF BATTERY

WARNING:
- **Never expose battery to open flame or electric spark because of battery generate gas which is flammable and explosive.**
- **Do not allow battery fluid to contact eyes, skin, fabrics, or painted surfaces as fluid is a corrosive acid. Flush any contacted area with water immediately and thoroughly.**
- **Batteries should always be kept out of reach of children.**

1) The battery is a very reliable component, but needs periodical attentions.
   - Keep the battery carrier clean
   - Prevent rust formation on the terminal posts
   - Keep the electrolyte up to the upper level uniformly in all cells.

   When keeping battery on vehicle over a long period of time, follow instructions given below.
   - Weekly, start the engine and run it until it reaches normal operating temperature with engine speed of 2000 to 3000 rpm. Make sure all electric switches are off before storing the vehicle.
   - Recharge the battery twice a month to prevent it from discharging excessively. This is especially important when ambient temperature is low.
     The battery discharges even when it is not used, while vehicles are being stored. Battery electrolyte can freeze and battery case can crack at cold ambient condition if battery is not properly charged.

2) Keep the battery cable connections clean.
   The cable connections, particularly at the positive (+) terminal post, tend to become corroded. The product of corrosion, or rust, on the mating faces of conductors resists the flow of current.
   Clean the terminals and fittings periodically to ensure good metal-to-metal contact, and grease the connections after each cleaning to protect them against rusting.

3) Be always in the know as to the state of charge of the battery.
   The simplest way to tell the state of charge is to carry out a hydrometer test. The hydrometer is an instrument for measuring the specific gravity of the battery electrolyte. The specific gravity of the electrolyte is indicative of the state of charge. Refer to “DIAGNOSIS” of BATTERY in this section.

DIAGNOSIS

COMMON CAUSES OF FAILURE

A battery is not designed to last indefinitely; however, with proper care, it will provide many years of service. If the battery performs satisfactorily during test but fails to operate properly for no apparent reason, the following are some factors that may point to the cause of trouble:

- Accessories left on overnight or for an extended period without the generator operating.
- Slow average driving speeds for short periods.
- Electrical load exceeding generator output particularly with addition of aftermarket equipment.
- Defects in charging system such as high resistance, slipping drive belt, loose generator output terminal, faulty generator or voltage regulator. Refer to “GENERATOR” in this “DIAGNOSIS” section.
- Battery abuse, including failure to keep battery cable terminals clean and tight or loose battery hold down.
- Mechanical problems in electrical system such as shorted or pinched wires.

VISUAL INSPECTION

Check for obvious damage, such as cracked or broken case or cover, that could permit loss of electrolyte. If obvious damage is noted, replace battery. Determine cause of damage and correct as needed.

HYDROMETER TEST

The direct method of checking the battery for state of charge is to carry out a high rate discharge test, which involves a special precise voltmeter and an expensive instrument used in the service shops, but not recommendable to the user of the vehicle.

At 20°C of battery temperature (electrolyte temperature):

– The battery is in FULLY CHARGED STATE if the electrolyte specific gravity is 1.280.

– The battery is in HALF CHARGED STATE if the specific gravity is 1.220.

– The battery is in NEARLY DISCHARGED STATE if the specific gravity is 1.150 and is in danger of freezing.

As the specific gravity varies with the temperature, if battery temperature is not at 20°C (68°F), you have to correct your specific gravity reading (taken with your hydrometer) to the value at 20°C (68°F) and apply the corrected specific gravity value to the three-point guide stated value.

For the manner of correction, refer to the graph showing the relation between specific gravity value and temperature at the left.

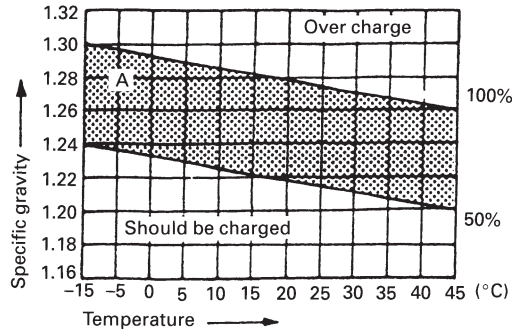

HOW TO USE THE TEMPERATURE-CORRECTED STATE-OF-CHARGE GRAPH

Suppose your specific gravity reading is 1.28 and the battery temperature is –5°C (23°F). Locate the intersection of the –5°C line and the 1.28 specific gravity line.

The intersection is within the “A” zone (shaded area in the graph) and that means CHARGED STATE.

To know how much the battery is charged, draw a line parallel to the zone demarcation line and extend it to the right till it meets with the percentage scale. In the present example, the line meets at about 85% point on the percentage scale. Therefore, the battery is charged up to the 85% level.

UNIT REPAIR OVERHAUL

JUMP STARTING IN CASE OF EMERGENCY WITH AUXILIARY (BOOSTER) BATTERY

CAUTION:
If vehicle is manual transmission model and has a catalytic converter, do not push or tow it to start. Damage to its emission system and/or to other parts may result.

Both booster and discharged battery should be treated carefully when using jumper cables. Follow procedure outlined below, being careful not to cause sparks.

WARNING:
- **Departure from these conditions or procedure described below could result in:**
  - **i) Serious personal injury (particularly to eyes) or property damage from such causes as battery explosion, battery acid, or electrical burns.**
  - **ii) Damage to electronic components of either vehicle.**
- **Remove rings, watches, and other jewelry. Wear approved eye protection.**
- **Be careful so that metal tools or jumper cables do not contact positive battery terminal (or metal in contact with it) and any other metal on vehicle, because a short circuit could occur.**

1) Set parking brake and place automatic transmission in PARK (NEUTRAL on manual transmission). Turn off ignition, turn off lights and all other electrical loads.
2) Check electrolyte level. If it is below low level line, add distilled water.
3) Attach end of one jumper cable to positive terminal of booster battery and the other end of the same cable to positive terminal of discharged battery (Use 12-volt battery only to jump start engine).
4) Attach one end of the remaining negative cable to negative terminal of booster battery, and the other end to a solid engine ground (such as exhaust manifold) at least 45 cm (18 in.) away from battery of vehicle being started.

   WARNING:
   Do not connect negative cable directly to negative terminal of dead battery.

5) Start engine of vehicle with booster battery and turn off electrical accessories. Then Start engine of the vehicle with discharged battery.
6) Disconnect jumper cables in the exact reverse order.

WITH CHARGING EQUIPMENT

CAUTION:
When jump starting engine with charging equipment, be sure equipment used is 12-volt and negative ground. Do not use 24-volt charging equipment. Using such equipment can cause serious damage to electrical system or electronic parts.

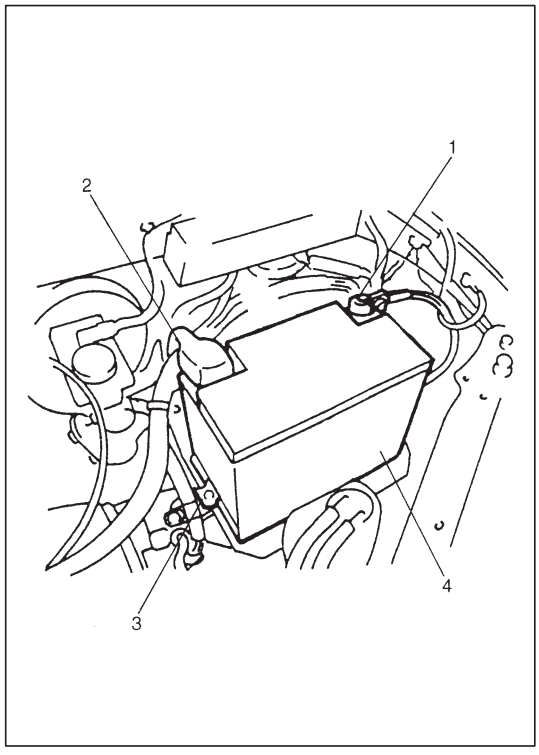

REMOVAL

1) Disconnect negative cable (1).
2) Disconnect positive cable (2).
3) Remove battery band (3).
4) Remove battery (4).

HANDLING

When handling battery, the following safety precautions should be followed:

- Hydrogen gas is produced by battery. A flame or spark near battery may cause the gas to ignite.
- Battery fluid is highly acidic. Avoid spilling on clothing or other fabric. Any spilled electrolyte should be flushed with large quantity of water and cleaned immediately.

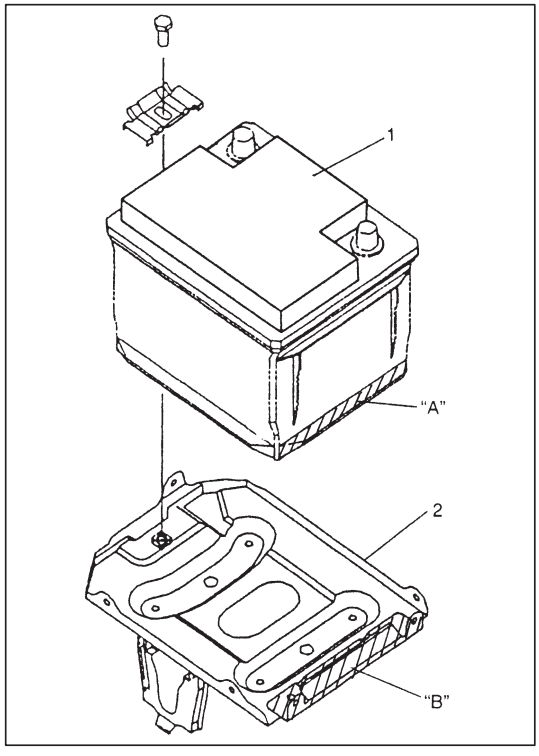

INSTALLATION

Reverse removal procedure for installation, and then note the following instruction.

- Install battery (1) to battery tray (2), and then fit "A" to "B" exactly.
- Torque battery positive (+) and negative (–) cable terminal nuts to specification.

Tightening Torque
8.0 N·m (0.8 kg-m, 6.0 lb-ft)

NOTE:
Check to be sure that ground cable has enough clearance to hood panel by terminal.

GENERATOR

GENERAL DESCRIPTION

The generator is a small and high performance type with an IC regulator incorporated.
The internal components are connected electrically as shown.

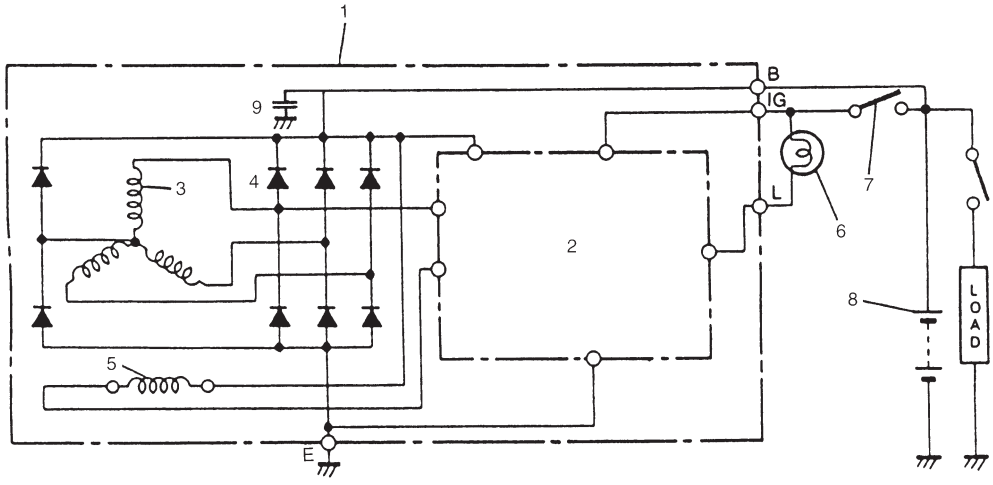

1. Generator with regulator assembly
2. I.C. regulator
3. Stator coil
4. Diode
5. Field coil (rotor coil)
6. Charge indicator light
7. Ignition switch
8. Battery
9. Condenser

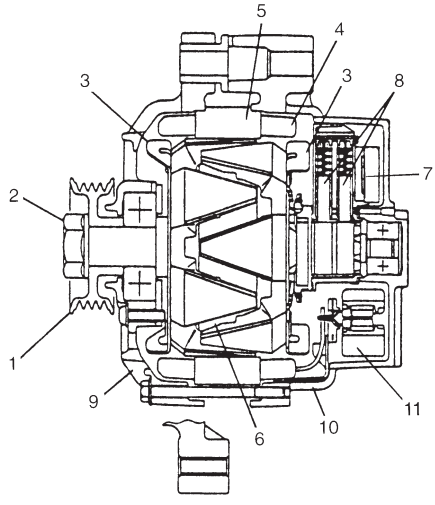

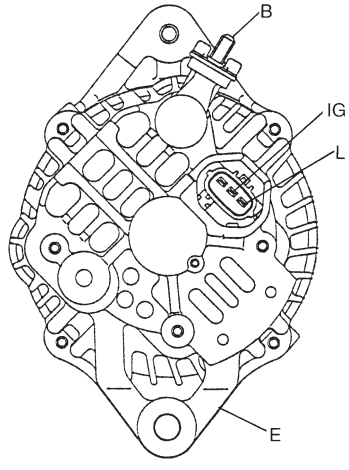

1. Pulley
2. Pulley nut
3. Rotor fan
4. Stator coil
5. Stator core
6. Field coil
7. Regulator
8. Brush
9. Front housing
10. Rear housing
11. Rectifier

B : Generator output (Battery terminal)
E : Ground
IG : Ignition terminal
L : Lamp terminal

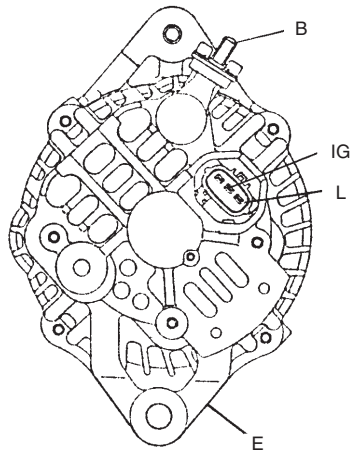

B : Generator output (Battery terminal)
E : Ground
IG : Ignition terminal
L : Lamp terminal

DIAGNOSIS

CAUTION:
- **Do not mistake polarities of IG terminal and L terminal.**
- **Do not create a short circuit between IG and L terminals. Always connect these terminals through a lamp.**
- **Do not connect any load between L and E.**
- **When connecting a charger or a booster battery to vehicle battery, refer to this section describing battery charging.**

Trouble in charging system will show up as one or more of the following conditions:
1) Faulty indicator lamp operation.
2) An undercharged battery as evidenced by slow cranking or indicator dark.
3) An overcharged battery as evidenced by excessive spewing of electrolyte from vents.

Noise from generator may be caused by a loose drive pulley, loose mounting bolts, worn or dirty bearings, defective diode, or defective stator.

FAULTY INDICATOR LAMP OPERATION

PROBLEM	POSSIBLE CAUSE	CORRECTION
Charge light does not light with ignition ON and engine off	● Fuse blown ● Light burned out ● Wiring connection loose ● IC regulator	Check fuse. Replace light. Tighten loose connection. Check generator.
Charge light does not go out with engine running (battery requires frequent recharging)	● Drive belt loose or worn ● IC regulator or generator faulty ● Wiring faulty	Adjust or replace drive belt. Check charging system. Repair wiring.
Noise from radio	Condenser faulty	Replace IC regulator assembly.

UNDERCHARGED BATTERY

This condition, as evidenced by slow cranking or indicator clear with red dot can be caused by one or more of the following conditions even though indicator lamp may be operating normal.
The following procedure also applies to cars with voltmeter and ammeter.

1) Make sure that undercharged condition has not been caused by accessories left on for extended period of time.
2) Check drive belt for proper tension.
3) If battery defect is suspected referring to BATTERY section.
4) Inspect wiring for defects. Check all connections for tightness and cleanliness, battery cable connections at battery, starting motor and ignition ground cable.
5) Connect voltmeter and ammeter as shown.

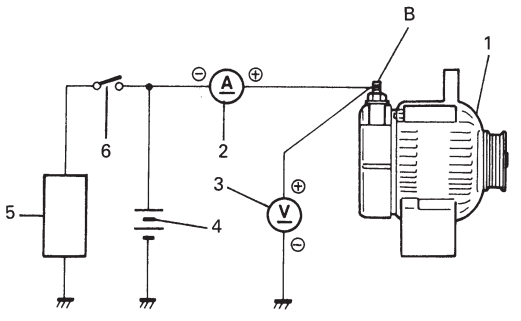

1. Generator
2. Ammeter
3. Voltmeter
4. Battery
5. Load
6. Switch

Voltmeter
Set between generator B terminal and ground.

Ammeter
Set between generator B terminal and battery (+) terminal.

NOTE:
Use fully charged battery.

6) Measure current and voltage.

NO-LOAD CHECK

Run engine from idling up to 2,000 rpm and read meters.

NOTE:
Turn off switches of all accessories (wiper, heater etc.).

Standard current	10 A maximum
Standard voltage	14.4 – 15.0 V at 20°C (68°F)

NOTE:
Consideration should be taken that voltage will differ somewhat with regulator case temperature as shown in left figure.

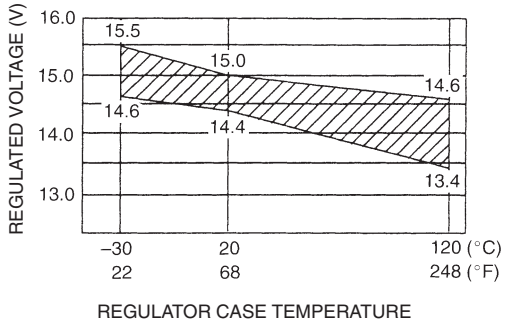

Higher Voltage

If voltage is higher than standard value, check ground of brushes. If brushes are not grounded, replace IC regulator.

Lower Voltage

If voltage is below or in standard value, increase engine speed up to 2000 – 2500 rpm soon after starting engine, and read maximum value on ammeter immediately.
If current is less than 49 A, repair or replace generator.

LOAD CHECK

1) Run engine at 2,000 rpm and turn on head light and heater motor.
2) Measure current and if it is less than 20 A repair or replace generator.

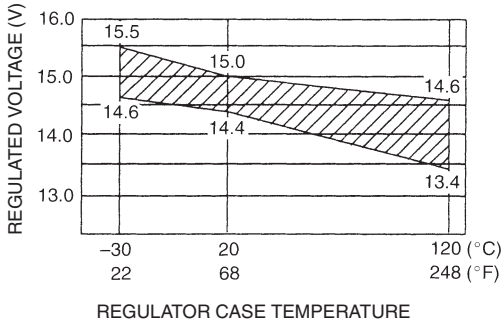

OVERCHARGED BATTERY

1) To determine battery condition, refer to BATTERY section.
2) If obvious overcharge condition exists as evidenced by excessive spewing of electrolyte, measure generator B terminal voltage at engine 2,000 rpm.
3) If measured voltage is higher than upper limit value, proceed to disassembly section of generator service.
4) Check ground of brushes. If brushes are not grounded, replace IC regulator. Then check field coil for grounds and shorts, referring to “INSPECTION” section.

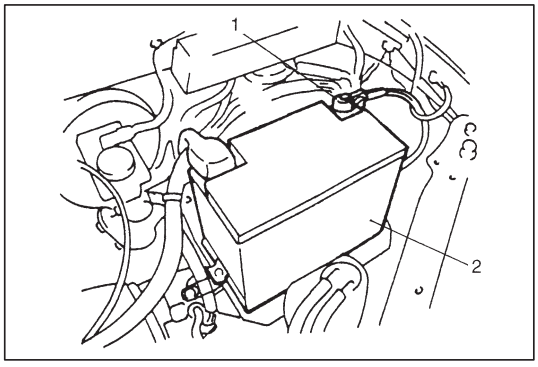

UNIT REPEIR OVERHAUL

REMOVAL

1) Disconnect negative (–) cable (1) at battery (2).

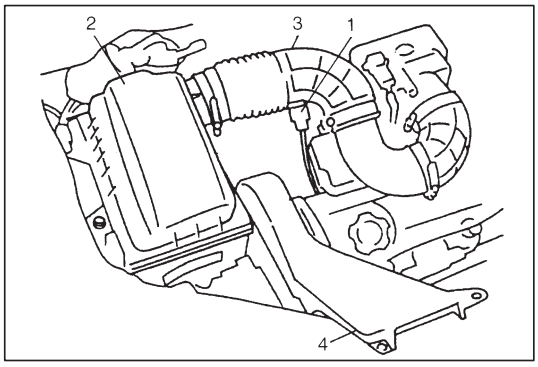

2) Disconnect IAT sensor coupler (1).
3) Remove air cleaner assembly (2) with air cleaner outlet No.1 hose (3) and suction pipe (4).
4) Remove generator cover.

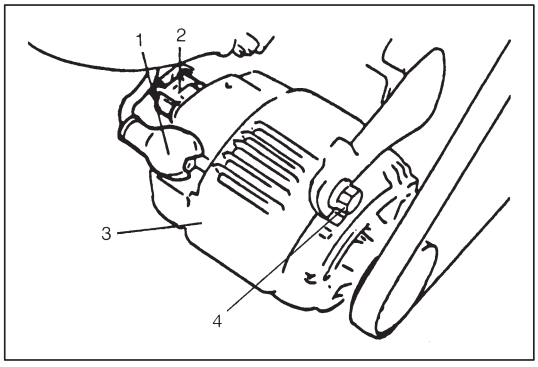

5) Disconnect “B” terminal wire (1) and coupler (2) from generator (3).
6) Remove upper generator bolt (4).
7) Hoist vehicle.

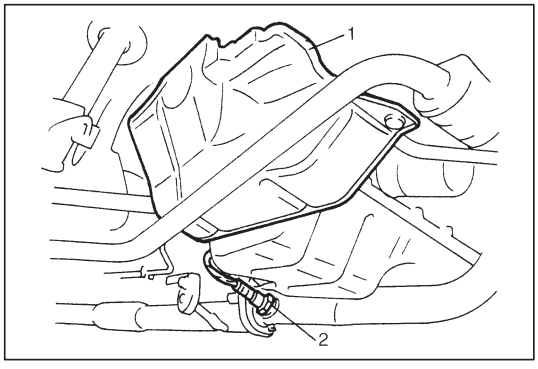

8) Remove left side of engine under cover (1) and oxygen sensor No.2 (2).

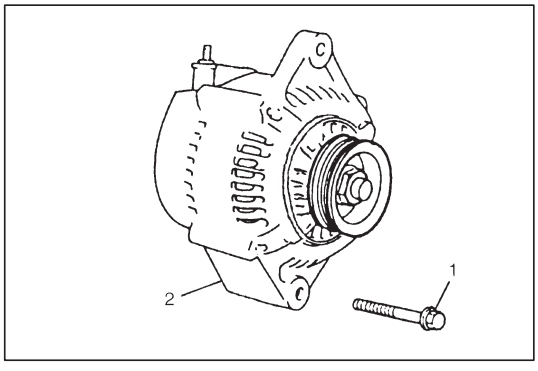

9) Remove generator belt referring to SECTION 6B.
10) Remove lower generator bolt (1), and then remove generator (2).

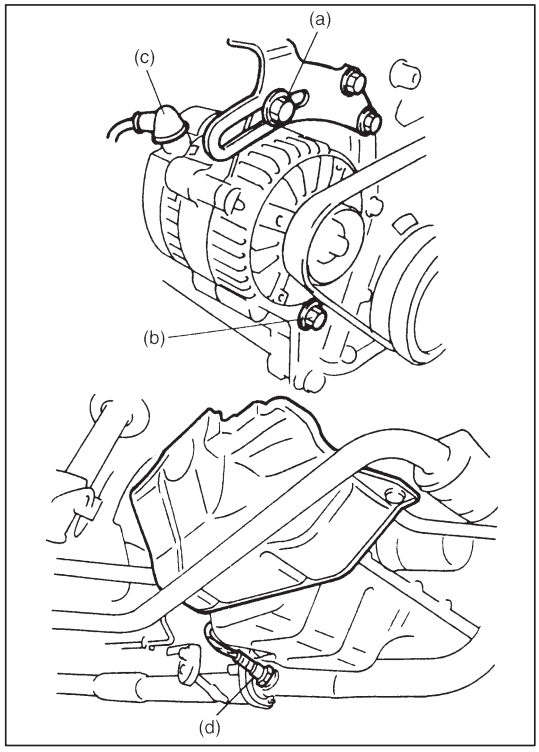

INSTALLATION

Reverse removal procedure and giving specified tension to water pump and generator drive belt referring to SECTION 6B.

Tightening Torque

(a): 22 N·m (2.2 kg-m, 16.0 lb-ft)
(b): 50 N·m (5.0 kg-m, 36.5 lb-ft)
(c): 7.8 N·m (0.78 kg-m, 5.5 lb-ft)
(d): 45 N·m (4.5 kg-m, 32.5 lb-ft)

DISASSEMBLY

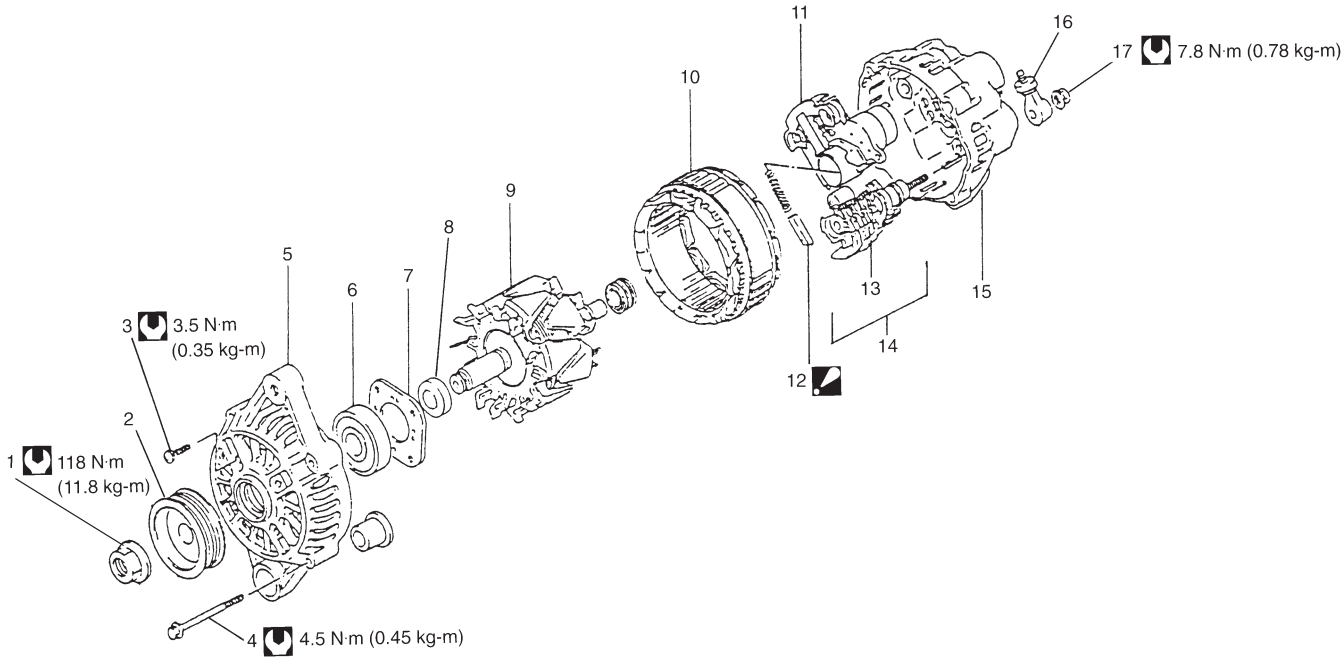

1. Pulley nut
2. Pulley
3. Bolt
4. Bolt
5. Front housing
6. Bearing
7. Retainer
8. Spacer
9. Rotor
10. Stator
11. IC regulator
12. Brush: Note the installing direction, and the detail refer to page 6H-19.
13. Rectifier
14. IC regulator assembly
15. Rear housing
16. "B" terminal
17. "B" terminal nut

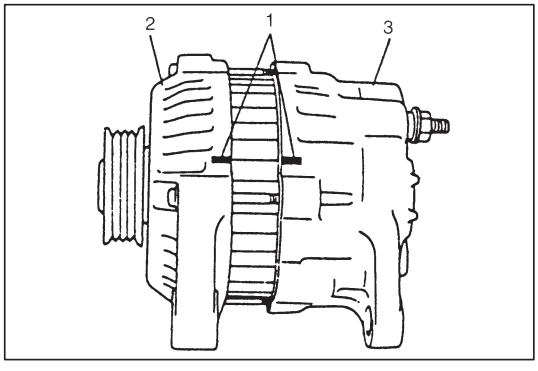

1) For easier reinstallation, provide match marks (1) on front housing (2) and rear housing (3) as shown before separating them.

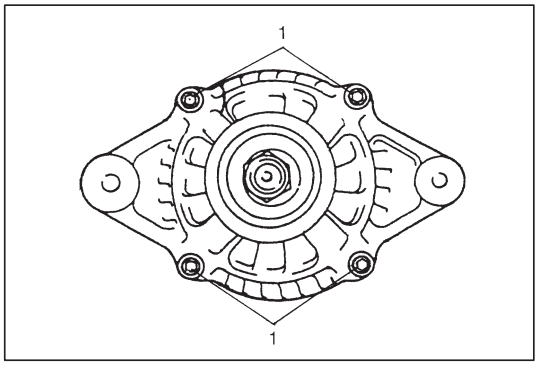

2) Remove housing bolts (1) from generator.

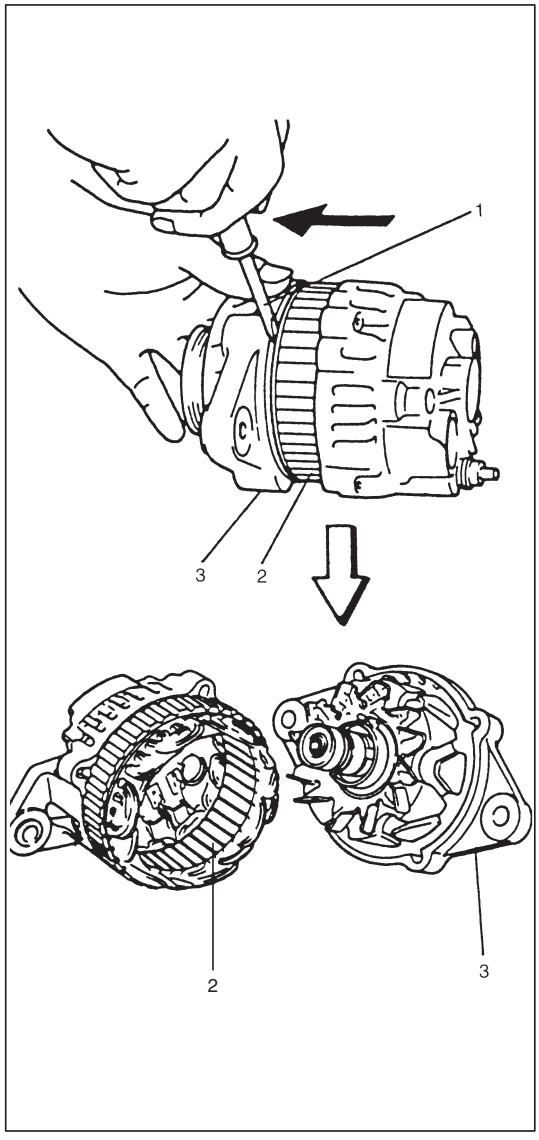

3) Insert flat tip screwdriver (1) between stator core (2) and front housing (3), and then separate generator into front and rear sides.

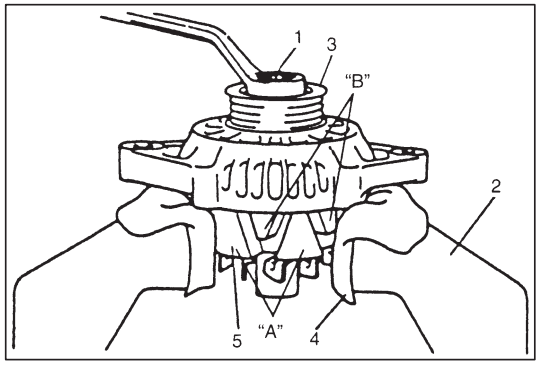

4) Loosen pulley nut (1) using vise (2) and take off pulley (3).

NOTE:
- **When using vise, put clean cloth (4) between rotor (5) and vise so as not to cause damage to rotor.**
- **Be sure to hold the location "A". Do not hold the location "B" as it does not have enough structural strength.**

5) Remove rotor from front housing.

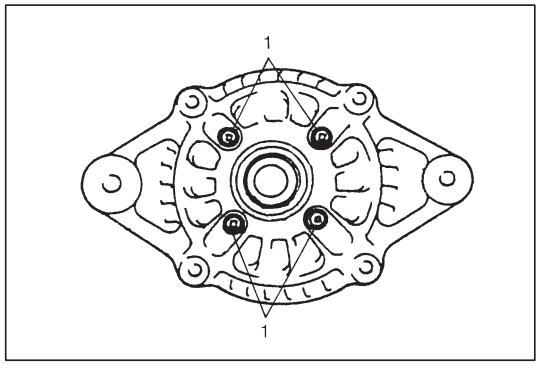

6) When removing front bearing, remove bearing retainer screws (1) and retainer.

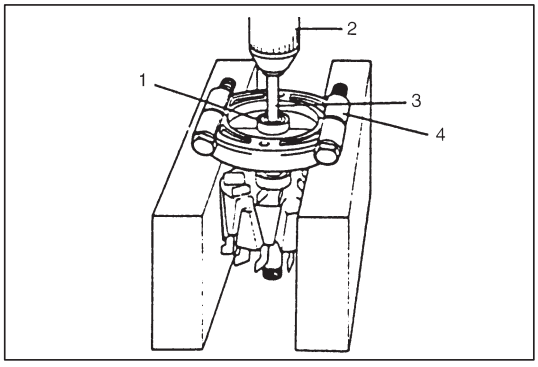

7) When removing rear bearing (1), use oil hydraulic press (2) general rod (3) and general tool (4).

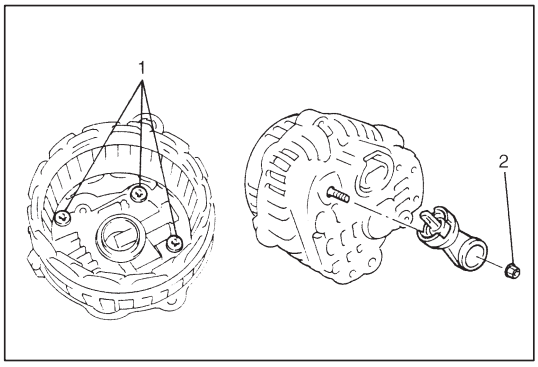

8) Remove three screws (1) and generator “B” terminal nut (2).
9) Remove stator with IC regulator assembly from rear housing.

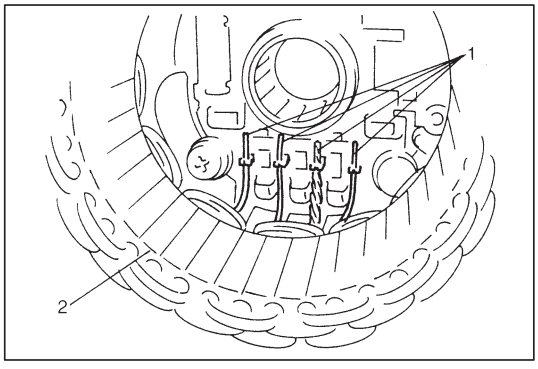

10) Unsolder stator leads (1) and remove stator (2) from IC regulator assembly.

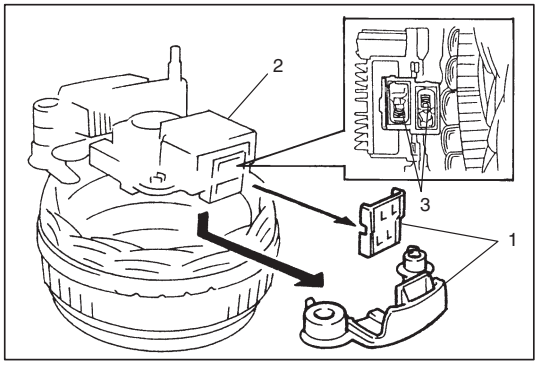

11) To remove brush, remove holder (1) from brush holder (2) and then disconnect brush wire (3) from regulator terminal using soldering iron.

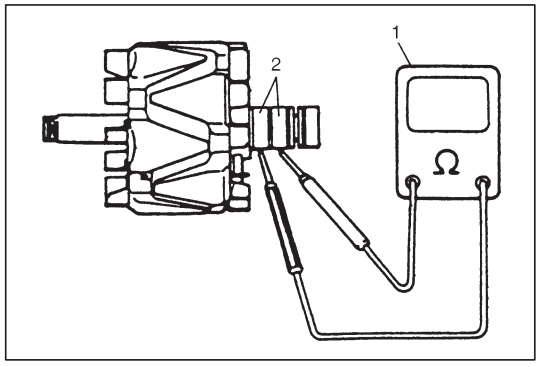

INSPECTION

Rotor

1) Using ohmmeter (1), check for continuity between slip rings of rotor (2).
   If there is no continuity, replace rotor.

   Standard resistance: 2.5 – 2.9 Ω

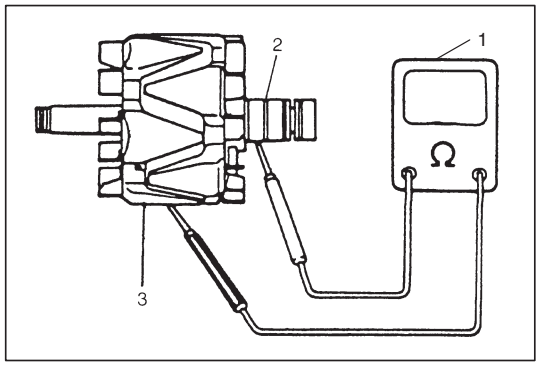

2) Using ohmmeter (1), check that there is no continuity between slip ring (2) and rotor core (3).
   If there is continuity, replace rotor.
3) Check slip rings for roughness or scoring.
   If rough or scored, replace rotor.

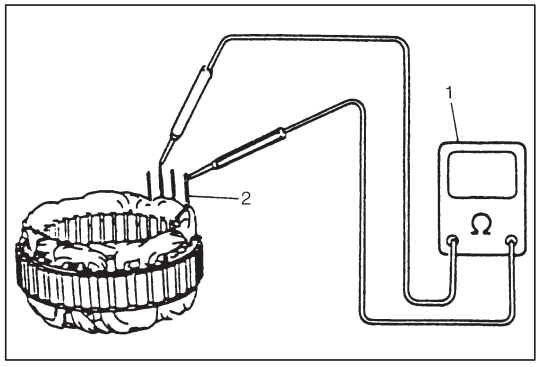

Stator

1) Using ohmmeter (1), check all stator coil leads (2) for continuity.
   If there is no continuity, replace stator.

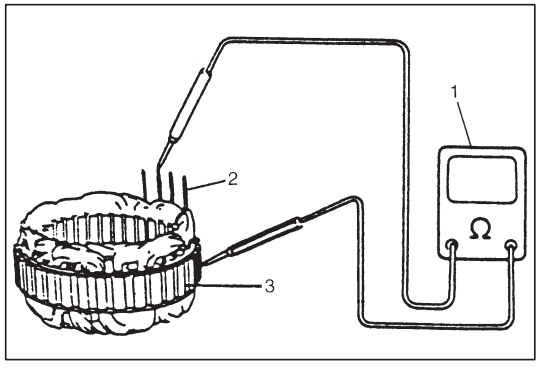

2) Using ohmmeter (1), check that there is no continuity between stator coil leads (2) and stator core (3).
   If there is continuity, replace stator.

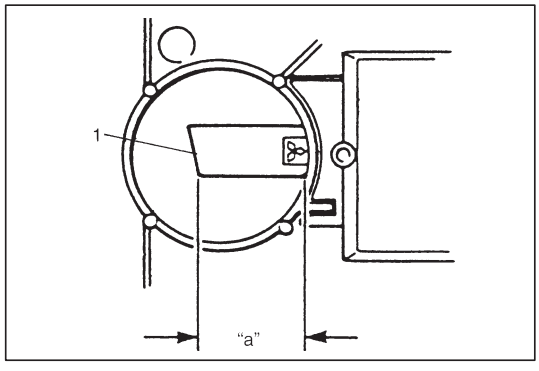

Brush and brush holder

Check each brush (1) for wear by measuring its length.
If brush is found worn down to service limit, replace brush.

Brush length "a"
Standard: 16 mm (0.63 in.)
Service limit: 2 mm (0.08 in.)

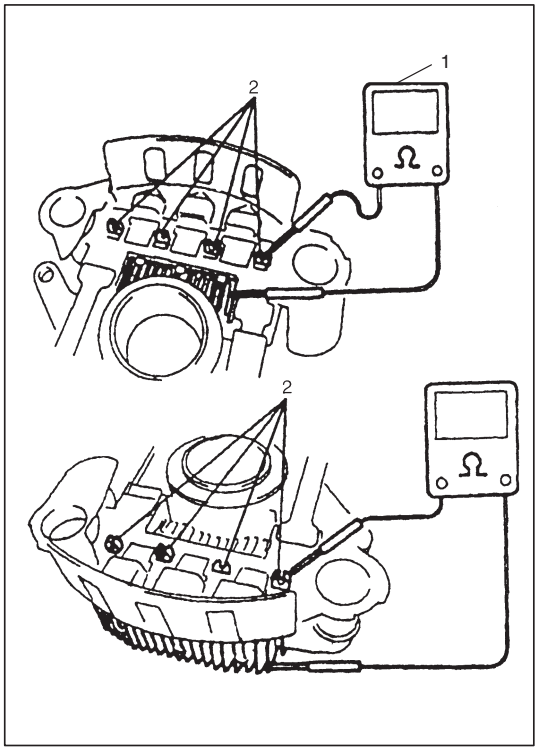

Rectifier

Using ohmmeter (1), check continuity between each of upper and lower rectifier bodies and each diode lead (2).

Check both directions by reversing probes of ohmmeter and there should be only one-way continuity in each case.

If check result is not satisfactory, replace rectifier.

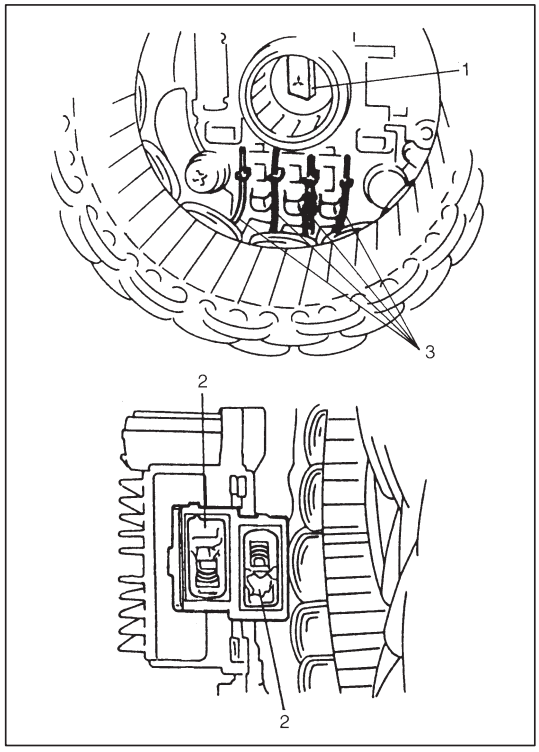

ASSEMBLY

Reverse disassembly procedure for installation, noting the following instruction.

- Be sure to install brushes (1) in the proper direction as shown and solder brush wires (2) and stator leads (3).

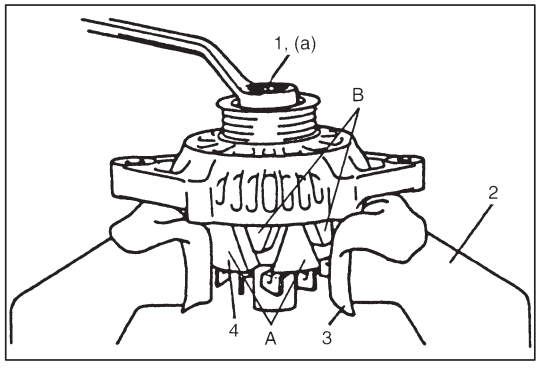

- Tighten generator pulley nut (1) to specified torque.

Tightening Torque
(a): 118 N·m (11.8 kg-m, 85.5 lb-ft)

NOTE:
- **When using vise (2), put clean cloth (3) between rotor (4) and vise so as not to cause damage to rotor.**
- **Be sure to hold the location A. Do not hold the location B as it does not have enough structural strength.**

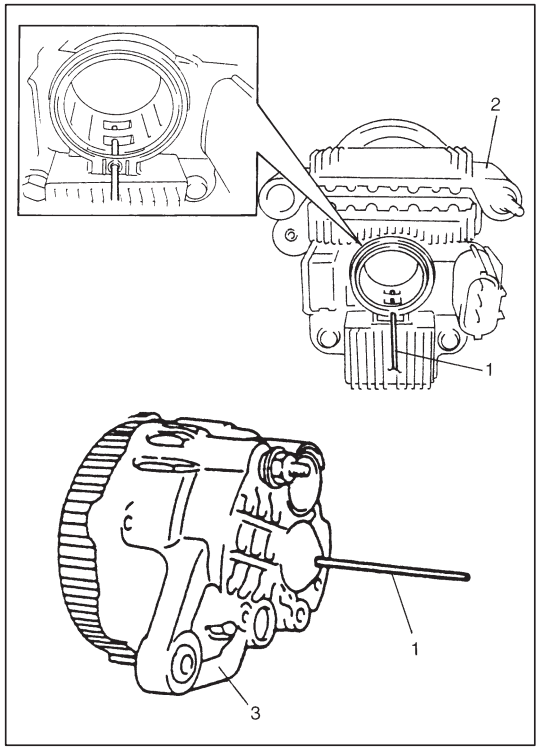

- Push brushes into brush holder, then support brushes by inserting appropriate wire (1) before install IC regulator assembly (2) to rear housing (3).

NOTE:
- **After installing rotor, remove wire.**
- **Check to make sure that match marks on front and rear housing are aligned.**
- **Do not apply grease to rear (rotor) bearing. Remove oil completely if found in bearing box of rear housing.**

- After assembling generator, make sure that rotor turns smoothly.

SPECIFICATIONS

BATTERY

Battery type	PERION 6A3625	PERION 6A4425
Nominal output	12 V	
Rated capacity	36 Ah/20 h	44 Ah/20 h
	28 Ah/5 h	36 Ah/5 h
Cold cranking amperes	332 A	390 A
Electrolyte	3.8 L (8.03/6.69 US/Imp pt)	
Electrolyte specified gravity	1.28 when fully charged at 25°C (77°F)	
Battery dimension	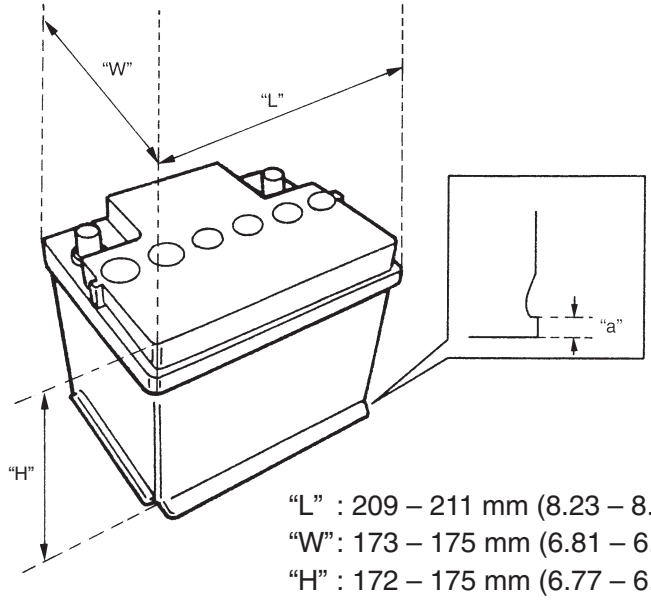 "L" : 209 – 211 mm (8.23 – 8.31 in.) "W": 173 – 175 mm (6.81 – 6.89 in.) "H" : 172 – 175 mm (6.77 – 6.89 in.) "a" : 10.5 mm (0.41 in.)	

GENERATOR

Rated voltage	12 V
Nominal output	70 A
Permissible max. speed	18000 r/min.
No-load speed	1300 r/min (rpm)
Setting voltage	14.4 to 15.0 V (at 20°C (68°F))
Permissible ambient temperature	–30 to 90°C (–22 to 194°F)
Polarity	Negative ground
Rotation	Clockwise viewed from pulley side

SECTION 6K

EXHAUST SYSTEM

CONTENTS

ON-VEHICLE SERVICE

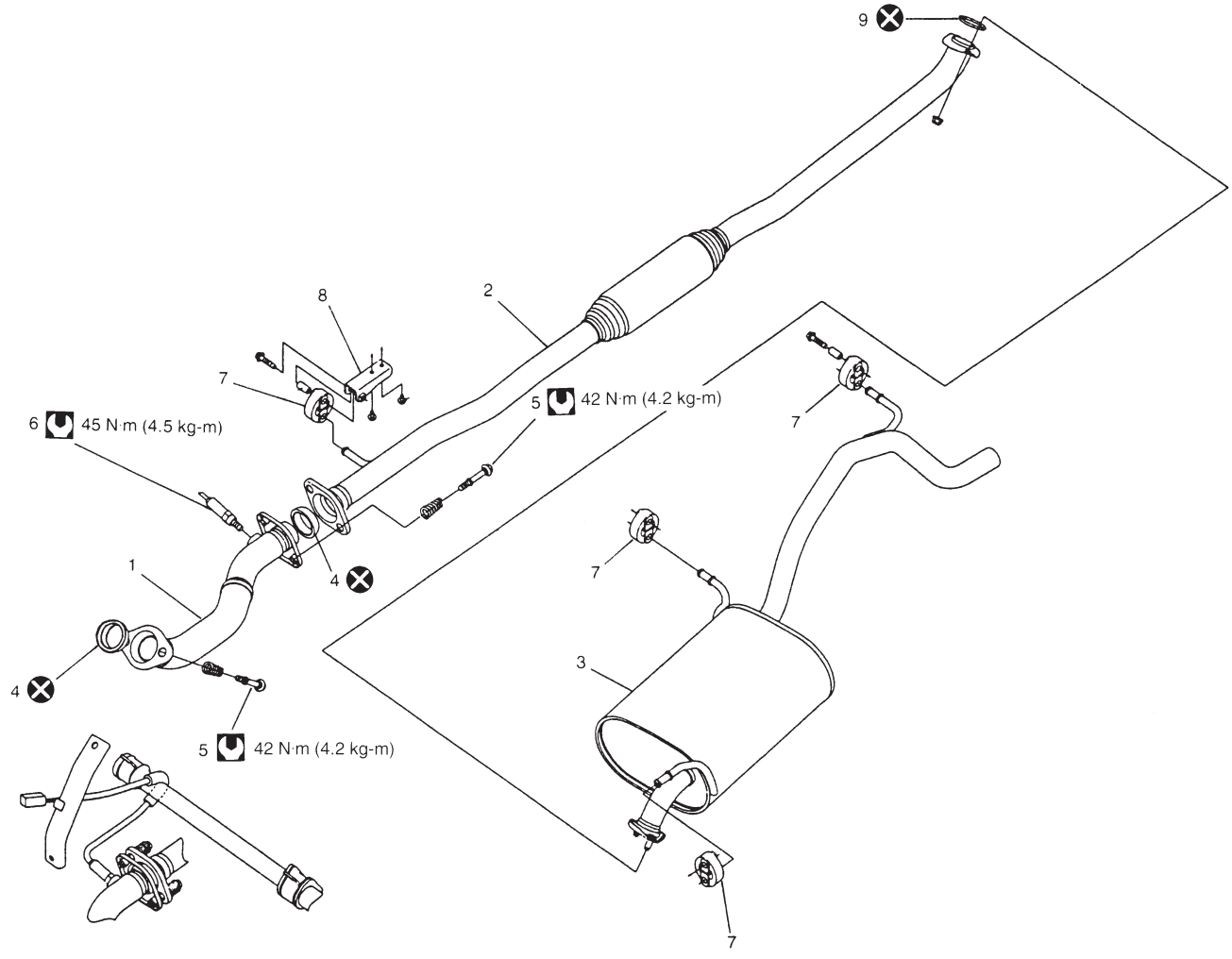

1. Exhaust No.1 pipe
2. Exhaust No.2 pipe
3. Muffler
4. Exhaust No.1 pipe seal ring
5. Exhaust pipe bolt
6. Oxygen sensor No.2
7. Muffler mounting
8. Exhaust No.1 pipe bracket
9. Exhaust pipe gasket

: Tightening Torque
: Do not reuse

MAINTENANCE

WARNING:
To avoid the danger of being burned, do not touch the exhaust system when the system is hot. Any service on the exhaust system should be performed when the system is cool.

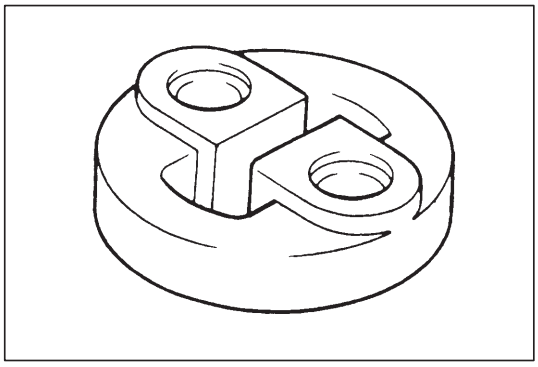

At every interval of periodic maintenance service, and when vehicle is raised for other service, check exhaust system as follows:

- Check rubber mountings for damage, deterioration, and out of position.
- Check exhaust system for leakage, loose connection, dent and damage.
  If bolts or nuts are loosened, tighten them to specified torque.
- Check nearby body areas for damaged, missing, or mispositioned part, open seam, hole, loose connection or any other defect which could permit exhaust fumes to seep into vehicle.
- Make sure that exhaust system components have enough clearance from underbody to avoid overheating and possible damage to passenger compartment carpet.
- Any defect should be fixed at once.

SECTION 7A

MANUAL TRANSMISSION

WARNING:
For vehicles equipped with Supplemental Restraint (Air Bag) System:

- **Service on and around the air bag system components or wiring must be performed only by an authorized SUZUKI dealer. Refer to "Air Bag System Components and Wiring Location View" under "General Description" in air bag system section in order to confirm whether you are performing service on or near the air bag system components or wiring. Please observe all WARNINGS and "Service Precautions" under "On-Vehicle Service" in air bag system section before performing service on or around the air bag system components or wiring. Failure to follow WARNINGS could result in unintentional activation of the system or could render the system inoperative. Either of these two conditions may result in severe injury.**
- **Technical service work must be started at least 90 seconds after the ignition switch is turned to the "LOCK" position and the negative cable is disconnected from the battery. Otherwise, the system may be activated by reserve energy in the Sensing and Diagnostic Module (SDM).**

CONTENTS

GENERAL DESCRIPTION

CONSTRUCTION AND SERVICING

The transmission provides five forward speeds and one reverse speed by means of three synchronizers and three shafts-input shaft, countershaft and reverse gear shaft. All forward gears are in constant mesh, and reverse uses a sliding idler gear arrangement.

The low speed synchronizer is mounted on counter shaft and engaged with counter shaft first gear or second gear, while the high speed synchronizer is done on input shaft and engaged with input shaft third gear or fourth gear.

The fifth speed synchronizer on input shaft is engaged with input shaft fifth gear mounted on the input shaft.

The countershaft turns the final gear and differential assembly, thereby turning the front drive shafts which are attached to the front wheels.

For servicing, it is necessary to use genuine sealant or its equivalent on mating surfaces of transmission case which is made of aluminum. The case fastening bolts must be tightened to specified torque by means of torque wrench. It is also important that all parts are thoroughly cleaned with cleaning fluid and air dried before reassembling.

Further, care must be taken to adjust preload of counter shaft taper roller bearings. New synchronizer rings are prohibited from being lapped with respective gear cones by using lapping compound before they are assembled.

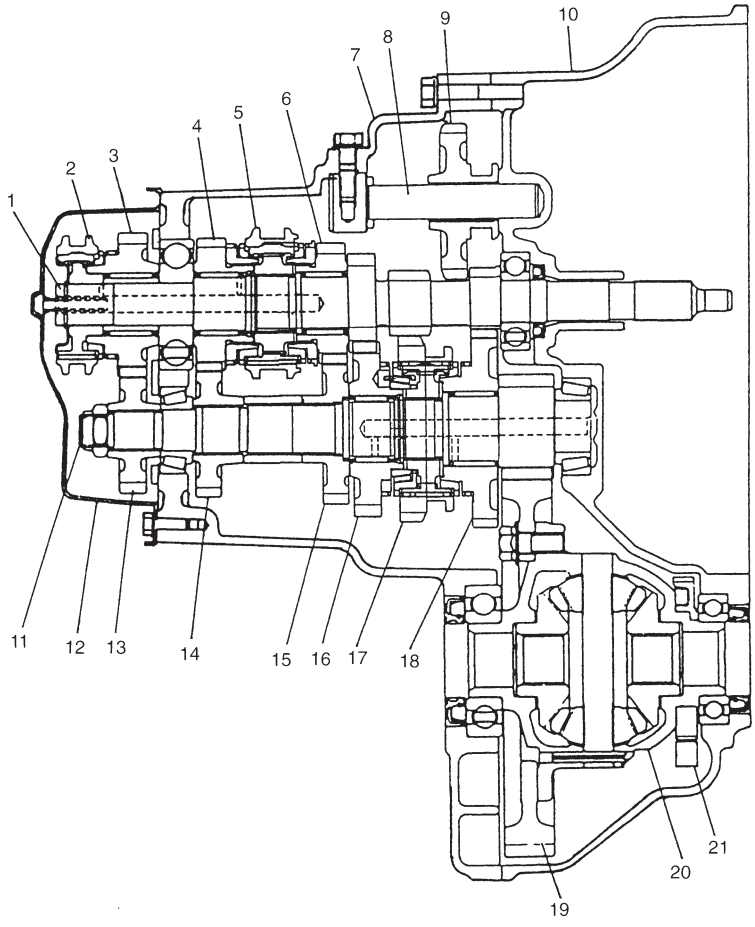

1. Input shaft
2. 5th speed sleeve & hub
3. Input shaft 5th gear
4. Input shaft 4th gear
5. High speed sleeve & hub
6. Input shaft 3rd gear
7. Left case
8. Reverse gear shaft
9. Reverse idler gear
10. Right case
11. Countershaft
12. Side cover
13. Countershaft 5th gear
14. Countershaft 4th gear
15. Countershaft 3rd gear
16. Countershaft 2nd gear
17. Low speed sleeve & hub
18. Countershaft 1st gear
19. Final gear
20. Differential case
21. VSS

GEAR SHIFT MECHANISM

The gear shifting control system consists of the following main parts. Movement of gear shift control lever is transmitted to gear shift & select shaft through gear shift and gear select cables.

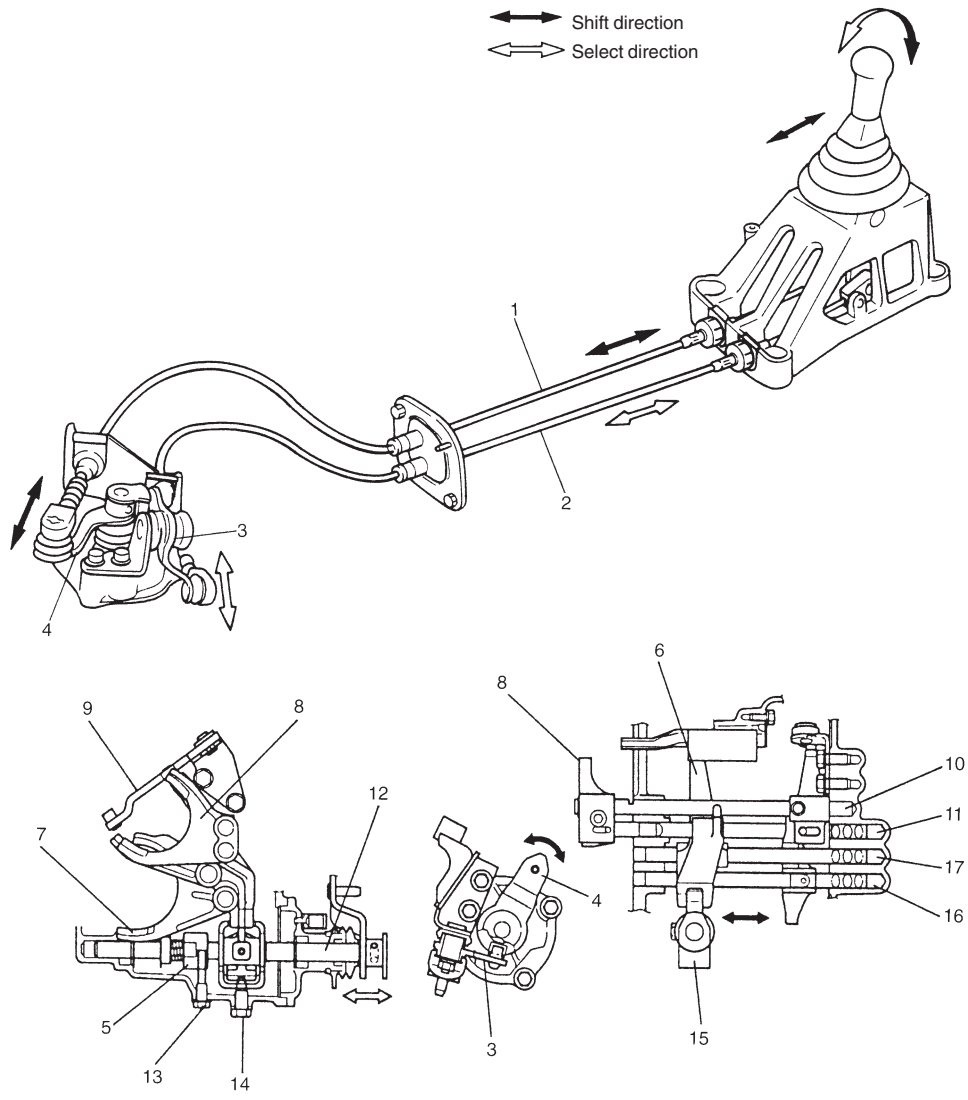

1. Gear shift control cable
2. Gear select control cable
3. Gear select cable lever
4. Gear shift cable lever
5. 5th & reverse gear shift cam
6. High speed shift fork
7. Low speed gear shift fork
8. 5th gear shift fork
9. Reverse gear shift lever
10. 5th & reverse gear shift guide shaft
11. 5th & reverse gear shift shaft
12. Gear shift & select shaft
13. 5th to reverse interlock guide bolt
14. Gear shift interlock bolt
15. Gear shift & select lever
16. Low speed gear shift shaft
17. High speed gear shift shaft

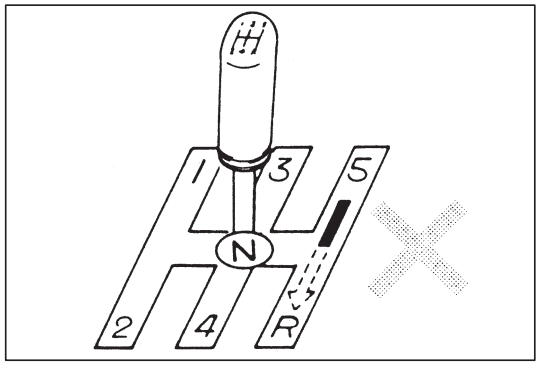

5TH & REVERSE GEAR SHIFT CAM

5th & reverse gear shift cam, cam guide return spring and 5th to reverse interlock guide bolt are provided to prevent the gear from being directly shifted from 5th to reverse.

DIAGNOSIS

Condition	Possible Cause	Correction
Gears slipping out of mesh	● Maladjusted gear shift/select control cables ● Worn shift fork shaft ● Worn shift fork or synchronizer sleeve ● Weak or damaged locating springs ● Worn bearings on input shaft or counter shaft ● Worn chamfered tooth on sleeve and gear	Adjust. Replace. Replace. Replace. Replace. Replace sleeve and gear.
Hard shifting	● Maladjusted gear shift/select control cables ● Inadequate lubricant ● Improper clutch pedal free travel ● Distorted or broken clutch disc ● Damaged clutch pressure plate ● Worn synchronizer ring ● Worn chamfered tooth on sleeve or gear ● Worn gear shift/select control cables joint ● Distorted shift shaft	Adjust. Replenish. Adjust. Replace. Replace clutch cover. Replace. Replace sleeve or gear. Replace. Replace.
Noise	● Inadequate or insufficient lubricant ● Damaged or worn bearing(s) ● Damaged or worn gear(s) ● Damaged or worn synchronizer parts	Replenish. Replace. Replace. Replace.

ON-VEHICLE SERVICE

CAUTION:
Do not reuse circlip, spring pin, E-ring, oil seal, gasket, self locking nut and specified parts. Reuse of it can result in trouble.

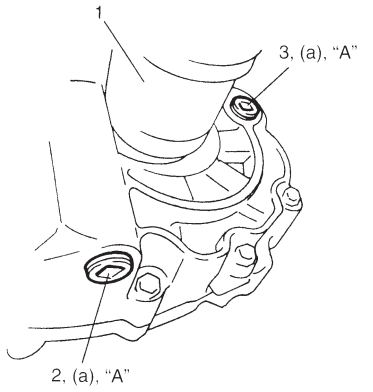

1. Drive shaft (LH)

Viscosity chart

SAE

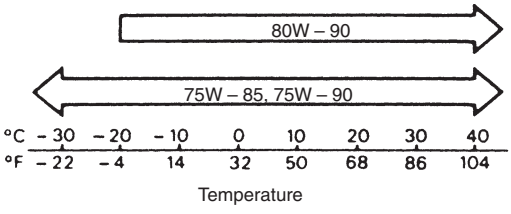

OIL CHANGE

1) Before changing or inspecting oil, be sure to stop engine and lift vehicle horizontally.
2) With vehicle lifted up, check oil level and leakage.
   If leakage exists, correct it.
3) Drain old oil and fill new specified oil by specified amount (up to level hole).
4) Apply sealant to thread of drain plug (2) and level/filler plug (3) and torque them as specified below.

"A": Sealant, Bond No. 1215, 99000-31110

Tightening Torque
(a): 21 N·m (2.1 kg-m, 15.5 lb-ft)

NOTE:
- **It is recommended to use API GL-4 75W-90 gear oil.**
- **Whenever vehicle is hoisted for any other service work than oil change, also be sure to check for oil leakage.**

Oil specification: API GL-4
For SAE classification, refer to viscosity chart at the left.
Oil capacity : 2.2 liters (4.6/3.9 US/Imp. pt)

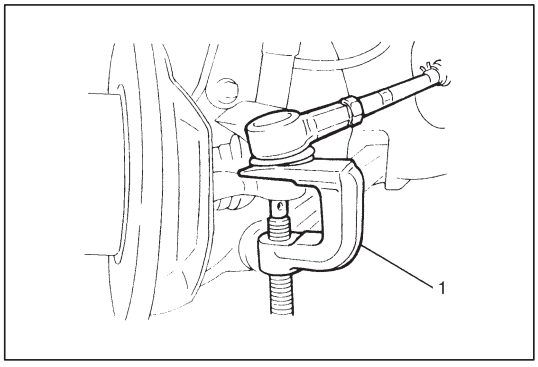

DIFFERENTIAL SIDE OIL SEAL

REPLACEMENT

1) Lift up vehicle and drain transmission oil.
2) Remove wheel, and then remove tie-rod end nut.
3) Disconnect tie-rod end from knuckle by using puller (1).
4) Remove two stabilizer mount brackets from vehicle body.
5) Remove ball stud bolt and then separate suspension arm from knuckle.

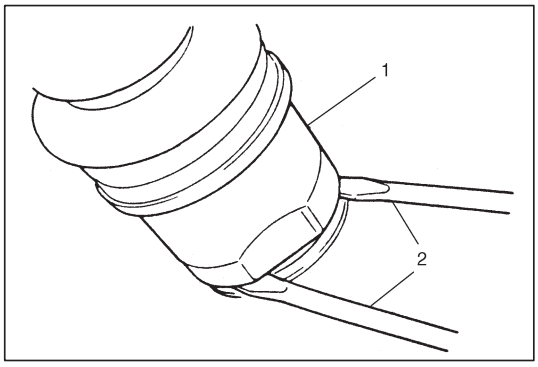

6) By using large size screwdrivers (2), pull out drive shaft joint (1) so as to release snap ring fitting of joint spline at differential side. Pushing knuckle portion outward, detach drive shaft at differential side.

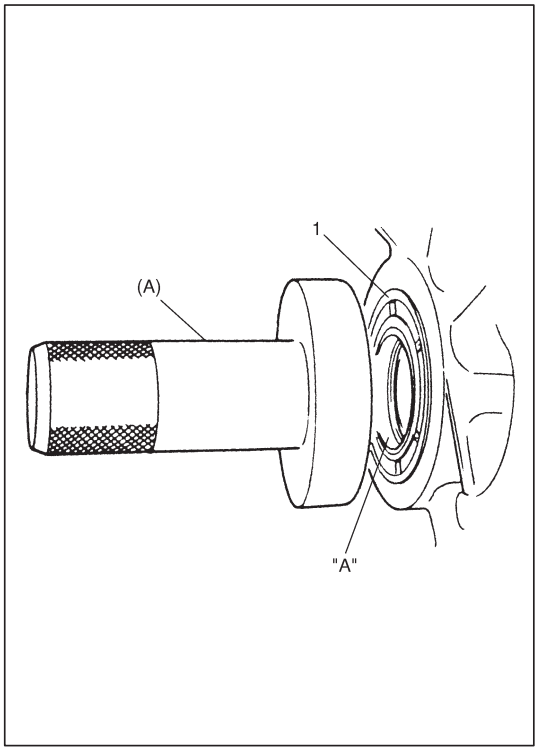

7) Remove oil seal (1) and install a new one until it becomes flush with case surface by using special tool and hammer.

NOTE:
When installing oil seal, face its spring side inward.

Special Tool
(A): 09913-75510

8) Apply grease to oil seal lip and at the same time check drive shaft where oil seal contacts and make sure of its smoothness.

"A": Grease A 99000-25010

9) Insert drive shaft joint to differential gear.

CAUTION:
- **Be careful not to scratch oil seal lip with drive shaft joint while inserting.**
- **Make sure to insert drive shaft joint fully and seat its snap ring as it was.**
- **Do not hit joint boot with hammer or the like. Nothing but hands is allowed to use when inserting joint.**

10) Connect ball stud with knuckle and fasten with bolt to specification referring to Section 4.
11) Connect tie-rod end with knuckle and fasten new nut to specified torque referring to Section 4.
12) Install stabilizer mount brackets, fasten bolts to specified torque referring to Section 4.
13) Fill transmission oil as specified and make sure that oil has been sealed with oil seal.

GEAR SHIFT CONTROL LEVER AND CABLE

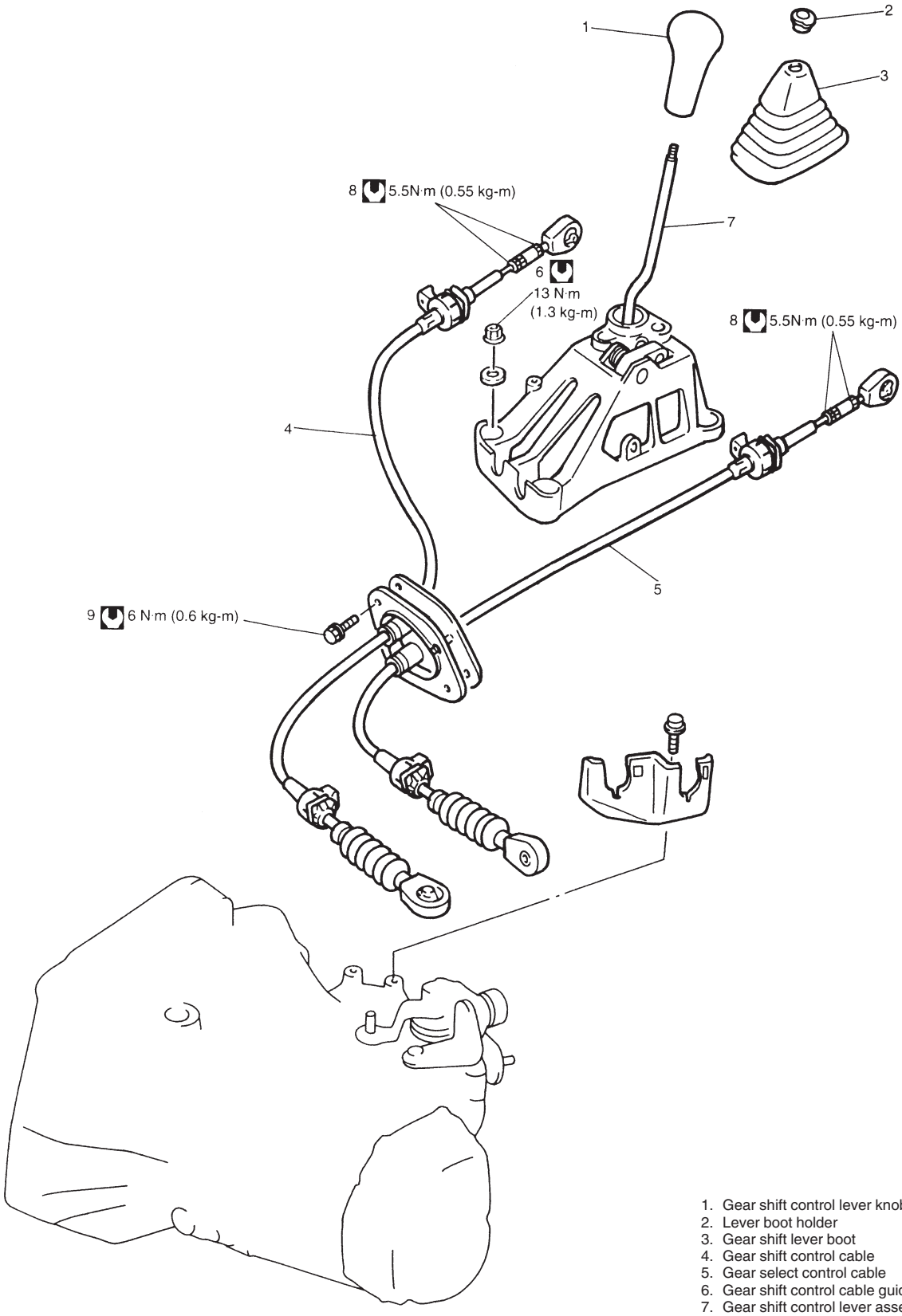

1. Gear shift control lever knob
2. Lever boot holder
3. Gear shift lever boot
4. Gear shift control cable
5. Gear select control cable
6. Gear shift control cable guide nut
7. Gear shift control lever assembly
8. Cable nut
9. Cable mounting bolt

: Tightening Torque

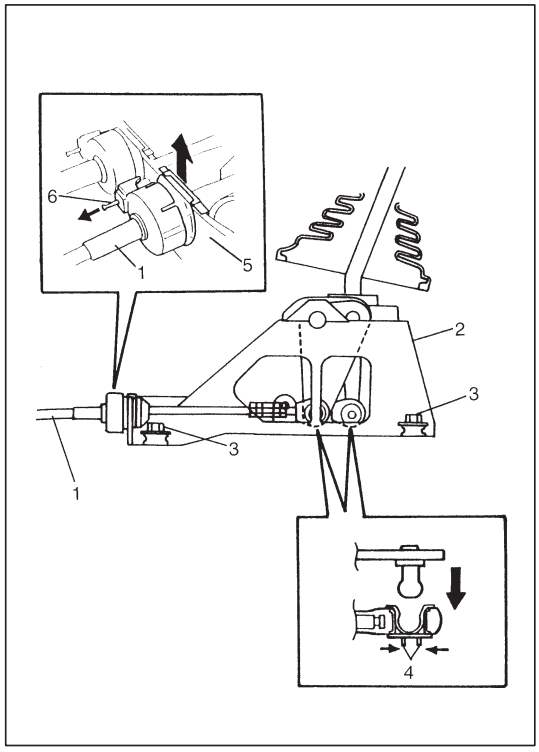

REMOVAL

1) Remove console box.
2) Disconnect gear shift and select control cables (1) from gear shift control lever assembly (2).
   a) Disconnect cable end from pivot while pushing cable end bush (4).
   b) Detach cable from bracket (5) while pulling pin (6).
3) Remove gear shift lever assembly mounting control cable guide nuts (3) and gear shift lever assembly from body.
4) Disconnect shift and select cables from transmission in the same manner as step 2).
5) Remove cable grommet and cable clamp, and then remove shift and select cables from body.

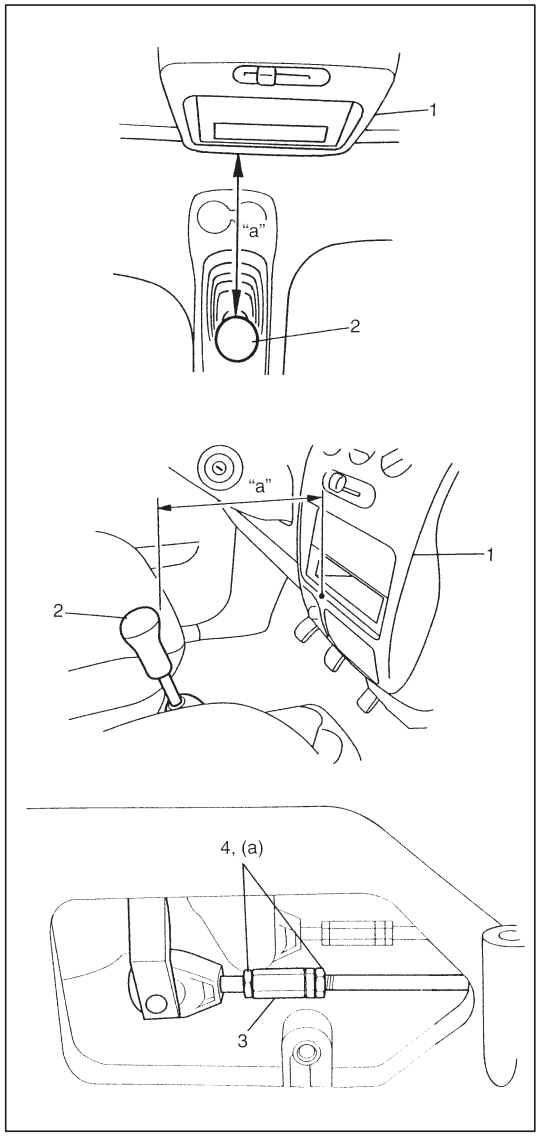

INSTALLATION

Reverse removal procedure for installation and note as follows.

- Tighten gear shift control lever assembly mounting nuts to specified torque.

  Tightening Torque
  13 N·m (1.3 kg-m, 9.5 lb-ft)

- Adjustment of shift cable.
  With shift control lever in NEUTRAL position, adjust shift cable adjusting nut (3) so that distance "a" between edge of instrument panel (1) and center of shift knob (2) measured as shown.

  NOTE:
  - **After shift cable adjustment, tighten lock nut (4) to specified torque.**

    Tightening Torque
    (a): 5.5 N·m (0.55 kg-m, 4.0 lb-ft)

  - **Make sure that boots are installed correctly.**

    Distance "a": 215 mm (8.46 in.)

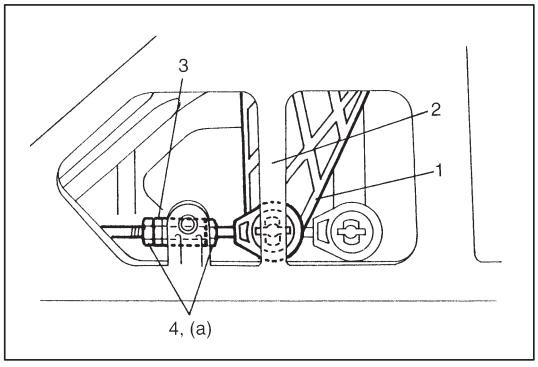

- Adjustment of select cable.
  With shift control lever in NEUTRAL position, adjust select cable adjusting nut (3) so that the tip of select arm (cable joint point) (1) and the center rib of gear shift control lever assembly (2) are aligned as shown.

  NOTE:
  After select cable adjustment, tighten lock nut (4) to specified torque.

  Tightening Torque
  (a): 5.5 N·m (0.55 kg-m, 4.0 lb-ft)

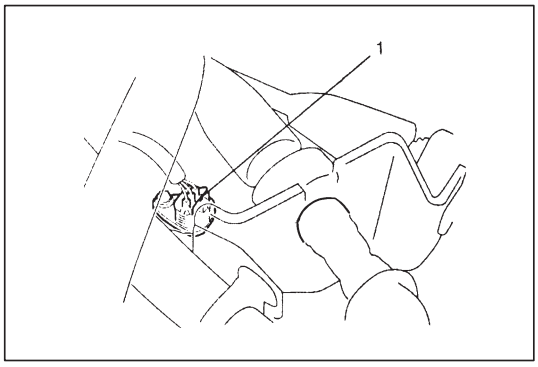

VEHICLE SPEED SENSOR (VSS)

REMOVAL

1) Disconnect negative cable at battery.
2) Disconnect VSS coupler (1).

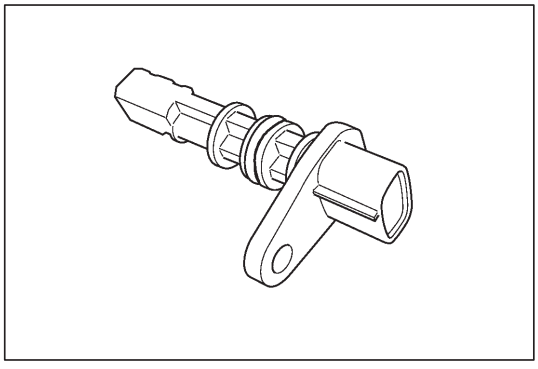

3) Remove VSS.

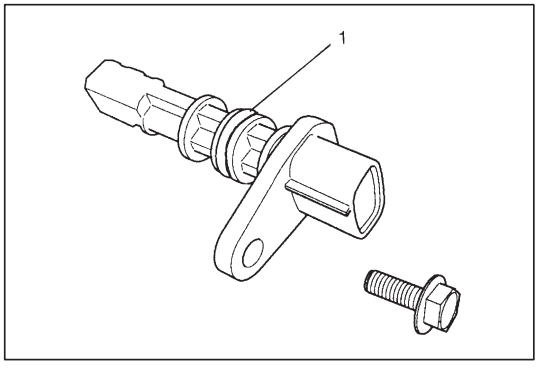

INSTALLATION

1) Check O-ring (1) and VSS surface for their flawlessness, apply oil to O-ring and then install VSS to transmission.

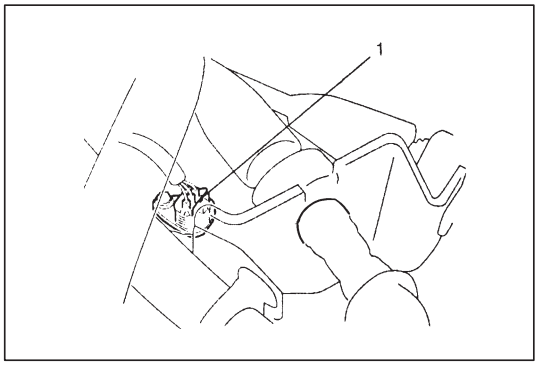

2) Connect VSS coupler (1).
3) Connect negative cable at battery.

UNIT REPAIR OVERHAUL

TRANSMISSION UNIT

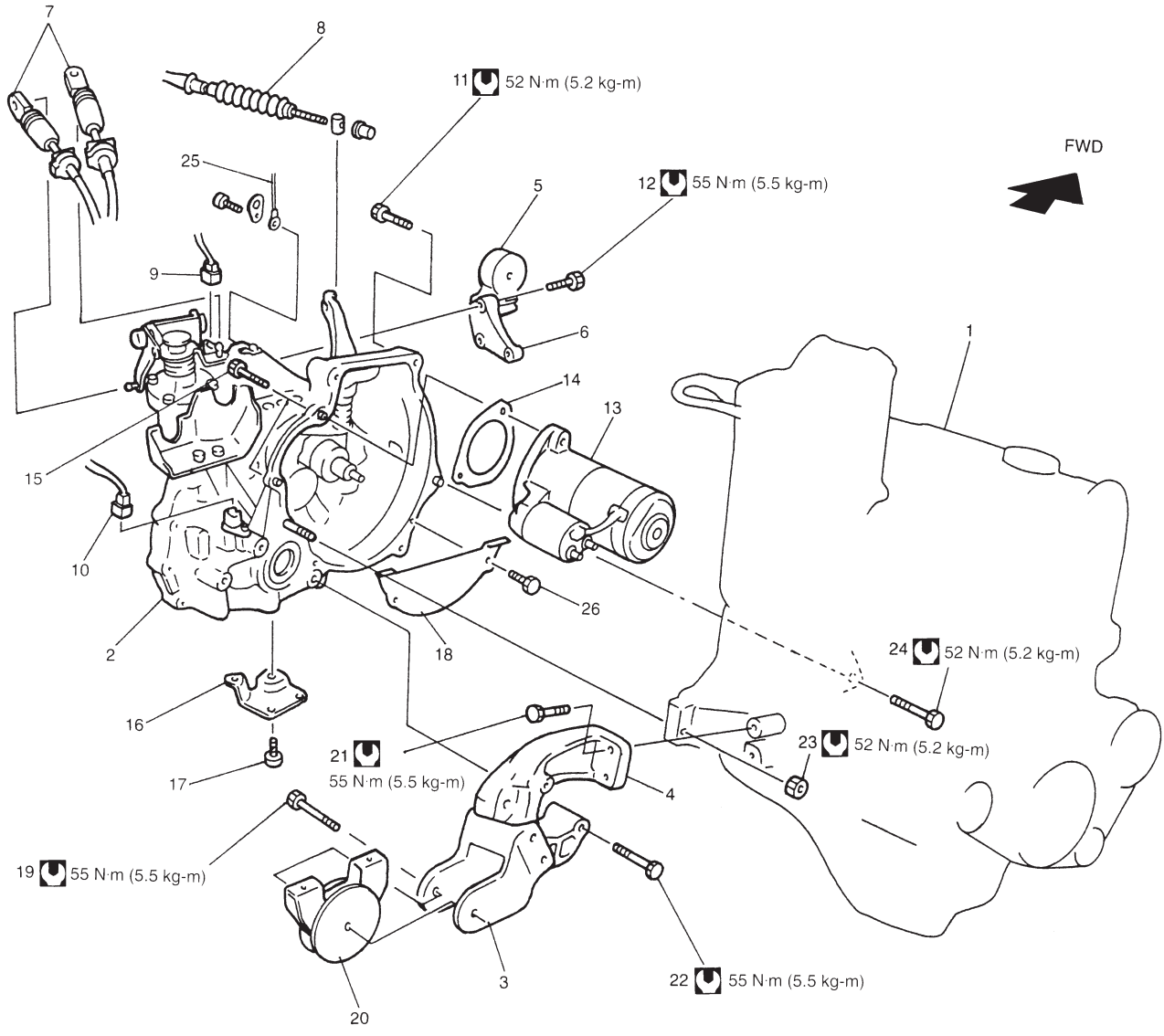

1. Engine
2. Transmission
3. Engine rear mounting No.1 bracket
4. Engine rear mounting No.2 bracket
5. Engine left mounting
6. Engine left mounting bracket
7. Shift & select control cables
8. Clutch cable
9. Back up light switch connector
10. VSS connector
11. Transmission to engine bolts
12. Engine left mounting bracket bolts
13. Starting motor
14. Starting motor plate
15. Starting motor bolts
16. Engine rear mounting bracket stiffener
17. Stiffener bolts
18. Clutch housing lower plate
19. Engine rear mounting bolt
20. Engine rear mounting
21. Engine rear mounting No.2 bracket bolts
22. Transmission to engine rear mounting No.2 bracket bolt
23. Transmission to engine nut
24. Transmission to engine bolts
25. Ground cable
26. Clutch housing lower plate bolts

: Tightening Torque

TRANSMISSION CASE

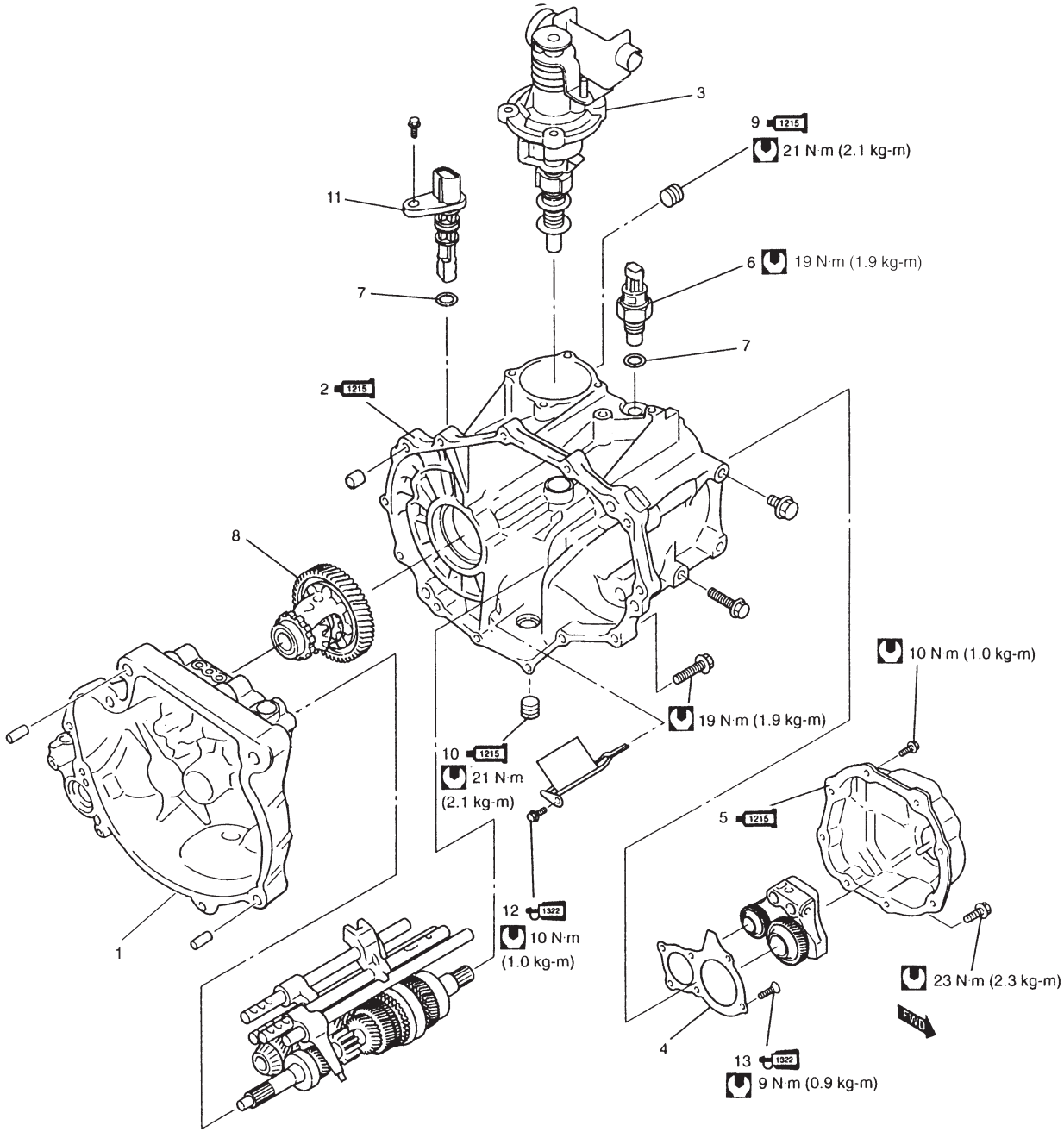

1. Transmission right case
2. 1215 Transmission left case: Apply sealant 99000-31110 to mating surface of left case and right case.
3. Gear shifter assembly
4. Transmission left case plate
5. 1215 Transmission side cover: Apply sealant 99000-31110 to mating surface of side cover and left case.
6. Back up light switch
7. O-ring
8. Differential assembly
9. 1215 Oil level / filler plug: Apply sealant 99000-31110 to all around thread part of plug.
10. 1215 Oil drain plug: Apply sealant 99000-31110 to all around thread part of plug.
11. VSS
12. 1322 Oil gutter bolt: Apply thread lock 99000-32110 to all around thread part of bolt.
13. Left case plate screw

: Tightening Torque
: Do not reuse

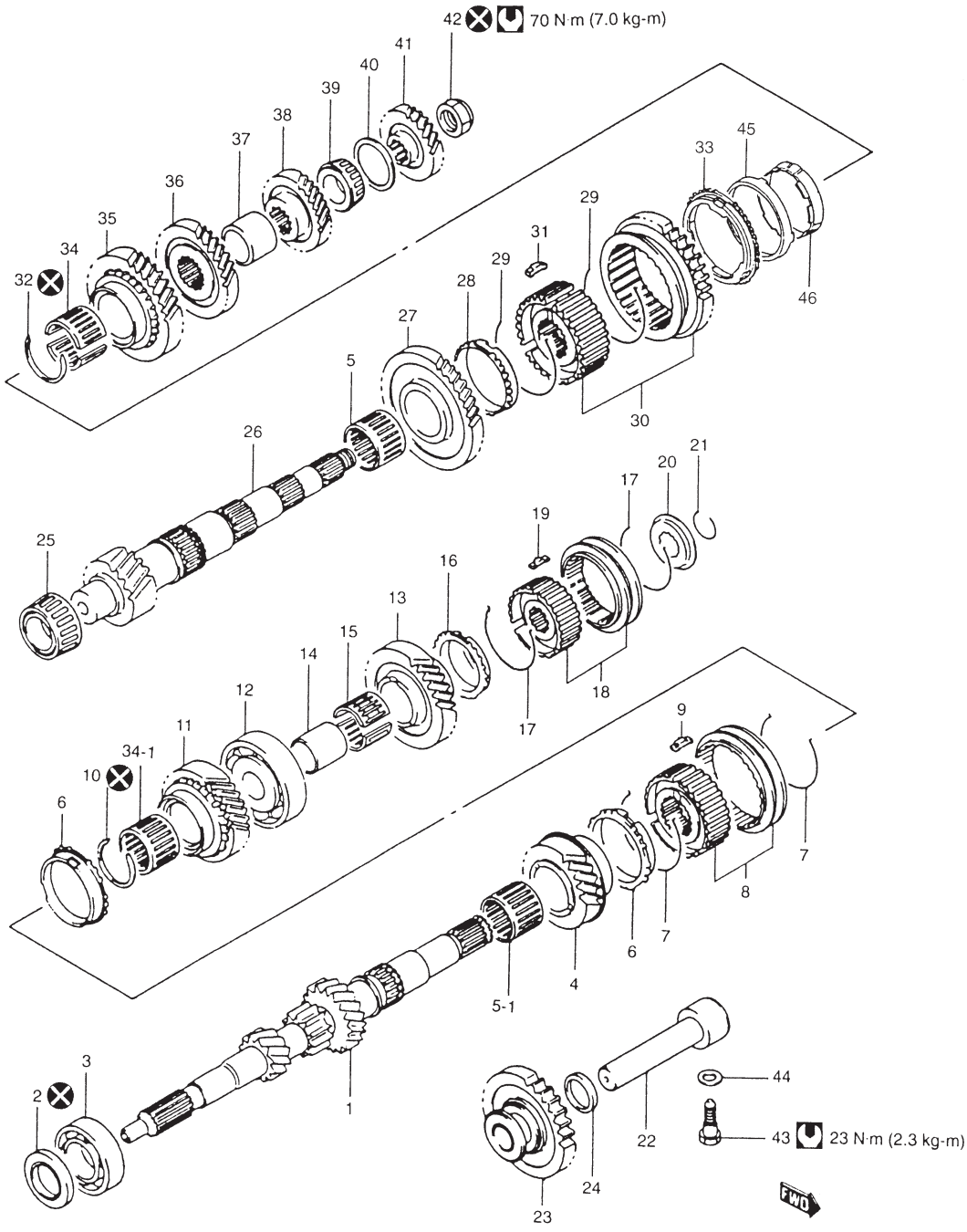

1. Input shaft
2. Oil seal
3. Input shaft right bearing
4. Input shaft 3rd gear
5. Needle bearing (resin cage type)
5-1. Needle bearing (resin cage type)
6. High speed synchronizer ring
7. High speed synchronizer spring
8. High speed sleeve & hub
9. High speed synchronizer key
10. Circlip
11. Input shaft 4th gear
12. Input shaft left bearing
13. Input shaft 5th gear
14. 5th gear spacer
15. 5th gear needle bearing (separated steel cage type)
16. 5th speed synchronizer ring
17. 5th synchronizer spring
18. 5th speed sleeve & hub
19. 5th synchronizer key
20. 5th synchronizer hub plate
21. Circlip
22. Reverse gear shaft
23. Reverse idler gear
24. Reverse shaft washer
25. Countershaft right bearing
26. Countershaft
27. Countershaft 1st gear
28. 1st gear synchronizer ring
29. Low speed synchronizer spring
30. Low speed sleeve & hub
31. Low speed synchronizer key
32. Circlip
33. 2nd gear synchronizer outer ring
34. Needle bearing (separated steel cage type)
34-1. Needle bearing (steel cage type)
35. Countershaft 2nd gear
36. Countershaft 3rd gear
37. 3rd & 4th gear spacer
38. Countershaft 4th gear
39. Countershaft left bearing
40. Bearing set shim
41. Countershaft 5th gear
42. Countershaft nut
43. Reverse shaft bolt
44. Washer
45. Center cone
46. 2nd gear synchronizer inner ring

: Tightening Torque
: Do not reuse

GEAR SHIFTER

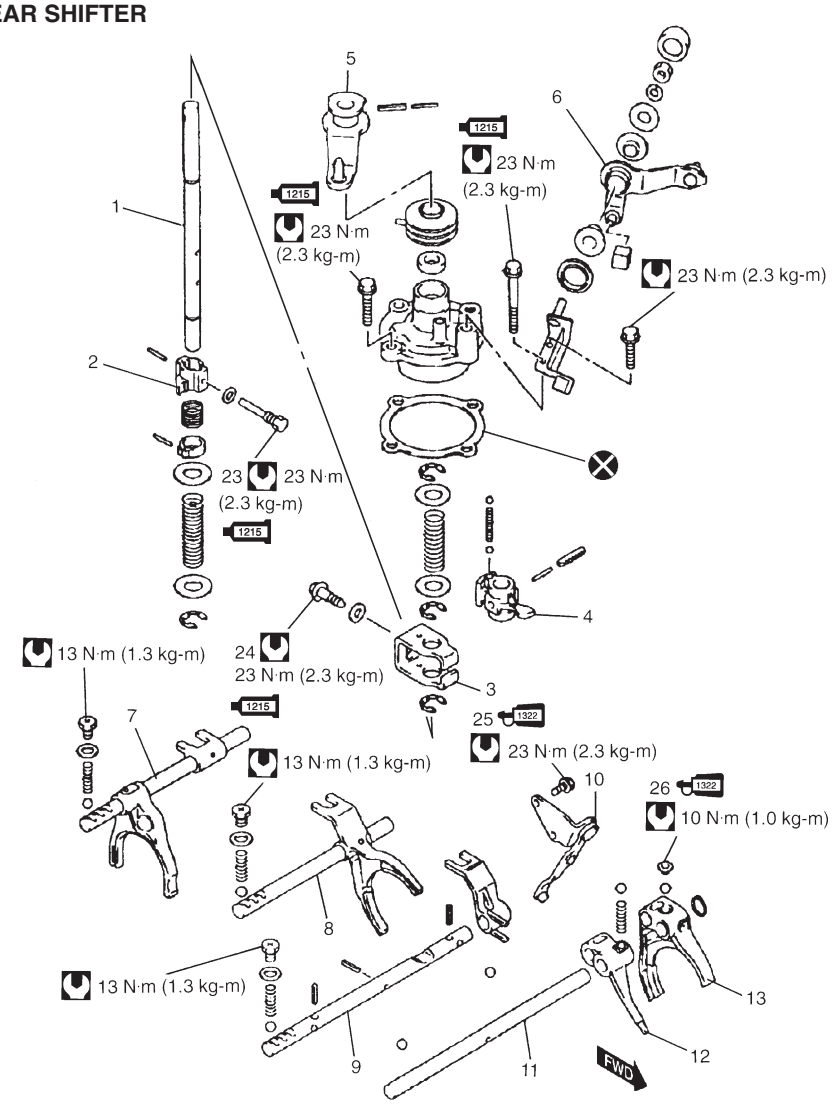

1. Gear shift & select shaft
2. 5th & reverse gear shift cam
3. Gear shift interlock plate
4. Gear shift & select lever
5. Shift cable lever
6. Select cable lever
7. Low speed gear shift shaft
8. High speed gear shift shaft
9. 5th & reverse gear shift shaft
10. Reverse gear shift lever
11. 5th & reverse gear shift guide shaft
12. Reverse gear shift arm
13. 5th gear shift fork
14. Side gear washer
15. Differential side pinion gear
16. Differential side gear
17. Side gear washer
18. Differential side oil seal
19. Differential side bearing
20. Speed sensor ring
21. Differential case
22. Final gear
23. (1215) 5th to reverse interlock guide bolt: Apply sealant, SUZUKI Bond No. 1215, 99000-31110 to bolt thread.
24. (1215) Gear shift interlock bolt: Apply sealant, SUZUKI Bond No. 1215, 99000-31110 to bolt thread.
25. (1322) Reverse gear shift lever bolt: Apply thread lock 99000-32110 to all around thread part of bolt.
26. (1322) 5th gear shift fork plug: Apply thread lock 99000-32110 to all around thread part of plug.

DIFFERENTIAL

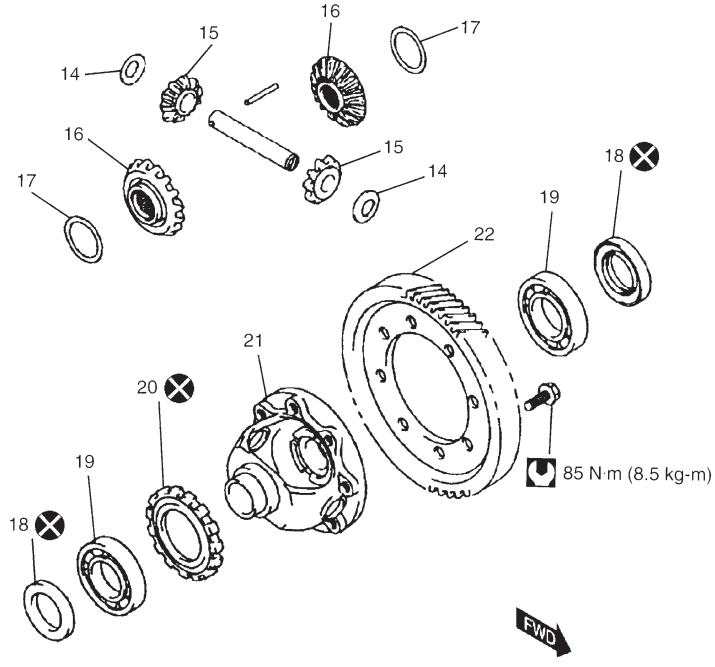

: Tightening Torque
: Do not reuse

DISMOUNTING OF TRANSMISSION

UNDER HOOD

1) Disconnect negative cable at battery.
2) Undo wiring harness clamps, disconnect back up light switch coupler, VSS coupler and ground cable.
3) Disconnect clutch cable from clutch release lever and bracket.
4) Disconnect gear shift and select control cables.

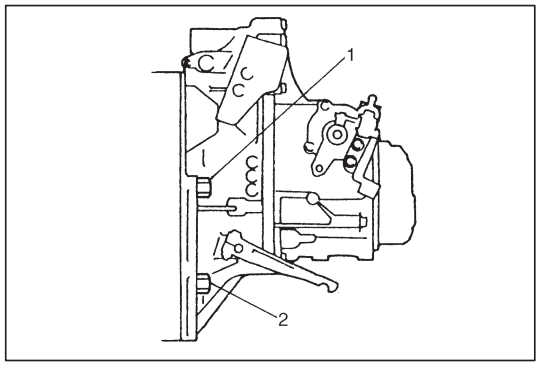

5) Remove bolt (2), and loosen bolt (1) which is unable to be removed due to interference of water pipe.
6) Remove starting motor taking out its bolts. Starting motor plate should also come down.
7) Support engine by using lifting device.

ON LIFT

8) Drain transmission oil referring to OIL CHANGE of ON-VEHICLE SERVICE in this section.
9) Remove left and right drive shaft referring to Section 4.
10) Remove left side of engine under cover.

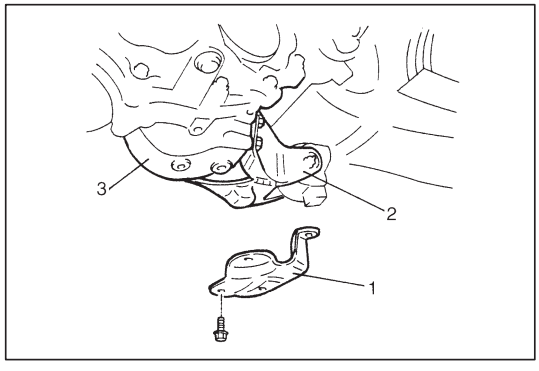

11) Remove engine rear mounting bracket stiffener (1).
12) Remove clutch housing lower plate.
13) Remove engine rear mounting No.1 bracket (2) with No.2 bracket (3).
14) Remove transmission to engine bolt and nut.
15) Lower vehicle and support transmission with transmission jack.

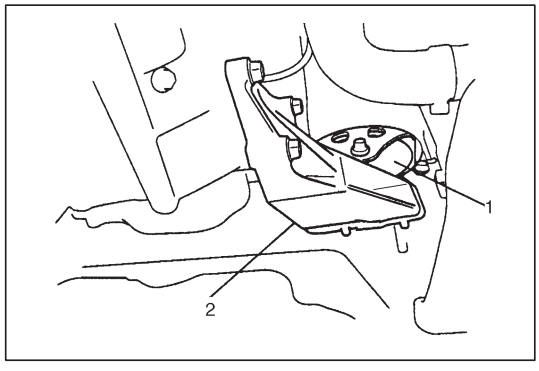

16) Remove engine left mounting (1) with bracket (2).
17) Remove other attached parts from transmission, if any.
18) Pull transmission out so as to disconnect input shaft from clutch disc and then lower it.

REMOUNTING

CAUTION:
Care should be taken not to scratch oil seal lip with drive shaft while raising transmission.
Do not hit drive shaft joint with hammer when installing it into differential gear.

Remount transmission in reverse order of dismounting procedure noting the following.

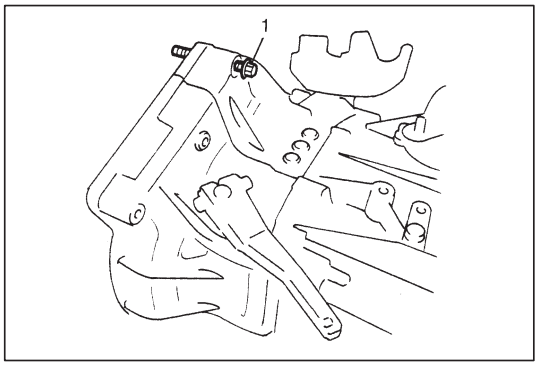

- Set bolt (1) to the original position of transmission before mounting transmission assembly to engine assembly.

- Refer to the first figure of UNIT REPAIR OVERHAUL for fastener specified torque.
- Push in drive shaft joints (right & left) fully so as to snap ring of shaft engages with differential gear.
- Set each clamp for wiring securely.
- After connecting clutch cable, be sure to adjust its play properly. Refer to SECTION 7C.
- Fill transmission with oil as specified.
- Connect battery and check function of engine, clutch and transmission.

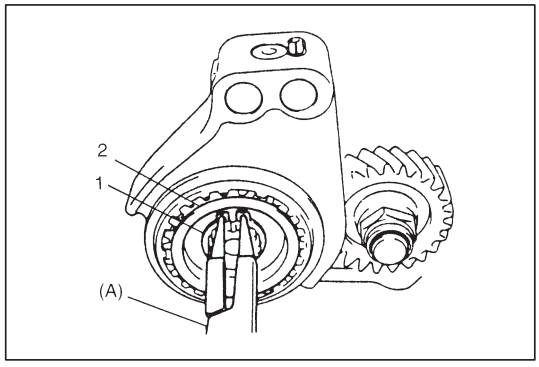

DISASSEMBLING UNIT

FIFTH GEARS

1) Remove side cover bolts and take off transmission side cover.

> **CAUTION:**
> **Care should be taken not to distort side cover when it is removed from left case.**

2) Using special tool, remove circlip (1) and then hub plate (2).
   Special Tool
   (A): 09900-06107

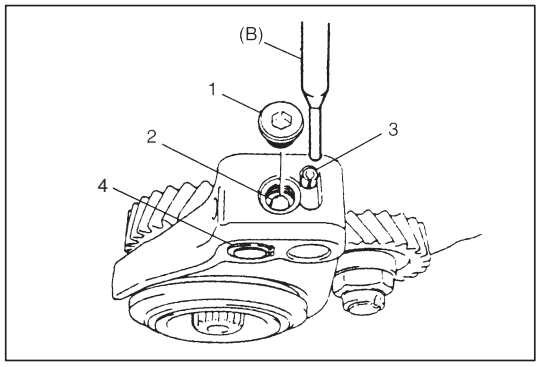

3) Remove shift fork plug (1) and guide ball (2).

   NOTE:
   Use of magnet would facilitate removal of guide ball.

4) Drive out spring pin (3) by using special tool and hammer.

   Special Tool
   (B): 09922-85811

5) Remove circlip (4) by using circlip plier.

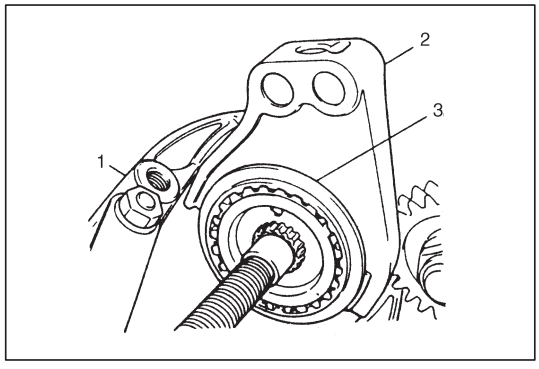

6) Remove gear shift fork (2), sleeve & hub assembly (3), synchronizer ring spring, synchronizer ring and 5th gear all together. Use gear puller (1) for removal if spline fitting of hub is tight.

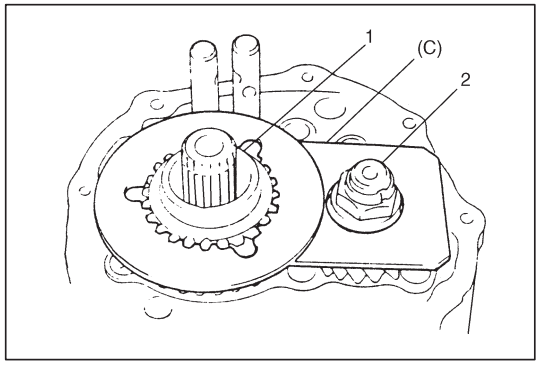

7) Unfasten caulking of countershaft nut, install input shaft 5th gear (1) and special tool to stop rotation of shafts, and then remove countershaft nut (2).

   Special Tool
   (C): 09927-76010

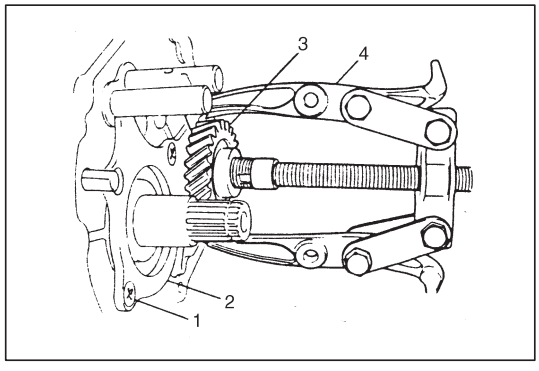

8) Remove special tool, input shaft 5th gear, needle bearing of separated steel cage type and then counter shaft 5th gear. Gear puller (4) would be necessary if spline fitting of counter shaft 5th gear (3) is tight.
9) Remove plate screws (1) and take off left case plate (2), and then bearing set shim.

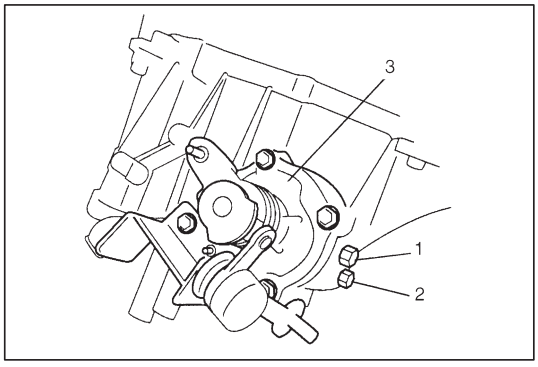

GEAR SHIFTER, INPUT SHAFT AND COUNTER SHAFT

1) Remove gear shift interlock bolt (1) and 5th to reverse interlock guide bolt (2) from transmission case.
2) Remove gear shifter assembly (3).

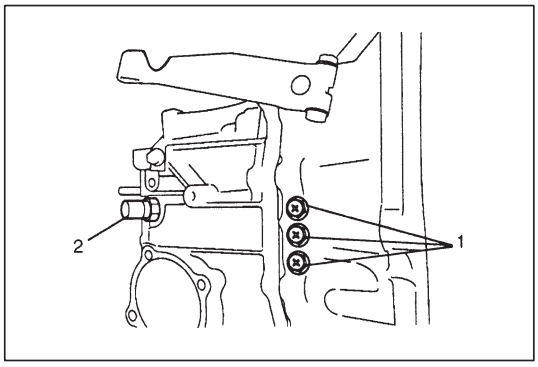

3) Remove gear shift locating bolts (1) with washers, then take out locating springs and steel balls.
4) Remove back up light switch (2).

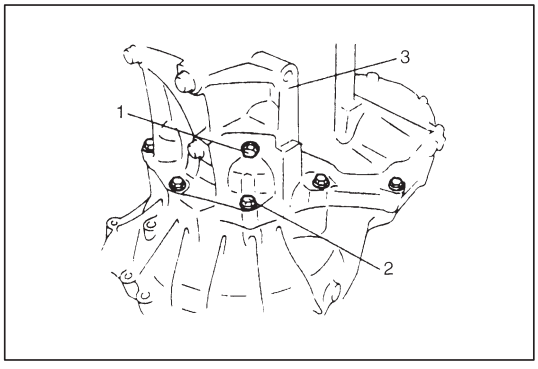

5) Remove reverse shaft bolt (1) with washer.
6) Remove case bolts (2) from outside and another bolts from clutch housing side.
7) Tapping left case (3) flanges with plastic hammer, remove left case.

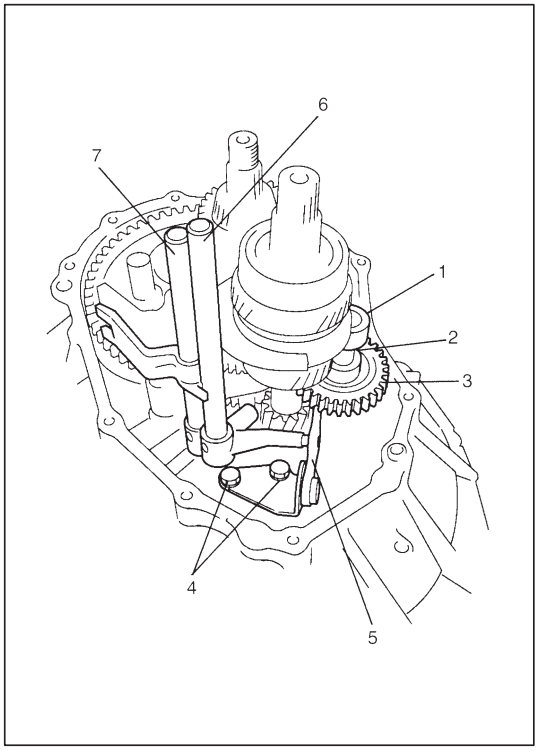

8) Pull out reverse gear shaft (1) with washer (2), then take off reverse idler gear (3).
9) Remove reverse gear shift lever bolts (4), and reverse gear shift lever (5).
10) Pull out 5th & reverse gear shift guide shaft (6) together with 5th & reverse gear shift shaft (7).

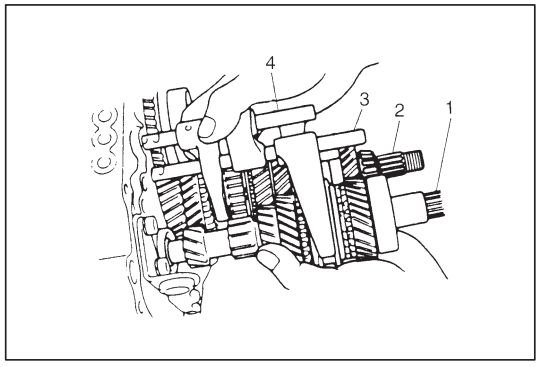

11) Tapping input shaft end with plastic hammer, push it out as assembly from case a little, then take out input shaft assembly (1), counter shaft assembly (2), high speed gear shift shaft (3) and low speed gear shift shaft (4) all at once.
12) Remove counter shaft left bearing cup from left case.
13) Remove differential side left oil seal also from left case.

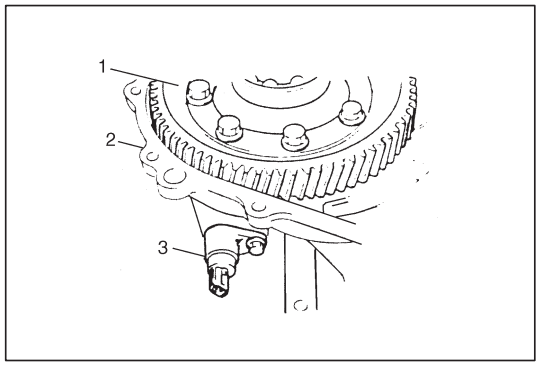

RIGHT CASE

1) Remove differential gear assembly (1) from right case (2).
2) Remove bolt and then pull out VSS (3).

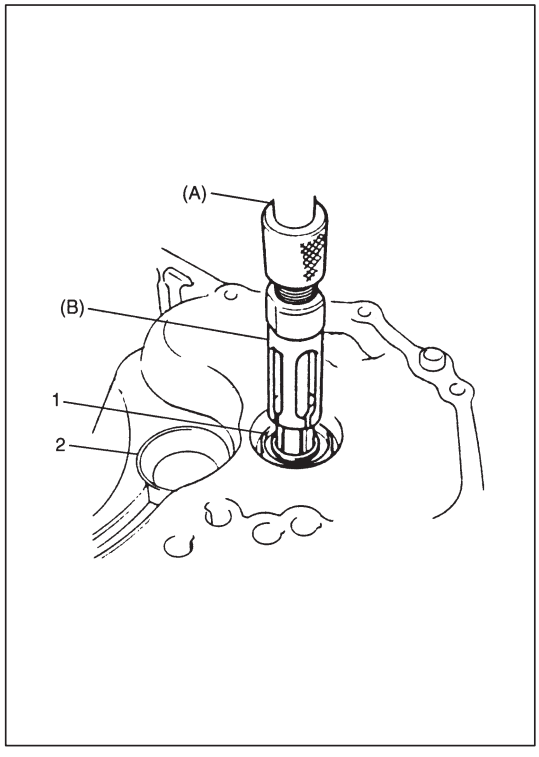

3) If input shaft right bearing has been left in right case, pull it out by using special tools.
   Remove input shaft oil seal (1) by using special tools.

   Special Tool
   (A): 09930-30102
   (B): 09923-74510

4) Also pull out countershaft right bearing cup (2) by using special tools (bearing remover 09941-64511 with sliding shaft 09930-30102).

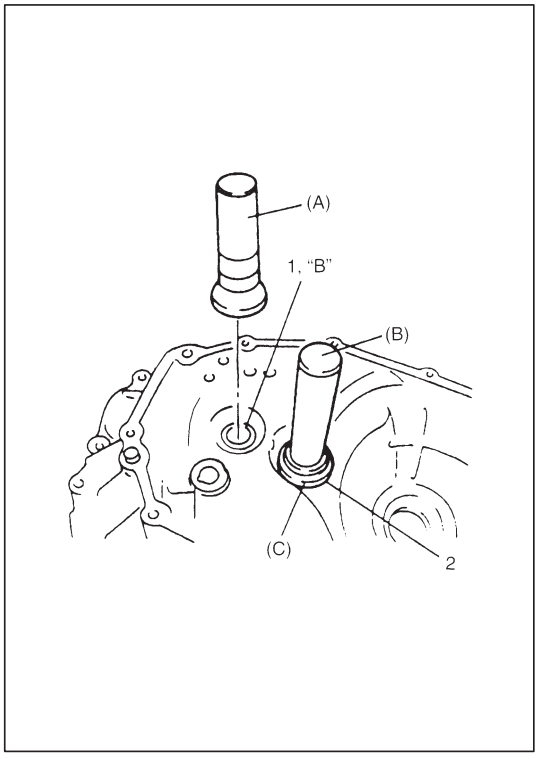

SUB ASSEMBLY SERVICE

NOTE:
Before installation, wash each part and apply specified gear oil to sliding faces of bearing and gear.

RIGHT CASE

1) Install input shaft oil seal (1) facing its spring side upward. Use special tool and hammer for installation and apply grease to oil seal lip.

   "B": SUZUKI SUPER GREASE A, 99000-25010

   Special Tool
   (A): 09951-76010

2) Install countershaft right bearing cup (2) by using special tools and hammer.

   Special Tool
   (B): 09924-74510
   (C): 09925-68210

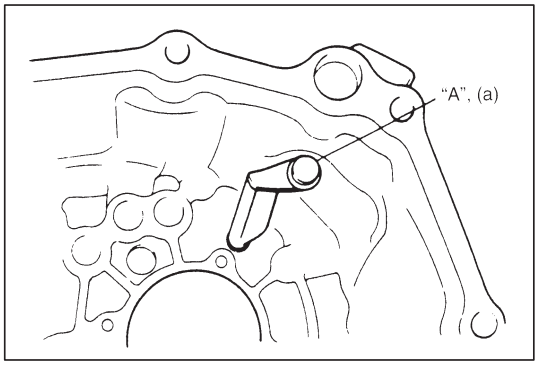

LEFT CASE

1) If input oil gutter has been removed, install it with bolt applied with thread lock cement.

   "A": Thread lock 1322, 99000-32110

   Tightening Torque
   (a): 10 N·m (1.0 kg-m, 7.5 lb-ft)

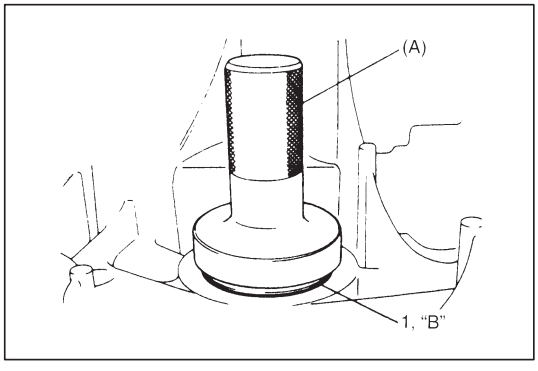

2) Install differential side left oil seal (1) facing its spring side inward until it becomes flush with case surface by using special tool with hammer, and then apply grease to its lip.

   "B": SUZUKI SUPER GREASE A, 99000-25010

   Special Tool
   (A): 09913-75510

3) Install counter shaft left bearing cup into case bore by tapping it with plastic hammer lightly.

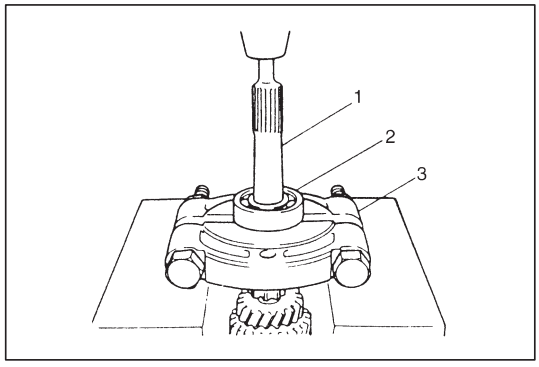

INPUT SHAFT ASSEMBLY

DISASSEMBLY

1) Remove input shaft right bearing (2) from input shaft (1) by using bearing puller (3) and press.

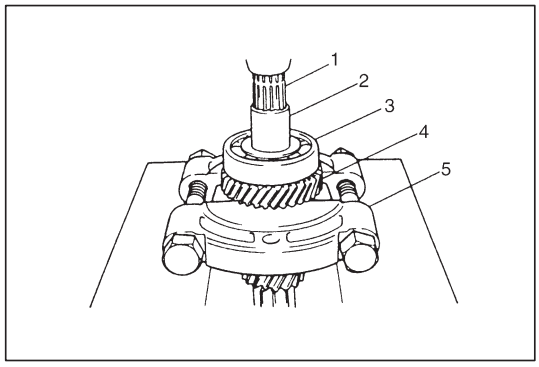

2) Drive out 5th gear spacer (2), left bearing (3) and 4th gear (4) all at once from input shaft (1) by using puller (5) and press.

> **CAUTION:**
> **To avoid gear tooth from being damaged, support it at flat side of bearing puller.**

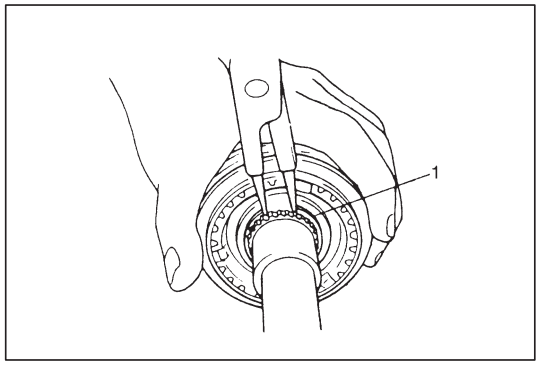

3) Take out 4th gear needle bearing and high speed synchronizer ring.
4) Using circlip pliers, remove circlip (1).

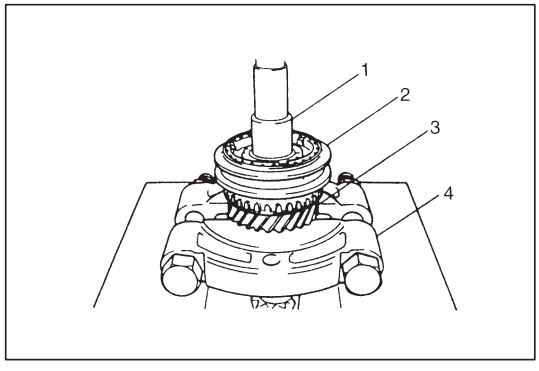

5) Drive out high speed synchronizer sleeve & hub assembly (2) together with 3rd gear (3) from input shaft (1) by using puller (4) and press.

> **CAUTION:**
> **Make sure to use flat side of puller to avoid causing damage to 3rd gear tooth.**

6) Take out 3rd gear needle bearing from shaft.
7) Disassemble synchronizer sleeve & hub assembly.

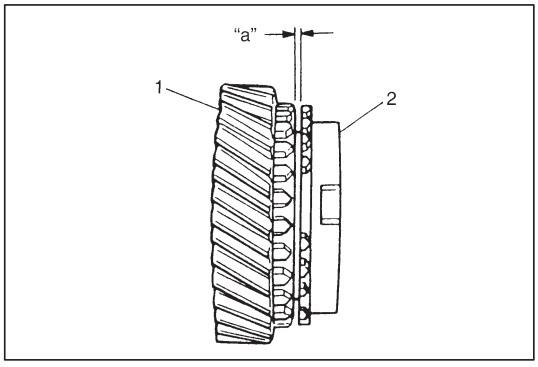

INSPECTION AND REASSEMBLY

1) Clean all components thoroughly, inspect them for any abnormality and replace with new ones as necessary.
2) If synchronizer parts need to be repaired, check clearance "a" between ring (2) and gear (1), each chamfered tooth of gear, ring and sleeve, then determine parts replacement.

Clearance "a": Standard 1.0 – 1.4 mm (0.039 – 0.055 in.)
Service limit 0.5 mm (0.019 in.)

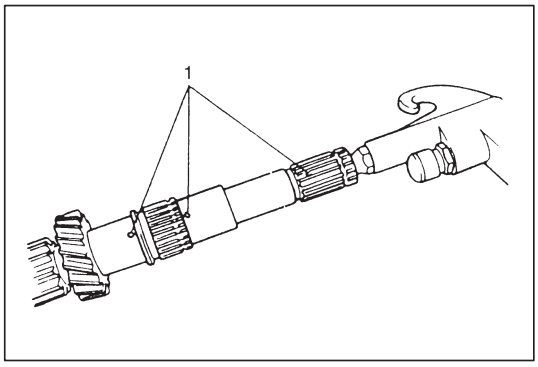

3) To ensure lubrication, air blow oil holes (1) and make sure that they are free from any obstruction.

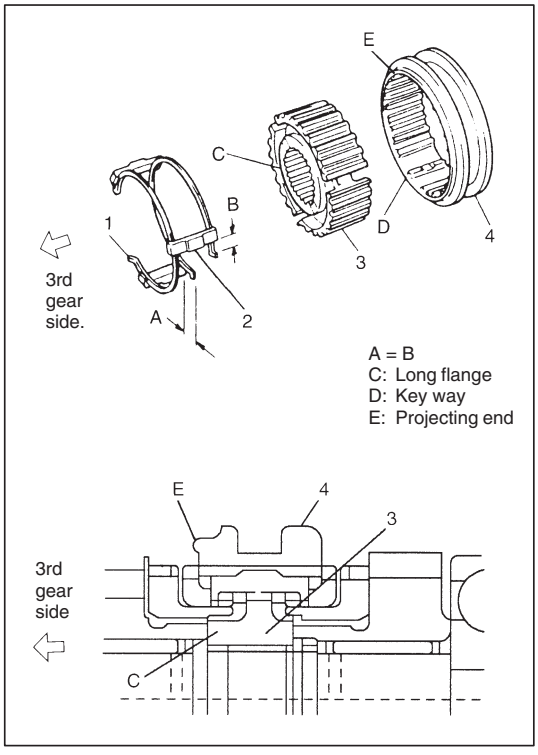

4) Fit high speed synchronizer sleeve (4) to hub (3), insert 3 keys (2) in it and then set springs (1) as shown in figure.

NOTE:
- **No specific direction is assigned to each key but it is assigned as sleeve & hub assembly.**
- **Size of high speed synchronizer sleeve, hub, keys and springs is between those of low speed and 5th speed ones.**

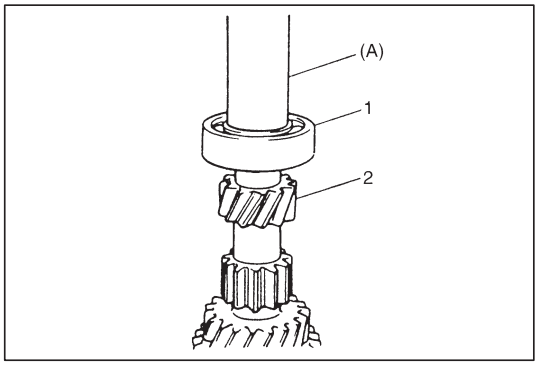

5) Drive in right bearing (1) to input shaft (2) by using special tool and hammer.

Special Tool
(A): 09913-80112

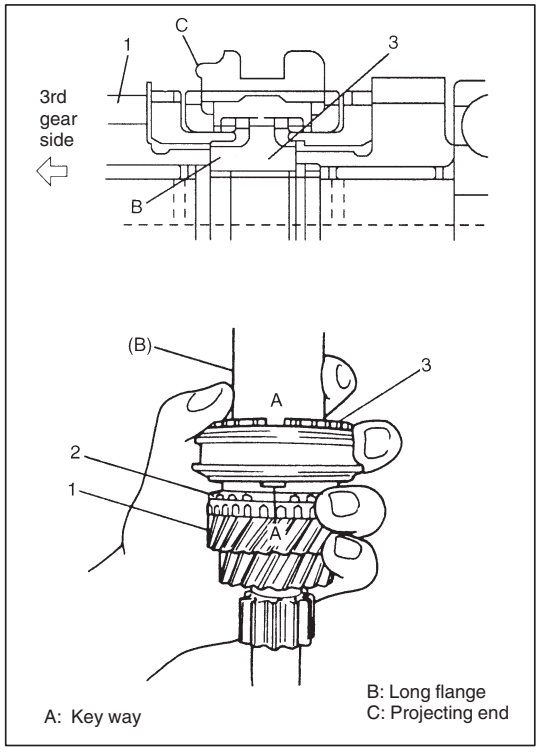

6) Install 3rd gear needle bearing of resin cage type, apply oil to it, then install 3rd gear (1) and synchronizer ring (2).
7) Drive in high speed sleeve & hub assembly (3) by using special tool and hammer, facing long flange side of hub to 3rd gear.

NOTE:
- **While press-fitting sleeve & hub, make sure that synchronizer ring key slots are aligned with keys in sleeve & hub assembly.**
- **Check free rotation of 3rd gear after press-fitting sleeve & hub assembly.**
- **Synchronizer rings for 3rd and 4th are identical.**

Special Tool
(B): 09913-84510

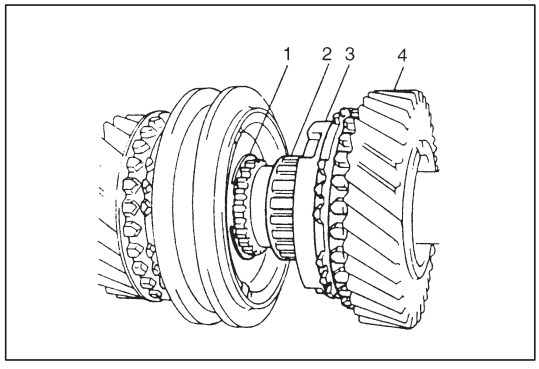

8) Install circlip (1) and confirm that circlip is installed in groove securely.
Install needle bearing (2) of steel cage type, apply oil to bearing and then install synchronizer ring (3) and 4th gear (4).

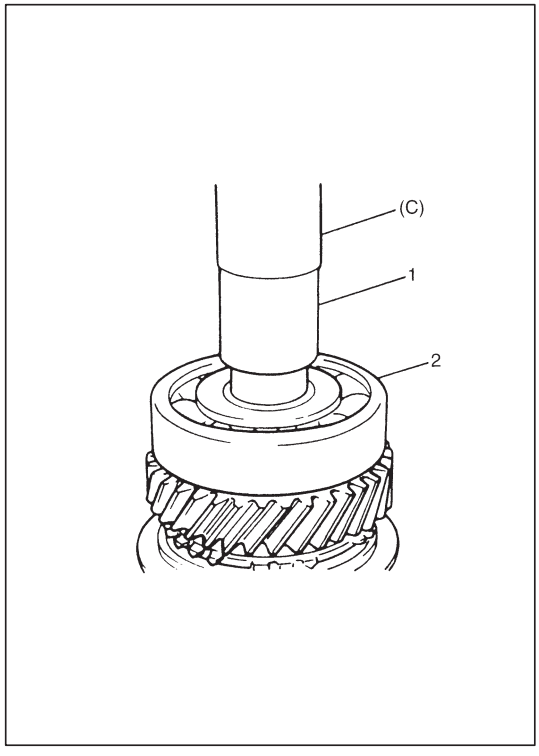

9) Press-fit left bearing (2) by using special tool and hammer.

Special Tool
(C): 09925-98221

10) Using the same special tool, drive in 5th gear spacer (1).

CAUTION:
To prevent 5th gear spacer from being distorted because of excessive compression, do not press-fit it with left bearing at once.

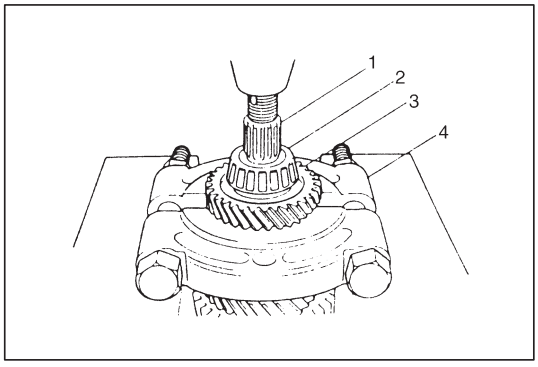

COUNTER SHAFT ASSEMBLY

DISASSEMBLY

1) Drive out left bearing cone (2) with 4th gear (3) from counter shaft (1) by using puller (4) and press.

> **CAUTION:**
> - **Use puller and press that will bear at least 5 ton (11,000 lb) safely.**
> - **To avoid tooth damage, support 4th gear at flat side of puller.**

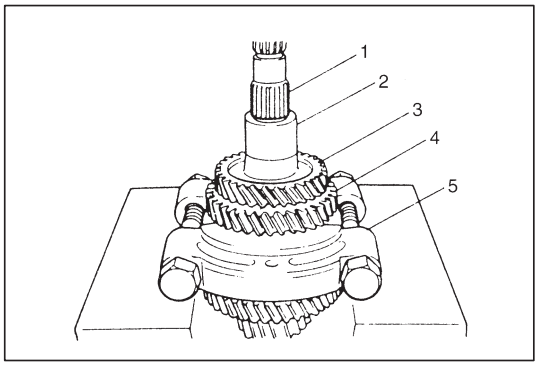

2) Apply puller (5) to 2nd gear (4) and drive out 3rd & 4th gear spacer (2) and 3rd gear (3) together with 2nd gear from counter shaft (1) by using press. Take out needle bearing of separated steel cage type from counter shaft.

> **CAUTION:**
> - **If compression exceeds 5 ton (11,000 lb), release compression once, reset puller support and then continue press work again.**
> - **To avoid gear tooth from being damaged, support it at flat side of bearing puller.**

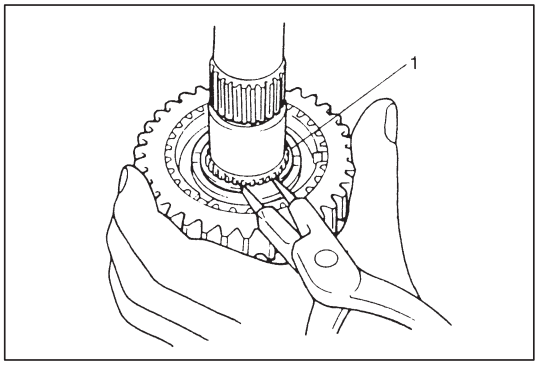

3) Take out 2nd synchronizer outer ring, center cone and inner ring.
4) Using circlip pliers, remove circlip (1).

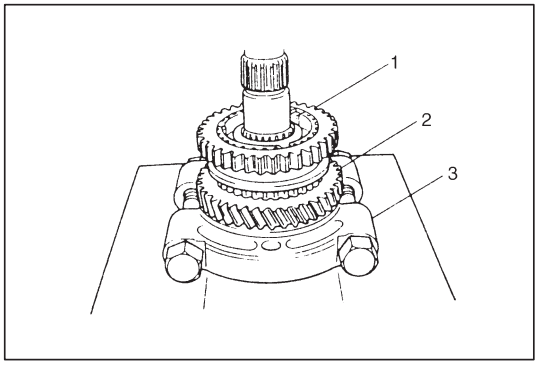

5) Apply puller (3) to 1st gear (2) and drive out low speed synchronizer sleeve & hub assembly (1) with gear by using press.

> **CAUTION:**
> **To avoid gear tooth from being damaged, support it at flat side of bearing puller.**

6) Disassemble synchronizer sleeve & hub assembly.
7) Take out needle bearing from shaft.

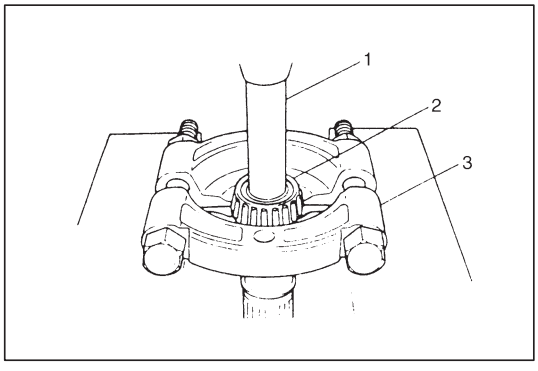

8) Remove right bearing cone (2) by using puller (3), metal stick (1) and press.

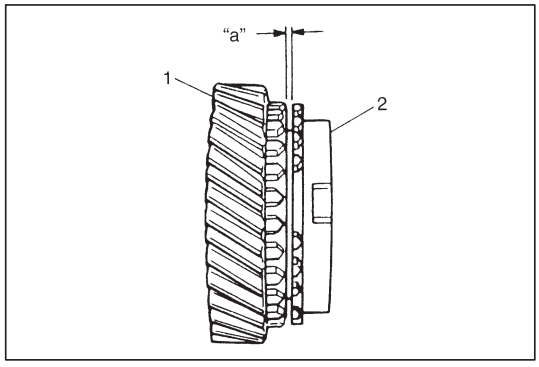

INSPECTION AND REASSEMBLY

1) Clean all components thoroughly, inspect them for any abnormality and replace with new ones as necessary.
2) If synchronizer parts need to be repaired, check clearance "a" between ring (2) and gear (1), each chamfered tooth of gear, ring and sleeve, then determine parts replacement.

Clearance "a": Standard 1.0 – 1.4 mm (0.039 – 0.055 in.)
Service limit 0.5 mm (0.019 in.)

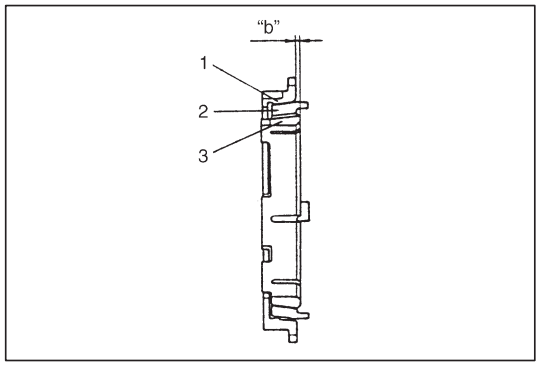

3) Put the synchronizer outer ring (1), inner ring (3) and the cone (2) together and then measure the step difference between the outer ring and the inner ring. And also check each chamfered tooth of gear and synchronizer ring and replace with new one, if necessary. Also, check gear tooth.

Difference "b": Standard 1.0 – 1.4 mm (0.039 – 0.055 in.)
Service limit 0.5 mm (0.019 in.)

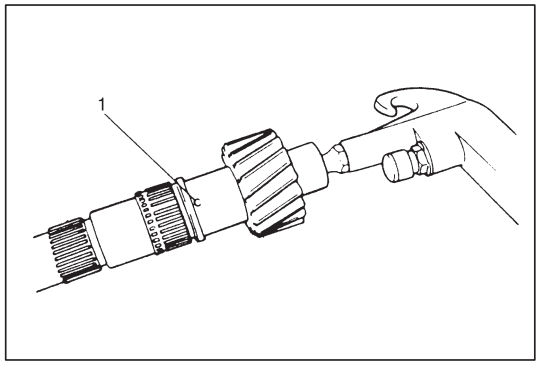

4) To ensure lubrication, air blow oil holes (1) and make sure that they are free from any obstruction.

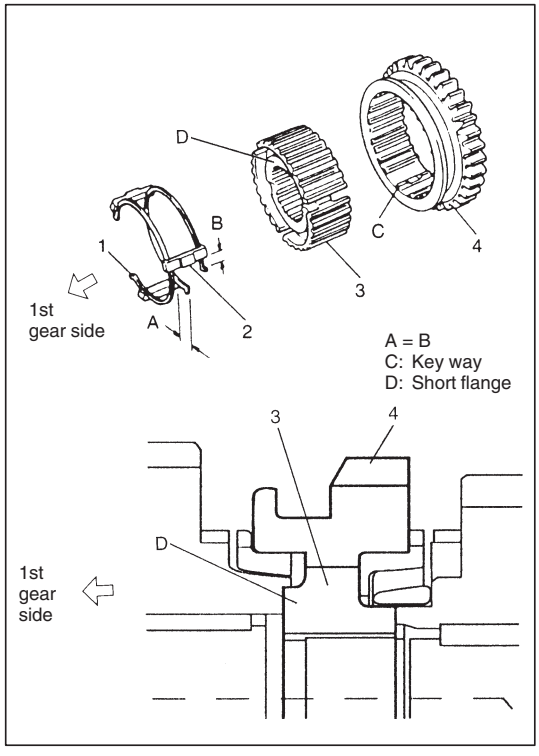

5) Fit low speed synchronizer sleeve (4) to hub (3), insert 3 keys (2) in it and then set springs (1) as shown in figure.

NOTE:
- **No specific direction is assigned to each key but it is assigned as sleeve & hub assembly.**
- **Size of low speed synchronizer keys and springs are the largest compared with those of high speed and 5th speed ones.**

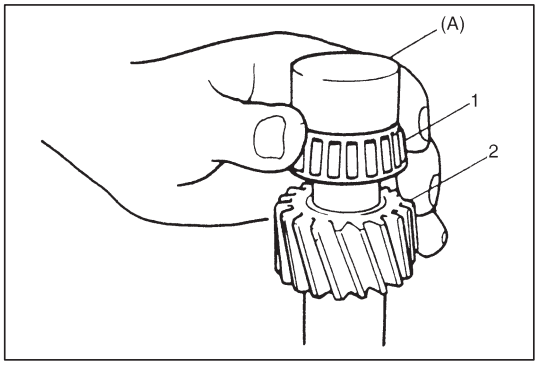

6) Install right bearing cone (1) to counter shaft (2) by using special tool and hammer.

Special Tool
(A): 09923-78210

7) Install needle bearing of resin cage type, apply oil to it, then install 1st gear and 1st gear synchronizer ring.

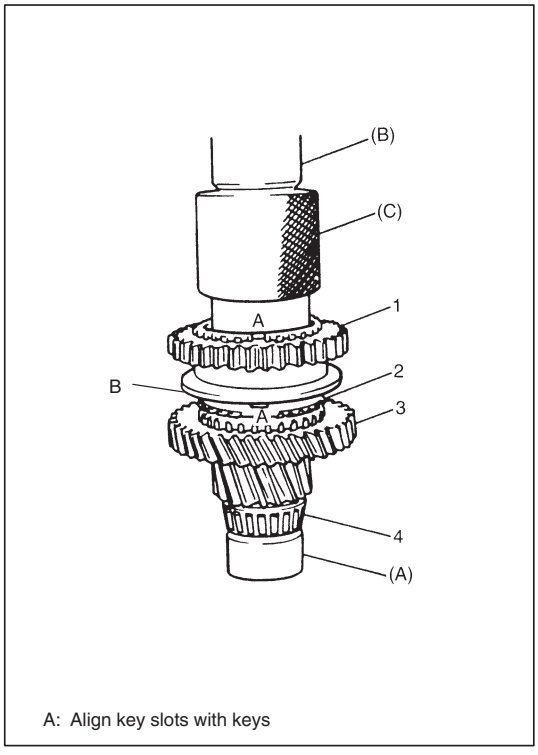

8) Drive in low speed sleeve & hub assembly (1) by using special tools and hammer, facing “B” side of sleeve to 1st gear.

NOTE:
- **Support shaft with special tool as shown in figure so that retainer of bearing cone (4) will be free from compression.**
- **Make sure that synchronizer ring (2) key slots are aligned with keys while press-fitting sleeve & hub assembly.**
- **Check free rotation of 1st gear (3) after press-fitting sleeve & hub assembly.**

Special Tool
(A): 09923-78210
(B): 09925-18010
(C): 09940-53111

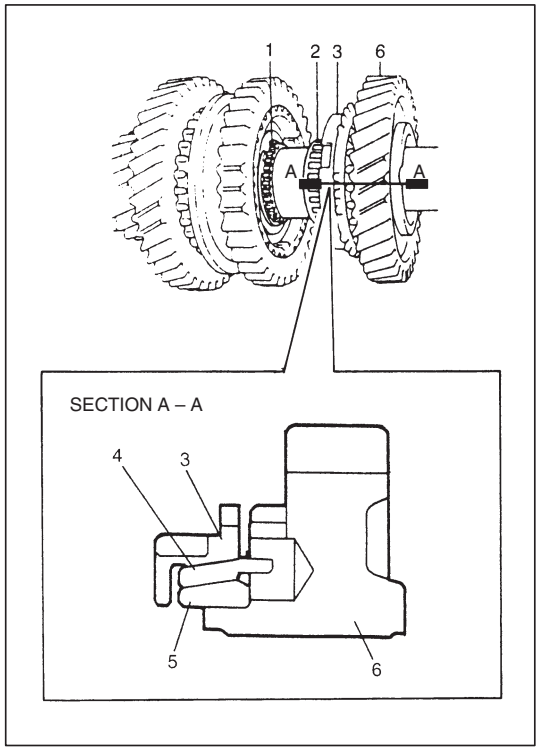

9) Install circlip (1) and confirm that circlip is installed in groove securely.
Install needle bearing (2) of separated steel cage type, apply oil to bearing.
With synchronizer outer ring (3), center cone (4) & inner ring (5) put together and installed to 2nd gear (6) as shown in figure.

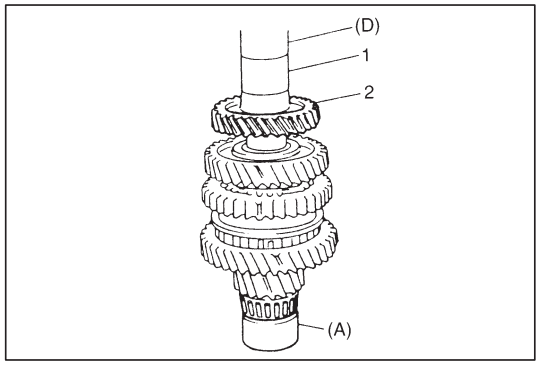

10) Press-fit 3rd gear (2) and spacer (1) by using special tools and press.

CAUTION:
Press-fit 3rd gear and spacer first, and then 4th gear later separately so that counter shaft will not be compressed excessively.

Special Tool
(A): 09923-78210
(D): 09913-80112

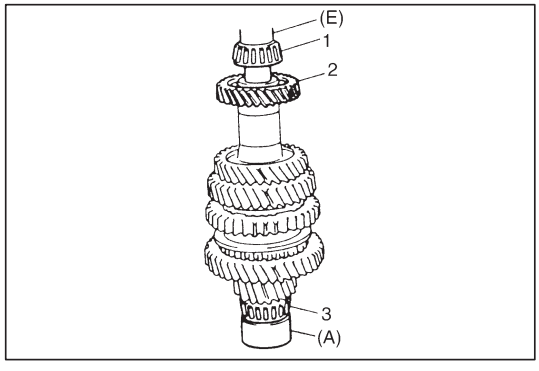

11) Press-fit 4th gear (2) by using the same procedure as the above.
12) Install left bearing cone (1) by using special tools and hammer.

NOTE:
For protection of right bearing cone (3), always support shaft with special tool as illustrated.

Special Tool
(A): 09923-78210
(E): 09925-98221

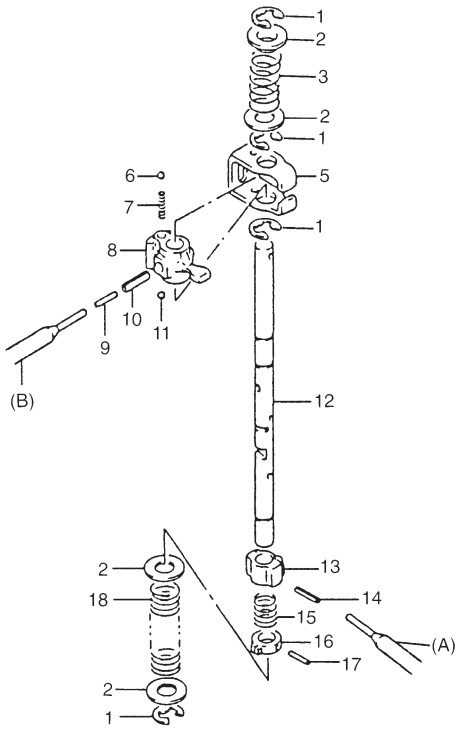

1. E-ring
2. Washer
3. Reverse select spring
4. Blank
5. Gear shift interlock plate
6. Ball
7. Gear shift interlock spring
8. Gear shift & select lever
9. Spring pin
10. Spring pin
11. Ball
12. Gear shift & select shaft
13. 5th & reverse gear shift cam
14. Spring pin
15. Cam guide return spring
16. 5th & reverse gear shift cam guide
17. Spring pin
18. Low speed select spring

GEAR SHIFTER

GEAR SHIFT AND SELECT SHAFT ASSEMBLY

1) To disassemble component parts, use special tools and 2.8 – 3.0 mm (0.11 in.) pin remover in addition.

   Special Tool
   (A): 09922-85811(4.5 mm)
   (B): 09925-78210 (6.0 mm)

2) Clean all parts thoroughly, inspect them and replace with new ones as required.
3) Assemble component parts by reversing removal procedure.

   NOTE:
   - **When driving in spring pins, prevent shaft from being bent by supporting it with wood block.**
   - **Assemble 5th & reverse gear shift cam by winding cam guide return spring, and then drive in spring pin.**
   - **Distinguish low speed spring (No paint) (18) from reverse select spring (Pink) (3).**

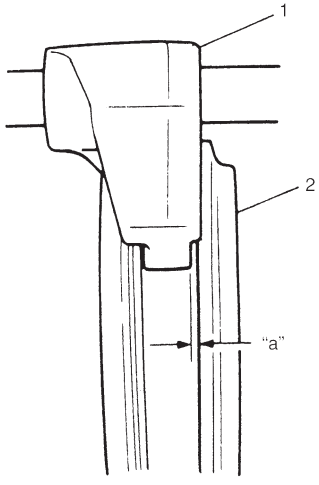

HIGH SPEED AND LOW SPEED GEAR SHIFT SHAFTS

INSPECTION

1) Using feeler gauge, check clearance between fork (1) and sleeve (2) and replace those parts if it exceeds limit below.

   NOTE:
   For correct judgement of parts replacement, carefully inspect contact portion of fork and sleeve.

   Clearance "a": Service limit 1.0 mm (0.039 in.)

2) Insert each gear shift shaft into case and check that it moves smoothly. If it doesn't, correct by using oilstone, reamer or the like.

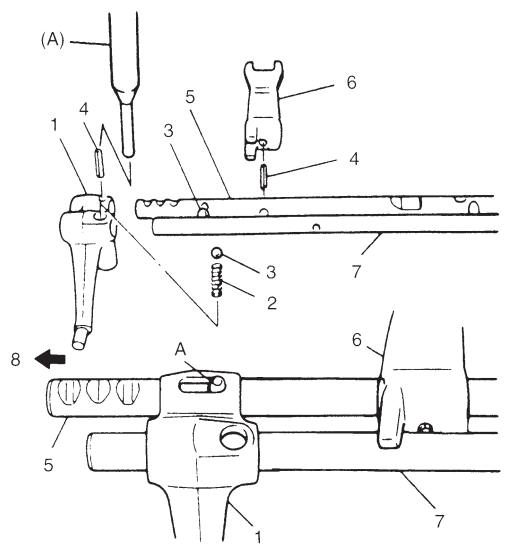

1. Reverse gear shift arm
2. Reverse gear shift arm spring (Blue)
3. Steel ball
4. Spring pin
5. 5th & reverse gear shift shaft
6. 5th & reverse gear shift yoke
7. 5th & reverse gear shift guide shaft
8. 5th gear side

A: Face pin slit toward 5th gear side

5TH & REVERSE GEAR SHIFTER

1) Disassemble component parts by using special tool and hammer.

Special Tool
(A): 09922-85811 (4.5 mm)

2) Replace or correct parts as required and assemble shafts making sure that component parts are in proper order as shown in figure.

NOTE:
- **Distinguish reverse gear shift arm spring (Blue) (2) from low speed locating spring (Yellow).**
- **Install 2 steel balls (3) in reverse gear shift arm (1) without fail.**
- **Drive in spring pin for reverse shift arm facing slit A toward front.**

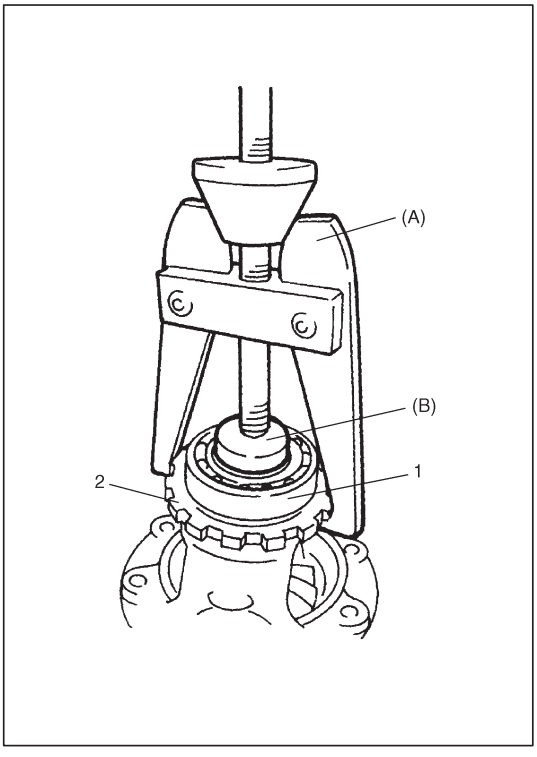

DIFFERENTIAL ASSEMBLY

DISASSEMBLY

1) Using special tools, remove right bearing (1) and sensor rotor (2).

Special Tool
(A): 09913-60910
(B): 09925-88210

2) Remove left bearing in the same manner.
3) Support differential case with soft jawed vise and remove final gear bolts then take out final gear.

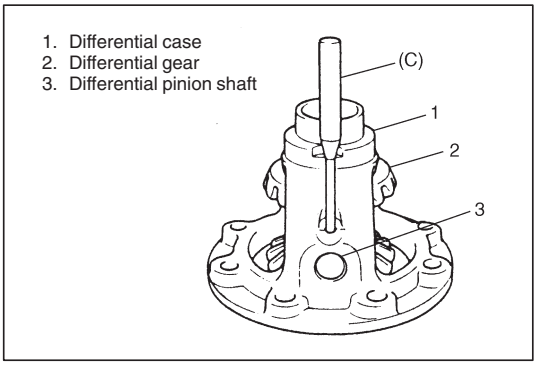

4) Using special tool and hammer, drive out differential side pinion shaft pin and then disassemble component parts.

Special Tool
(C): 09922-85811 (4.5 mm)

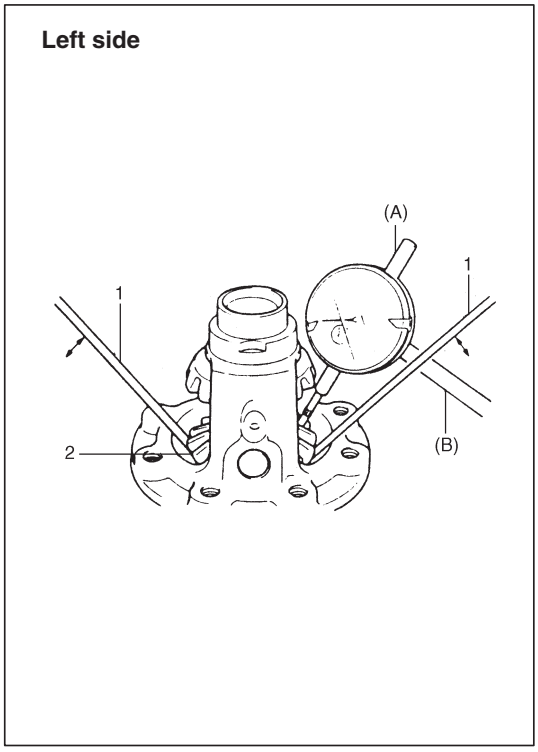

ADJUSTMENT AND REASSEMBLY

Judging from abnormality noted before disassembly and what is found through visual check of component parts after disassembly, prepare replacing parts and proceed to reassembly. Make sure that all parts are clean.

1) Assemble differential gear and measure thrust play of differential gear as follows.

Special Tool
(A): 09900-20606
(B): 09900-20701

Differential gear thrust play:
0.03 – 0.31 mm (0.001 – 0.012 in.)

Left side
- Hold differential assembly with soft jawed vise and apply measuring tip of dial gauge to top surface of gear.
- Using 2 screwdrivers (1), move gear (2) up and down and read movement of dial gauge pointer.

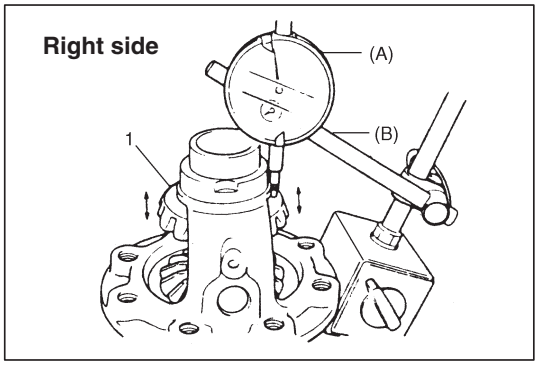

Right side
- Using similar procedure to the above, set dial gauge tip to gear (1) shoulder.
- Move gear up and down by hand and read dial gauge.

2) If thrust play is out of specification, select suitable thrust washer from among the following available size, install it and check again that specified gear play is obtained.

Available thrust washer thickness	0.9, 0.95, 1.0, 1.05, 1.1, 1.15 and 1.2 mm (0.035, 0.037, 0.039, 0.041, 0.043, 0.045, and 0.047 in.)

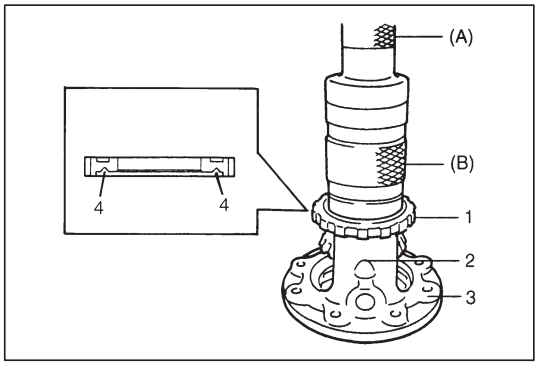

3) Drive in differential side pinion shaft pin (2) till the depth from differential case (3) surface is about 1 mm (0.04 in.).
4) Press-fit new sensor rotor (1) with groove (4) side downward as shown by using special tools and copper hammer.

Special Tool
(A): 09913-75510
(B): 09940-54910

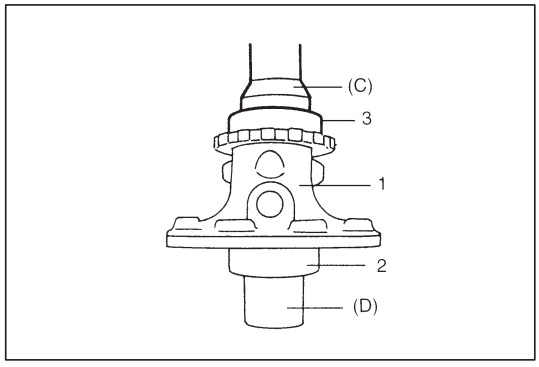

5) Press-fit left bearing by using special tools and copper hammer.
6) Support differential assembly (1) as illustrated so as to left bearing (2) is floating, and then press-fit right bearing (3) like left bearing in Step 5).

Special Tool
(C): 09951-76010
(D): 09951-16060

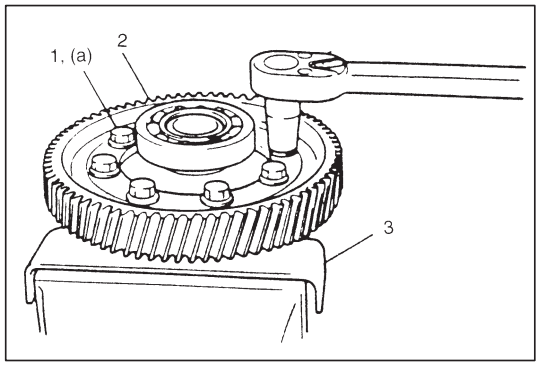

7) Hold differential assembly with soft jawed vise (3), install final gear (2) and then tighten bolts (1) to specified torque.

CAUTION:
Use of any other bolts than specified ones is prohibited.

Tightening Torque
(a): 85 N·m (8.5 kg-m, 61.5 lb-ft)

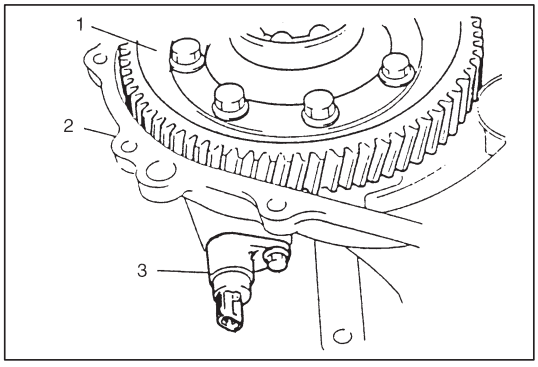

ASSEMBLING UNIT

DIFFERENTIAL TO LEFT CASE

1) Install differential assembly (1) into right case (2).
2) Insert VSS (3) applied with oil to its O-ring, then tighten it with bolt.

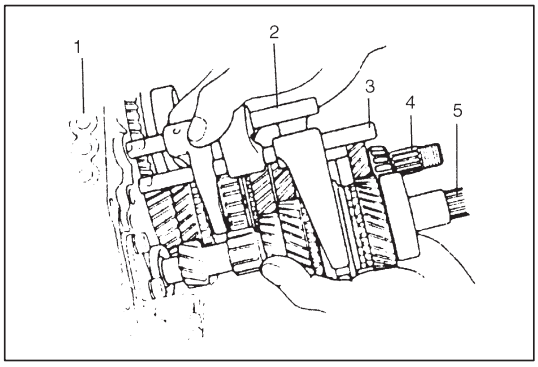

3) Join input shaft (5), countershaft (4), low speed gear shift shaft (2) and high speed gear shift shaft (3) assemblies all together, then install them into right case (1).

NOTE:
- **Input shaft right bearing on shaft can be installed into right case by tapping shaft with plastic hammer.**
- **Check to make sure that counter shaft is engaged with final gear while installing.**

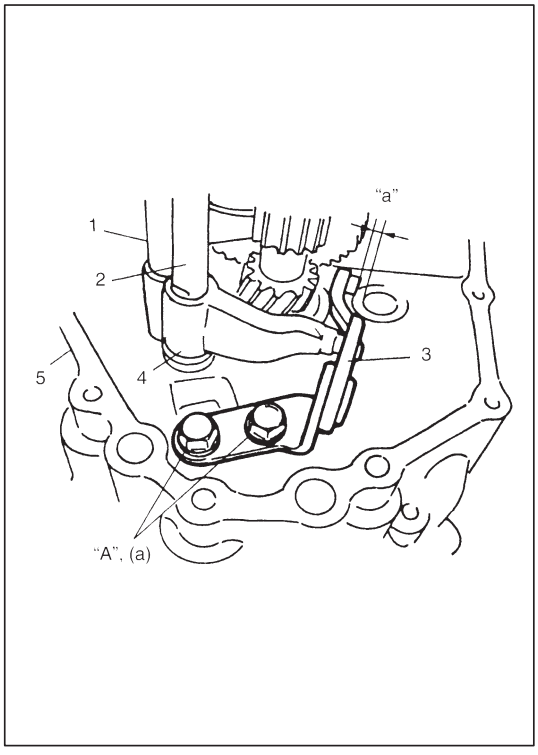

4) Install 5th & reverse gear shift shaft (1) with 5th & reverse gear shift guide shaft (2) into right case (5). Reverse gear shift arm (4) has to be joined with reverse gear shift lever (3) at the same time.
5) Place reverse gear shift lever, fasten it with bolts after applying thread lock cement.

"A": Thread lock cement, 99000-32110

Tightening Torque
(a): 23 N·m (2.3 kg-m, 17.0 lb-ft)

NOTE:
- **When installing reverse gear shift lever, set distance "a" between lever end and shaft bore to be 5 mm (0.2 in.).**

  Distance "a": 5 mm (0.2 in.)

- **Distance "a" can be measured by installing reverse gear shaft provisionally.**
- **When "a" is 5 mm (0.2 in.), clearance between reverse idler gear groove and shift lever end will be 1 mm (0.04 in.).**

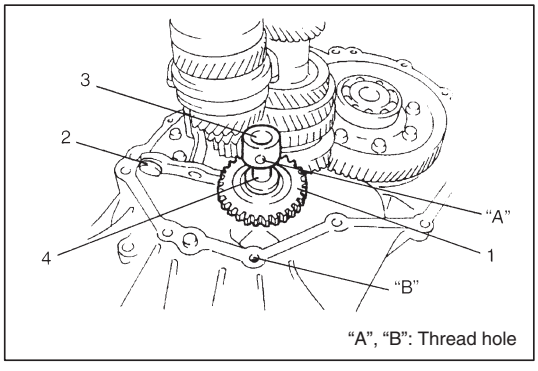

6) Make reverse idler gear (1) with reverse gear shift lever (2), insert reverse gear shaft (3) into case through idler gear and then align "A" in shaft with "B" in case.

NOTE:
- **Make sure that washer (4) has been installed in shaft at above the gear.**
- **Check to confirm that reverse gear shift lever end has clearance 1 mm (0.04 in.) to idler gear groove.**

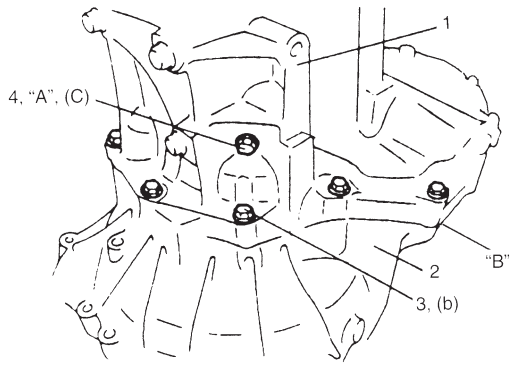

7) Clean mating surfaces of both right and left cases, coat mating surface of left case (1) with sealant evenly then mate it with right case (2).

"B": Sealant, Bond No.1215, 99000-31110

8) Tighten case bolts (3) from left case side to specified torque.

Tightening Torque
(b): 19 N·m (1.9 kg-m, 14.0 lb-ft)

9) Install reverse shaft bolt (4) applied with thread lock cement with aluminum washer and tighten it.

"A": Thread lock 1322, 99000-32110

Tightening Torque
(c): 23 N·m (2.3 kg-m, 17.0 lb-ft)

10) Install another case bolts from clutch housing side and tighten them to specification.

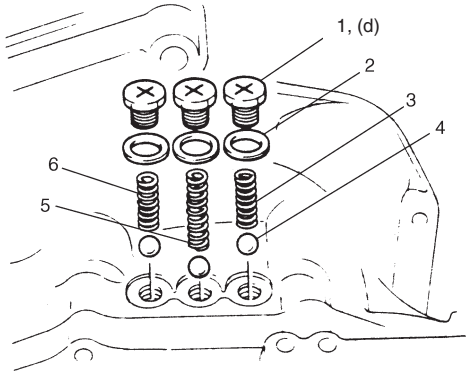

11) Check locating spring for deterioration and replace with new one as necessary.

Locating spring free length	Standard	Service Limit
Low speed (3) and 5th & reverse (6)	26.1 mm (1.028 in.)	25.0 mm (0.984 in.)
High speed (5)	40.1 mm (1.579 in.)	39.0 mm (1.535 in.)

12) Install steel ball (4) and locating spring for respective gear shift shaft and tighten with bolt (1) and washer (2).

Tightening Torque
(d): 13 N·m (1.3 kg-m, 9.5 lb-ft)

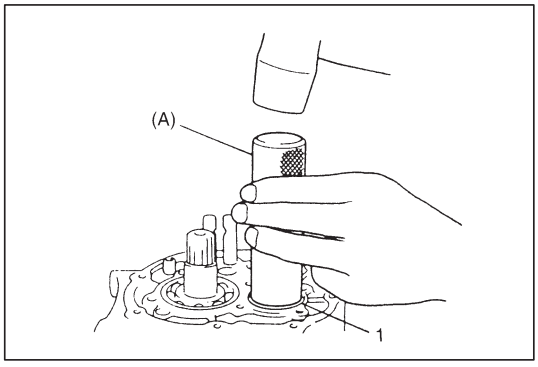

FIFTH GEARS

1) To seat countershaft left bearing cup (1) to bearing cone, tap cup by using special tool and plastic hammer.

Special Tool
(A): 09913-84510

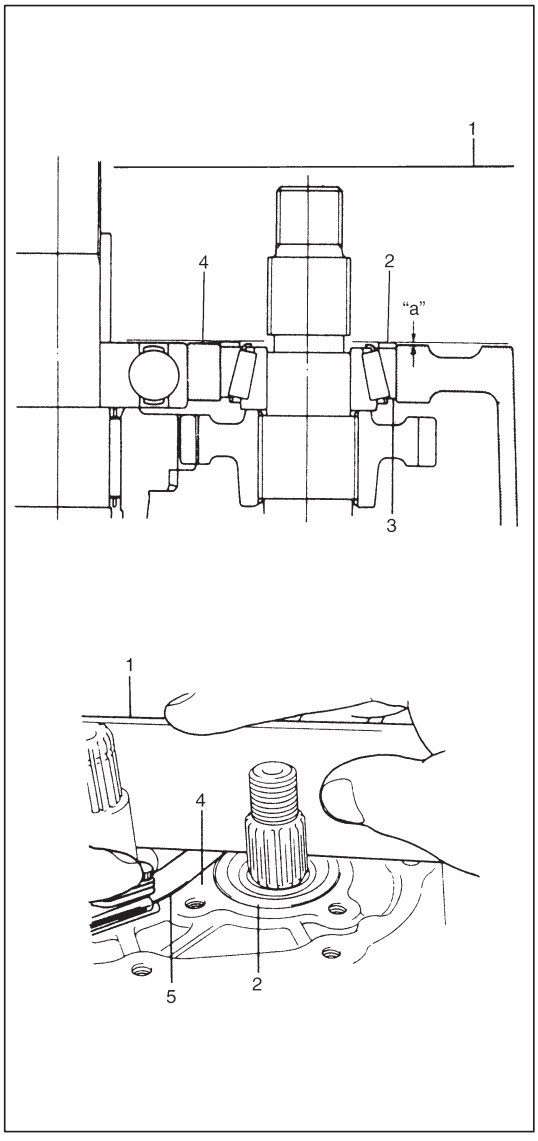

2) Put a shim (2) on bearing cup (3) provisionally, place straight edge (1) over it and compress it by hand through straight edge, and then measure "a" (Clearance between case surface (4) and straight edge) by using feeler gauge (5).

Clearance "a": 0.08 – 0.12 mm (0.0032 – 0.0047 in.)
(Shim protrusion)

3) By repeating above step, select a suitable shim which adjusts clearance "a" to specification and put it on bearing cup.

NOTE:
Insert 0.1 mm (0.004 in.) feeler to know whether or not a shim fulfills specification quickly.

Available shim thickness	0.40, 0.45, 0.50, 0.55, 0.6, 0.65, 0.7, 0.75, 0.8, 0.85, 0.9, 0.95, 1.0, 1.05, 1.1 and 1.15 mm (0.015, 0.017, 0.019, 0.021, 0.023, 0.025, 0.027, 0.029, 0.031, 0.033, 0.035, 0.037, 0.039, 0.041, 0.043 and 0.045 in.)

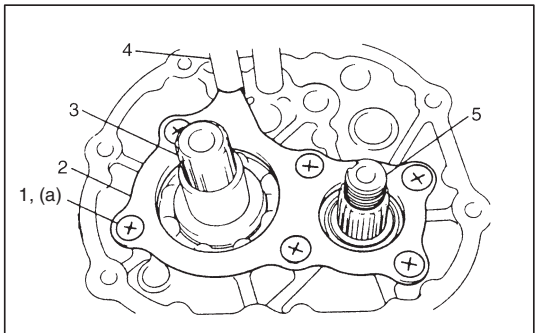

3. Input shaft

4) Place left case plate (2) inserting its end in groove of shift guide shaft (4) and then tighten it with new screws (1).

CAUTION:
Be sure to use new screws with pre-coating adhesive. Otherwise, screws may loosen.

NOTE:
After tightening screws, make sure that counter shaft (5) can be rotated by hand feeling some load.

Tightening Torque
(a): 9 N·m (0.9 kg-m, 6.5 lb-ft)

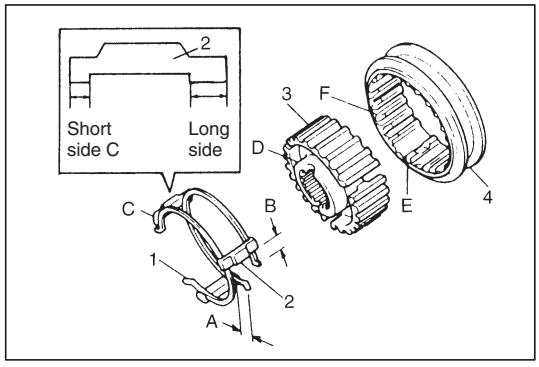

5) Assemble 5th speed synchronizer sleeve (4) and hub (3) with keys (2) and springs (1).

NOTE:
Short side C in keys, long flange D in hub and chamfered spline F in sleeve should face inward (5th gear side).

A = B
C: Short side (Inward)
D: Long flange (Inward)
E: Key way
F: Chamfered spline (Inward)

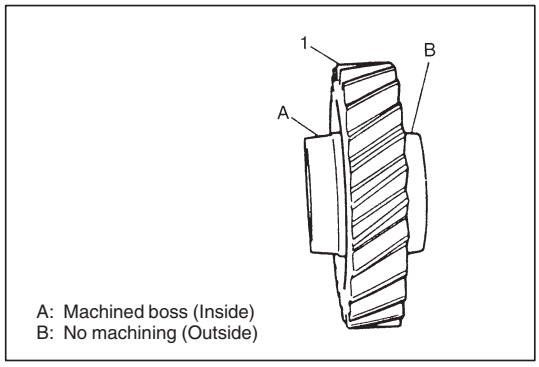

6) Install 5th gear (1) to counter shaft facing machined boss A inward.

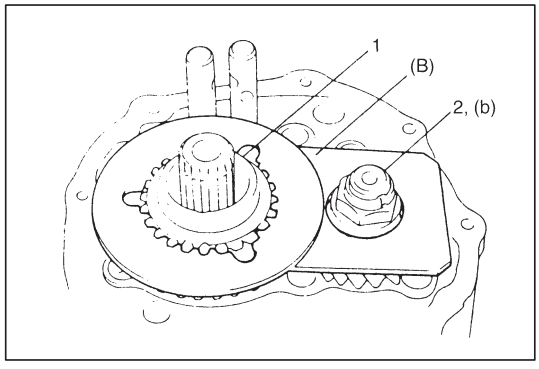

7) Install needle bearing of separated steel cage type to input shaft, apply oil then install 5th gear (1) and special tool to stop shaft rotation.

Special Tool
(B): 09927-76010

8) Install new countershaft nut (2) and tighten it to specification.

Tightening Torque
(b): 70 N·m (7.0 kg-m, 51.0 lb-ft)

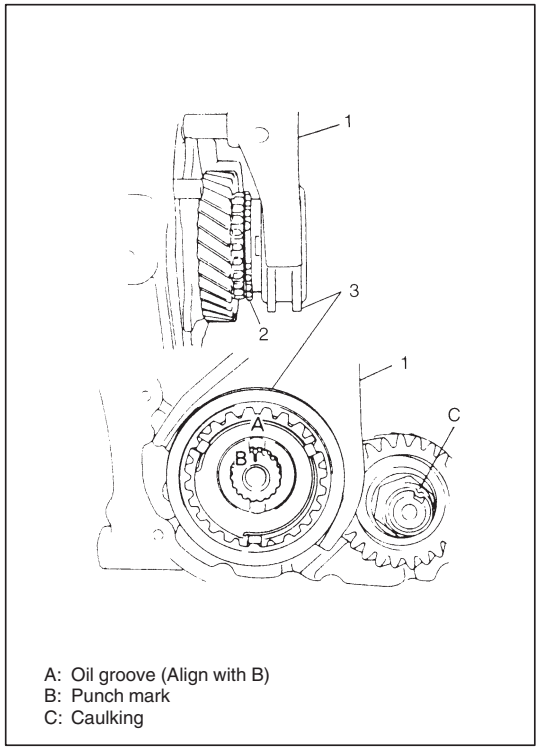

9) Remove special tool, then caulk nut at C with caulking tool and hammer.
10) Install synchronizer ring (2).
11) Fit 5th gear shift fork (1) to sleeve & hub assembly (3) and install them into input shaft, shift shaft and shift guide shaft at once aligning hub oil groove A with shaft mark B.

NOTE:
Long flange of hub faces inward (gear side).

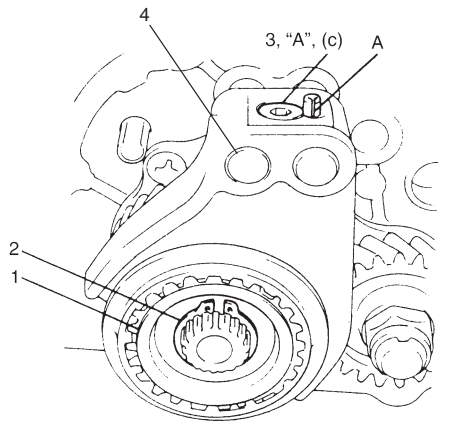

A: Pin slit (Face outward)

12) Drive in spring pin facing its slit A outward.
13) Install steel ball, tighten shift fork plug (3) applied with thread lock cement.

“A”: Thread lock 1322, 99000-32110

Tightening Torque
(c): 10 N·m (1.0 kg-m, 7.5 lb-ft)

14) Fit hub plate (1) and fix it with circlip (2).
15) Install circlip (4) to the end of 5th & reverse gear shift guide shaft.

CAUTION:
- **Coat shift fork plug with thread lock cement reasonably. If it is done to much, excess may interfere in ball movement and cause hard shift to 5th speed.**
- **Make sure circlip is installed in shaft groove securely.**

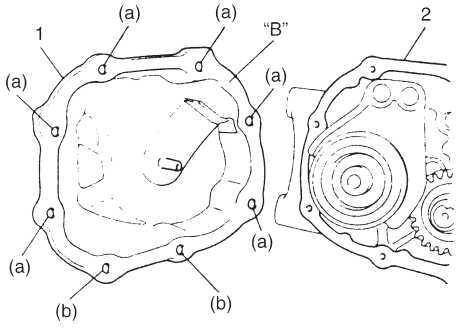

16) Clean mating surface of both left case (2) and side cover (1), coat mating surface with sealant evenly, mate it with left case and then tighten bolts.

“B”: Sealant Bond No. 1215, 99000-31110

Tightening Torque:
(a): 10 N·m (1.0 kg-m, 7.5 lb-ft)
(b): 23 N·m (2.3 kg-m, 17.0 lb-ft)

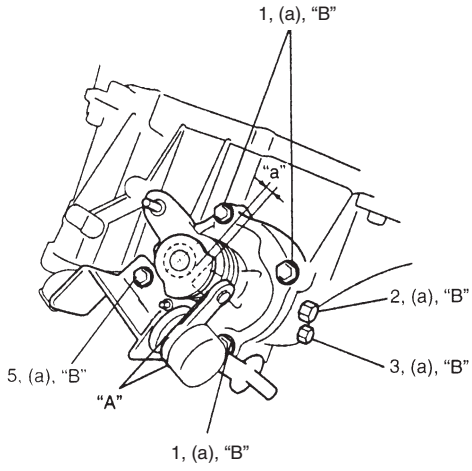

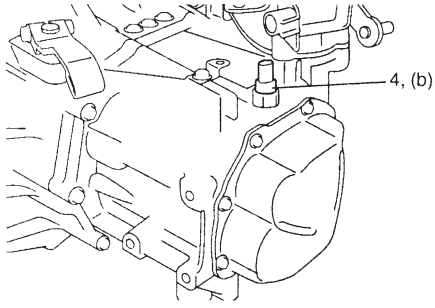

GEAR SHIFT AND SELECT SHAFT ASSEMBLY

1) Clean mating surface of guide case.
2) Apply grease to select lever shaft bush and select lever washer, and install gear shift and select shaft assembly with new gasket into transmission.

   "A": Grease A, 99000-25010

3) Apply sealant to gear shift guide case No. 2 bolt (5). Tighten gear shift guide case No. 1 bolts (1) and No. 2 bolt (5) to specified torque at the position that clearance "a" is within 1 – 1.5 mm (0.04 – 0.06 in.).

   Tightening Torque
   (a): 23 N·m (2.3 kg-m, 17.0 lb-ft)

4) Install washer and gear shift interlock bolt (2) applied with sealant and them tighten it to specified torque.

   "B": Sealant, Bond No.1215, 99000-31110

   Tightening Torque
   (a): 23 N·m (2.3 kg-m, 17.0 lb-ft)

5) Install washer and 5th to reverse interlock guide bolt (3) applied with sealant and then tighten it to specified torque.

   "B": Sealant, Bond No. 1215, 99000-31110

   Tightening Torque
   (a): 23 N·m (2.3 kg-m, 17.0 lb-ft)

6) Tighten back up light switch (4) to specified torque.

   Tightening Torque
   (b): 19 N·m (1.9 kg-m, 14.0 lb-ft)

7) Check input shaft for rotation in each gear position.
8) Also confirm function of back up light switch in reverse position by using ohmmeter.

REQUIRED SERVICE MATERIALS

MATERIALS	RECOMMENDED SUZUKI PRODUCTS	USE
Lithium grease	SUZUKI SUPER GREASE A (99000-25010)	● Oil seal lips
Sealant	SUZUKI BOND NO.1215 (99000-31110)	● Oil drain plug and filler/level plug ● Gear shift shaft bolt ● Mating surface of transmission case ● Mating surface of side cover ● Gear shift interlock bolt ● 5th to reverse interlock guide bolt
Thread lock cement	THREAD LOCK 1322 (99000-32110)	● Reverse gear shift lever bolts ● Oil gutter bolt ● Left case plate screws ● Shift fork plug ● Reverse shaft bolt

SPECIAL TOOLS

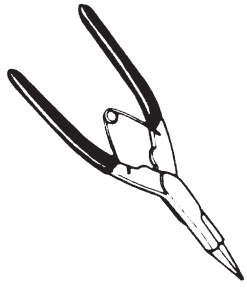 09900-06107 Snap ring pliers (Opening type)	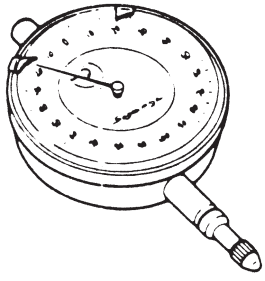 09900-20606 Dial gauge	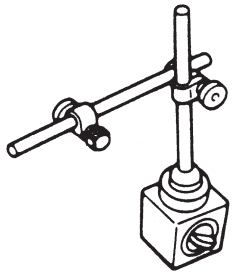 09900-20701 Magnetic stand	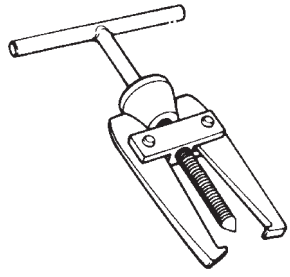 09913-60910 Bearing puller
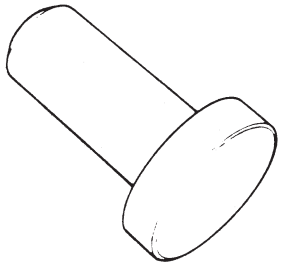 09913-75510 Bearing installer	 09913-80112 Bearing installer	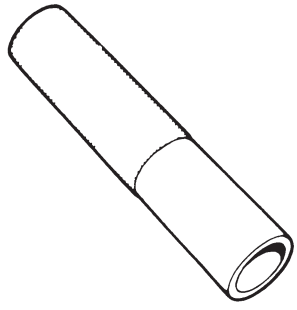 09913-84510 Bearing installer	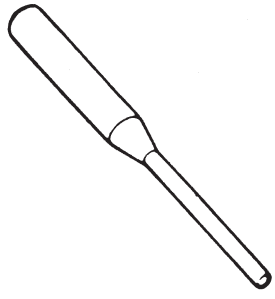 09922-85811 Spring pin remover 4.5 mm

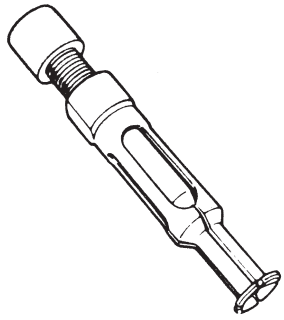 09923-74510 Bearing remover	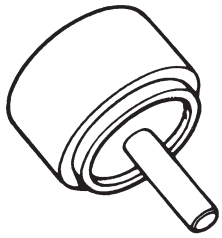 09923-78210 Bearing installer	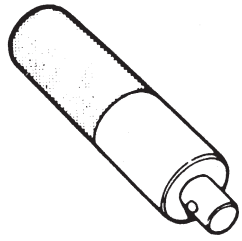 09924-74510 Installer attachment	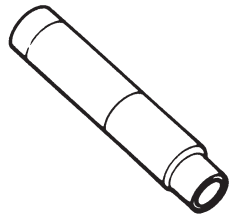 09925-18010 Bearing installer
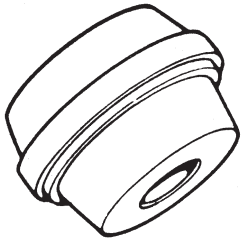 09925-68210 Bearing outer race installer	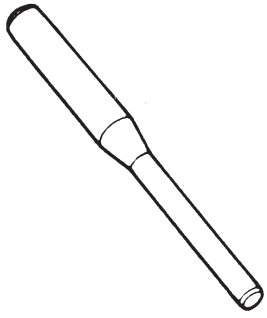 09925-78210 Spring pin remover 6 mm	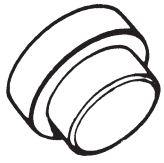 09925-88210 Bearing puller attachment	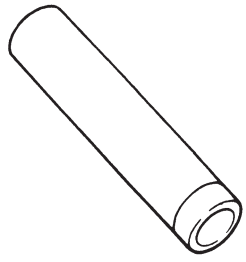 09925-98221 Bearing installer
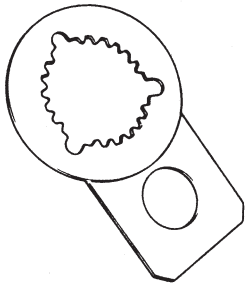 09927-76010 Gear holder	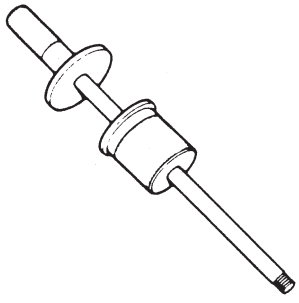 09930-30102 Sliding shaft	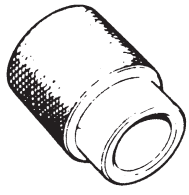 09940-53111 Bearing installer	 09940-54910 Sensor rotor installer
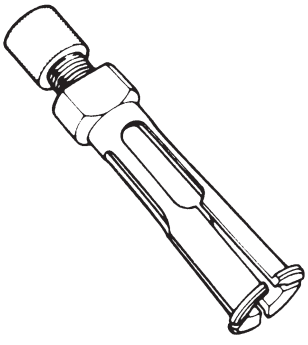 09941-64511 Bearing remover	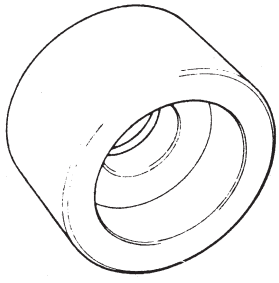 09951-16060 Bush remover	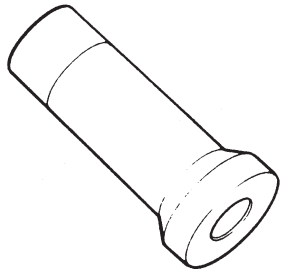 09951-76010 Bearing installer	

SECTION 7B

AUTOMATIC TRANSMISSION (4 A/T)

WARNING:
For vehicles equipped with Supplemental Restraint (Air Bag) System:

- **Service on and around the air bag system components or wiring must be performed only by an authorized SUZUKI dealer. Refer to "Air Bag System Components and Wiring Location View" under "General Description" in air bag system section in order to confirm whether you are performing service on or near the air bag system components or wiring. Please observe all WARNINGS and "Service Precautions" under "On-Vehicle Service" in air bag system section before performing service on or around the air bag system components or wiring. Failure to follow WARNINGS could result in unintentional activation of the system or could render the system inoperative. Either of these two conditions may result in severe injury.**
- **Technical service work must be started at least 90 seconds after the ignition switch is turned to the "LOCK" position and the negative cable is disconnected from the battery. Otherwise, the system may be activated by reserve energy in the Sensing and Diagnostic Module (SDM).**

CONTENTS

GENERAL DESCRIPTION

This automatic transmission is a full automatic type with 3-speed plus overdrive (O/D).
The torque converter is a 3-element, 1-step and 2-phase type equipped with lock-up mechanism. The gear shift device consists of 2 sets of planetary gear units, 3 sets of disc type clutches, 3 sets of disc type brakes and one-way clutch. The gear shift is done by selecting one of 6 positions (“P”, “R”, “N”, “D”, “2” and “L”) by means of the select lever installed on the floor. On the shift knob, there is an overdrive (O/D) cut switch which allows shift-up to the overdrive mode and shift-down from the overdrive mode.

NOTE:
Oil pump and differential gear are not shown in this figure.

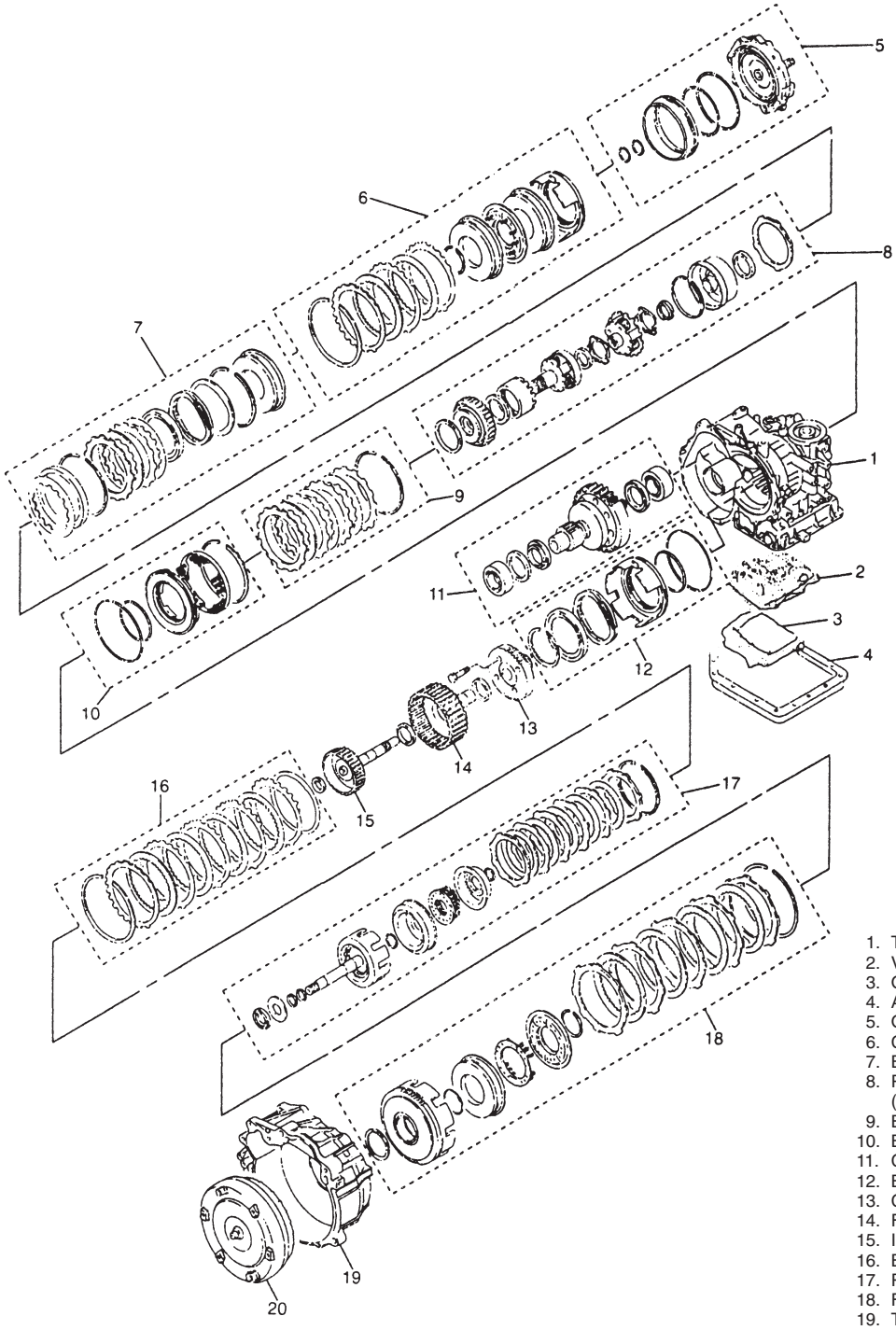

1. Transmission case
2. Valve body ass’y
3. Oil strainer
4. A/T oil pan
5. O/D brake and rear cover ass’y
6. C0 (direct clutch) clutch
7. B0 (O/D brake) brake ass’y
8. Planetary gear ass’y (including one-way clutch)
9. B1 brake ass’y
10. B1 (1st & 2nd brake) piston ass’y
11. Counter driven gear ass’y
12. B2 (reverse brake) piston ass’y
13. Counter drive gear
14. Follow shaft
15. Intermediate shaft
16. B2 brake ass’y
17. Rear clutch ass’y
18. Front clutch ass’y
19. Transmission housing
20. Torque converter

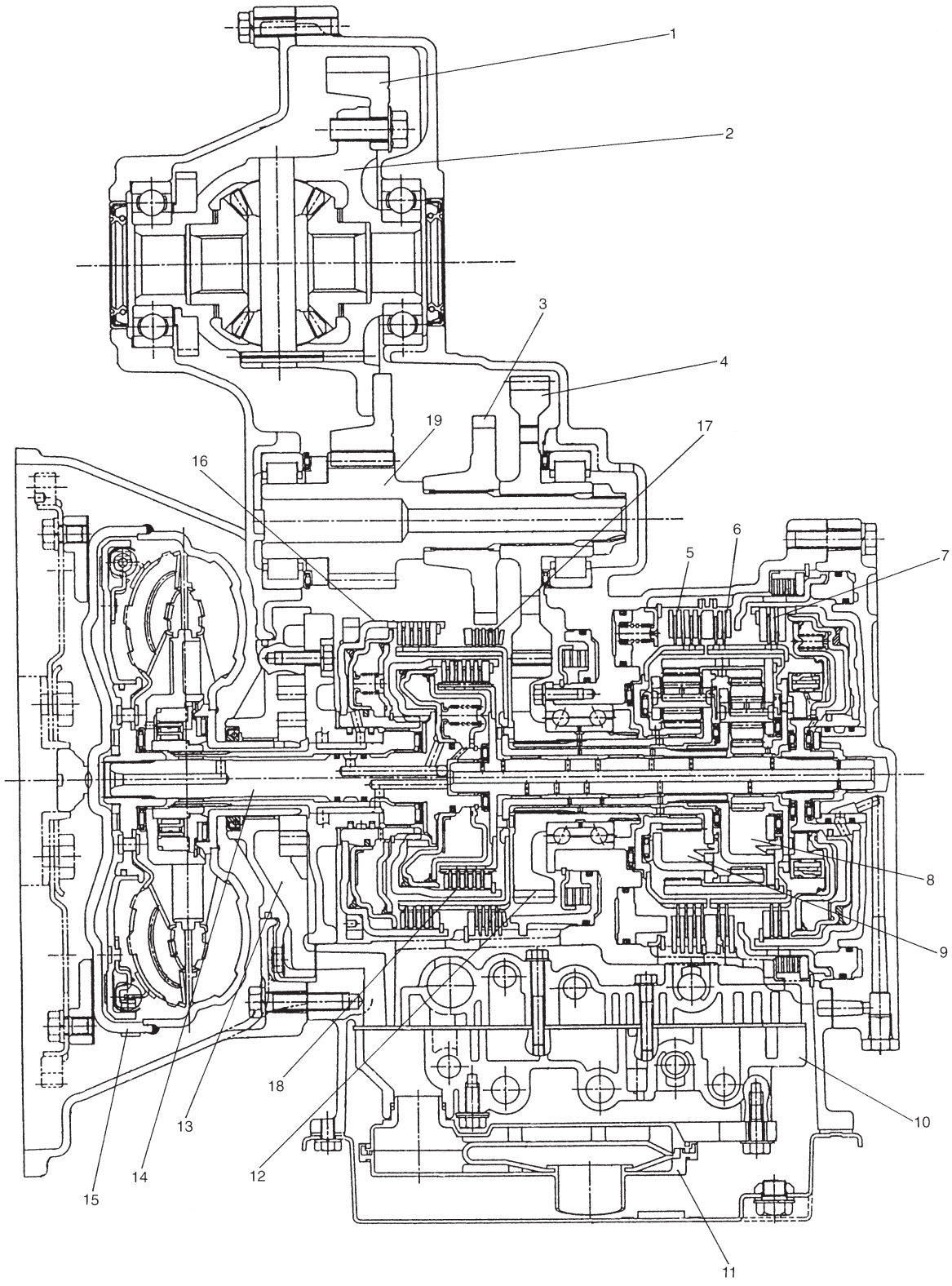

1. Final gear
2. Differential gear ass'y
3. Parking gear
4. Counter driven gear
5. 1st and 2nd brake (B1)
6. Overdrive brake (B0)
7. Direct clutch (C0)
8. Rear planetary gear
9. Front planetary gear
10. Valve body ass'y
11. Oil strainer
12. Counter drive gear
13. Oil pump
14. Input shaft
15. Torque converter
16. Front clutch (C2)
17. Reverse brake (B2)
18. Rear clutch (C1)
19. Differential drive pinion shaft

Item			Specifications		
Torque converter	Type Stall torque ratio		3-element, 1-step, 2-phase type 1.75		
Oil pump	Type Drive system		Internal gear type oil pump Engine driven		
Gear change device	Type		Forward 4-step, reverse 1-step planetary gear type		
	Shift position		"P" range	Gear in neutral, output shaft fixed, engine start	
			"R" range	Reverse	
			"N" range	Gear in neutral, engine start	
			"D" range (O/D ON)	Forward 1st ↔ 2nd ↔ 3rd ↔ 4th (O/D) automatic gear change	
			"D" range (O/D OFF)	Forward 1st ↔ 2nd ↔ 3rd ← 4th automatic gear change	
			"2" range	Forward 1st ↔ 2nd ← 3rd automatic gear change	
			"L" range	Forward 1st ← 2nd reduction, and fixed at 1st gear	
	Gear ratio	1st	2.962	Number of teeth	Front sun gear : 34 Rear sun gear : 21 Front pinion gear : 16 Rear pinion gear : 19 Front internal gear : 66 Rear internal gear : 59
		2nd	1.515		
		3rd	1.000		
		4th (overdrive gear)	0.737		
		Reverse (reverse gear)	2.809		
	Control elements		Wet type multi-disc clutch . . . . . 3 sets One-way clutch . . . . . 1 set Wet type multi-disc brake . . . . . 3 sets		
	Final gear reduction ratio (Differential)		3.578		
Lubrication	Lubrication system		Force feed system by oil pump		
Cooling	Cooling system		Water-cooled		
Fluid used			Equivalent of DEXRON®-III		

FUNCTIONS

NOTE:

For operation of each part, refer to TABLE OF COMPONENT OPERATION.

PART NAME	FUNCTION
Rear clutch	Meshes input shaft and rear sun gear through one-way clutch.
Front clutch	Meshes input shaft and front internal gear and rear carrier.
Overdrive brake	Fixes rear sun gear.
1st & 2nd brake	Fixes front sun gear.
Reverse brake	Fixes front internal gear and rear carrier.
Direct clutch	Meshes input shaft and rear sun gear.

TABLE OF COMPONENT OPERATION

Selector position	Gear position \ Part	Rear clutch	Front clutch	Overdrive brake	1st & 2nd brake	Reverse brake	Direct clutch	One-way clutch
P		○	X	X	X	X	○	X
R		○	X	X	X	○	○	○
N		○	X	X	X	X	○	X
D	1st	○	X	X	○	X	X	○
	2nd	○	○	X	○	X	X	X
	3rd	○	○	X	X	X	○	X
	4th (O/D)	X	○	○	X	X	○	X
2	1st	○	X	X	○	X	○	X
	2nd	○	○	X	○	X	○	X
L	1st	○	X	X	○	X	○	○

○ : Operating X : Not operating

TABLE OF SHIFT SOLENOID VALVE OPERATION

Range & Gear	Shift Solenoid Valve				
	No.1	No.2	No.3	No.4	No.5
P , N	X	○	X	X	X
1st gear of O/D, D , 2	X	○	○	X	○
1st gear of L	X	○	○	X	X
2nd gear of O/D, D , 2 , L	X	X	○	X	○
3rd gear of O/D, D (2 , L)	X	X	X	X	X
4th gear of O/D	○	X	X	○	X
R	X	X	X	X	X

○ : Operating X : Not operating

ELECTRONIC SHIFT CONTROL SYSTEM

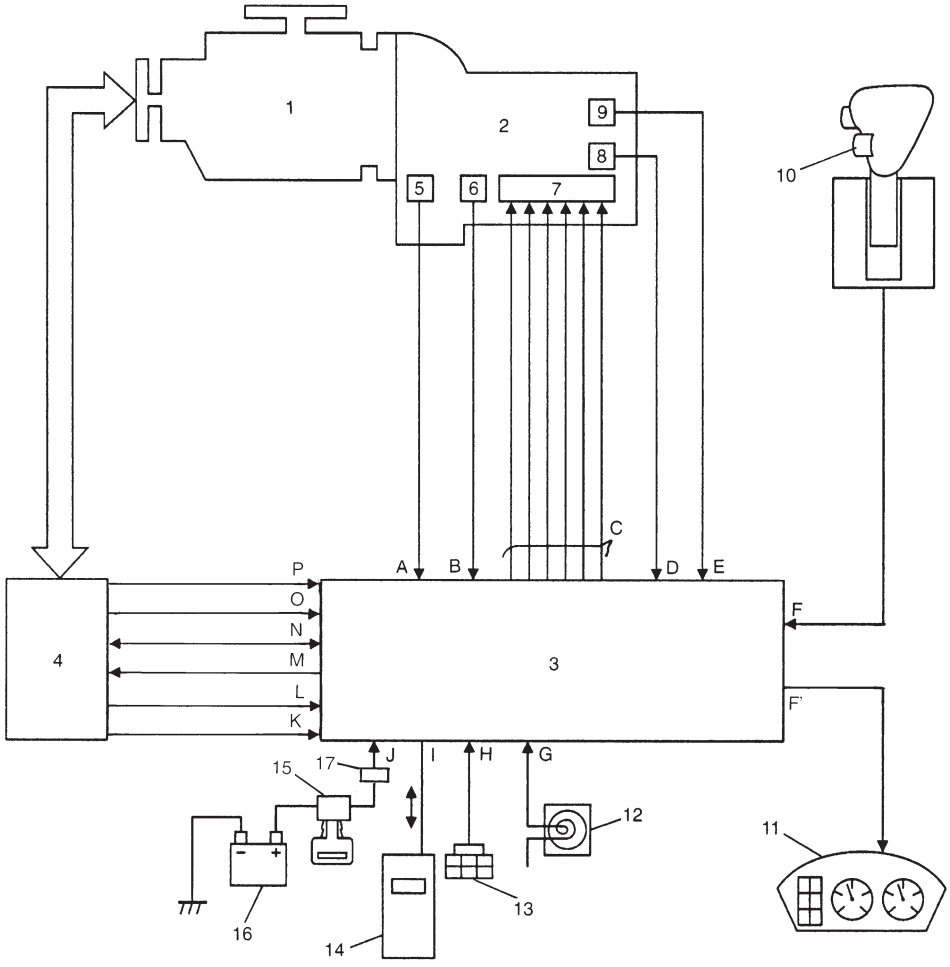

1. Engine
2. Transmission
3. TCM
4. ECM
5. Input revolution sensor
6. A/T fluid temperature sensor
7. Solenoid valves
   (Shift solenoid valve No.1 – No.5
   and Lock-up solenoid valve)
8. A/T vehicle speed sensor
9. Shift switch
10. O/D off switch
11. Combination meter
    (O/D off lamp)
12. Stop lamp
13. Monitor coupler
14. Suzuki scan tool
15. Ignition switch
16. Battery
17. A/T Relay

A. Input revolution signal
B. A/T fluid temp. signal
C. Shift/lock-up control signal
D. A/T VSS signal
E. Shift position signal
F. O/D off switch signal
F'. O/D off lamp signal
G. Brake switch signal
H. Diagnosis switch signal
I. Serial communication with
   Suzuki scan tool
J. Power supply
K. Throttle opening signal
L. Engine coolant temp. /MAP sensor signal
M. Idle up signal
N. A/T failure signal
O. Engine rev.
P. A/C signal.

TRANSMISSION CONTROL MODULE (TCM)

The TCM is an electronic circuit component that controls gear shift and idle-up according to the signal from each sensor. It is a microcomputer consisting of an IC, transistor, diode, etc. It is installed behind glove box.

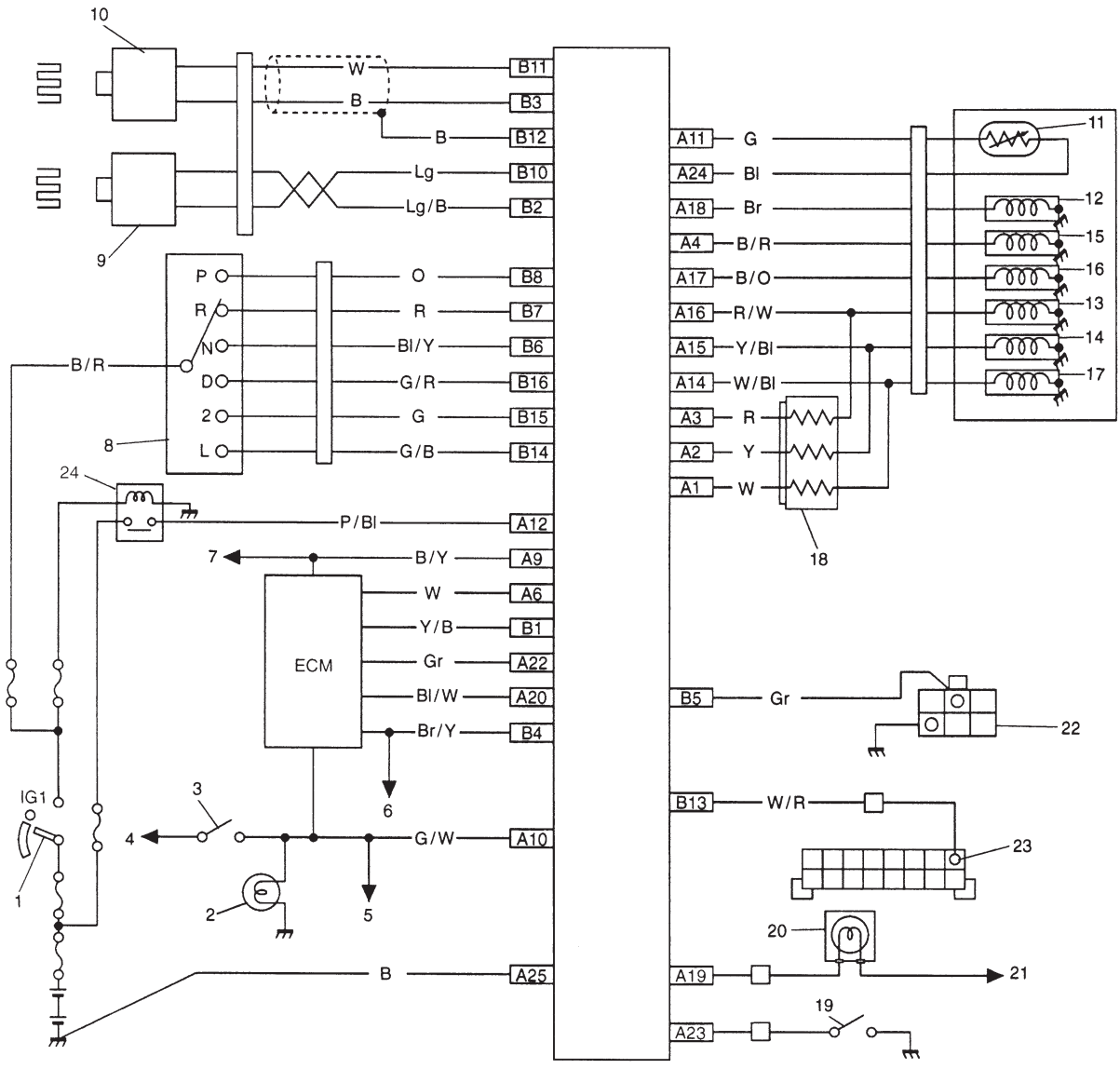

1. Ignition switch
2. Stop lamp
3. Stop lamp switch
4. To battery
5. To ABS control module (if equipped)
6. To speedometer, EPS controller (if equipped) and ABS control module (if equipped)
7. To A/C compressor
8. Shift switch
9. Input revolution sensor
10. A/T VSS
11. A/T fluid temperature sensor
12. Lock-up solenoid
13. Shift solenoid No.1
14. Shift solenoid No.2
15. Shift solenoid No.3
16. Shift solenoid No.4
17. Shift solenoid No.5
18. Dropping resister
19. O/D (Over Drive) off switch
20. "O/D OFF" lamp
21. To IG 1
22. Monitor coupler
23. Data link connector
24. A/T relay

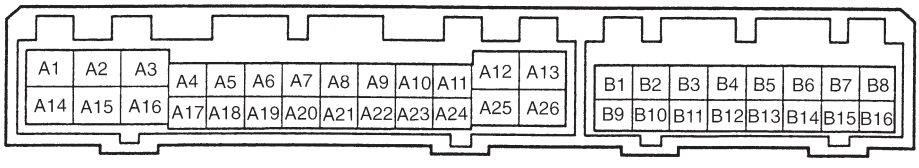

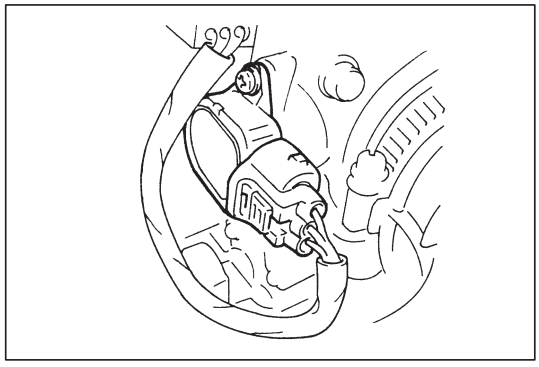

THROTTLE POSITION SENSOR

This sensor is installed to the throttle valve shaft. Throttle valve opening signal is transmitted from TP sensor to ECM as voltage signal. The signal is converted to duty signal in ECM and it is sent to TCM.

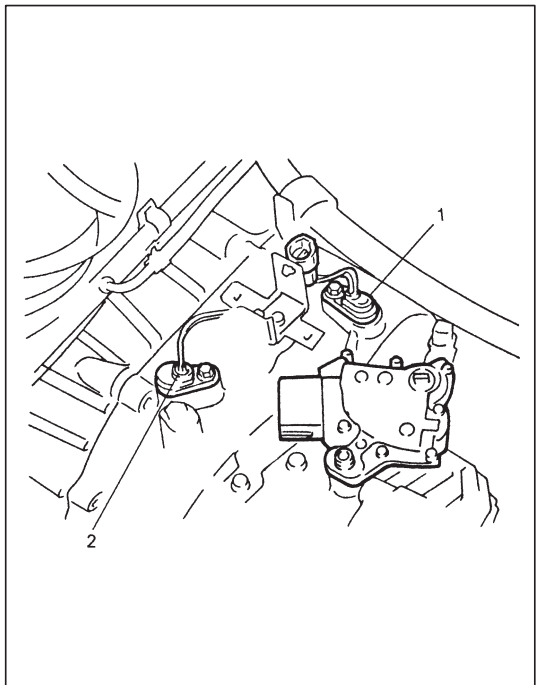

1. A/T VSS
2. Input revolution sensor

VEHICLE SPEED SENSOR

This sensor is a pulse generator type that detects revolution of the counter driven gear (vehicle speed) in the transmission case.
The pulse generator is a noncontact sensor consisting of a permanent magnet, coil and gears.
As the gear of the counter driven gear rotor turns, the magne-flux from the permanent magnet varies and a voltage of the frequency corresponding to the rotor revolution occurs in the coil. This voltage is inputted to the TCM where TCM judges the counter driven gear revolution or the vehicle speed.

INPUT REVOLUTION SENSOR

This sensor is a pulse generator type that detects revolution of torque converter's turbine shaft in the transmission case.
The principle of operation is the same as the vehicle speed sensor.

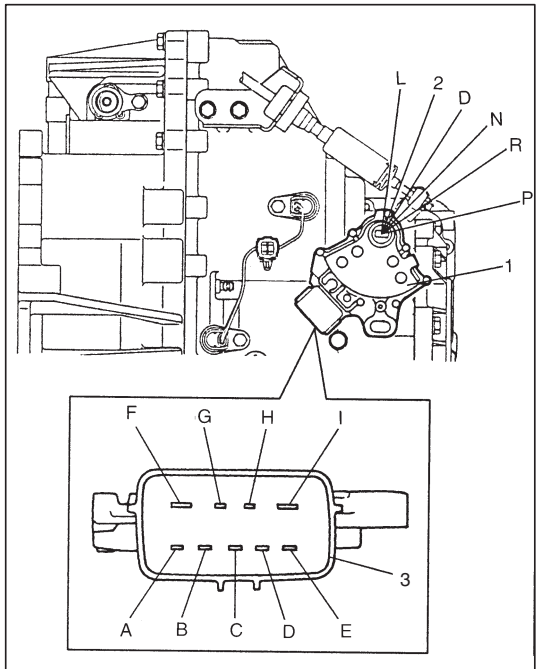

3. Shift switch coupler

SHIFT SWITCH

A shift switch (1) is provided so that the engine can be started only when the shift lever is in the "P" or "N" position.

Switch Position \ Terminal No	B	A	H	C	E	D	G	I	F
P	○						○	○	○
R		○					○		
N			○				○	○	○
D				○			○		
2					○		○		
L						○	○		

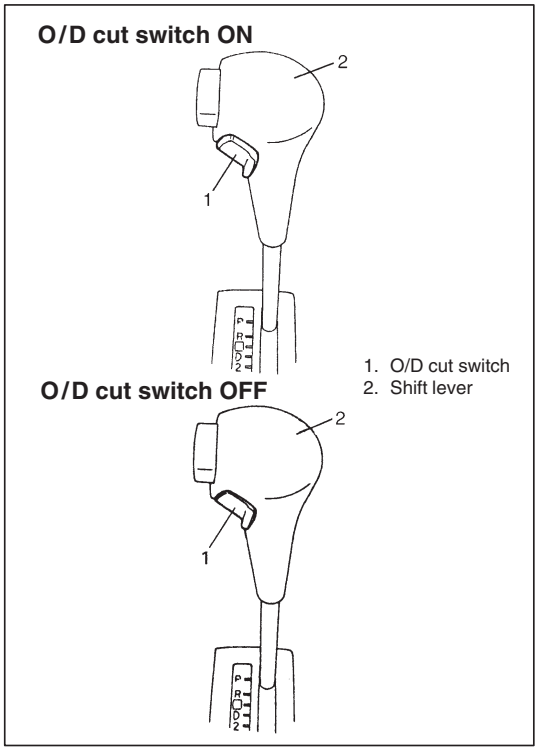

O/D CUT SWITCH

The gear shift up or shift down to and from the O/D gear can be selected with this switch.

O/D cut switch	O/D OFF indicator light
ON	ON
OFF	OFF

FAIL SAFE FUNCTION

This function is provided by the safe mechanism that assures safe driveability even when the solenoid valve, sensor or its circuit fails.

The table below shows the fail safe function for each fail condition of sensor, solenoid or its circuit.

AREA	Fail safe condition	Fail safe function
Throttle opening signal circuit	1. Circuit open/shorted 2. Abnormal signal 3. Abnormal ECM output	1. Choosing gear as throttle at "full closed". 2. Choosing gear as throttle at "full open". 3. Vehicle coasted down when brake is applied and engine rev. is less than 1,500 rpm.
Input rev. signal/ output rev. signal circuit faulty	No signal or abnormal signal inputted	● When vehicle running, the gear is fixed to the gear right before the trouble is occurred and O/D is cut. ● When vehicle running and in shift change, the gear is fixed to the gear which is going to be selected. Lock-up function is turned OFF. ● When trouble found vehicle at stop, the gear is selected as follows; P:P, R:R, N:N, D:3rd, 2:2nd, L:1st.
Shift switch and its circuit	1. No shift switch signal input 2. Two or more shift switch signals input	1. The gear is fixed to "R" range. 2. When trouble found vehicle at stop, if 2 or more signal inputted at the same time, the gear is selected as follows: P·R→R, R·N→R, N·D→D, D·2→D, 2·L→2 ● When vehicle running, the gear is fixed to the gear right before the trouble is occurred. ● When 3 or more signals inputted, the gear is fixed to "R" range.
A/T fluid temp. sensor	Low fluid temp. signal inputted for a long time	No lock-up.
Shift solenoid or its circuit	Abnormal voltage is detected.	A/T power relay is turned OFF and the gear is selected as follows: P:P, R:R, N:N, D/2/L:3rd
Lock-up solenoid or its circuit	Abnormal voltage is detected.	No lock-up.
Internal relay for solenoids	1. Relay shorted (Deposited) 2. Relay circuit open	1. The gear is selected as follows: P:P, R:R, N:N, D:3rd, 2:2nd, L:1st. 2. All operating signals for solenoids are cut.

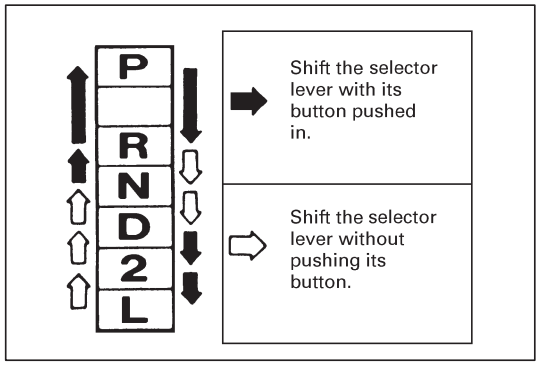

CHANGE MECHANISM

The same select pattern shift lever is used as the floor type and frequently used "N" and "D" ranges are made selectable freely.

AUTOMATIC GEAR SHIFT DIAGRAM

Automatic shift schedule as a result of shift control is shown below.

Unit: km/h

Shift / Throttle opening	1 → 2	2 → 3	3 → 4	4 → 3	3 → 2	2 → 1
Full throttle	44	93	—	123	78	34
Closed throttle	13	24	43	34	9	9

Gear Shift Diagram

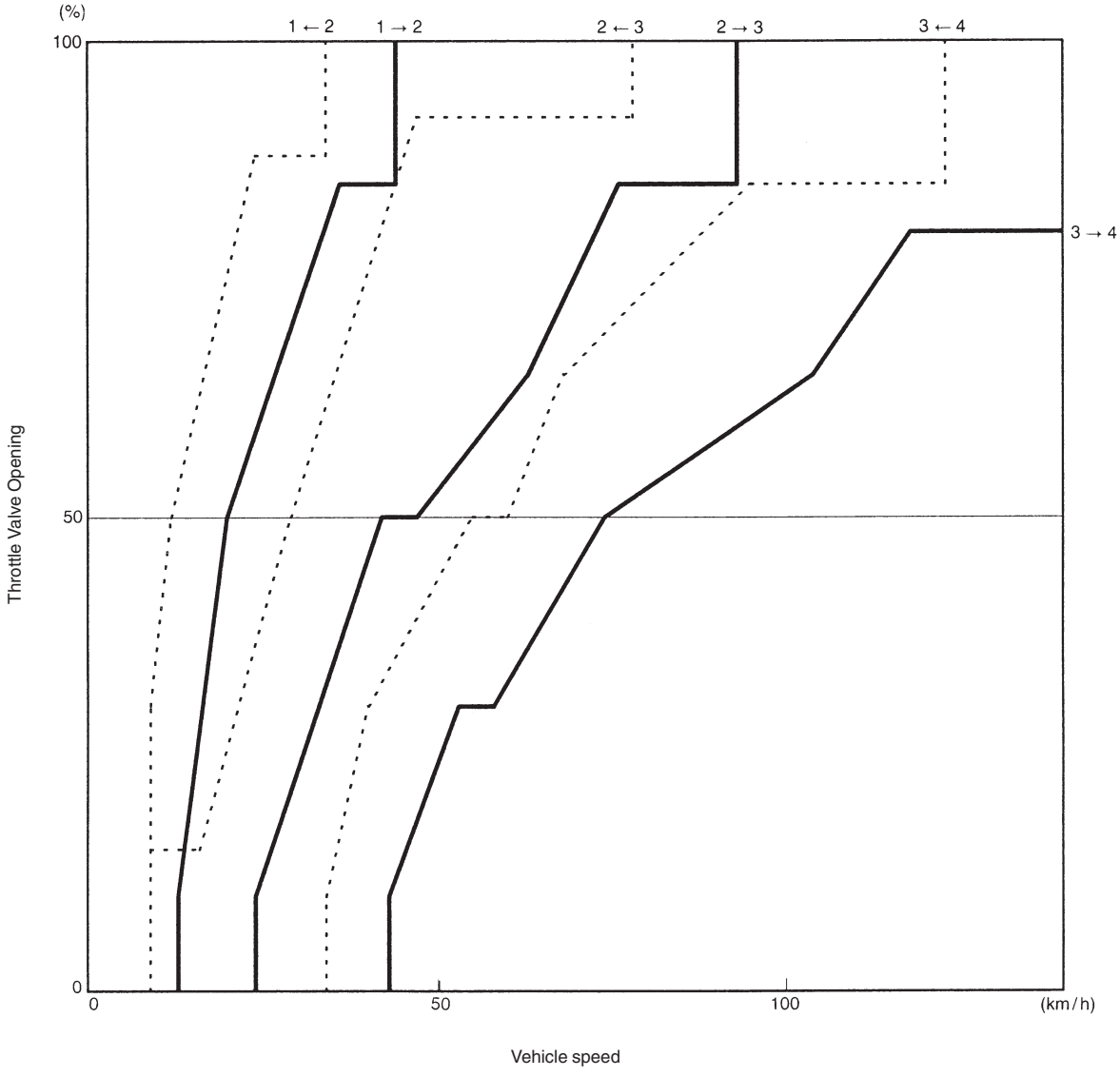

TCC Lock-up Diagram

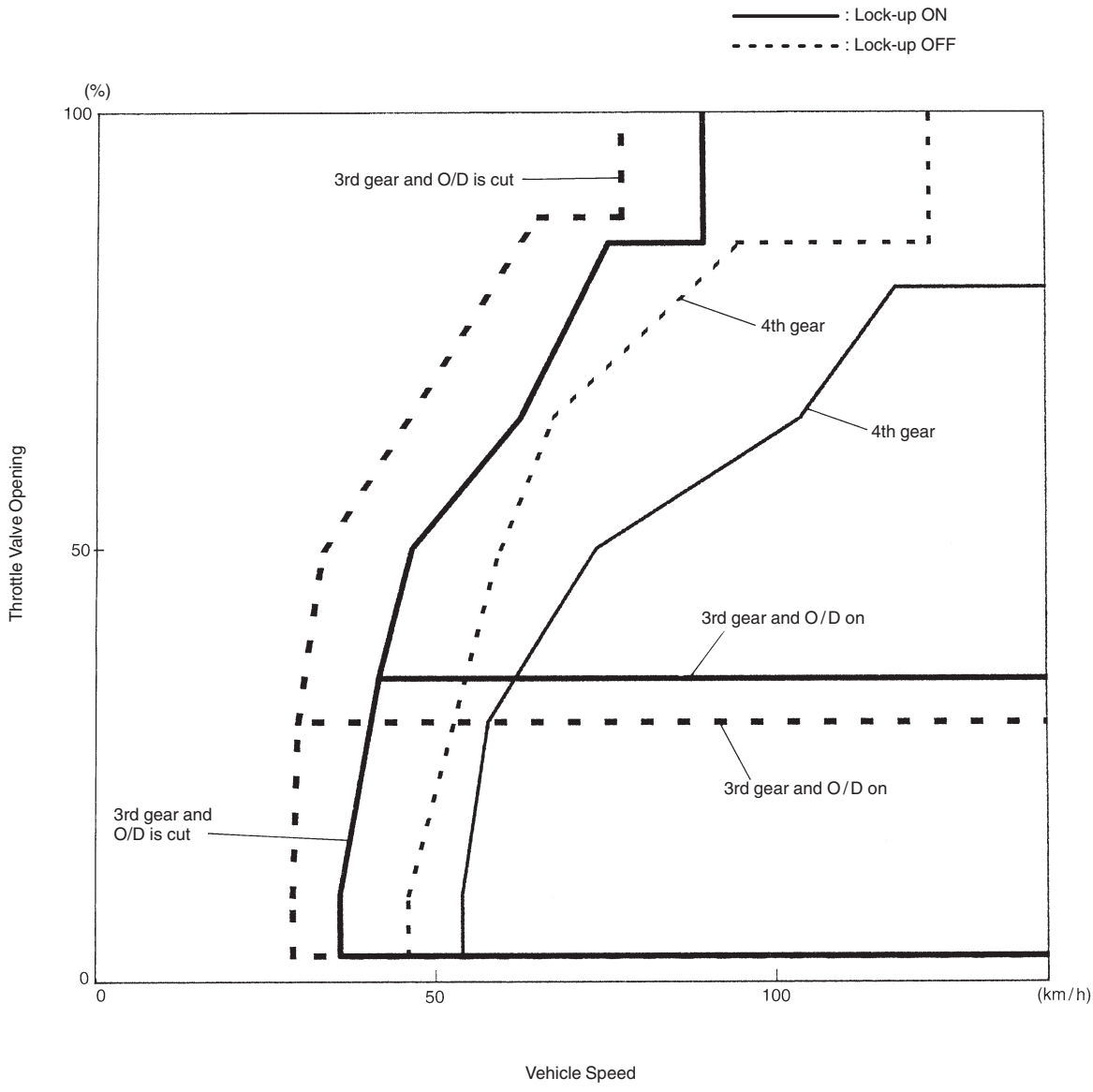

DIAGNOSIS

This vehicle is equipped with an electronic transmission control system, which controls the automatic shift up and shift down timing, etc. suitably to vehicle driving conditions.
When diagnosing a trouble in the transmission including this system, follow “AUTOMATIC TRANSMISSION DIAGNOSTIC FLOW TABLE” given below to obtain correct result smoothly.

AUTOMATIC TRANSMISSION DIAGNOSTIC FLOW CHART

NOTE:
For the details of each step, refer to the following pages.

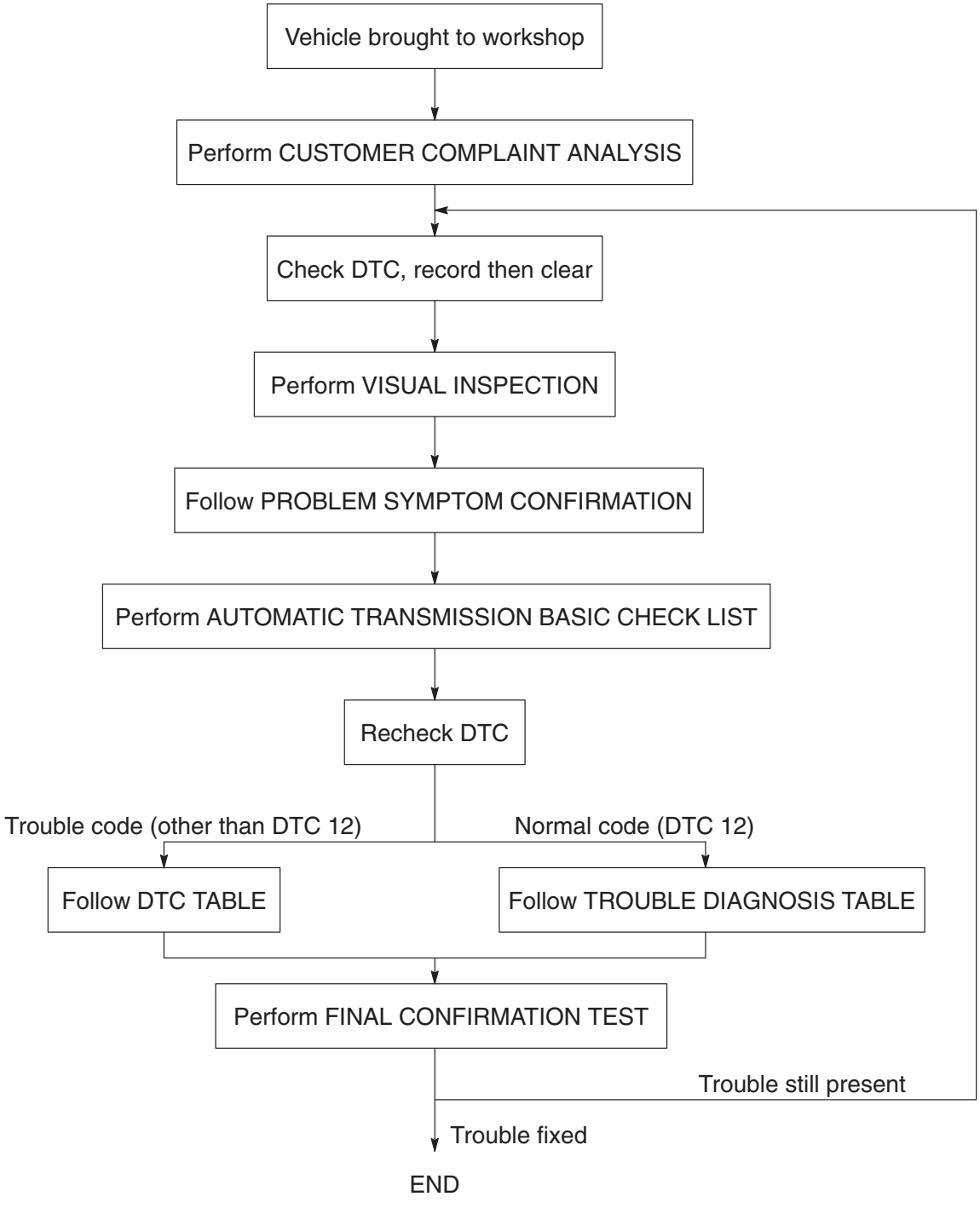

1. CUSTOMER COMPLAINT ANALYSIS

Record details of the problem (failure, complaint) and how it occurred as described by the customer. For this purpose, use of such a questionnaire form as shown below will facilitate collecting information to the point required for proper analysis and diagnosis.

CUSTOMER QUESTIONNAIRE (EXAMPLE)

User name:	Model:	VIN:	
Date of issue:	Date Reg.	Date of problem:	Mileage:
DESCRIPTION OF PROBLEM			
Engine does not start		Engine stops	
Vehicle does not move (forward, rearward)		Transmission does not shift (1st, 2nd, 3rd, 4th, Rev) gear	
No lock-up (Lock-up clutch operation)		Automatic shift does not occur	
Shift point too high or too low		Transmission slipping in (1st, 2nd, 3rd, 4th, Rev) gear	
Excessive gear change shock		Other	
VEHICLE/ENVIRONMENTAL CONDITION WHEN PROBLEM OCCURS			
Environmental Condition			
Weather	fair/cloudy/rain/snow/not related/other( )		
Temperature	hot/warm/cool/cold/( ) °C/not related		
Frequency	always/sometimes (times/ day, month)/only once		
Road	urban/suburb/highway/mountainous (uphill/downhill)/tarmacadam/gravel/other( )		
Vehicle Condition			
Transmission range	(P, R, N, D, 2, L) range/(→) range		
Transmission temp.	cold/warming up phase/warmed up		
Vehicle	at stop/during driving (constant speed/accelerating/decelerating/right hand corner/left hand corner)/other ( )/speed (km/h)		
Engine	Speed (r/min)/throttle opening (idle/about %/full)		
Brake	Apply/Not apply		
“O/D OFF” switch	ON/OFF		
MALFUNCTION INDICATOR LAMP (“O/D OFF” LIGHT) FUNCTION			
always ON/sometimes ON/not on			
Diagnostic trouble code indicated/not indicated			
Diagnostic trouble code recorded			

NOTE:
The above form is a standard sample. It should be modified according to conditions characteristic of each market.

2. DIAGNOSTIC TROUBLE CODE (DTC) CHECK, RECORD AND CLEAR

To check DTC, refer to Diagnostic Trouble Code(s) Check in this section. When a DTC is indicated by this lamp, it means existence of a malfunction in the system represented by that code but whether it still exists (current) or it occurred in the past and has gone (history) is unknown. To know it, clear this DTC once (Refer to DIAGNOSTIC TROUBLE CODE CLEARANCE in this section.), perform TEST DRIVE and/or PROBLEM SYMPTOM CONFIRMATION in this section and then check DTC again as described in DIAGNOSTIC TROUBLE CODE CHECK. Attempt to diagnose the trouble based on the DTC recorded in this step or failure to clear the DTC in this step may mislead the diagnosis or make diagnosing difficult. Even after checking the DTC with the SUZUKI scan tool, diagnosis should be performed according to this flow chart to check TCM for proper self-diagnosis function.

3. VISUAL INSPECTION

As a preliminary step, perform visual check of the following items that support proper function of the automatic transmission.

INSPECTION ITEM	REFERRING SECTION
● Engine oil ----- level, leakage	Section 0B
● Engine coolant ----- level, leakage	Section 0B
● A/T fluid ----- level, leakage, color	Section 0B
● Battery ----- fluid level, corrosion of terminal	
● A/T fluid hoses ----- disconnection, looseness, deterioration	
● Connectors of electric wire harness ----- disconnection, friction	Section 8
● Fuses ----- burning	Section 8
● Parts ----- installation, bolt ----- looseness	
● Parts ----- deformation	
● Other parts that can be checked visually	
Also add following items at engine start.	
● Indicator, warning lights in combination meter ----- ON (indicating abnormality in system) or OFF	Section 8C
● Other parts that can be checked visually	

4. PROBLEM SYMPTOM CONFIRMATION

Check if what the customer claimed in CUSTOMER COMPLAINT ANALYSIS is actually found in the vehicle and if that symptom is found, whether it is identified as a failure. (This step should be shared with the customer if possible.)

When the symptom is not actually found, possibility is:

- The symptom occurs under certain conditions.
  ----- Retry with the vehicle under different conditions.
- The trouble occurred only temporarily and normal operation has been restored.
  ----- Perform DIAGNOSTIC TROUBLE CODE CHECK and if the diagnostic trouble code is indicated, inspect according to the flow table for that DTC.

5. AUTOMATIC TRANSMISSION BASIC CHECK

Perform basic automatic transmission check according to the list below first.

AUTOMATIC TRANSMISSION BASIC CHECK LIST

1. Power Supply Voltage Check
   Check that the battery voltage is within 10 – 14 V at engine stop.
2. A/T Fluid Check
   Check A/T fluid level and quality.
3. STALL TEST
   Perform STALL TEST. Refer to STALL TEST in this section for details.
4. LINE PRESSURE TEST
   Perform LINE PRESSURE TEST. Refer to LINE PRESSURE TEST in this section.
5. ROAD TEST
   Perform ROAD TEST to understand correctly the trouble area.
6. Electrical Harness and Coupler Check
   Check the connection of the harness coupler. Check for the loose connection of the harness, loose connection of the terminals.

5-1. DIAGNOSTIC TROUBLE CODE CHECK

Check diagnostic trouble code, referring diagnostic trouble code(s) check in this section.

5-2. DIAGNOSTIC TROUBLE CODE FLOW CHART

Based on the DTC indicated in DIAGNOSTIC TROUBLE CODE CHECK, locate the cause of the trouble, namely in a sensor, switch, wire harness, connector, actuator, TCM or other part and repair or replace faulty parts.

6. FINAL CONFIRMATION TEST

Confirm that the problem symptom has gone and the automatic transmission is free from any abnormal conditions. If what has been repaired is related to the malfunction DTC, clear the DTC once and perform test driving and confirm that a normal code is indicated.

TROUBLE DIAGNOSIS TABLE

NOTE:
For the inspection of throttle position sensor, refer to TP SENSOR in Section 6E of Service Manual mentioned in the FOREWORD of this manual.

TABLE 1 (ELECTRICAL)

Condition		Possible Cause	Correction
No up-shift	**1st → 2nd** **2nd → 3rd**	● A/T VSS or its circuit faulty ● Shift solenoid No.2 (1st → 2nd), No.3 (2nd → 3rd) , No.5 (2nd → 3rd) and/or its circuit faulty ● Throttle position sensor or its circuit faulty ● TCM faulty	Inspect A/T VSS. Repair or replace. Inspect TP sensor. Replace TCM.
	3rd → 4th	● A/T VSS or its circuit faulty ● Shift solenoid No.1, No.4 or its circuit faulty ● O/D CUT switch circuit faulty ● Throttle position sensor or its circuit faulty ● TCM faulty	Inspect A/T VSS. Repair or replace. Refer to “O/D CUT SWITCH” in this section and/or inspect its circuit. Inspect TP sensor. Replace TCM.
No down-shift	**4th → 3rd** **3rd → 2nd** **2nd → 1st**	● Shift solenoid No.1 (4th → 3rd), No.2 (2nd → 1st), No.3 (3rd → 2nd), No.4 (4th → 3rd), No.5 (3rd → 2nd) or its circuit faulty ● Throttle position sensor or its circuit faulty ● TCM faulty	Repair or replace. Inspect TP sensor. Replace TCM.
Shift point too high or too low		● Throttle position sensor, A/T VSS or its circuit faulty	Inspect TP sensor and/or A/T VSS.
Vehicle does not move		● Shift solenoid No.1, No.2, No.3 or its circuit faulty	Repair or replace.
Excessive slip		● Shift solenoid No.1 to No.5 or its circuit faulty	Repair or replace.
Excessive shock at N → D or N → R		● Shift solenoid No.2, No.3, No. 5 or its circuit faulty ● ISC circuit	Repair or replace. Inspect ISC circuit.
No lock-up or No lock-up OFF		● Lock-up solenoid valve or its circuit faulty ● Throttle position sensor or its circuit faulty ● Input rev. sensor and/or AT VSS or its circuit faulty. ● Abnormal engine rev. signal or its circuit. ● ECM faulty	Repair or replace. Refer to throttle position sensor in Section 6E. Refer to ECT sensor in Section 6E. Repair or replace. Inspect ECM.

TABLE 2 (MECHANICAL)

Condition		Possible Cause	Correction
Vehicle does not move at any range		● Manual valve faulty ● Primary regulator valve faulty	Clean or replace. Clean or replace.
No gear change	**1st ⇆ 2nd**	● Shift solenoid No.2 and/or No.5 stuck	Clean or replace.
	2nd ⇆ 3rd	● Shift solenoid No.1, No.3 and/or fail valve No.1 stuck	Clean or replace.
	3rd ⇆ 4th	● Shift solenoid No.1, No.4 and/or fail valve No.2 stuck	Clean or replace.
Harsh engagement	**P, N → R**	● Front clutch accumulator faulty	Clean or replace.
	N → D	● 1st & 2nd brake accumulator faulty	Clean or replace.
	1st → 2nd at D range or 2 range	● Front clutch accumulator faulty ● Shift solenoid No.2	Clean or replace.
	2nd → 3rd at D range	● Direct clutch accumulator faulty ● Shift solenoid No.5	Clean or replace.
	3rd → 4th at D range	● Overdrive brake accumulator faulty ● Shift solenoid No.4	Clean or replace.
	All gear change	● Primary regulator valve faulty	Clean or replace.
Excessive slip (low line pressure)		● Primary regulator valve faulty	Clean or replace.
Vehicle does not move at	**1st, 2nd, 3rd and reverse gear**	● Rear clutch faulty	Repair or replace.
	Reverse gear	● Reverse brake faulty	Repair or replace.
	2nd, 3rd and 4th gear	● Front clutch faulty	Repair or replace.
	3rd and 4th gear	● Direct clutch faulty	Repair or replace.
	1st and 2nd gear	● 1st & 2nd brake faulty	Repair or replace.
	4th gear	● Overdrive brake faulty	Repair or replace.
	Any forward and reverse gear	● Parking lock pawl faulty	Repair or replace.
Shock or engine stalls when starting off and stopping		● Lock-up clutch faulty ● Lock-up solenoid faulty ● Lock-up control valve faulty ● Lock-up signal valve faulty	Inspect and replace as necessary. Clean or replace. Clean or replace. Clean or replace.
No up-shift	**1st → 2nd**	● Front clutch faulty	Repair or replace.
	2nd → 3rd	● Direct clutch faulty	Repair or replace.
	3rd → 4th	● Overdrive brake faulty	Repair or replace.
No engine braking	**2nd or 3rd gear**	● Front, rear or direct clutch or 1st & 2nd brake faulty	Repair or replace.
	L range 1st gear	● Direct clutch or 1st & 2nd brake faulty	Repair or replace.
No lock-up		● Torque converter clutch faulty ● Lock-up control valve faulty ● Lock-up solenoid faulty ● Secondary regulator valve faulty ● Signal valve faulty	Inspect and replace as necessary. Clean or replace. Clean or replace. Clean or replace. Clean or replace.

STALL TEST

This test is to check overall performance of automatic transmission and engine by measuring stall speed at “D” and “R” ranges. Be sure to perform this test only when transmission fluid is at normal operating temperature and its level is between FULL and LOW marks.

CAUTION:
- **Do not run engine at stall more than 5 seconds continuously, for fluid temperature may rise excessively high.**
- **After performing stall test, be sure to leave engine running at idle for longer than 30 seconds before another stall test.**

1) Apply parking brake and block wheels.
2) Install tachometer.
3) Start engine with select lever shifted to “P”.
4) Depress brake pedal fully.
5) Shift select lever to “D” and depress accelerator pedal fully while watching tachometer. Read engine rpm quickly when it has become constant (stall speed).
6) Release accelerator pedal immediately after stall speed is checked.
7) In the same way, check stall speed in “R” range.
8) Stall speed should be within following specification.

   Stall speed: 2,700 – 3,100 r/min

Test result	Possible cause
Lower than standard level	● Lack of engine output ● Defective torque converter
Higher than standard level in “D” range	● Low line pressure ● Malfunctioning 1st & 2nd brake ● Malfunctioning rear clutch ● Malfunctioning stator one-way clutch
Higher than standard level in “R” range	● Low line pressure ● Malfunctioning rear clutch ● Malfunctioning reverse brake ● Malfunctioning stator one-way clutch ● Malfunctioning direct clutch

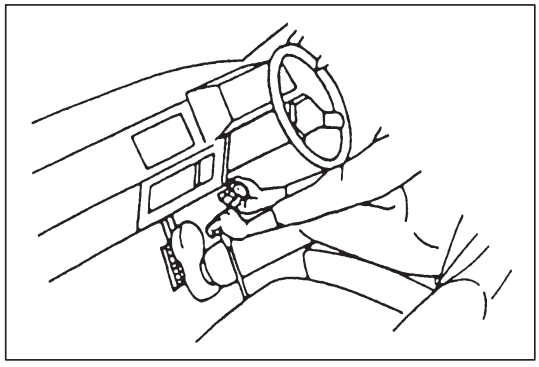

TIME LAG TEST

This test is to check conditions of clutch, reverse brake and fluid pressure. “Time lag” means time elapsed since select lever is shifted with engine idling till shock is felt.

1) With chocks placed in front and behind front and rear wheels respectively, depress brake pedal.
2) Start engine.
3) With stop watch ready, shift select lever from “N” to “D” range and measure time from that moment till shock is felt.

4) Similarly measure time lag by shifting select lever from “N” to “R” range.

Specification for time lag	“N”→“D”	Less than 1.0 sec.
	“N”→“R”	Less than 1.2 sec.

NOTE:
- **Make sure that selector cable is propery adjusted.**
- **When repeating this test, be sure to wait at least minute after select lever is shifted back to “N” range.**
- **Engine should be warmed up fully for this test.**

Test result	Possible cause
When “N”→“D” time lag exceeds specification.	● Low line pressure ● Worn rear clutch ● Worn 1st & 2nd brake
When “N”→“R” time lag exceeds specification.	● Low line pressure ● Worn rear clutch ● Worn direct clutch ● Worn reverse brake

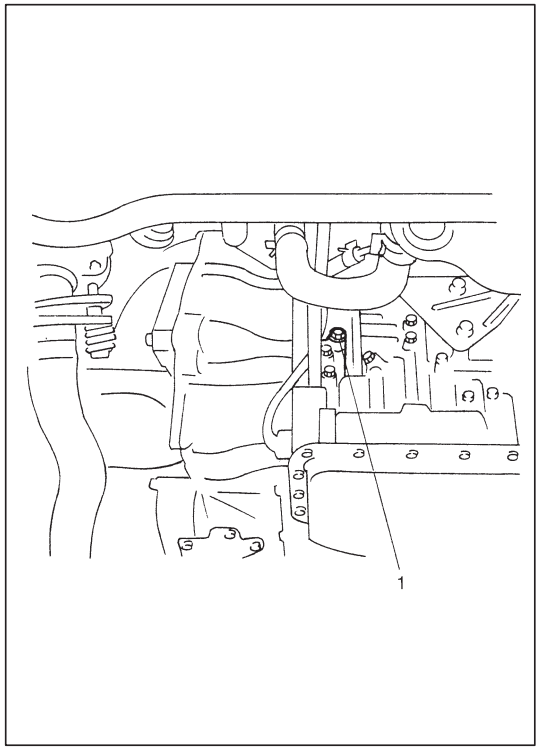

LINE PRESSURE TEST

Purpose of this test is to check operating conditions of each part by measuring fluid pressure in fluid pressure line.
Line pressure test requires following conditions.

- Automatic fluid is at normal operating temperature (70 – 80°C/158 – 176°F).
- Fluid is filled to proper level (between FULL and LOW on dipstick).

1) Apply parking brake securely and place chocks against wheels.
2) Remove fluid pressure check hole plug bolt (1).
3) Attach oil pressure gauge to fluid pressure check hole in transmission case.

Special Tool
(A) : 09925-37810

CAUTION:
After attaching oil pressure gauge, check that no fluid leakage exists.

4) Depress foot brake fully, run engine at idle and stall then check fluid pressure in “D” or “R” range.

CAUTION:
Do not continue running engine at stall speed longer than 5 seconds.

Engine running mode	Line pressure	
	“D” range	“R” range
At idle speed	7.6 – 9.2 kg/cm^2 108.1 – 130.8 psi	14.1 – 17.3 kg/cm^2 200.6 – 246.0 psi
At stall speed	7.9 – 9.5 kg/cm^2 112.4 – 135.0 psi	14.4 – 17.6 kg/cm^2 204.8 – 250.2 psi

Test result	Possible cause
Line pressure higher than standard level in each range	● Malfunctioning regulator valve
Line pressure lower than standard level in each range	● Malfunctioning regulator valve ● Defective oil pump
Line pressure lower than standard level only in “D” range	● Fluid leakage from “D” range pressure circuit ● Fluid leakage from 1st & 2nd brake ● Fluid leakage from rear clutch
Line pressure lower than standard level only in “R” range	● Fluid leakage from “R” range pressure circuit ● Fluid leakage from rear clutch ● Fluid leakage from direct clutch ● Fluid leakage from reverse brake

ENGINE BRAKE TEST

WARNING:
Before test, make sure that there is no vehicle behind so as to prevent rear-end collision.

1) While driving vehicle in 3rd gear of “D” range, shift select lever down to “2” range and check if engine brake operates.
2) In the same way as in Step 1), check engine brake for operation when select lever is shifted down to “L” range.
3) Engine brake should operate in above test.

Test result	Possible cause
Fails to operate when shifted down to “2” range	● Defective shift switch ● 1st & 2nd brake defective ● Direct clutch defective
Fails to operate when shifted down to “L” range	

“P” RANGE TEST

1) Stop vehicle on a slope, shift select lever to “P” range and at the same time apply parking brake.
2) After stopping engine, depress brake pedal and release parking brake.
3) Then, release brake pedal gradually and check that vehicle remains stationary.
4) Depress brake pedal and shift select lever to “N” range.
5) Then, release brake pedal gradually and check that vehicle moves.

WARNING:
Before test, check to make sure no one is around vehicle or down on a slope and keep watchful for safety during test.

Test result	Possible cause
Vehicle moves at “P” range or remains stationary at “N” range	Defective parking lock pawl or spring

ELECTRONIC CONTROL SYSTEM DIAGNOSIS

TCM has on-board diagnostic system (a system self-diagnosis function).
Investigate where the trouble is by referring to “DIAGNOSTIC FLOW TABLE” and “DIAGNOSTIC TROUBLE CODE TABLE” on later pages.

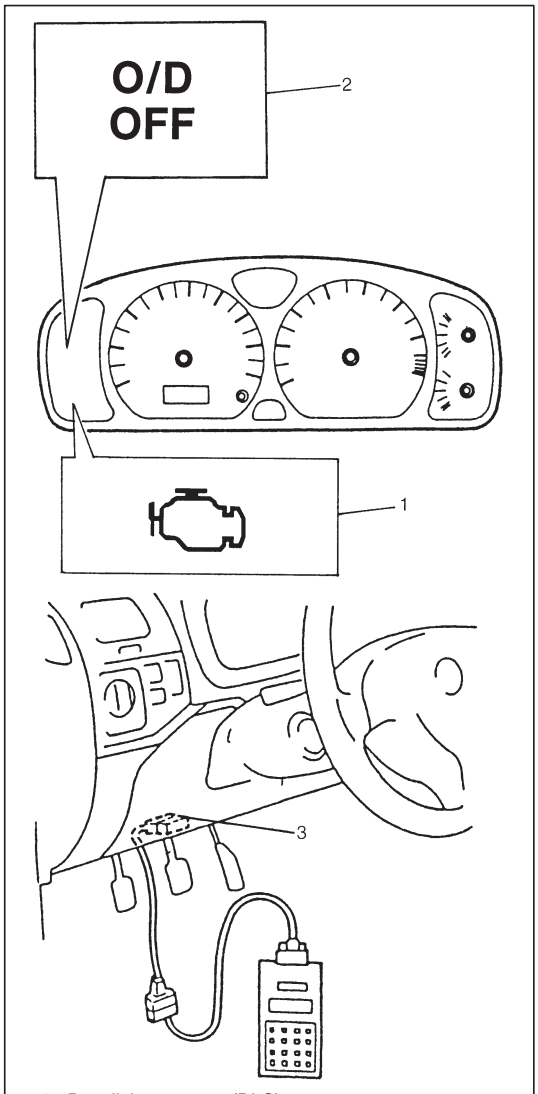

3. Data link connector (DLC)

PRECAUTIONS IN DIAGNOSING TROUBLES

[PRECAUTIONS IN IDENTIFYING DIAGNOSTIC TROUBLE CODE]

- For the vehicle with EGR valve, MIL (1) comes on when TCM detects the malfunction of transmission system. But MIL does not come on in case of DTC P0710 (DTC 36 and 38).
- The DTC stored in the TCM memory is output by flashing of “O/D OFF” light (2) with the diagnosis switch terminal grounded.
- If no DTC is stored in the TCM memory, Code 12 is output repeatedly.
- If DTCs are stored in the TCM memory, they are output starting from the smallest code number in the increasing order. After all DTCs are output, all DTCs output again.

[INTERMITTENT TROUBLES] and [NOTES ON SYSTEM CIRCUIT INSPECTION]
Refer to SECTION 0A.

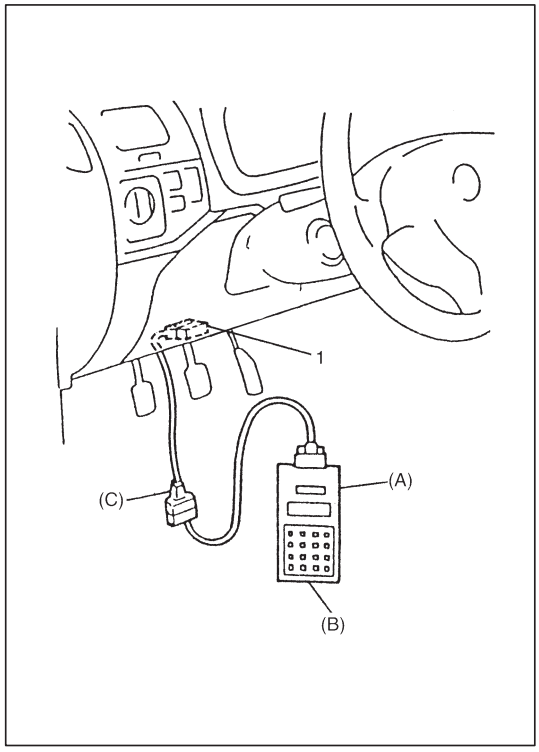

DIAGNOSTIC TROUBLE CODE(S) CHECK

[Check DTC with SUZUKI scan tool]

1) Turn ignition switch OFF.
2) After setting cartridge to SUZUKI scan tool, connect it to data link connector (DLC) (1) located on underside of instrument panel at driver's seat side.

   Special Tool
   (A): 09931-76011 (SUZUKI scan tool)
   (B): Mass storage cartridge
   (C): 09931-96030 (16/14 pin DLC cable)

3) Turn ignition switch ON.
4) Read DTC according to instructions displayed on scan tool and print it or write it down. Refer to SUZUKI scan tool operator's manual for further details.
5) After completing the check, turn ignition switch OFF and disconnect scan tool from data link connector (DLC).

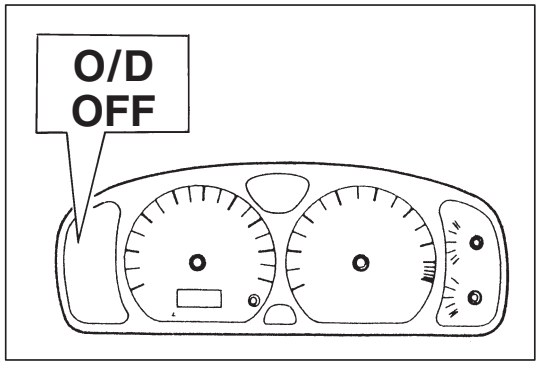

[Check DTC without SUZUKI scan tool]

1) Turn ignition switch ON and make sure that O/D OFF light is OFF in combination meter (O/D cut switch OFF).

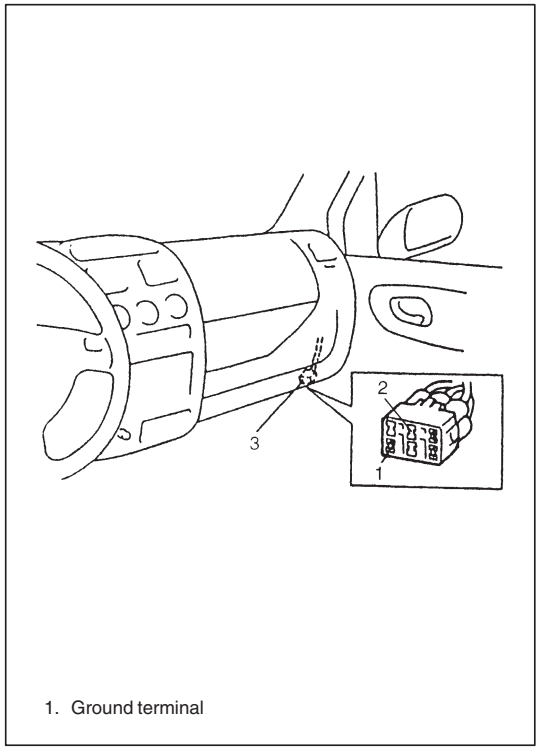

1. Ground terminal

2) Turn ignition switch OFF.
3) Using service wire, ground diagnosis switch terminal (2) of monitor coupler (3).

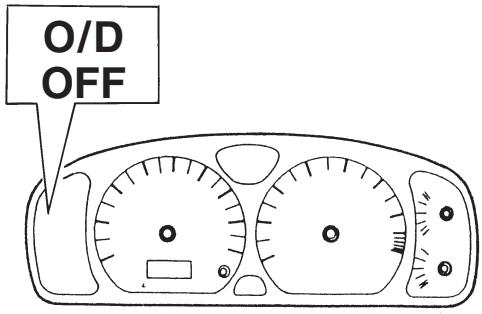

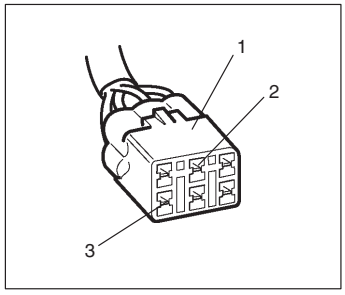

2. Diag. switch terminal
3. Ground terminal

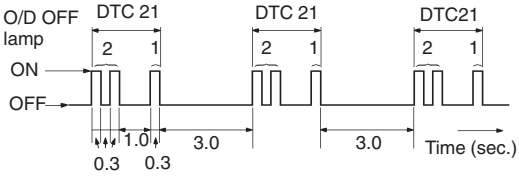

4) Read DTC from flashing pattern of O/D OFF light.
5) After completing the DTC check, turn ignition switch OFF and disconnect service wire from monitor coupler (1).

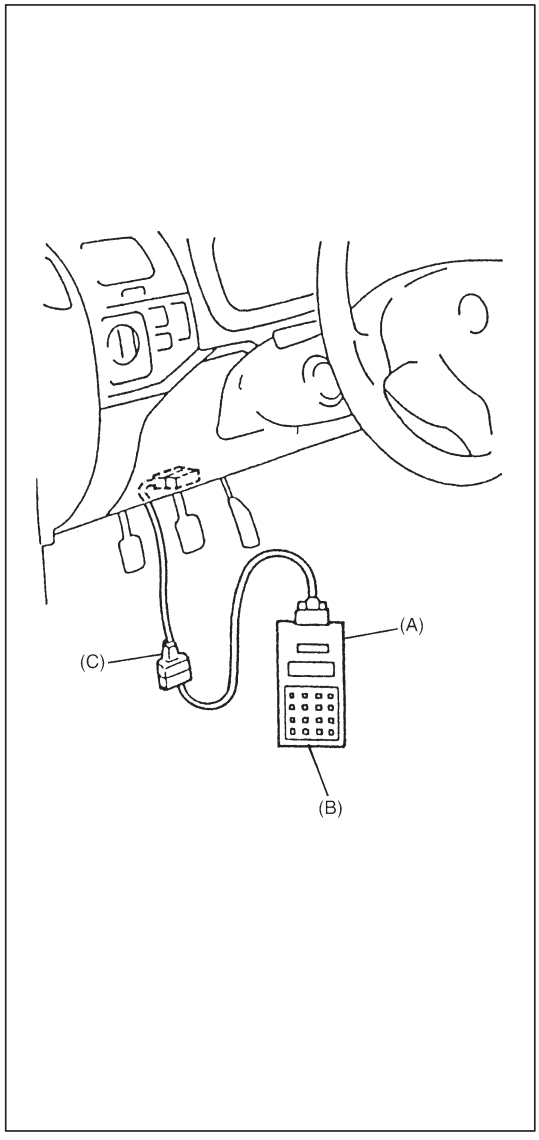

DIAGNOSTIC TROUBLE CODE(S) (DTC) CLEARANCE

[Clear DTC with SUZUKI scan tool]

1) Turn ignition switch OFF.
2) After setting cartridge to scan tool, connect it to data link connector (DLC) located on underside of instrument panel at driver's seat side.

   Special Tool
   (A): 09931-76011 (SUZUKI scan tool)
   (B): Mass storage cartridge
   (C): 09931-76030 (16/14 pin DLC cable)

3) Turn ignition switch ON.
4) Erase DTC according to instructions displayed on scan tool. Refer to SUZUKI scan tool operator's manual for further details.
5) After completing the check, turn ignition switch OFF and disconnect scan tool from data link connector (DLC).

[Clear DTC without SUZUKI scan tool]

1) Turn ignition switch ON.
2) Using service wire, ground diagnosis switch terminal of monitor coupler five times within 10 seconds.
3) Perform "DTC check" and confirm that only DTC12 (normal DTC) is displayed. If not, repeat step 1) and 2) and check again.

DIAGNOSTIC TROUBLE CODE (DTC) TABLE

EXAMPLE: SHIFT SOLENOID No.1 FAILURE (CODE No. 21)

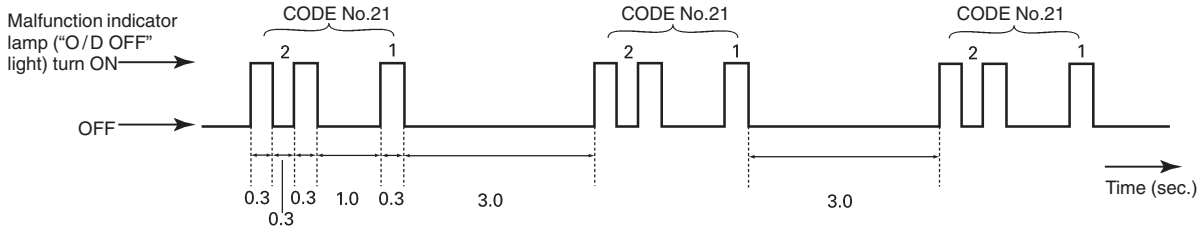

DTC			DIAGNOSTIC ITEM
Displayed on SUZUKI scan tool	"O/D OFF" lamp flashing pattern		
NO DTC	12		Normal
P0715	14		Input revolution sensor
P0730	18		Input revolution sensor signal circuit, A/T VSS signal circuit or automatic transmission itself
P0753	21		Shift solenoid No.1 circuit
	22		
P0758	23		Shift solenoid No.2 circuit
	24		
P0743	25		Lock-up solenoid No.2 circuit
	26		
P0741	29		Torque converter clutch
P0720	31		A/T VSS signal circuit
P1700	32		Throttle opening signal circuit
	33		
P0705	34		Shift range switch
P0725	35		Engine revolution signal circuit
P0710	36		A/T fluid temperature signal circuit
	38		
P0763	43		Shift solenoid No.3 circuit
P0768	45		Shift solenoid No.4 circuit
P0773	48		Shift solenoid No.5 circuit
P1709	51		Engine coolant temperature signal circuit
P0702 P1702	52		Internal malfunction of TCM

TCM POWER AND GROUND CIRCUIT CHECK
(AUTOMATIC TRANSMISSION DOESN'T SHIFT TO 1ST GEAR AT VEHICLE START IN "D" RANGE)

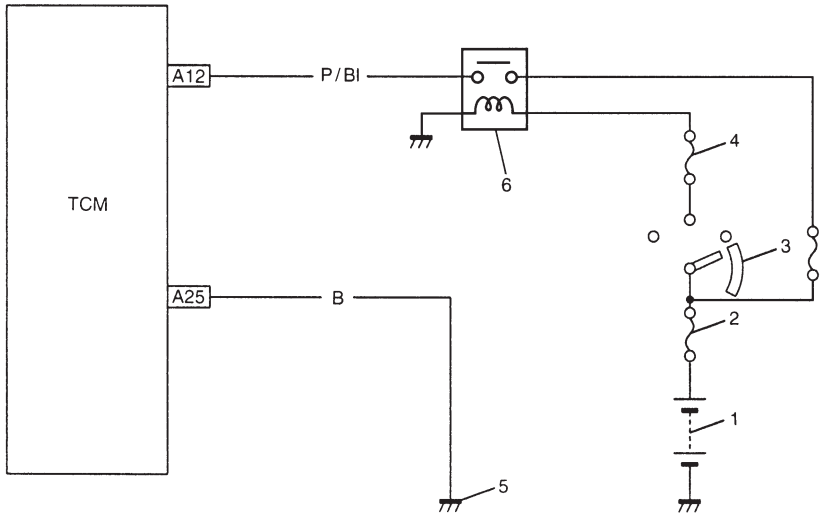

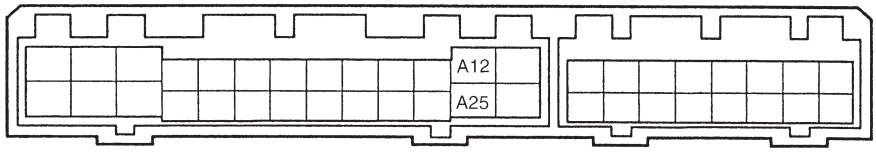

Terminal arrangement of TCM coupler
(Viewed from harness side)

1. Battery
2. Main fuse
3. Ignition switch
4. Circuit fuse (IG)
5. Ground
6. A/T relay

STEP	ACTION	YES	NO
1	Check voltage between terminal "A12" of TCM coupler and body ground with ignition switch ON. Is it 10 – 14 V?	Go to Step 2.	"P/Bl" wire open or faulty A/T relay.
2	Check voltage between terminal "A25" of TCM coupler and body ground with ignition switch ON. Is it about 0 V?	Poor "A12" or "A25" connection. If all above are OK, replace known-good TCM and recheck.	"B" wire open.

DTC 14 – INPUT REV. SENSOR SIGNAL
(INPUT SIGNAL TOO HIGH OR TOO LOW)

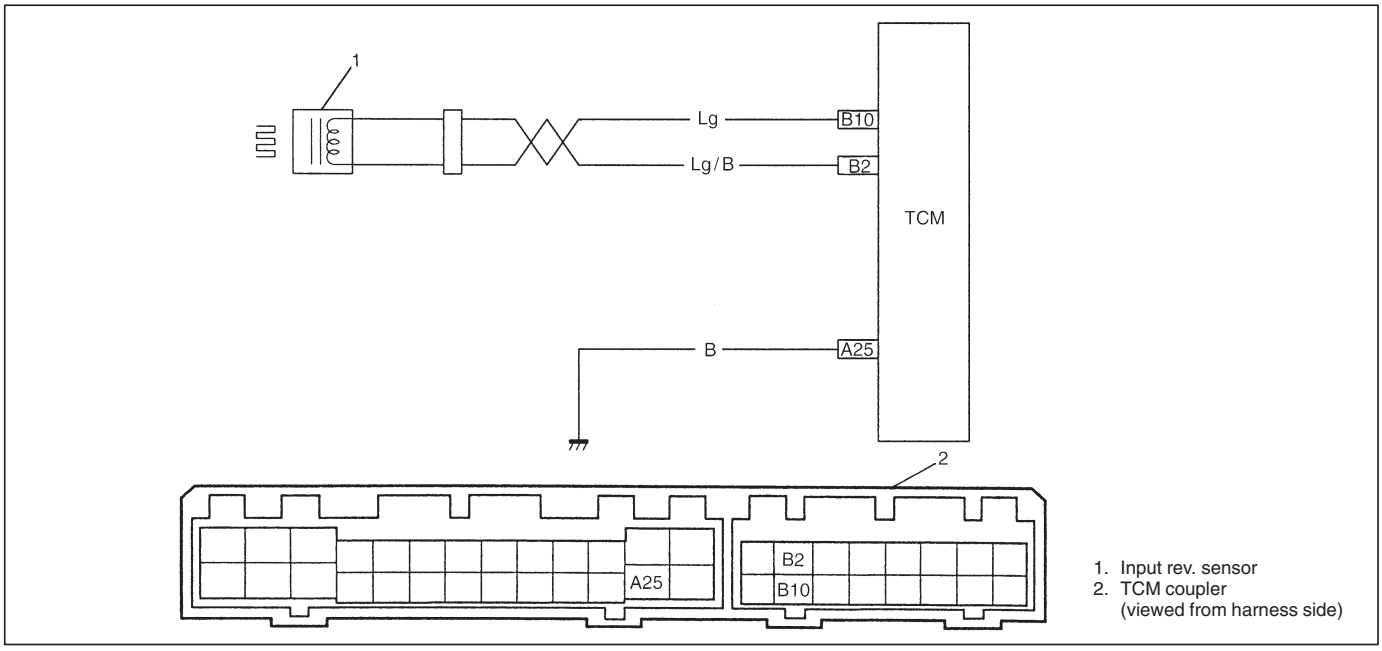

STEP	ACTION	YES	NO
1	1) Turn ignition switch OFF and disconnect A/T VSS – input rev. sensor coupler. 2) Measure resistance between terminals of the disconnected sensor side coupler. (See figure below.) Is it 160 – 200 Ω?	Go to Step 2.	Replace input rev. sensor.
2	1) Connect A/T VSS – input rev. sensor coupler then disconnect TCM couplers. 2) Measure resistance between terminal “B10” and “B2” of disconnected harness side coupler. Is it 160 – 200 Ω?	Go to Step 3.	Open “Lg” or “Lg/B” wire or shorted to each other.
3	1) Turn ignition switch OFF and connect input rev. sensor coupler then disconnect TCM couplers. 2) Measure resistance between terminal “B10” (of disconnected harness side coupler) and body ground then terminal “B2” (of disconnected harness side coupler) and body ground. (See figure below.) Are they about 0 Ω?	Short in between “Lg” wire to ground or “Lg/B” wire to ground.	Poor connection of terminal “B10” or “B2” of TCM. If all the above are in good condition, the cause can be a “temporary malfunction” of the TCM.

Figure for step 1

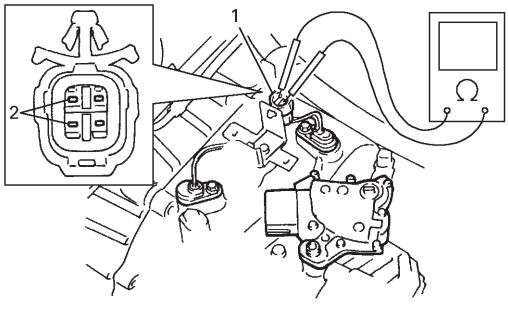

1. A/T VSS – turbine rev. sensor coupler
2. Input rev. sensor terminal

Figure for step 3

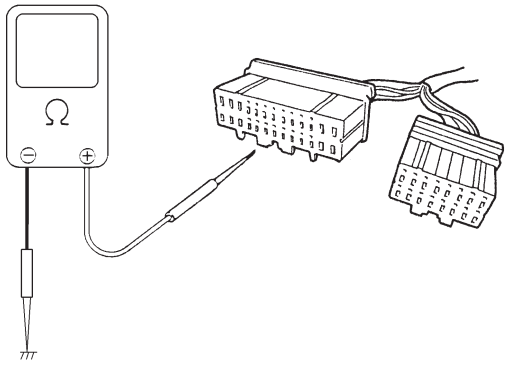

DTC 18 – INPUT REV. SENSOR, A/T VSS OR A/T ITSELF (INPUT VEHICLE SPEED TOO HIGH OR TOO LOW COMPARING TO INPUT REV. SENSOR SIGNAL)

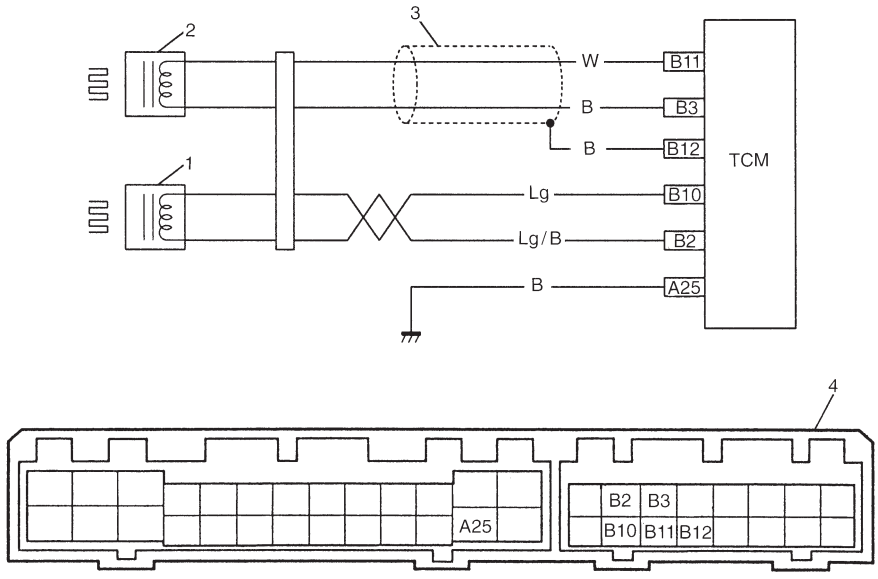

1. Input rev. sensor
2. A/T VSS
3. Shield wire
4. TCM coupler (viewed from harness side)

STEP	ACTION	YES	NO
1	Check if DTC 14 or 31 is displayed. Is DTC 14 or 31 displayed?	Inspect according to DTC 14 or 31 flow table first.	Diagnose the faulty condition according to “DIAGNOSIS” in this section.

DTC 21 – SHIFT SOLENOID NO.1
23 – SHIFT SOLENOID NO.2
25 – LOCK-UP SOLENOID
(SHIFT SOLENOID OUTPUT VOLTAGE TOO HIGH EVEN THOUGH TCM ORDERS SHIFT SOLENOID TO TURN OFF)

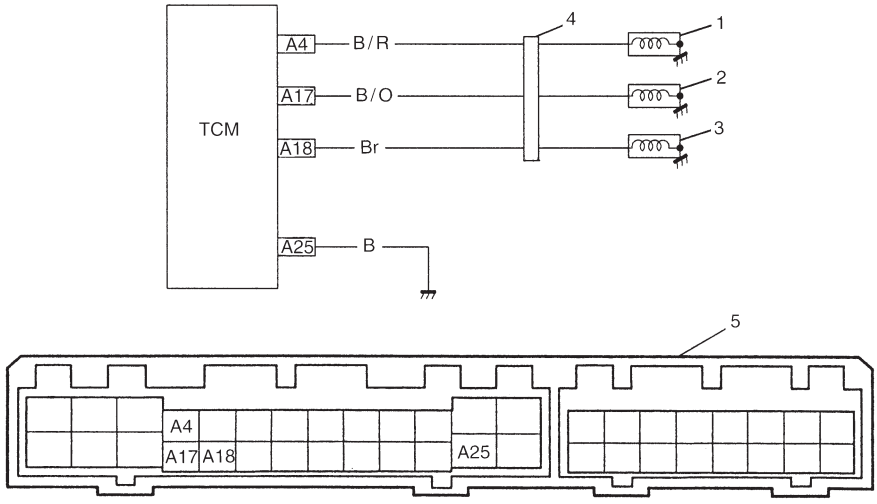

1. Shift solenoid No.1
2. Shift solenoid No.2
3. Lock-up solenoid
4. Solenoid coupler
5. TCM coupler (viewed from harness side)

STEP	ACTION	YES	NO
1	1) Turn ignition switch OFF and disconnect shift solenoid coupler. 2) Measure the resistance between each solenoid terminal of the solenoid coupler and transmission ground. (See chart and figure below.) Is it about 12 Ω?	Go to Step 2.	● Broken solenoid lead wire. ● Malfunction of solenoid valve.
2	1) Connect shift solenoid coupler then disconnect TCM couplers. 2) Measure the resistance between each solenoid terminal of the disconnected harness side TCM coupler and body ground. (See chart and figure below.) Is it about 12 Ω?	Go to Step 3.	Broken “Br”, “B/R” or “B/O” wire or poor connection of solenoid coupler.
3	Turn ignition switch ON then measure voltage between terminal “A4”, “A17” or “A18” of disconnected harness side TCM coupler and body ground. Is it about 0 V?	Poor connection at terminal “A4”, “A17” or “A18”of TCM. If all the above are in good condition, the cause can be a “temporary malfunction” of the TCM.	“Br”, “B/R” or “B/O” wire or solenoid lead wire shorted to power source circuit.

Solenoid	Terminal Number	Lead Wire Color (between TCM and solenoid coupler)
Shift solenoid No.1	A4	B/R
Shift solenoid No.2	A17	B/O
Lock-up solenoid	A18	Br

Figure for step 1

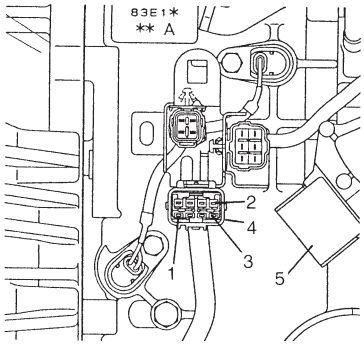

1. Shift solenoid No.1 terminal
2. Shift solenoid No.2 terminal
3. Lock-up solenoid terminal
4. Solenoid coupler
5. Shift switch

Figure for steps 2 and 3

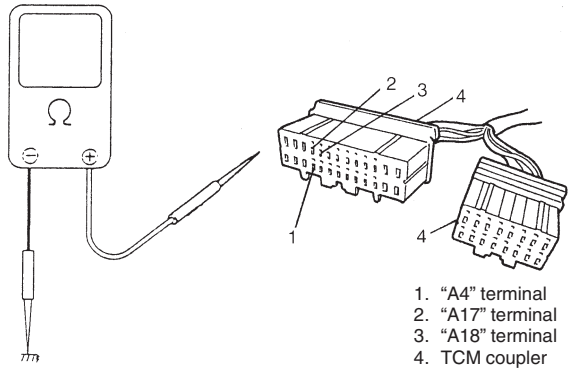

1. “A4” terminal
2. “A17” terminal
3. “A18” terminal
4. TCM coupler

DTC 22 – SHIFT SOLENOID NO.1
24 – SHIFT SOLENOID NO.2
26 – LOCK-UP SOLENOID

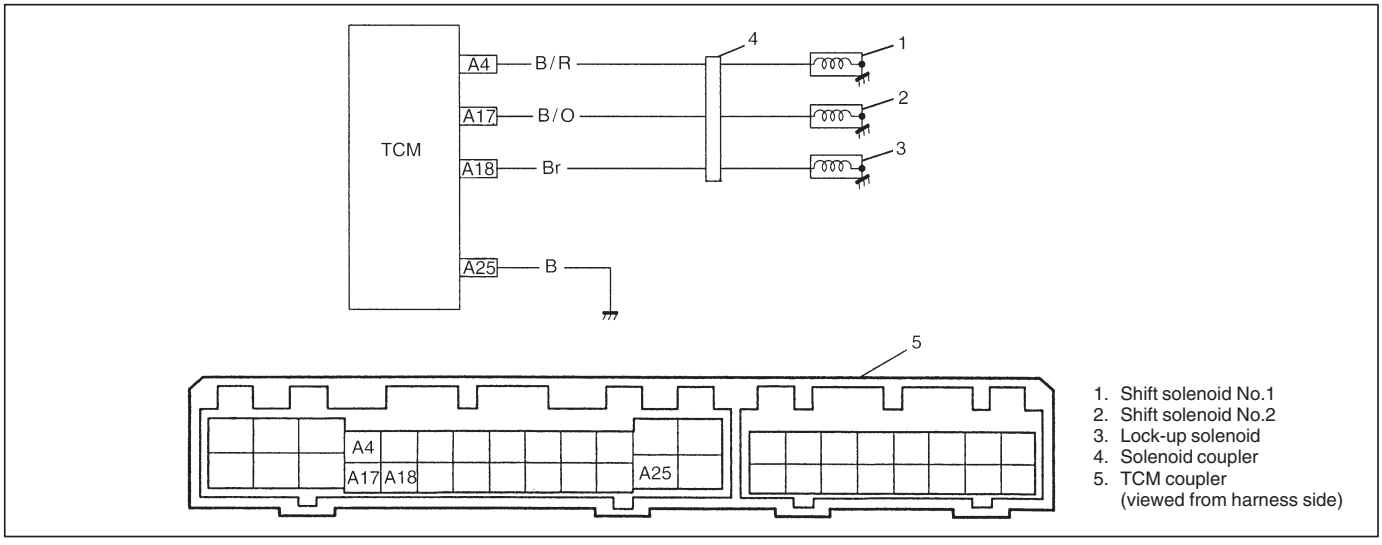

STEP	ACTION	YES	NO
1	1) Turn ignition switch OFF and disconnect solenoid coupler. 2) Measure the resistance between each solenoid terminal of solenoid coupler and transmission ground. (See chart and figure below.) Is it about 12 Ω?	Go to Step 2.	● Short in between solenoid lead wire and ground. ● Malfunction of shift solenoid valve.
2	1) Disconnect TCM couplers. 2) Measure the resistance between terminal "A4", "A17" or "A18" of the disconnected harness side TCM coupler and body ground. (See figure below.) Is it about 0 Ω?	Short in between "B/R", "B/O" or "Br" wire and ground.	The cause can be a "temporary malfunction" of the TCM.

Solenoid	TCM Terminal Number	Lead Wire Color (between TCM and solenoid coupler)
Shift solenoid No.1	A4	B/R
Shift solenoid No.2	A17	B/O
Lock-up solenoid	A18	Br

Figure for step 1

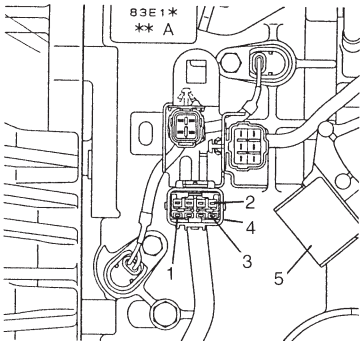

1. Shift solenoid No.1 terminal
2. Shift solenoid No.2 terminal
3. Lock-up solenoid terminal
4. Solenoid coupler
5. Shift switch

Figure for step 2

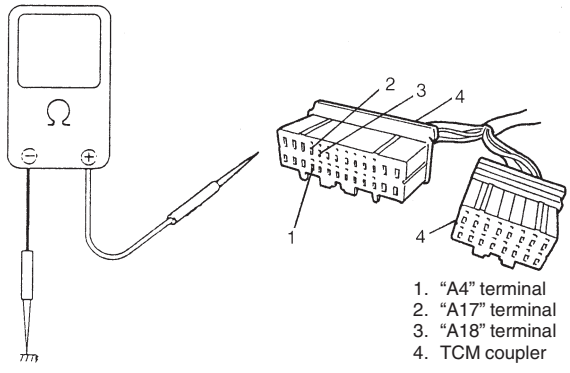

1. "A4" terminal
2. "A17" terminal
3. "A18" terminal
4. TCM coupler

DTC 29 – LOCK-UP CLUTCH

- Substitute known-good torque converter and recheck.
- Check if fluid has an odor and is discolored, and replace as necessary.

DTC 31 – A/T VEHICLE SPEED SENSOR (A/T VSS) (INPUT VOLTAGE TOO HIGH OR TOO LOW)

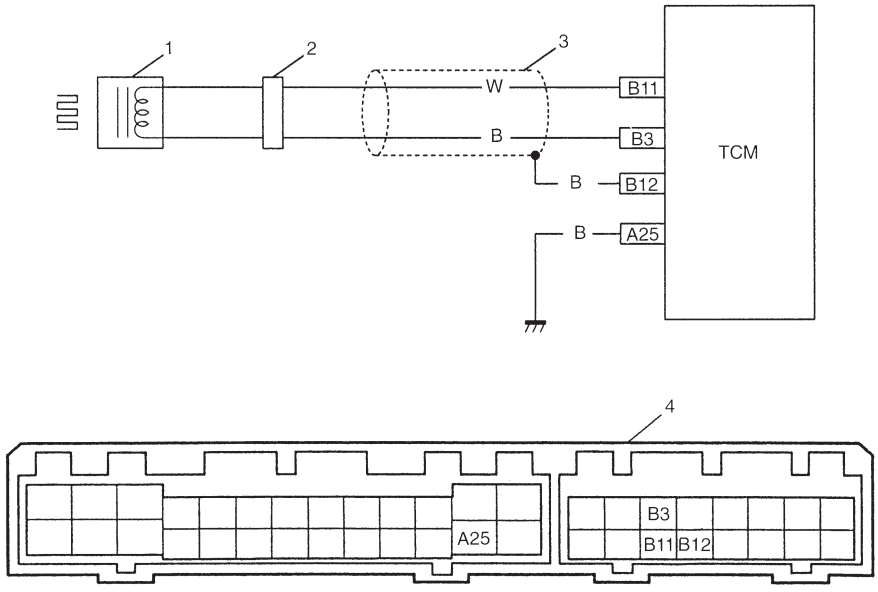

1. A/T VSS
2. Coupler
3. Shield wire
4. TCM coupler (viewed from harness side)

STEP	ACTION	YES	NO
1	1) Turn ignition switch OFF and disconnect A/T VSS – input rev. sensor coupler. 2) Measure resistance between terminals of disconnected sensor side coupler. (See figure below.) Is it 160 – 200 Ω?	Go to Step 2.	Replace A/T VSS.
2	1) Connect A/T VSS coupler then disconnect TCM couplers. 2) Measure resistance between terminal “B11” and “B3” of disconnected harness side coupler. (See figure below.) Is it 160 – 200 Ω?	Go to Step 3.	Broken “W” or “B” wire or shorted to each other.
3	1) Turn ignition switch OFF and disconnect A/T VSS – input rev. sensor coupler. 2) Measure resistance between terminal “3” (of disconnected sensor side coupler) – body ground then terminal “4” (of disconnected sensor side coupler) – body ground. (See figure below.) Is it about 0 Ω?	Replace A/T VSS.	Go to Step 4.

STEP	ACTION	YES	NO
4	1) Turn ignition switch OFF and connect A/T VSS coupler. 2) Measure resistance between terminal “B11” (of disconnected harness side coupler) – body ground then terminal “B3” (of disconnected harness side coupler) – body ground. Is it about 0 Ω?	Short in between “W” wire and ground or “B” wire and ground.	Go to Step 5.
5	Measure resistance between terminal “B11” – “B12” (of disconnected harness side coupler) then terminal “B3” – “B12” (of disconnected harness side coupler). Is it about 0 Ω?	“W” wire or “B” wire shorted to shield portion.	Poor connection of terminal “B11” or “B3” of the TCM. If all the above are in good condition, the cause can be a temporary malfunction of the TCM or the TCM itself.

Figure for step 1, 2

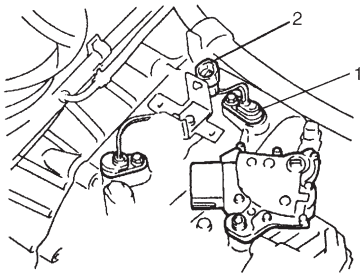

1. A/T VSS
2. A/T VSS – input rev. sensor coupler

Figure for step 3

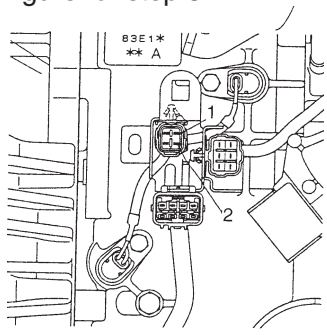

1. Terminal “3”
2. Terminal “4”

Figure for step 2, 5

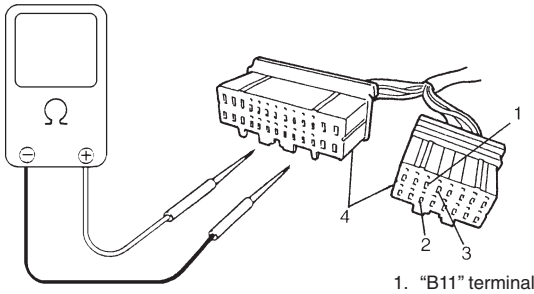

1. “B11” terminal
2. “B3” terminal
3. “B12” terminal
4. TCM coupler

Figure for step 4

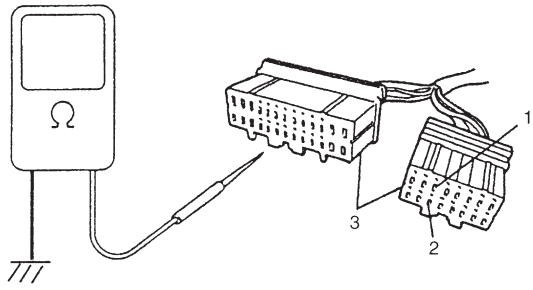

1. “B11” terminal
2. “B3” terminal
3. TCM coupler

DTC 32 – THROTTLE POSITION SIGNAL
(THROTTLE OPENING SIGNAL OF OVER 100% INPUTTED)

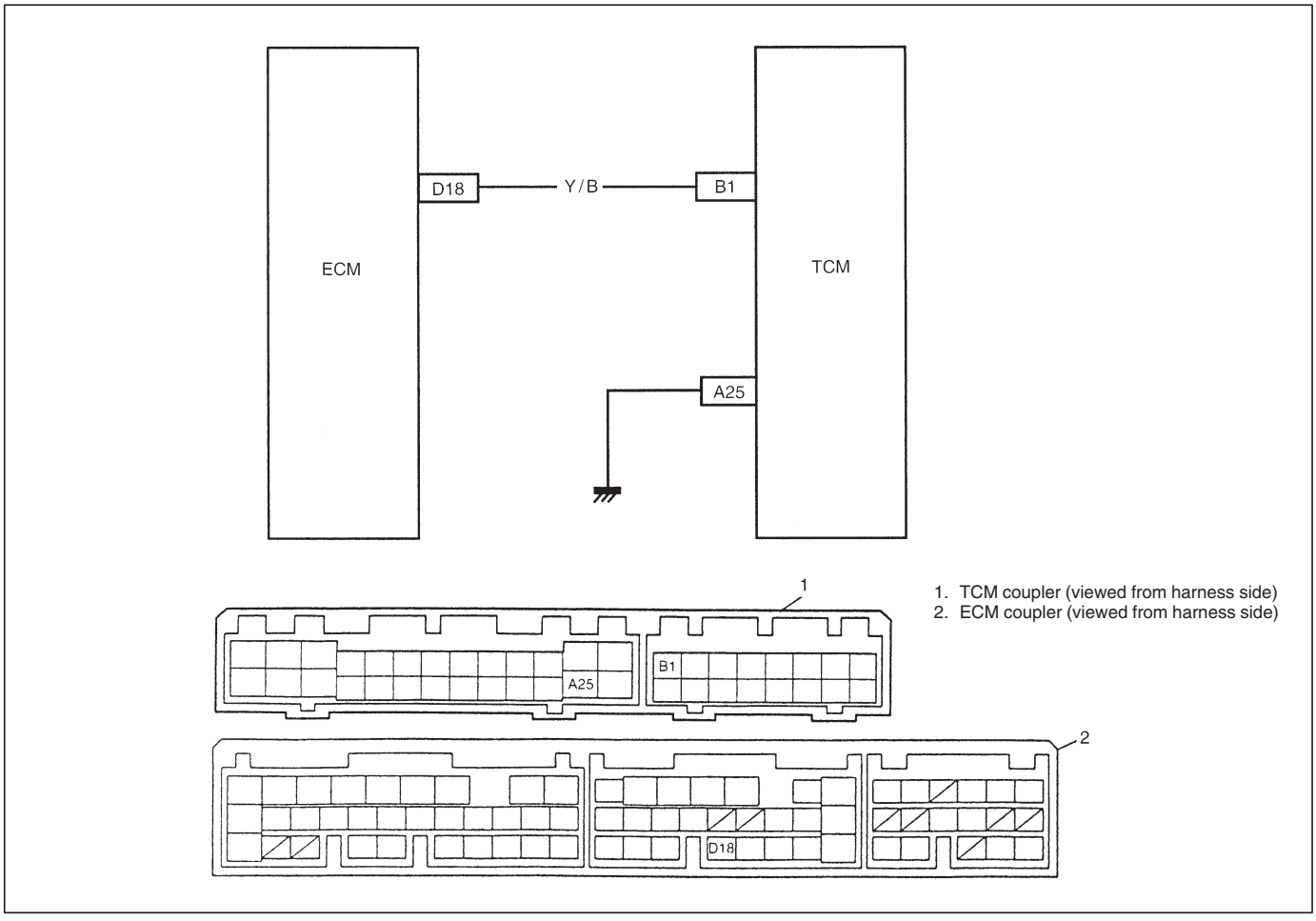

STEP	ACTION	YES	NO
1	Check throttle opening signal referring to Section 6E. Is it OK?	Intermittent trouble or faulty TCM. Recheck referring to “Intermittent trouble” in Section 0B.	Go to Step 2.
2	Check DTC of electronic fuel injection system referring to Section 6E. Does the DTC show normal code?	Go to Step 3.	Inspect and repair referring to DTC flow table of electronic fuel injection system in Section 6E.
3	1) Turn ignition switch OFF and disconnect TCM and ECM couplers. 2) Check resistance between terminal “B1” of disconnected harness side TCM coupler and body ground. Is it infinity?	Go to Step 4.	“Y/B” wire shorted to ground.
4	1) Connect TCM couplers. 2) Turn ignition switch ON and check voltage between terminal “D18” of disconnected harness side ECM coupler and body ground. Is it 10 – 14 V?	Intermittent trouble or faulty ECM. Substitute a known-good ECM and recheck.	Substitute a known-good TCM and recheck.

DTC 33– THROTTLE POSITION SIGNAL
(THROTTLE OPENING SIGNAL OF UNDER 0% INPUTTED OR INPUT SIGNAL FIXED TO HIGH (12V) OR LOW (0V))

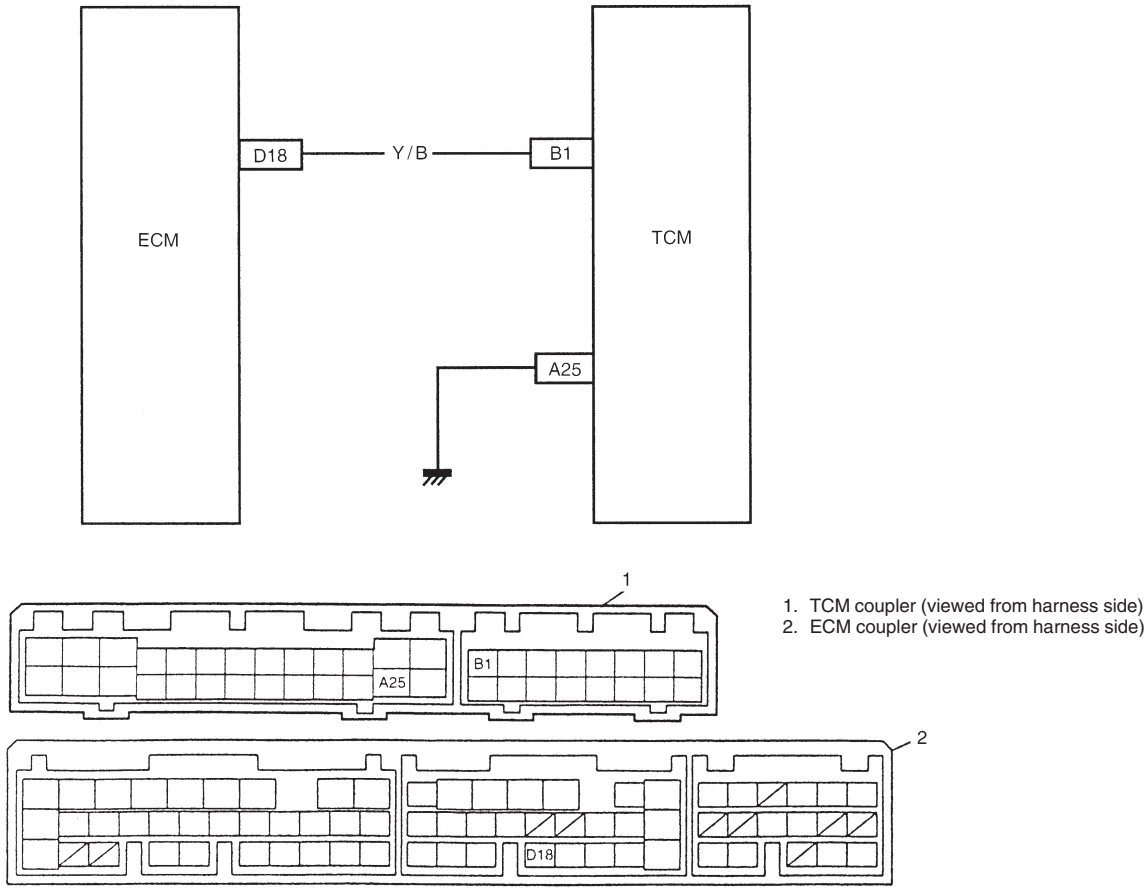

STEP	ACTION	YES	NO
1	Check throttle opening signal referring to Section 6E. Is it OK?	Intermittent trouble or faulty TCM. Recheck referring to “Intermittent trouble” in Section 0B.	Go to Step 2.
2	Check DTC of electronic fuel injection system referring to Section 6E. Does the DTC show normal code?	Go to Step 3.	Inspect and repair referring to DTC table of electronic fuel injection system in Section 6E.
3	1) Turn ignition switch OFF and disconnect ECM couplers. 2) Turn ignition switch ON and check voltage between terminal “D18” of disconnected harness side ECM coupler and body ground. Is it 10 – 14 V?	Poor connection of terminal “D18” of ECM coupler. If connection is OK, substitute a known-good ECM and recheck.	“Y/B” wire open or poor “B1” connection of TCM coupler. If wire and connection are OK, substitute a known-good TCM and recheck.

DTC 34 – SHIFT SWITCH
(NO SHIFT SWITCH SIGNAL INPUTTED OR TWO OR MORE SHIFT SWITCH SIGNALS INPUTTED AT THE SAME TIME)

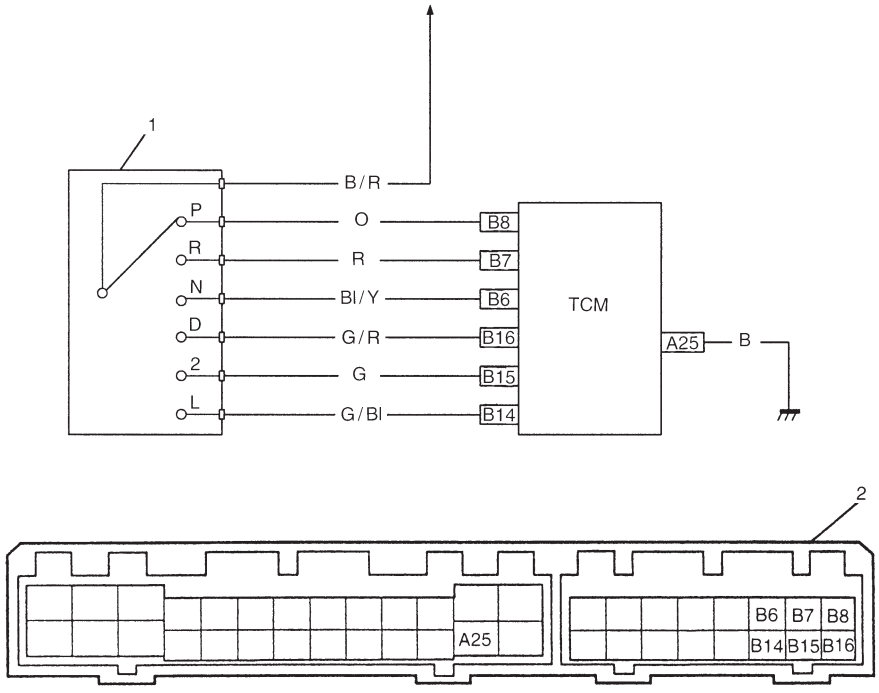

1. Shift switch
2. TCM coupler (viewed from harness side)

STEP	ACTION	YES	NO
1	1) Turn ignition switch OFF, disconnect TCM coupler. 2) Turn ignition switch ON, check voltage between terminal “B8” and “A25” of disconnected harness side TCM coupler. Is it 10 – 14 V at “P” range and 0 V at other range?	Go to Step 2.	Go to Step 7.
2	While ignition switch ON, check voltage between terminal “B7” and “A25” of disconnected harness side TCM coupler. Is it 10 – 14 V at “R” range and 0 V at other range?	Go to Step 3.	Go to Step 7.
3	While ignition switch ON, check voltage between terminal “B6” and “A25” of disconnected harness side TCM coupler. Is it 10 – 14 V at “N” range and 0 V at other range?	Go to Step 4.	Go to Step 7.
4	While ignition switch ON, check voltage between terminal “B16” and “A25” of disconnected harness side TCM coupler. Is it 10 – 14 V at “D” range and 0 V at other range?	Go to Step 5.	Go to Step 7.
5	While ignition switch ON, check voltage between terminal “B15” and “A25” of disconnected harness side TCM coupler. Is it 10 – 14 V at “2” range and 0 V at other range?	Go to Step 6.	Go to Step 7.

STEP	ACTION	YES	NO
6	While ignition switch ON, check voltage between terminal “B14” and “A25” of disconnected harness side TCM coupler. Is it 10 – 14 V at “L” range and 0 V at other range?	Intermittent trouble or faulty TCM. Check for intermittent trouble referring to “Intermittent troubles” in Section 0B.	Go to Step 7.
7	Check shift switch referring in this section. Is it OK?	Shift switch wire shorted. If wire harnesses are OK, substitute a known-good TCM and recheck.	Replace shift switch.

DTC 35 – ENGINE REV. SIGNAL
(NO ENGINE REV. SIGNAL INPUTTED EVEN THOUGH STANDARD VALUE OF VEHICLE SPEED SIGNAL AND THROTTLE OPENING SIGNAL INPUTTED)

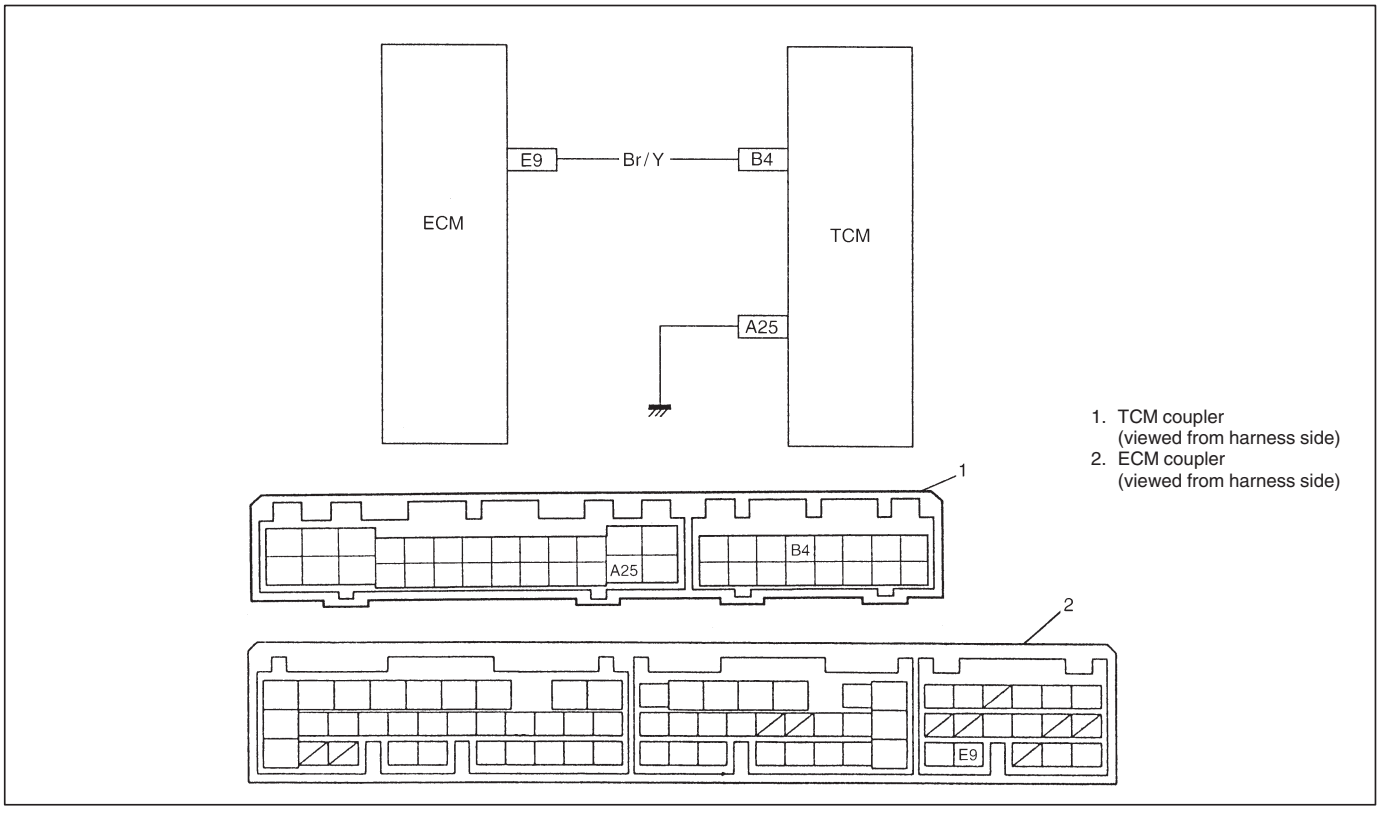

STEP	ACTION	YES	NO
1	Check DTC of electronic fuel injection system referring to Section 6E. Does the DTC show normal code?	Go to Step 2.	Inspect and repair referring to DTC flow table of electronic fuel injection system in Section 6E.
2	1) Turn ignition switch OFF and disconnect ECM and TCM couplers. 2) Check continuity between “E9” and “B4”. Is there continuity?	Go to Step 3.	“Br/Y” wire open.
3	1) Turn ignition switch OFF and disconnect TCM and ECM couplers. 2) Check resistance between terminal “B4” of disconnected harness side TCM coupler and body ground. Is it infinity?	Go to Step 4.	“B4” wire shorted to ground.
4	1) Turn ignition switch OFF and connect TCM couplers. 2) Turn ignition switch ON and check voltage between terminal “E9” of disconnected harness side ECM coupler and body ground. Is it 10 – 14 V?	Intermittent trouble or faulty ECM. Substitute a known-good ECM and recheck.	Substitute a known-good TCM and recheck.

DTC 36 – A/T FLUID TEMPERATURE SIGNAL
(NO A/T FLUID TEMPERATURE SIGNAL INPUTTED)

DTC 38 – A/T FLUID TEMPERATURE SIGNAL
(A/T FLUID TEMPERATURE SIGNAL INPUT VOLTAGE DOES NOT GO DOWN EVEN THOUGH STANDARD VALUE OF ENGINE REV. SIGNAL INPUTTED)

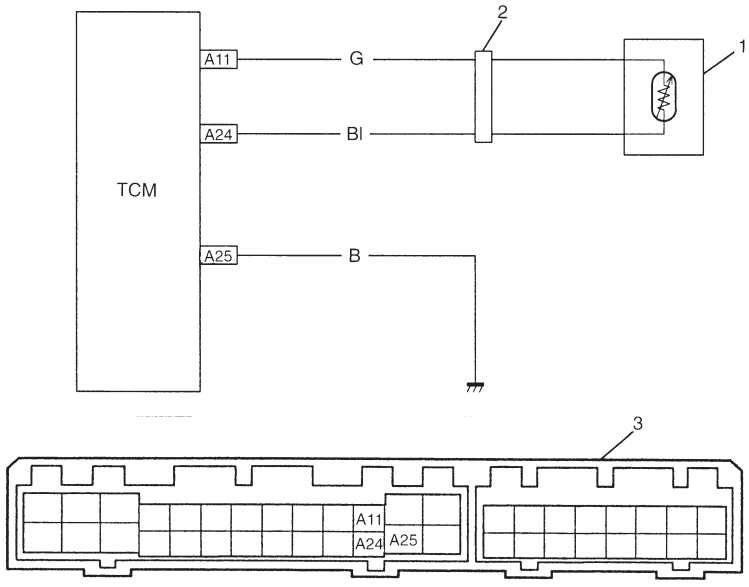

1. A/T fluid temperature sensor
2. Coupler
3. TCM coupler (viewed from harness side)

STEP	ACTION	YES	NO
1	1) Turn ignition switch OFF and disconnect solenoid wire harness coupler. 2) Turn ignition switch ON then measure voltage between “G” wire terminal of disconnected harness side coupler and engine ground. Is it about 5V?	Go to Step 2.	● Broken “G” lead wire or shorted to 12 V power source. ● Poor connection of “A11” terminal at TCM. If all the above are in good condition, substitute a known-good TCM and restart the troubleshooting.
2	1) Turn ignition switch OFF and connect solenoid wire harness coupler. 2) Turn ignition switch ON then measure voltage between “Bl” lead wire terminal of solenoid wire harness coupler and engine ground (with coupler connected). Is it about 5V?	Broken “Bl” lead wire or poor connection of “A24” terminal at TCM. If all the above are in good condition, substitute a known-good TCM and restart the troubleshooting.	Go to Step 3.
3	Check A/T fluid temperature sensor referring to A/T FLUID TEMPERATURE SENSOR INSPECTION in this section. Is it OK?	Short in between “G” lead wire and 5V power source or short in between A/T fluid temp. sensor lead wire and 5V power source. If all the above are in good condition, the cause can be a temporary malfunction of the TCM.	Replace A/T fluid temperature sensor.

DTC 43 – SHIFT SOLENOID NO.3
DTC 45 – SHIFT SOLENOID NO.4
DTC 48 – SHIFT SOLENOID NO.5

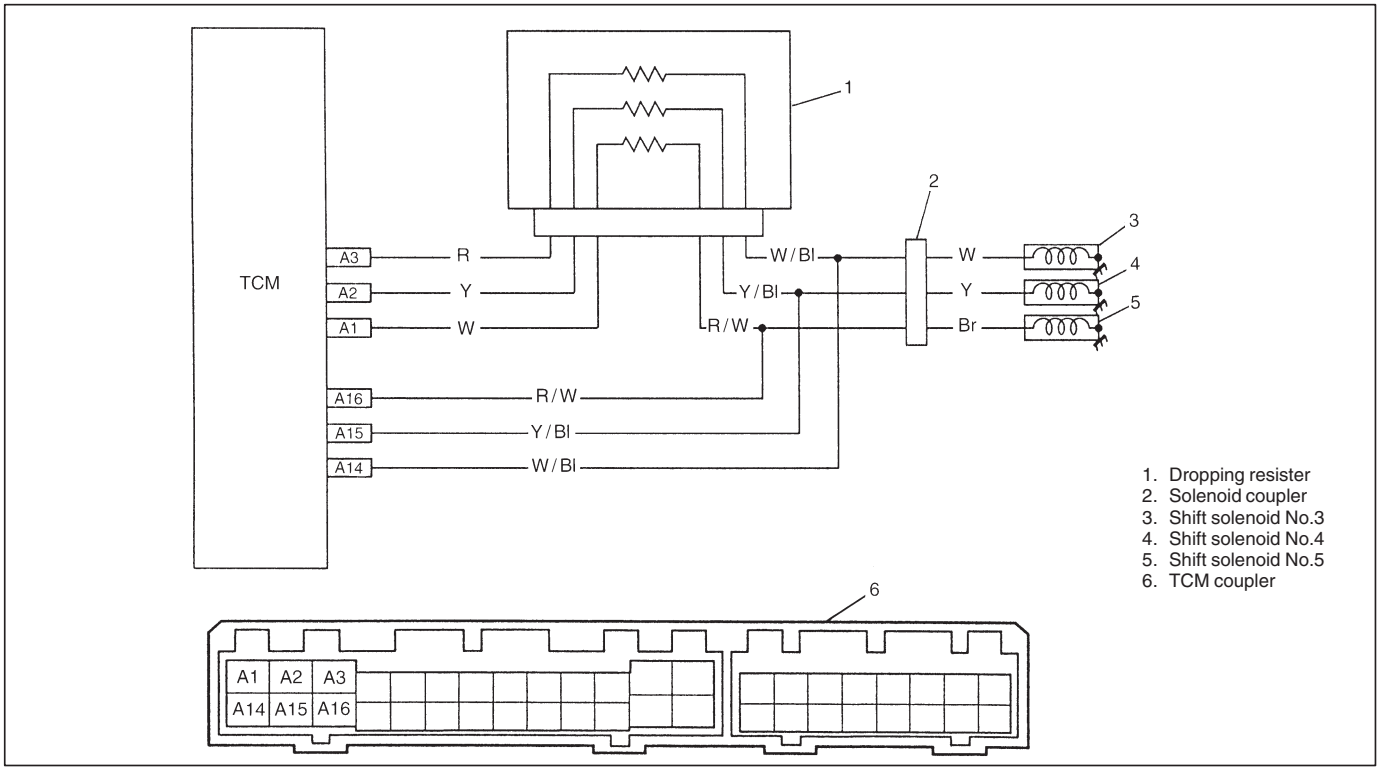

STEP	ACTION	YES	NO
1	1) Turn ignition switch OFF and disconnect solenoid coupler. 2) Measure resistance between terminal of solenoid coupler and transmission ground. (See figure below.) Is it about 3 Ω?	Go to Step 2.	● Short in between solenoid lead wire and ground. ● Malfunction of solenoid valve.
2	1) Disconnect TCM couplers. 2) Measure resistance between solenoid coupler terminal of body side and TCM coupler terminal connected to dropping resister (A1, A2 or A3). (See chart below.) Is it about 8 Ω?	Go to Step 3.	Inspect dropping resister referring to "ON-VEHICLE SERVICE" in this section. If OK, circuit between TCM and dropping resister or dropping resister and solenoid coupler is open.
3	Check continuity between terminal of TCM coupler and terminal of solenoid coupler. (See chart below.) Is there continuity?	Go to Step 4.	Circuit between TCM and solenoid coupler is open.
4	Check continuity between solenoid coupler terminal and transmission ground with TCM, dropping resister and solenoid couplers disconnected. Is there continuity?	Circuit between TCM and transmission is shorted to ground.	Go to Step 5.
5	Check continuity between dropping resister terminal and transmission ground. (See chart below.) Is there continuity?	Circuit between TCM and dropping resister is shorted to ground.	Substitute a known-good TCM and recheck.

Chart for step 2

Solenoid	TCM terminal No.	Solenoid coupler lead wire color (body side)
No.3	A3	W/Bl
No.4	A2	Y/Bl
No.5	A1	R/W

Chart for step 3

Solenoid	TCM terminal No.	Solenoid coupler lead wire color (body side)
No.3	A14	W/Bl
No.4	A15	Y/Bl
No.5	A16	R/W

Figure for step 1 and 5

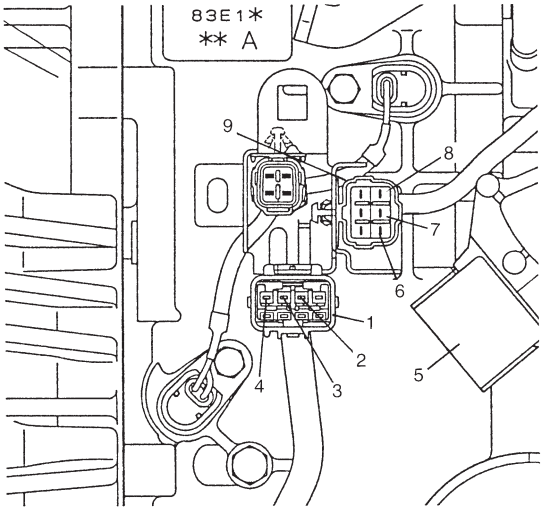

1. Solenoid coupler
2. Terminal for solenoid No.3
3. Terminal for solenoid No.4
4. Terminal for solenoid No.5
5. Shift switch
6. Dropping resister terminal for shift solenoid No.3
7. Dropping resister terminal for shift solenoid No.4
8. Dropping resister terminal for shift solenoid No.5
9. Dropping resister coupler

DTC 51 – ENGINE COOLANT TEMPERATURE SENSOR

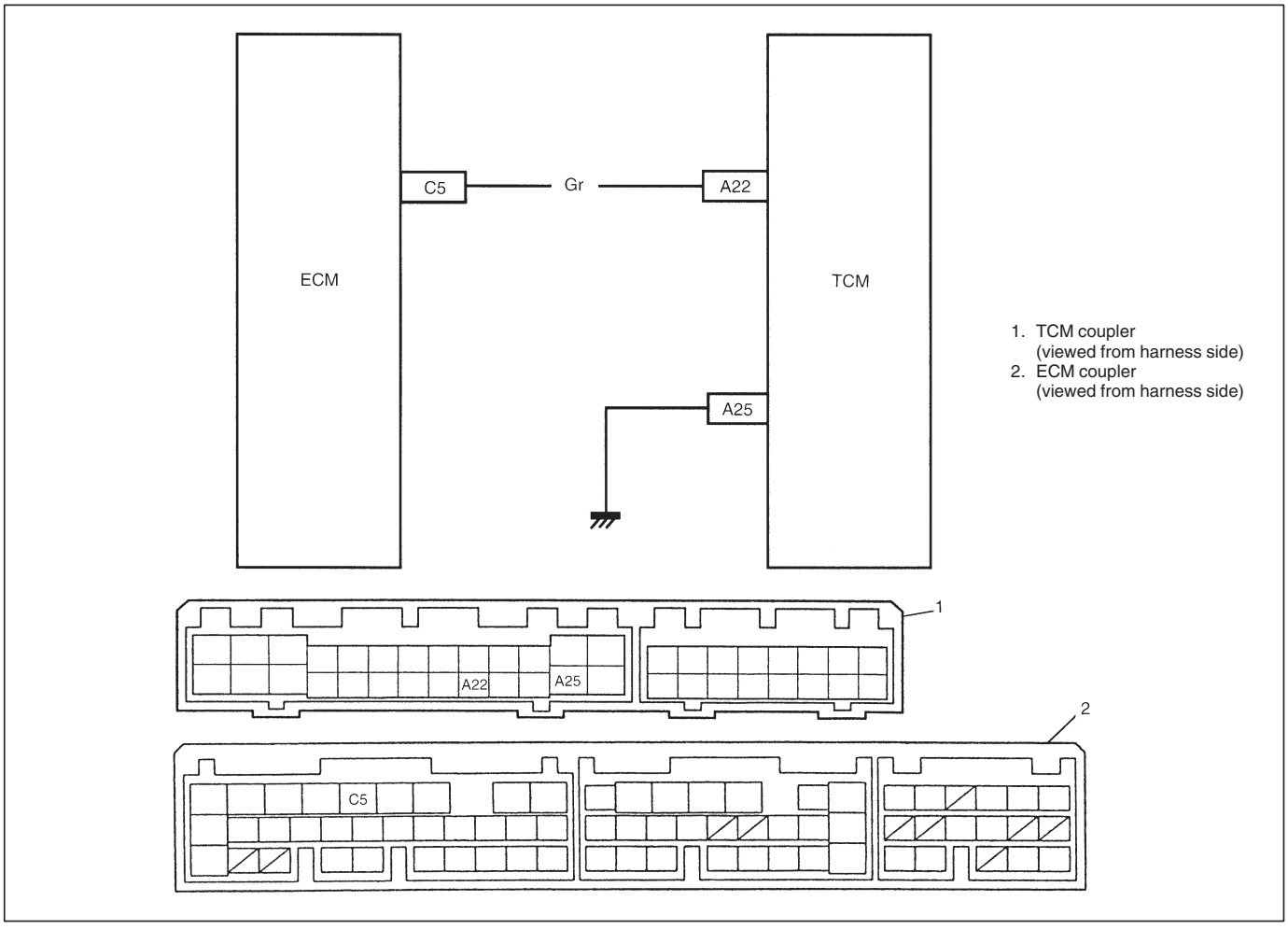

STEP	ACTION	YES	NO
1	1) Check DTC of “Engine and Emission Control System” referring to SECTION 6E. Are both ECT and MAP sensor circuits OK?	Go to Step 2.	Inspect and repair referring to the DTC flow table in SECTION 6E.
2	1) Turn ignition switch OFF and disconnect ECM and TCM couplers. 2) Check continuity between terminals “A22” and “C5” of harness. Is the continuity?	Go to Step 3.	“Gr” wire open.
3	Check resistance between terminal “A22” of disconnected harness side TCM coupler and body ground. Is it infinity?	Go to Step 4.	“Gr” wire shorted to ground.
4	1) Turn ignition switch OFF and connect TCM couplers. 2) Turn ignition switch ON and check voltage between terminal “C5” of disconnected harness side ECM coupler and body ground. Is it 0 V?	Substitute a known-good TCM and recheck.	Substitute a known-good ECM and recheck.

DTC 52 – POWER SOURCE RELAY IN TCM
(RELAY OUTPUT VOLTAGE TOO HIGH EVEN THOUGH TCM ORDERS THE RELAY TO TURN OFF OR RELAY OUTPUT VOLTAGE TOO LOW EVEN THOUGH TCM ORDERS THE RELAY TO TURN ON)

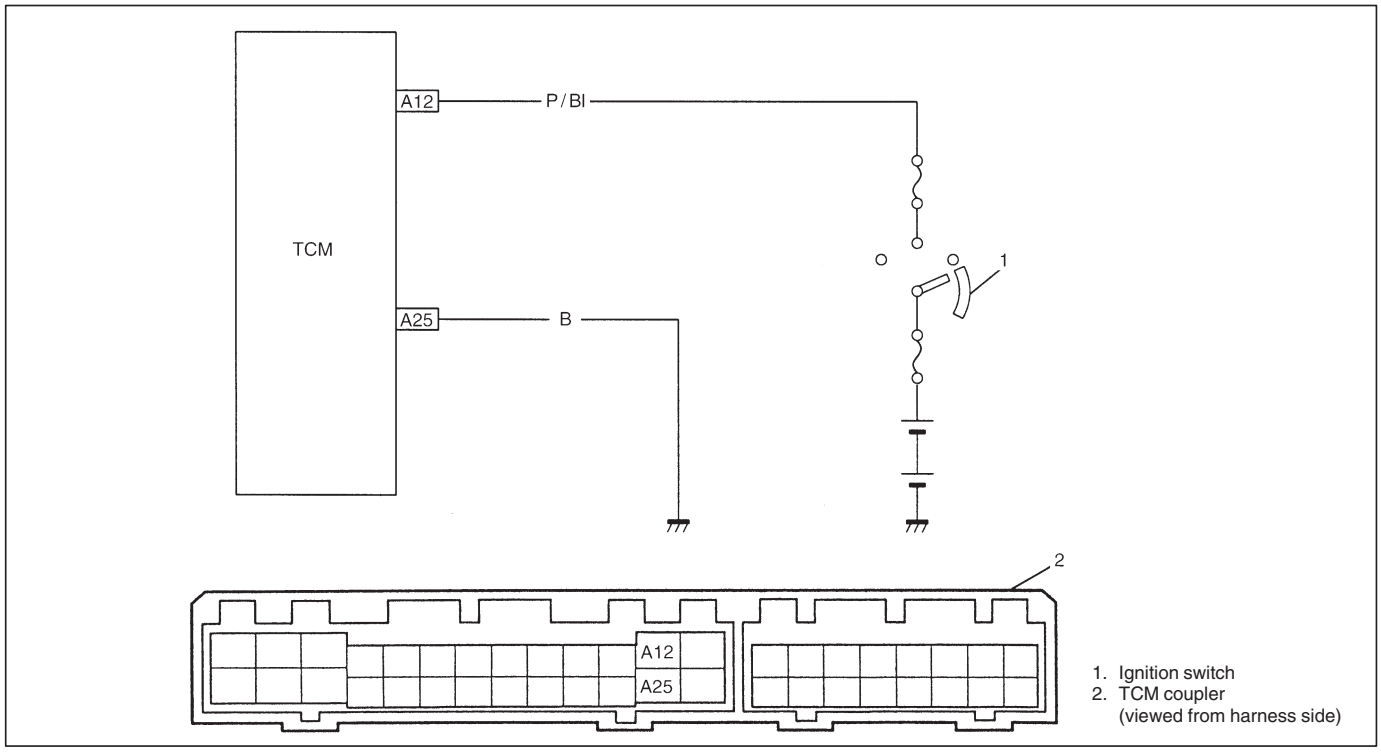

STEP	ACTION	YES	NO
1	1) Turn ignition switch ON. 2) Erase all DTCs referring to HOW TO CLEAR DTC in this section. 3) Turn ignition switch OFF. 4) Turn ignition switch ON once again and check for any DTC. Is it DTC P0702 (“O/D OFF” lamp flashing pattern 52)?	Replace TCM.	Could be a temporary malfunction of the TCM.

INSPECTION OF TCM AND ITS CIRCUITS

TCM and its circuits can be checked at TCM wiring couplers by measuring voltage and resistance.

CAUTION:
TCM cannot be checked by itself, it is strictly prohibited to connect voltmeter or ohmmeter to TCM with coupler disconnected from it.

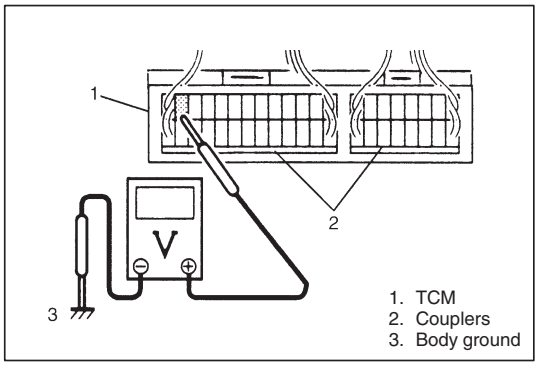

Voltage Check

1) Remove TCM from vehicle referring to TRANSMISSION CONTROL MODULE REMOVAL.
2) Connect TCM couplers to TCM.
3) Check voltage at each terminal of couplers connected.

NOTE:
As each terminal voltage is affected by the battery voltage, confirm that it is 11 V or more when ignition switch is ON.

Terminal arrangement of TCM coupler (Viewed from harness side)

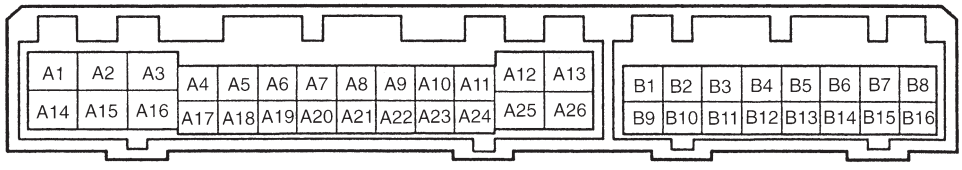

TERMI-NAL	CIRCUIT	STANDARD VOLTAGE	CONDITION
A1	Shift solenoid No.5 (Dropping resister)	approx. 0 V	IG switch ON, select lever at “P” range
A2	Shift solenoid No.4 (Dropping resister)	10 – 14 V	IG switch ON, select lever at “P” range
A3	Shift solenoid No.3 (Dropping resister)	approx. 0 V	IG switch ON, select lever at “P” range
A4	Shift solenoid No.1	approx. 0 V	IG switch ON, select lever at “P” range
A5	Not used	–	–
A6	D-range idle up signal	10 – 14 V	Select lever at “P” or “N” range
		0 – 1 V	Select lever at other than “P” or “N” range
A7	Not used	–	–
A8	Not used	–	–
A9	A/C compressor magnet switch	approx. 0 V	A/C OFF
		10 – 14 V	A/C ON
A10	Stop lamp switch	10 – 14 V	Stop lamp ON (Brake pedal depressed)
		approx. 0 V	Stop lamp OFF (Brake pedal not depressed)
A11	A/T fluid temperature sensor	0 – 4.5 V	IG ON
A12	IG power source	10 – 14 V	IG switch ON
A13	Not used	–	–
A14	Shift solenoid No.5	approx. 0 V	IG switch ON, select lever at “P” range
A15	Shift solenoid No.4	2.4 – 5.0 V	IG switch ON, select lever at “P” range
A16	Shift solenoid No.3	approx. 0 V	IG switch ON, select lever at “P” range
A17	Shift solenoid No.2	approx. 0 V	IG switch ON, select lever at “P” range
A18	Lock-up solenoid	approx. 0 V	IG switch ON, select lever at “P” range
A19	O/D OFF lamp	10 – 14 V	IG switch ON, O/D cut switch OFF (“O/D OFF” not-illuminated)
		approx. 0 V	IG switch ON, O/D cut switch ON (“O/D OFF” illuminated)
A20	A/T failure signal	–	–
A21	Not used	–	–
A22	ECT and MAP sensor signal	–	IG ON
A23	O/D cut switch	10 – 14 V	IG switch ON, O/D cut switch OFF (“O/D OFF” not-illuminated)
		approx. 0 V	IG switch ON, O/D cut switch ON (“O/D OFF” illuminated)
A24	Sensor ground	–	–
A25	Ground	–	–
A26	Not used	–	–
B1	Throttle opening signal	–	IG switch ON. The voltage should decrease as the throttle pedal depressed.
B2	Input revolution sensor (+)	–	–
B3	Vehicle speed sensor (+)	–	–
B4	Engine revolution signal	–	–
B5	Diagnosis switch	–	–
B6	Transmission range “N” switch	10 – 14 V	IG switch ON, select lever at “N” range
		approx. 0 V	IG switch ON, select lever at other than “N” range
B7	Transmission range “R” switch	10 – 14 V	IG switch ON, select lever at “R” range
		approx. 0 V	IG switch ON, select lever at other than “R” range
B8	Transmission range “P” switch	10 – 14 V	IG switch ON, select lever at “P” range
		approx. 0 V	IG switch ON, select lever at other than “P” range
B9	Not used	–	–
B10	Input revolution sensor (–)	–	–
B11	Vehicle speed sensor (–)	–	–
B12	Vehicle speed sensor shield	–	–
B13	Serial communication (SUZUKI scan tool)	10 – 14 V	When SUZUKI scan tool not used.
B14	Transmission range “L” switch	10 – 14 V	IG switch ON, select lever at “L” range
		approx. 0 V	IG switch ON, select lever at other than “L” range
B15	Transmission range “2” switch	10 – 14 V	IG switch ON, select lever at “2” range
		approx. 0 V	IG switch ON, select lever at other than “2” range
B16	Transmission range “D” switch	10 – 14 V	IG switch ON, select lever at “D” range
		approx. 0 V	IG switch ON, select lever at other than “D” range

ON-VEHICLE SERVICE

MAINTENANCE SERVICE

FLUID LEVEL

LEVEL CHECK AT NORMAL OPERATING TEMPERATURE

1) Stop vehicle and place it level.
2) Apply parking brake and place chocks against wheels.
3) With selector at P position, start engine.
4) Warm up engine till fluid temperature reaches normal operating temperature (70 – 80°C/158 – 176°F). As a guide to check fluid temperature, warm up engine to normal operating temperature.

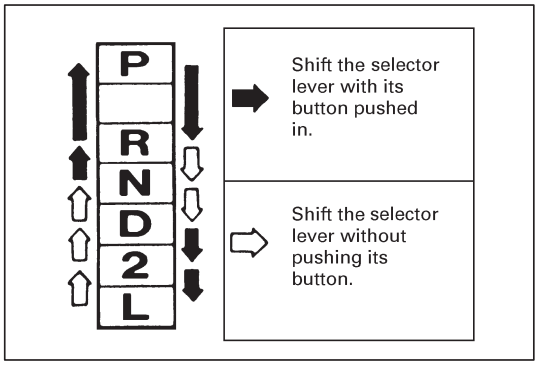

5) Keep engine idling and shift selector slowly to L and back to P position.
6) With engine idling, pull out dipstick, wipe it off with a clean cloth and put it back into place.

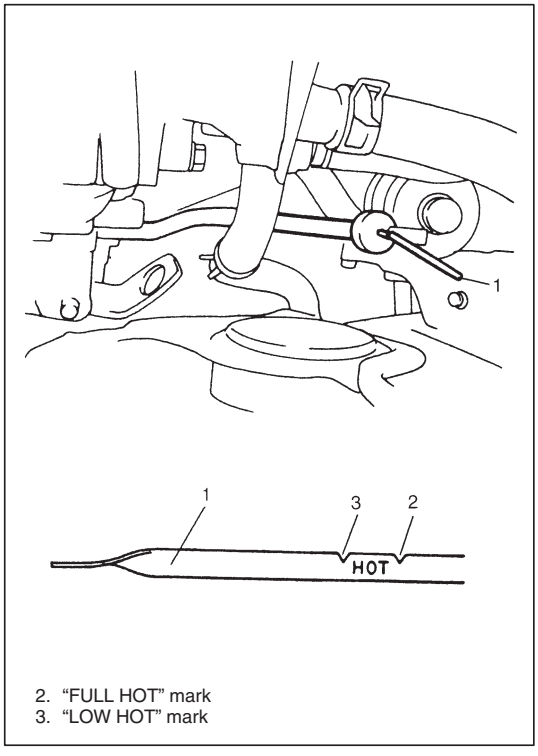

2. "FULL HOT" mark
3. "LOW HOT" mark

7) Pull out dipstick (1) again and check fluid level indicated on it. Fluid level should be between FULL HOT and LOW HOT. If it is below LOW HOT, add an equivalent of DEXRON®-III up to FULL HOT.

Fluid specification
An equivalent of DEXRON®-III

NOTE:

- **DO NOT RACE ENGINE while checking fluid level, even after the engine start.**
- **DO NOT OVERFILL. Overfilling can cause foaming and loss of fluid through breather. Then slippage and transmission failure can result.**
- **Bringing the level from LOW HOT to FULL HOT requires 0.35 liters (0.74/0.62 US/Imp. pt).**
- **If vehicle was driven under high load such as pulling a trailer, fluid level should be checked about half an hour after it is stopped.**

FLUID CHANGE INTERVALS

If the vehicle is usually driven under one or more of the following severe conditions, change the transmission fluid every 160,000 km (100,000 miles).

- In heavy city traffic. Where the outside temperature regularly reaches 32°C (90°F).
- In very hilly or mountainous areas.
- Commercial use, such as taxi, police vehicle or delivery service.

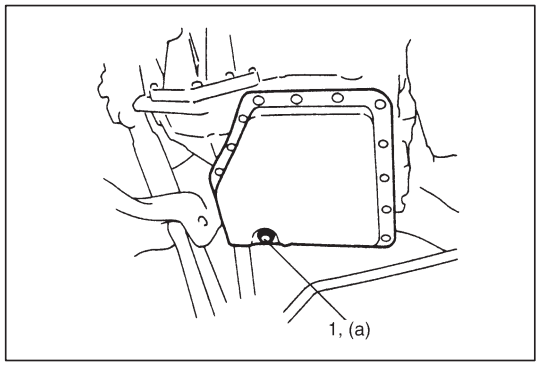

CHANGING FLUID

1) Lift up vehicle.
2) When engine has cooled down, remove drain plug (1) from oil pan and drain A/T fluid.
3) Install drain plug.

Tightening Torque
(a): 23 N·m (2.3 kg-m, 16.5 lb-ft)

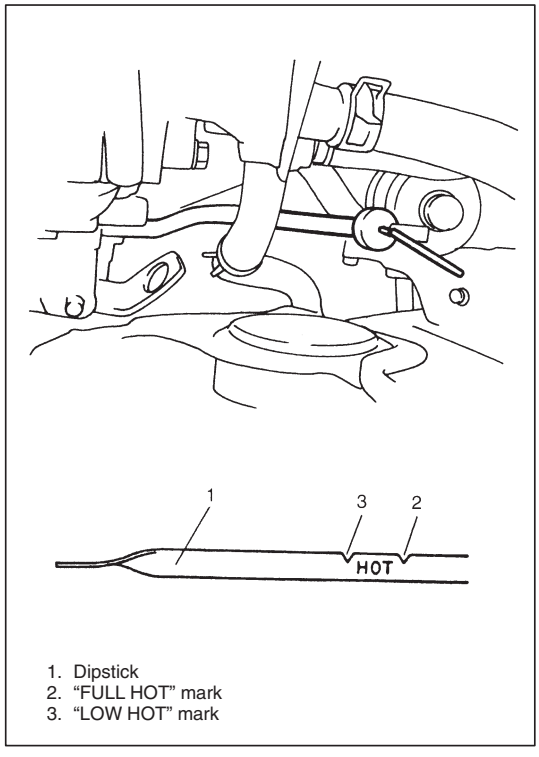

1. Dipstick
2. "FULL HOT" mark
3. "LOW HOT" mark

4) Lower vehicle and fill proper amount of an equivalent of DEXRON®-III.
5) Check fluid level according to procedure described under LEVEL CHECK AT NORMAL OPERATING TEMPERATURE.

Fluid specification
An equivalent of DEXRON®-III

Fluid capacity	
When draining from drain plug hole	4.3 liters (9.09/7.57 US/Imp. pt.)
When overhauling	5.1 liters (10.78/8.98 US/Imp. pt.)

SELECTOR LEVER

1. Selector lever ass'y
2. Selector lever knob ass'y
3. Screw
4. Selector indicator ass'y
5. Screw
6. Illumination lamp ass'y

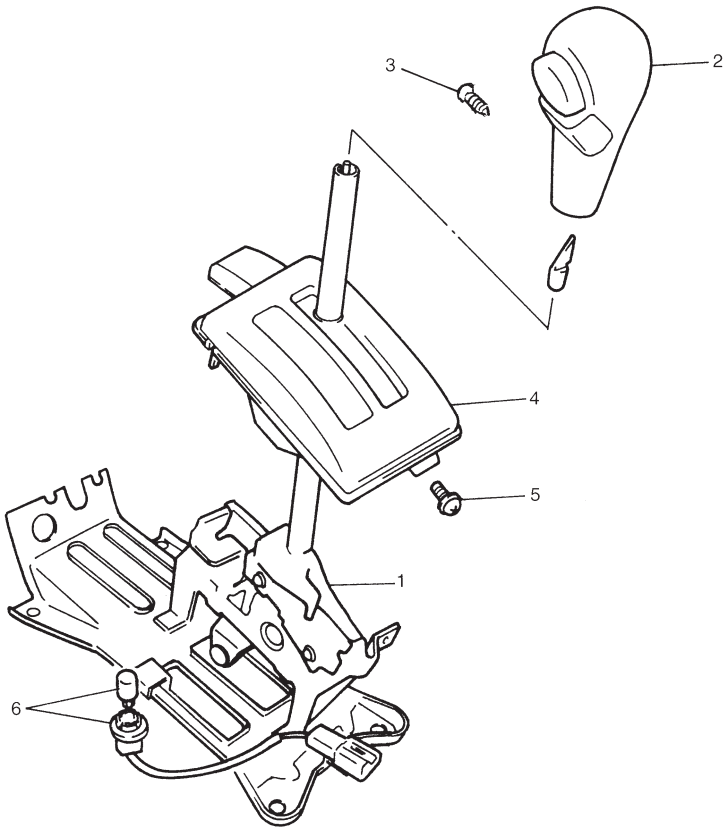

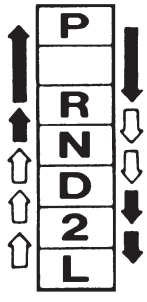

Shift the selector lever with its button pushed in.

Shift the selector lever without pushing its button.

INSPECTION

Check selector lever for smooth and clear cut movement and position indicator for correct indication.

For operation of selector lever, refer to the figure.

SHIFT SWITCH

REMOVAL

1) Block wheels and turn selector lever to “N” range.
2) Disconnect shift switch coupler and selector cable.
3) Remove shift switch from transmission case.

CAUTION:
Do not overhaul shift switch.

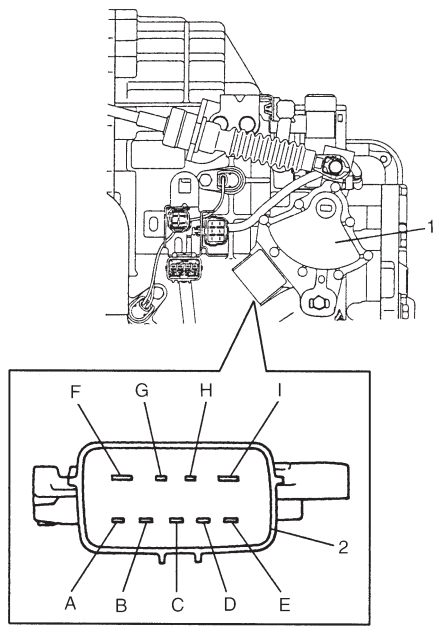

1. Shift switch

INSPECTION

1) Disconnect shift switch coupler (2).
2) Check that continuity exists at terminals shown below by moving selector lever.

Switch Position \ Terminal	B	A	H	C	E	D	G	I	F
P	○						○	○	○
R		○					○		
N			○				○	○	○
D				○			○		
2					○		○		
L						○	○		

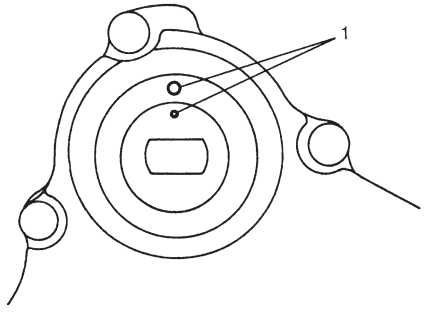

INSTALLATION

1) Using flat tip screwdriver, turn shift switch to have the match marks (1) line up (shift switch “N” range).

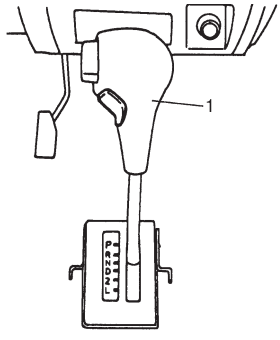

2) Turn selector lever (1) to “N” range (to have the automatic transmission to “N” range).

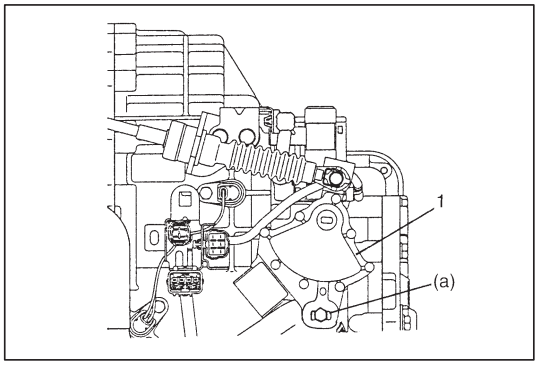

3) Install shift switch (1) to transmission case.

Tightening Torque
(a): 18 N·m (1.8 kg-m, 13.0 lb-ft)

4) Move selector lever in cabin to each range and check the continuity of each terminal of shift switch referring to INSPECTION.

5) Connect shift switch coupler.
6) Check that the engine can only be started in “N” and “P” range, but can not in “D”, “2”, “L” or “R” range. Also, check that backup lights come ON at “R” range.

SELECTOR CABLE

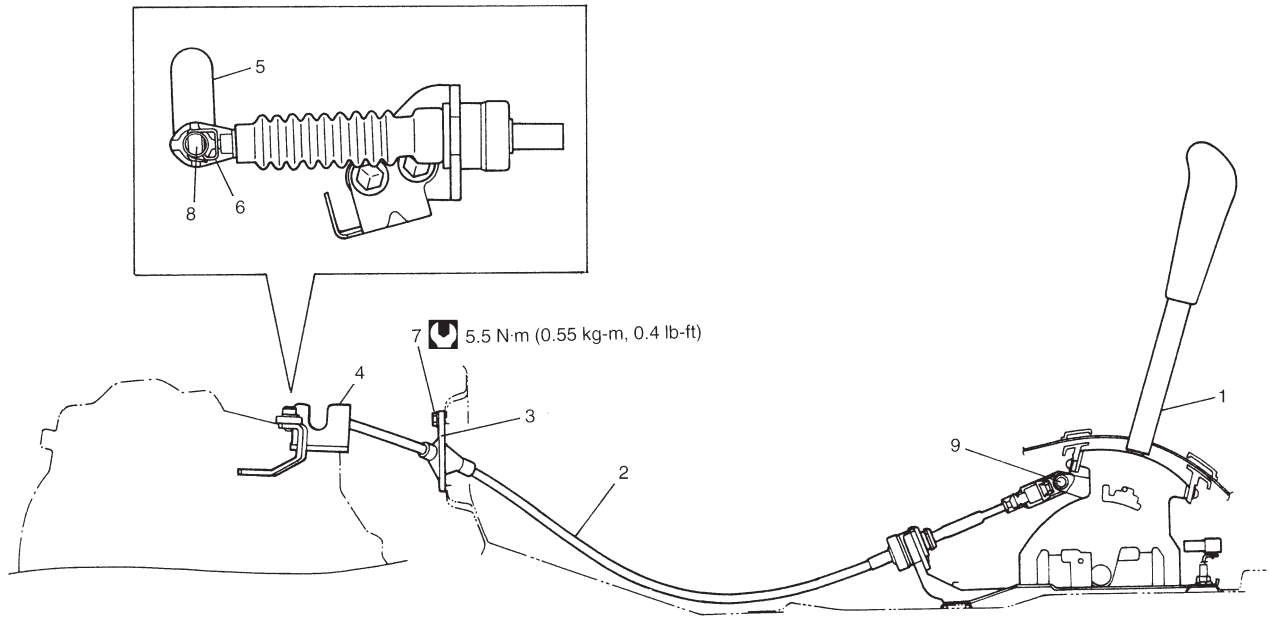

1. Selector lever ass'y
2. Selector cable
3. Selector housing
4. Cable bracket
5. Shift control lever
6. Clip
7. Selector housing bolt
8. Shift control lever pin: Apply lithium grease 99000-25010 to all around pin
9. Selector lever pin: Apply lithium grease 99000-25010 to all around pin

REMOVAL

1) Remove parking brake lever cover.
2) Remove console box.
3) Disconnect selector cable from selector lever and then detach from bracket.
4) Remove clip and disconnect selector cable from transmission.
5) Remove selector housing from dash panel.

INSTALLATION

Install selector cable by reversing removal procedure.
The important steps in installation are as follows.

- Apply grease to pin and cable joint.
- Tighten bolts and nut in upper figure to specified torque.
- Adjusting procedure is as follows.

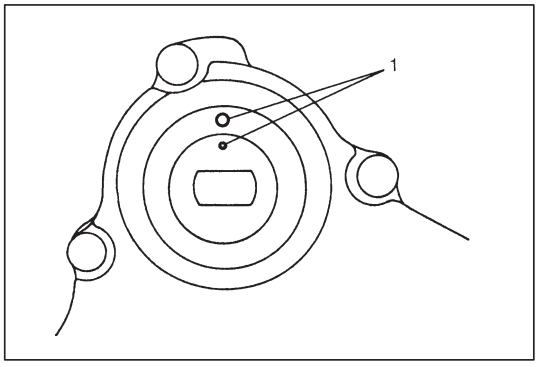

ADJUSTMENT

1) Turn shift switch to have the match marks (1) line up (shift switch "N" range).
2) Remove adjuster (cable end) from selector pin.

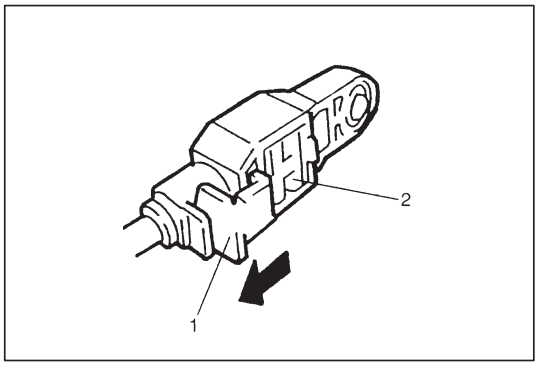

3) Release lock plate (1) which restrict moving of cable end holder (2).

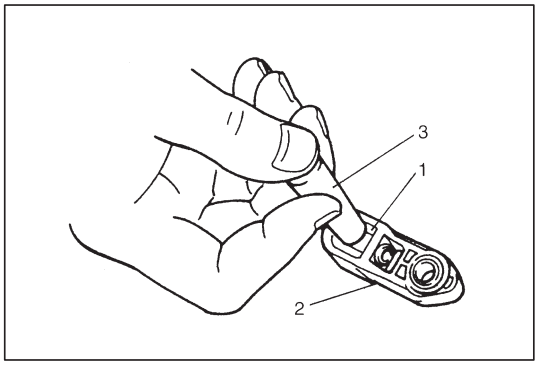

4) Push cable end holder (1) out from eye-end (2) using an appropriate tool (3) to disengage cable.
5) Shift selector lever to "N" position.
6) Apply grease to selector pin and install adjuster (cable end) to it.

   Grease: 99000-25010

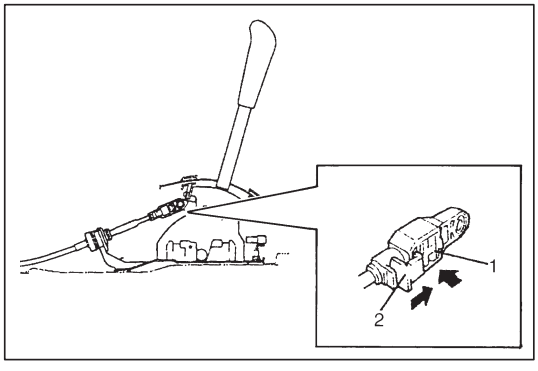

7) With both selector lever and shift switch kept each "N" position, drive cable end holder (1) in until it locks cable.
8) Slide lock plate (2) to secure cable end holder in position.
9) After selector rod was installed, check for the following.
   - Push vehicle with selector lever shifted to P range. Vehicle should not move.
   - Vehicle can not be driven in N range.
   - Vehicle can be driven in D, 2 and L ranges.
   - Vehicle can be backed in R range.

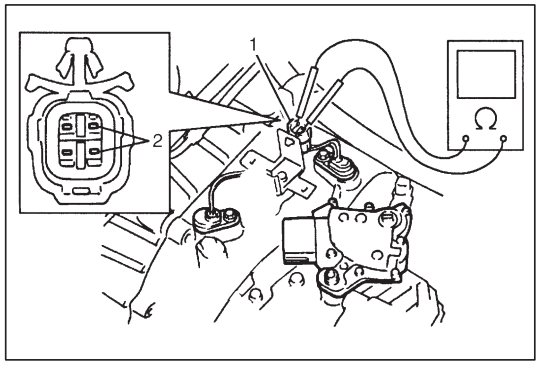

A/T VEHICLE SPEED SENSOR (A/T VSS)

INSPECTION

1) Disconnect negative cable at battery.
2) Disconnect A/T VSS – input rev. sensor coupler (1).
3) Check resistance between A/T VSS terminals(2).

A/T VSS standard resistance: 160 – 200 Ω at 20°C (68°F)

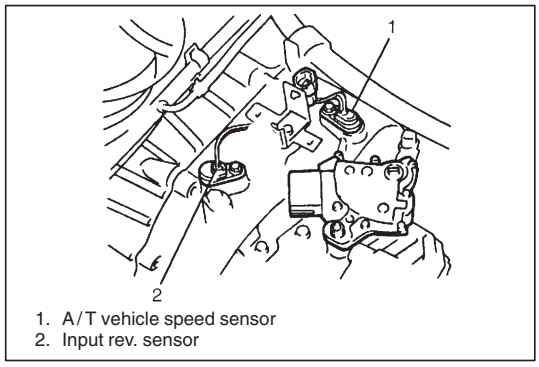

1. A/T vehicle speed sensor
2. Input rev. sensor

REMOVAL

1) Disconnect negative cable at battery.
2) Disconnect A/T VSS – input rev. sensor coupler.
3) Remove A/T VSS – input rev. sensor by removing its bolt.

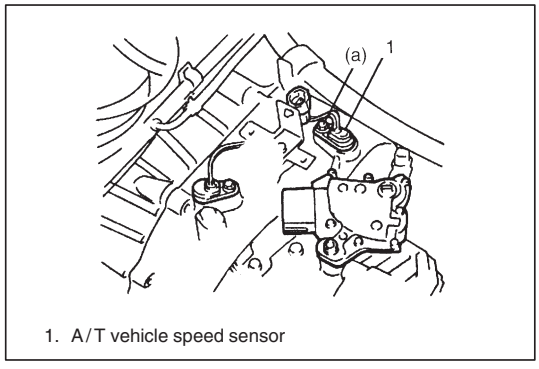

1. A/T vehicle speed sensor

INSTALLATION

1) Apply A/T fluid to A/T VSS O-ring.
2) Install A/T VSS to A/T case and tighten bolt to specified torque.

Tightening Torque
(a): 8 N·m (0.8 kg-m, 6.0 lb-ft)

3) Connect A/T VSS – input rev. sensor coupler.
4) Connect negative cable to battery.

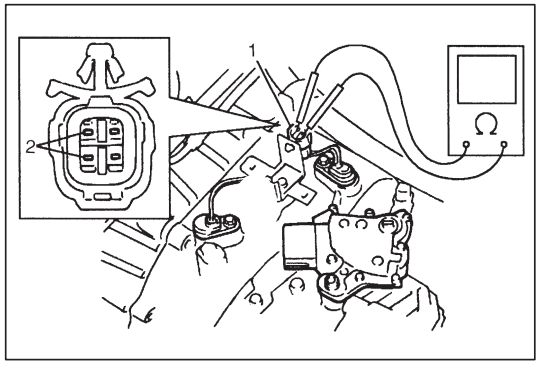

INPUT REV. SENSOR

INSPECTION

1) Disconnect negative cable at battery.
2) Disconnect A/T VSS – input rev. sensor coupler (1).
3) Check resistance between input revolution sensor terminals (2).

Input revolution sensor standard resistance:
160 – 200 Ω at 20°C (68°F)

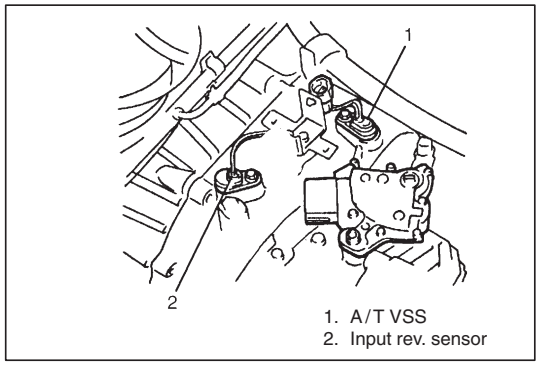

1. A/T VSS
2. Input rev. sensor

REMOVAL

1) Disconnect negative cable at battery.
2) Disconnect A/T VSS – input rev. sensor coupler.
3) Remove input rev. sensor by removing its bolt.

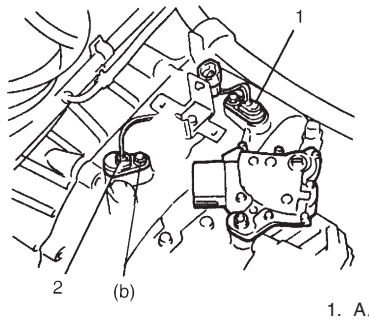

1. A/T VSS

INSTALLATION

1) Apply A/T fluid to input revolution sensor O-ring.
2) Install input revolution sensor (2) to A/T case and tighten bolt to specified torque.

   Tightening Torque
   (b): 8 N·m (0.8 kg-m, 6.0 lb-ft)

3) Connect A/T VSS – input rev. sensor coupler.
4) Connect negative cable to battery.

VEHICLE SPEED SENSOR (VSS, SPEEDOMETER DRIVEN GEAR)

Refer to SECTION 6E for removal, installation and inspection.

THROTTLE POSITION SENSOR

INSPECTION

Check throttle position sensor referring to SECTION 6E.

ENGINE COOLANT TEMP. (ECT) SENSOR

INSPECTION

Check engine coolant temp. sensor referring to SECTION 6E.

MANIFOLD ABSOLUTE PRESSURE (MAP) SENSOR

INSPECTION

Check MAP sensor referring to SECTION 6E.

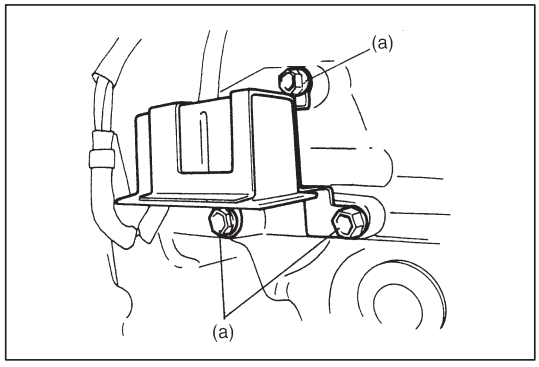

DROPPING RESISTER

REMOVAL/INSTALLATION

Refer to left figure for removal/installation.

Tightening Torque

(a): 20 N·m (2.0 kg-m, 14.5 lb-ft)

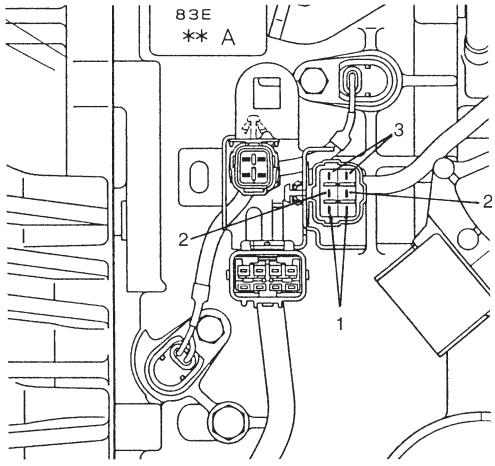

1. Resister terminal for shift solenoid No.3 Circuit
2. Resister terminal for shift solenoid No.4 Circuit
3. Resister terminal for shift solenoid No.5 Circuit

INSPECTION

Measure resistance between each resister terminals.

CIRCUIT	RESISTANCE
Shift solenoid No.3	7.5 Ω
Shift solenoid No.4	7.5 Ω
Shift solenoid No.5	7.5 Ω

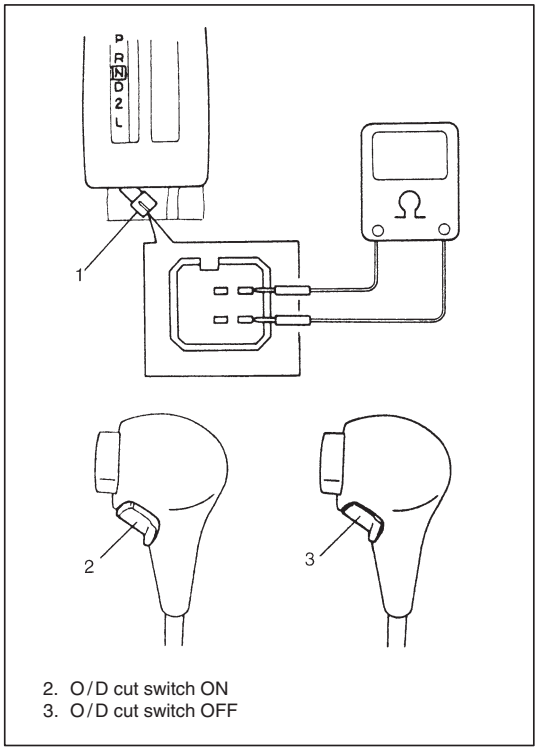

2. O/D cut switch ON
3. O/D cut switch OFF

O/D CUT SWITCH

INSPECTION

1) Remove console box.
2) Disconnect O/D cut switch coupler (1).
3) Check continuity between O/D cut switch terminals.

O/D cut switch	ON	OFF
Continuity	Continuity	No continuity

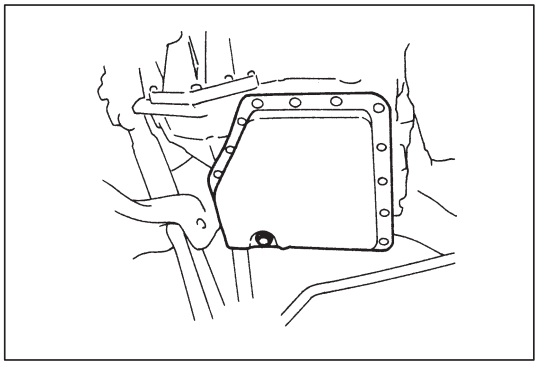

SHIFT SOLENOID VALVES AND A/T FLUID TEMP. SENSOR

REMOVAL

1) Disconnect negative cable at battery.
2) Drain A/T fluid.
3) Remove A/T oil pan.
4) Disconnect A/T fluid temp. sensor coupler.

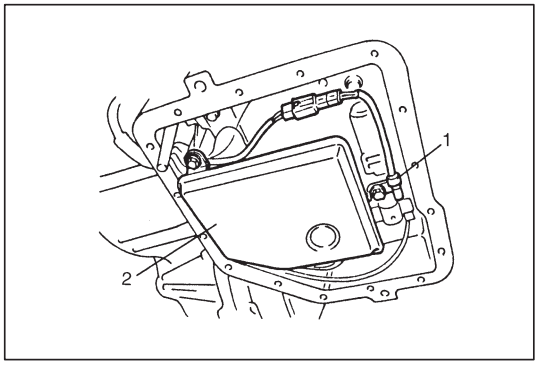

5) Remove A/T oil strainer (2) and A/T fluid temperature sensor (1).

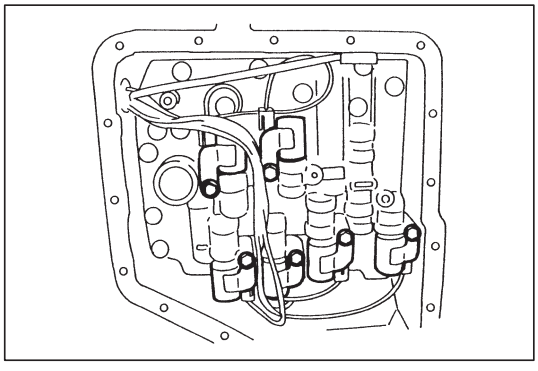

6) Disconnect shift solenoid couplers.
7) Remove shift solenoid valves.

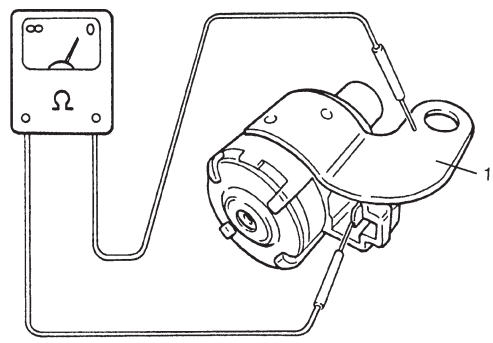

1. Solenoid valve

SHIFT SOLENOID VALVES

INSPECTION

Resistance Check

- Shift solenoid No.1, No.2 and lock-up solenoid
  Check resistance between terminal and solenoid body.

  Standard resistance: 11.5 – 12.5 Ω

- Shift solenoid No.3, No.4 or No.5

  Standard resistance: 2.5 – 3.5 Ω

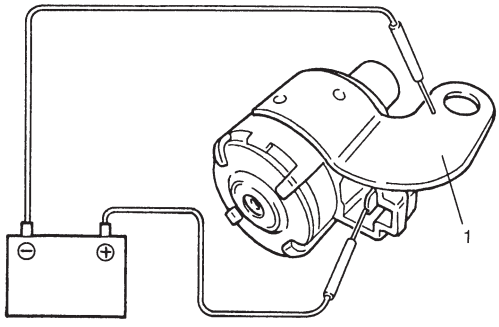

1. Solenoid valve

Operation check

When solenoids is connected to the battery as shown in figure, check that the solenoid actuates with a click sound.

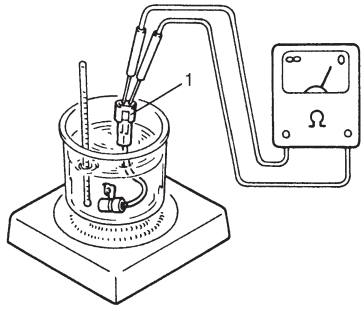

1. A/T fluid temperature sensor coupler

A/T FLUID TEMP. SENSOR

INSPECTION

Warm up A/T fluid temp. sensor. Thus make sure its resistance decrease with the increase of temperature.

Temperature	Resistance
20°C (68°F)	2.5 kΩ
40°C (104°F)	1.2 kΩ
60°C (140°F)	0.6 kΩ

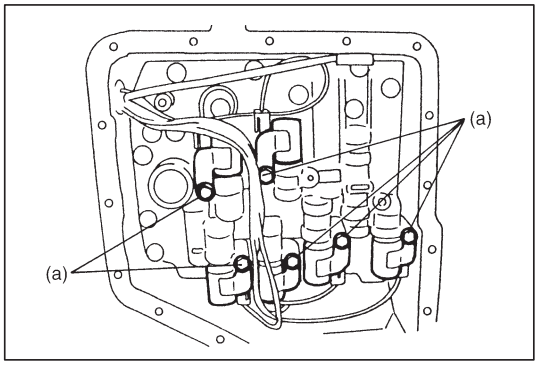

INSTALLATION

1) Install shift solenoid No.1, No.2, No.3 and No.4.

   Tightening Torque
   (a): 8 N·m (0.8 kg-m, 6.0 lb-ft)

2) Connect shift solenoid couplers.

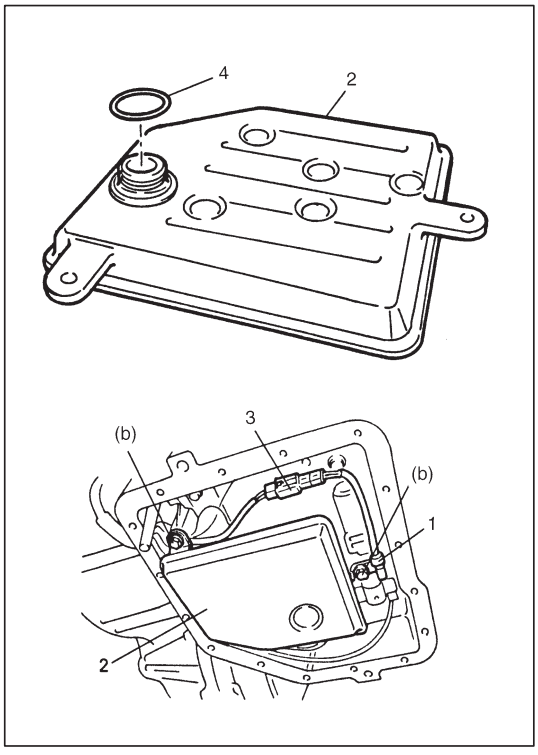

3) Install oil strainer (2) and A/T fluid temperature sensor (1).

   Tightening Torque
   (b): 10 N·m (1.0 kg-m, 7.5 lb-ft)

   NOTE:
   Do not forget to install O-ring (4) to oil strainer first.

4) Connect A/T fluid temperature sensor coupler (3).

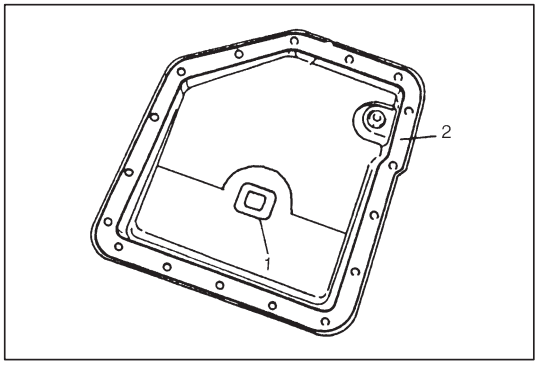

5) Clean mating surface of A/T oil pan (1) and A/T case.
6) Install new gasket (2) to A/T oil pan.

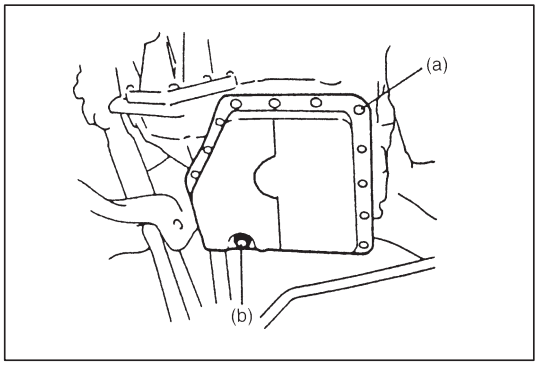

7) Install A/T oil pan.

   Tightening Torque
   (a): 7.5 N·m (0.75 kg-m, 5.5 lb-ft)

8) Install A/T oil pan drain bolt.

   Tightening Torque
   (b): 22.5 N·m (2.3 kg-m, 16.5 lb-ft)

9) Refill A/T fluid referring to p.7B-48.
10) Verify that there is no A/T fluid leakage.

DIFFERENTIAL SIDE OIL SEAL

REPLACEMENT

1) Lift up vehicle and drain transmission oil.
2) Remove drive shaft joints from differential gear of transmission. Refer to SECTION 4 (DRIVE SHAFT) for procedure to disconnect drive shaft joints.
   For differential side oil seal removal, it is not necessary to remove drive shafts from steering knuckle.

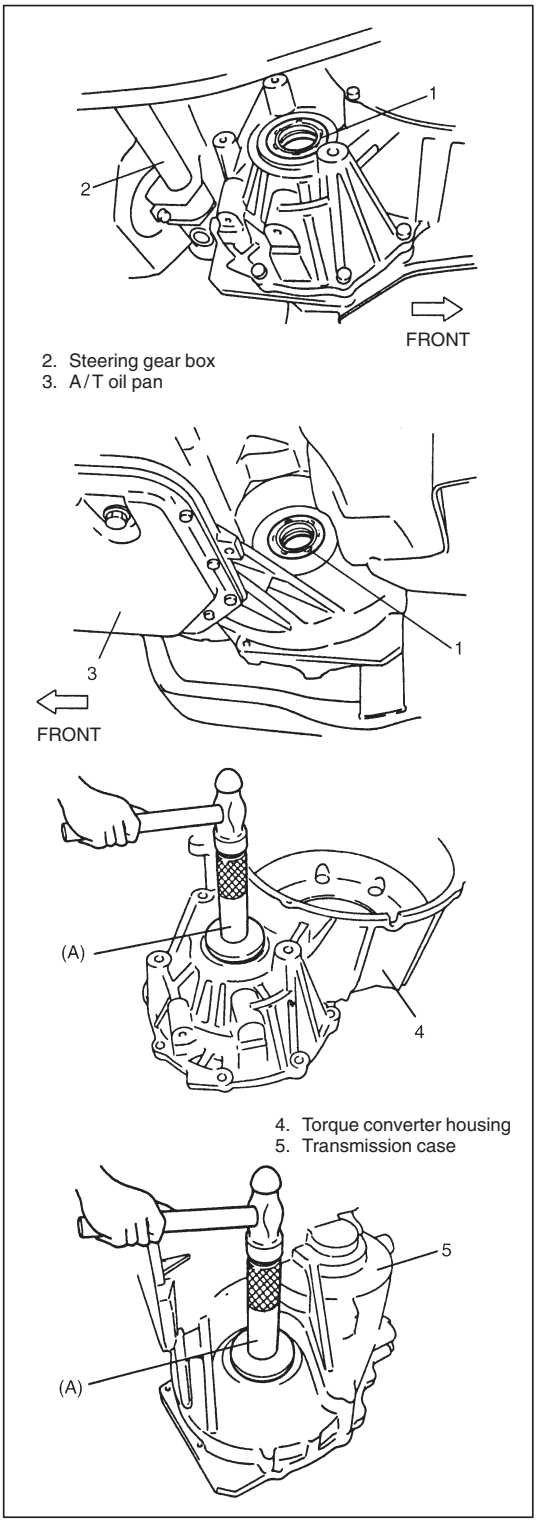

3) Remove differential side oil seal (1) by using flat end rod or like.
4) Install new differential side oil seal by using special tool.

   NOTE:
   For oil seal installation, press-fit oil seal so that transmission case end face is flush with oil seal end face.

   Special Tool
   (A): 09913-75510

5) Install drive shaft referring to SECTION 4.
6) Refill A/T fluid referring to CHANGING FLUID of MAINTENANCE SERVICE.

TRANSMISSION CONTROL MODULE (TCM)

CAUTION:
TCM and ECM consist of highly precise parts, so when handling it (or them), be careful not to expose to excessive shock.

REMOVAL

1) Disconnect negative cable at battery.
2) If the vehicle is equipped with air bag system, disable air bag system. Refer to “Disabling Air Bag System” in SECTION 10B.

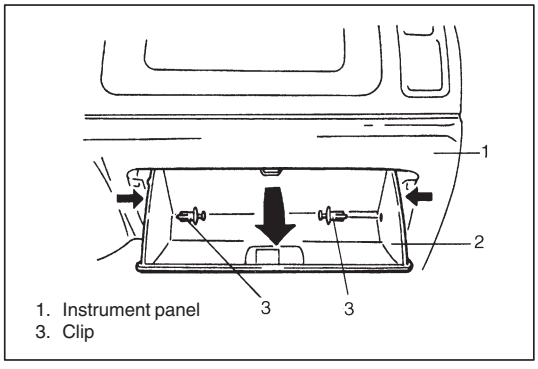

3) Remove glove box (2).

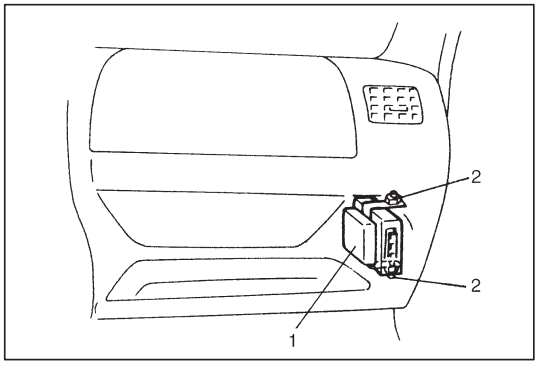

4) Disconnect couplers from TCM (1).
5) Loosen 2 nuts (2) and remove TCM (1) together with ECM from vehicle.

INSTALLATION

Reverse removal procedure noting the following.

- Connect ECM and TCM couplers securely.
- If the vehicle is equipped with air bag system, be sure to enable air bag system after TCM and ECM are back in place. Refer to “Enabling Air Bag System” in SECTION 10B.

TRANSMISSION UNIT REPAIR OVERHAUL

DISMOUNTING

1) Take down transmission with engine. For its procedure, refer to Section 6A1.

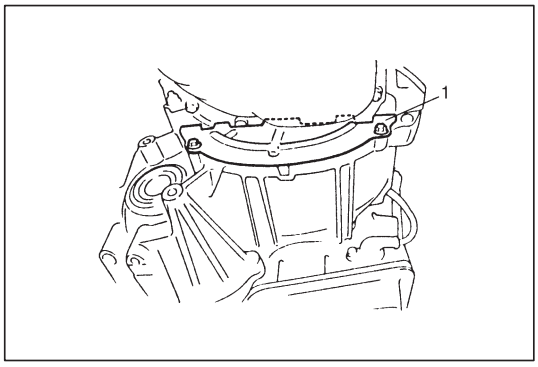

2) Remove torque converter housing lower plate (1).

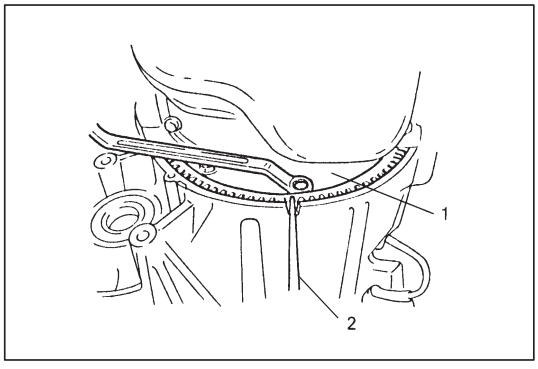

3) Remove drive plate bolts.
   To lock drive plate (1), engage a flat head rod or the like (2) with drive plate gear.

4) Remove starting motor.

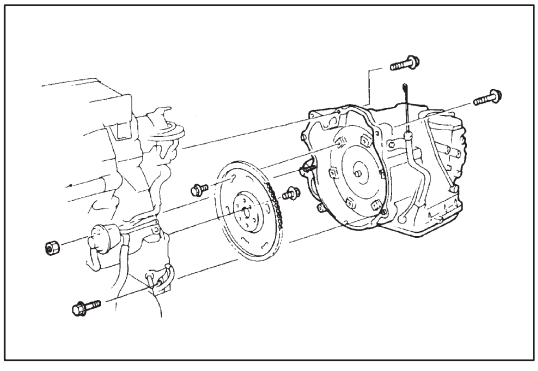

5) Remove bolts and nut fastening engine and transmission, then detach transmission from engine.

   NOTE:
   When detaching transmission from engine, move it in parallel with crankshaft and use care so as not to apply excessive force to drive plate and torque converter.

   WARNING:
   Be sure to keep transmission with torque converter horizontal or facing up throughout the work. Should it be tilted with torque converter down, converter may fall off and cause personal injury.

REMOUNTING

1) Make sure that torque converter is installed correctly to transmission.
   Refer to UNIT ASSEMBLY in this section.

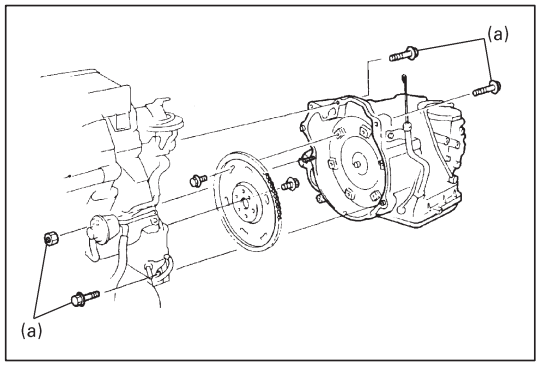

2) Attach transmission to engine.

   Tightening Torque
   (a): 50 N·m (5.0 kg-m, 36.0 lb-ft)

   WARNING:
   Be sure to keep transmission with torque converter horizontal or facing up throughout the work. Should it be tilted with torque converter down, converter may fall off and cause personal injury.

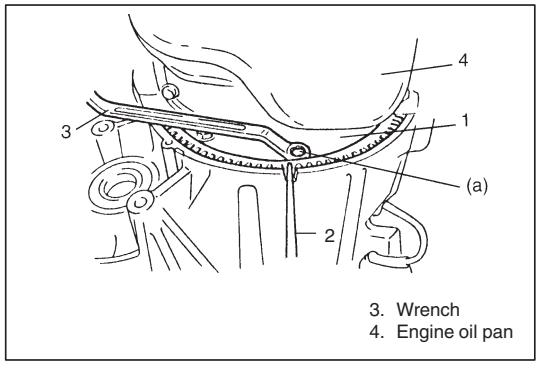

3) Tighten drive plate-torque converter bolts.
   Align drive plate bolt hole and torque converter through starter motor mounting opening then tighten bolts through torque converter housing lower plate opening.
   Lock drive plate (1) by engaging a flat head rod or the like (2) with drive plate gear.

   Tightening Torque
   (a): 20 N·m (2.0 kg-m, 14.5 lb-ft)

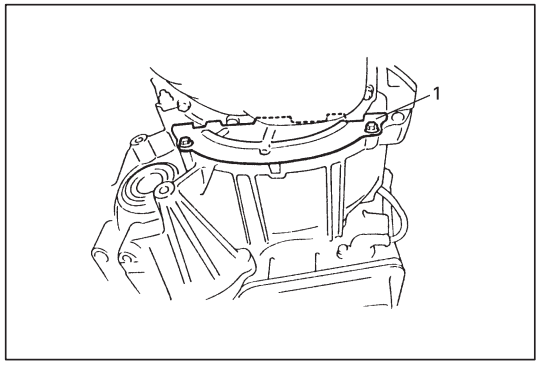

4) Install torque converter housing lower plate (1).

5) Install starting motor.

   Tightening Torque for Starter Bolts:
   23 N·m (2.3 kg-m, 16.5 lb-ft)

6) Remount engine with transmission assembly to vehicle. Refer to Section 6A1 for its procedure.

DISASSEMBLY

CAUTION:
- **Thoroughly clean transmission exterior before overhauling it.**
- **Keep working table, tools and hands clean while overhauling.**
- **Use special care to handle aluminum parts so as not to damage them.**
- **Do not expose removed parts to dust. Keep them always clean.**

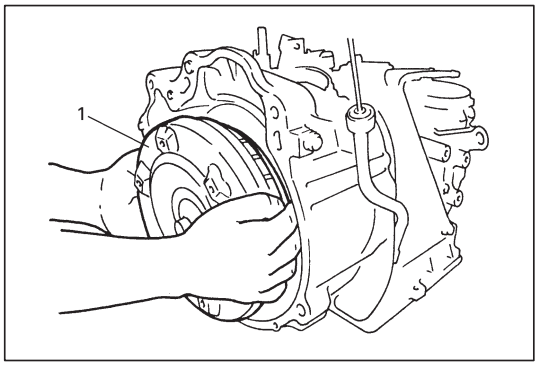

1) Remove torque converter (1).

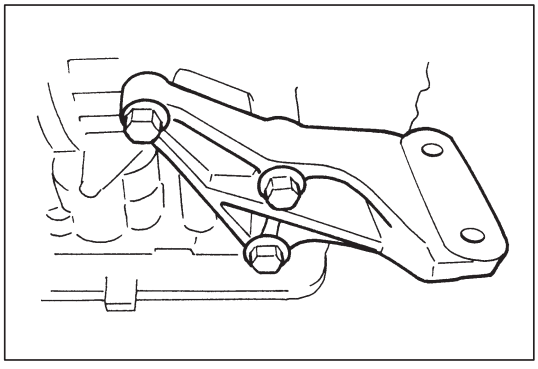

2) Remove engine mounting LH bracket.

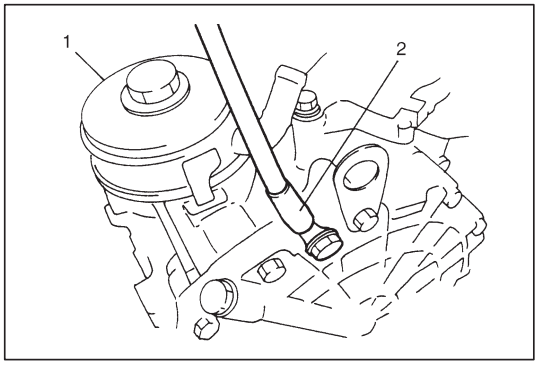

3) Remove oil cooler (1) and battery ground cable (2) (if still attached).

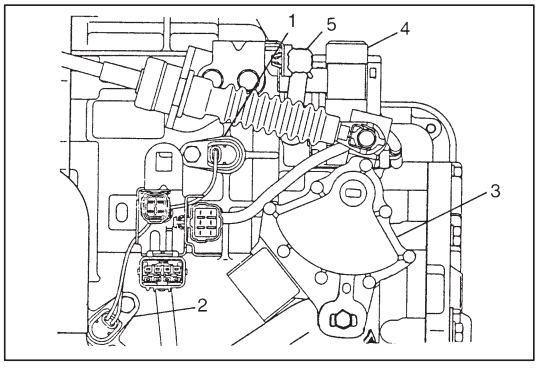

4) Remove A/T VSS (1) and input revolution sensor (2).
5) Remove shift switch (3).
6) Remove dropping resister (4).
7) Remove breather hose (5).

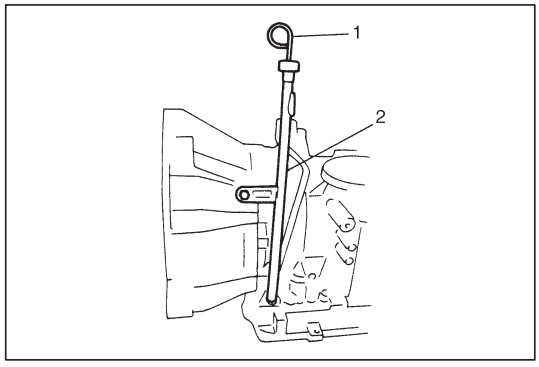

8) Remove A/T fluid level gauge (1) and filler tube (2).

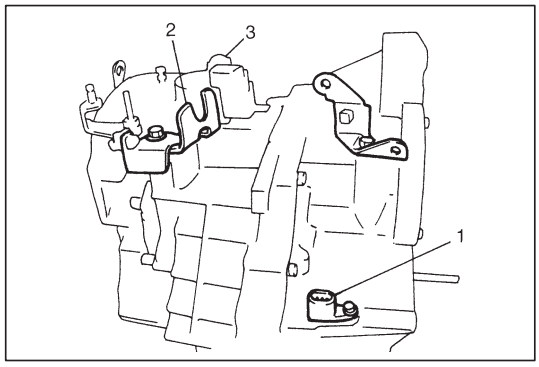

9) Remove vehicle speed sensor (1) (for speedometer), shift cable bracket (2) and connector clamp bracket (3).

10) Remove oil pan and oil pan gasket.

NOTE:

- **For removal of oil pan, do not turn transmission over as this will contaminate valve body with foreign materials in the bottom of oil pan.**
- **When removing oil pan, tap around it lightly with a plastic hammer. Do not force it off by using a screwdriver or the like.**

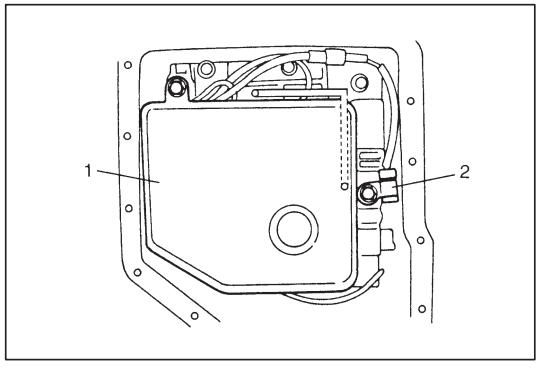

11) Remove oil strainer assembly (1), and detach A/T fluid temperature sensor (2).

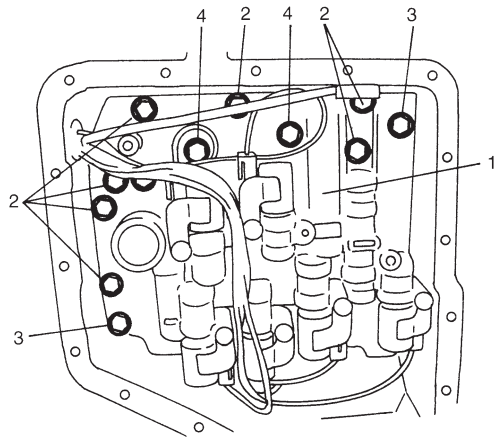

2. Bolt A
3. Bolt B
4. Bolt C

12) Disconnect couplers from solenoid valves, and A/T fluid temperature sensor.
Remove A/T fluid temperature sensor.
13) Remove valve body assembly (1).

CAUTION:
Be careful not to let manual valve fall off when removing valve body assembly.

NOTE:
There are three kinds of bolts (bolts A, B and C) fixing valve body ass'y.

14) Remove solenoid harness assembly.

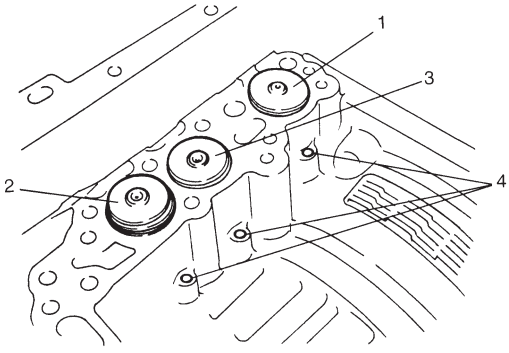

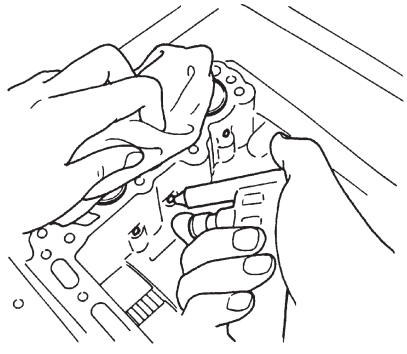

15) Remove accumulator pistons and springs.
To remove C0 (1), C2 (2) and B1 (3) accumulator pistons and springs, position a rag on pistons to catch each piston.
To remove pistons, force low-pressure compressed air (1 kg/cm^2, 15 psi, 100 kPa, max) into hole (4) as shown in figure, and pop each piston into the rag.
To remove B0 and C1 accumulator pistons and springs, remove each snap ring and accumulator spacer, then remove spring and piston.

NOTE:
Do not push accumulator pistons with fingers or anything before removing them. Pushing them may cause compressed fluid in accumulator to spew out of hole and get to your face and clothes.

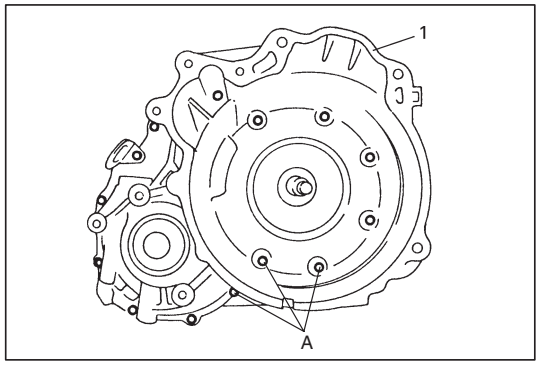

16) Remove torque converter housing (1).
   a) Remove housing internal bolts and external bolts.
   b) Remove housing while tapping around it lightly with a plastic hammer.

   NOTE:
   Never reuse bolts A shown in figure.

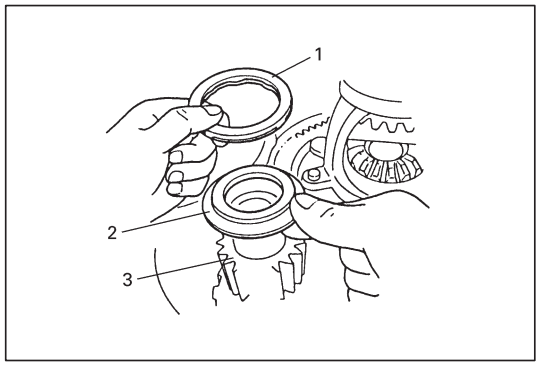

17) Remove thrust needle roller bearing (1) and thrust bearing race (2) from the top of counter driven gear ass'y (3).

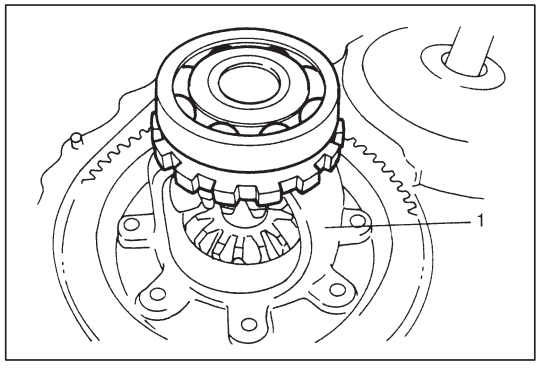

18) Remove differential gear assembly (1).

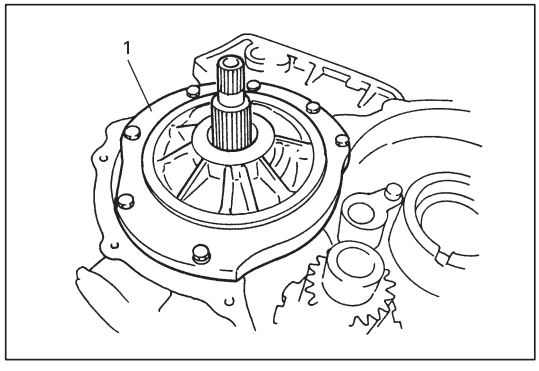

19) Remove oil pump (1).

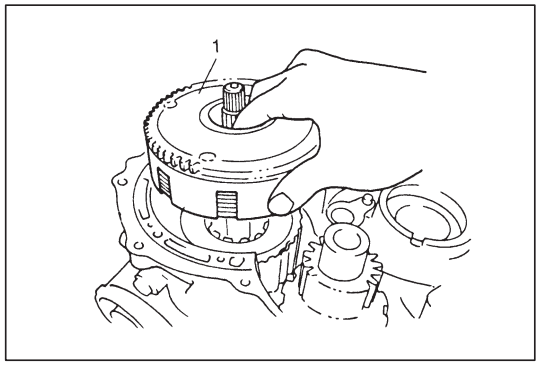

20) Remove front disc clutch assembly (1).

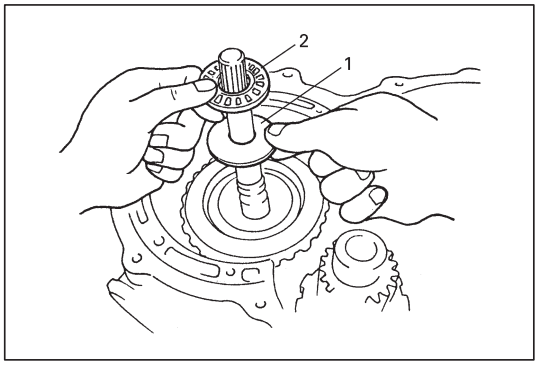

21) Remove thrust bearing race (1) and thrust needle roller bearing (2).

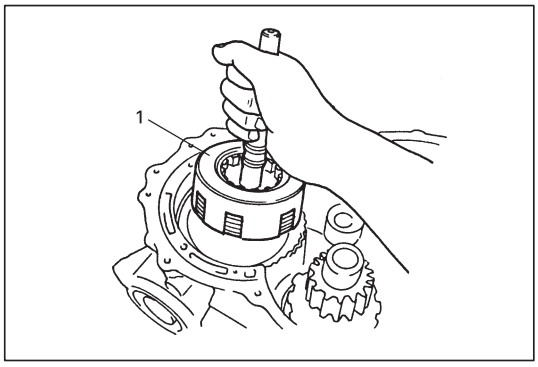

22) Remove rear disc clutch assembly (1).

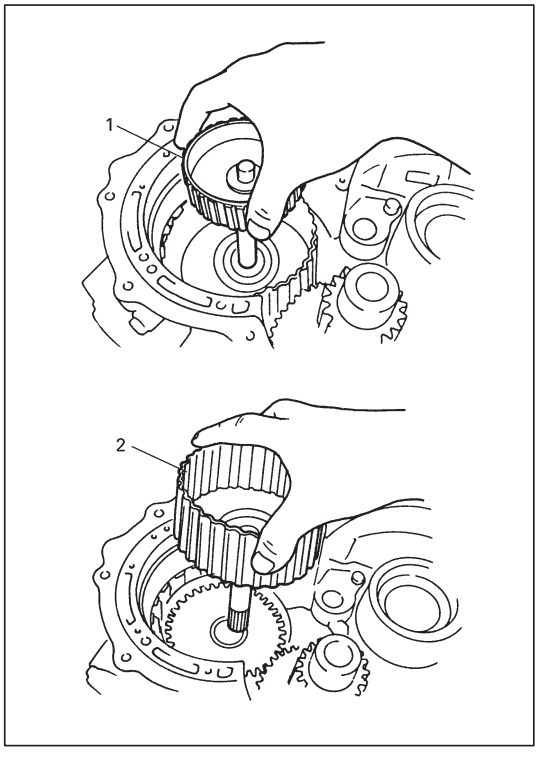

23) Remove intermediate shaft assembly (1) and follow shaft assembly (2).

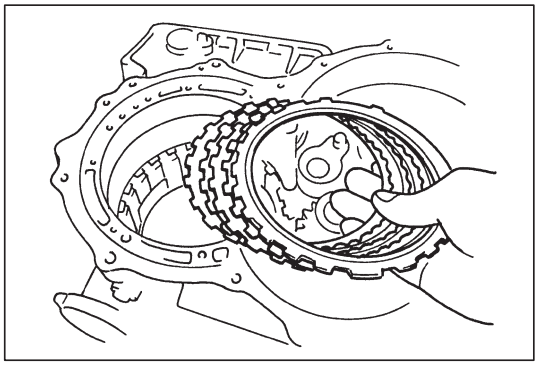

24) Remove B2 brake snap ring, brake flange, brake discs, brake plates and cushion plate.

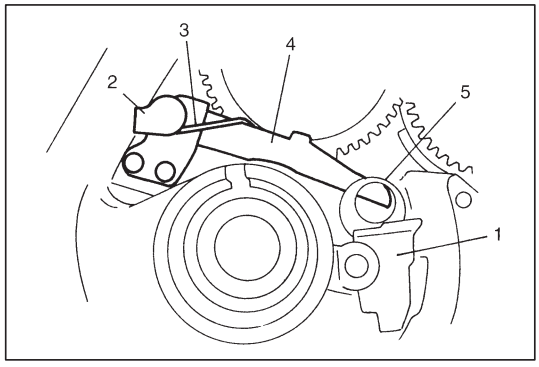

25) Remove oil guide plate (1) parking lock pawl cover (2), shaft, torsional spring (3) and parking lock pawl (4).
26) Remove parking lock pawl sleeve (5).

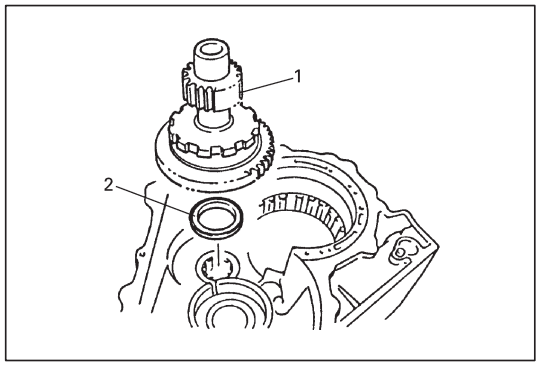

27) Remove counter driven gear assembly (1) and thrust needle roller bearing (2).

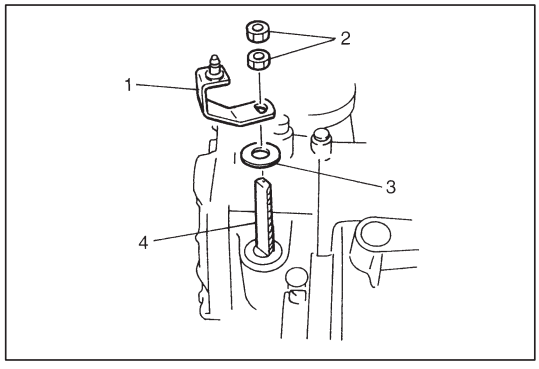

28) Remove control shift lever (1), nuts (2), washer (3) from manual shift shaft (4).

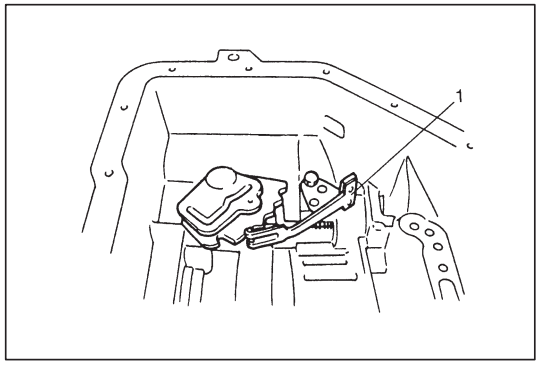

29) Remove detent spring (1).

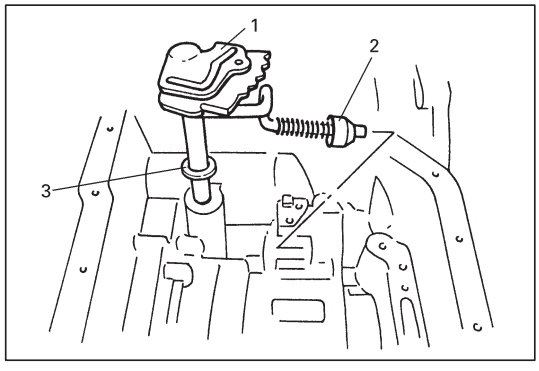

30) Remove manual shift shaft (1) with parking lock rod (2), and washer (3) from transmission case.

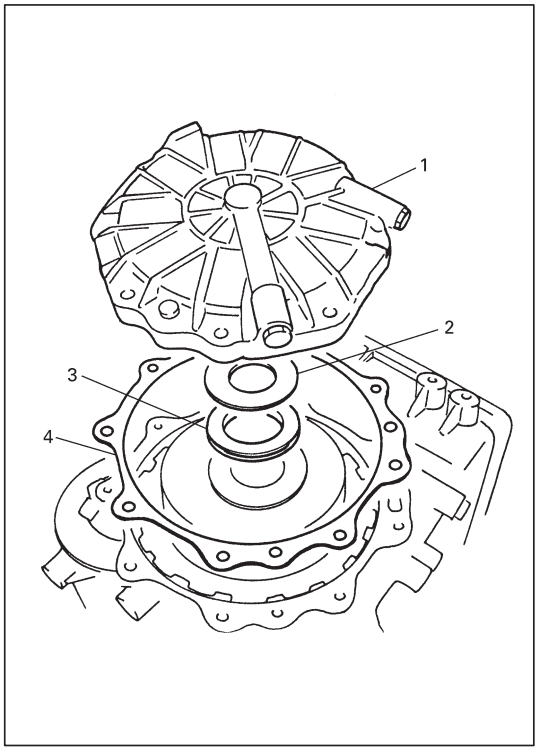

31) Remove rear cover assembly (1), thrust washer (2) and thrust needle roller bearing (3).
Remove gasket (4).

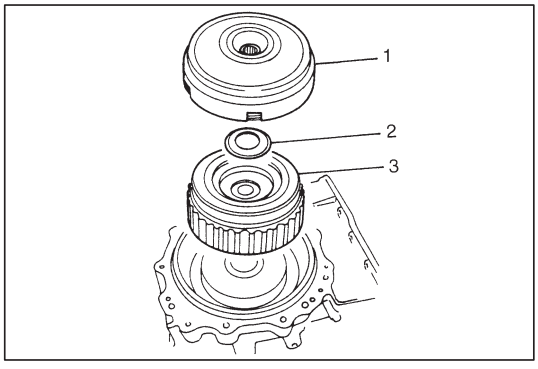

32) Remove C0 (direct clutch) assembly (1), thrust roller bearing (2) and rear planetary sun gear No.1 assembly (3).

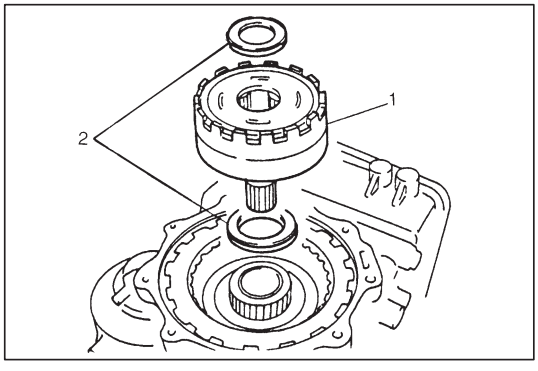

33) Remove planetary set (1) with bearing, thrust needle roller bearing (2).

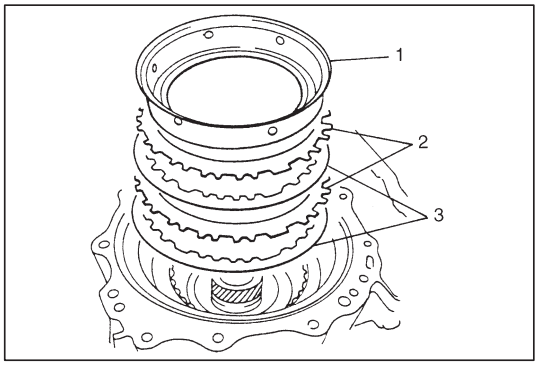

34) Remove O/D brake (B0 brake) piston adapter (1), B0 plates (2) and discs (3).

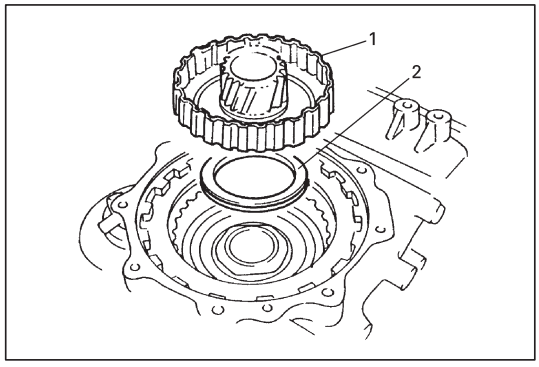

35) Remove planetary sun gear No.2 (1) and thrust needle roller bearing (2).

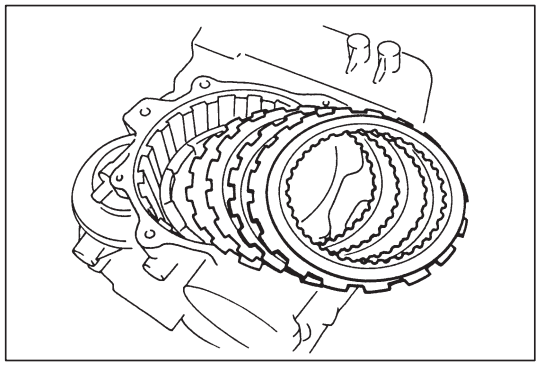

36) Remove snap ring, then remove brake flange and disc.
37) Remove snap ring, then remove brake discs and plates (B1 brake).

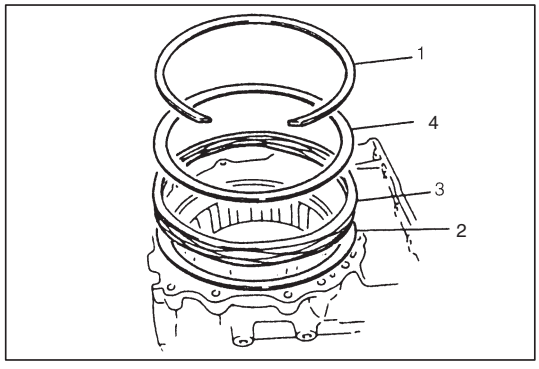

38) Remove snap ring (1), then O/D brake return spring seat (2), return spring (3) and spring retainer (4).

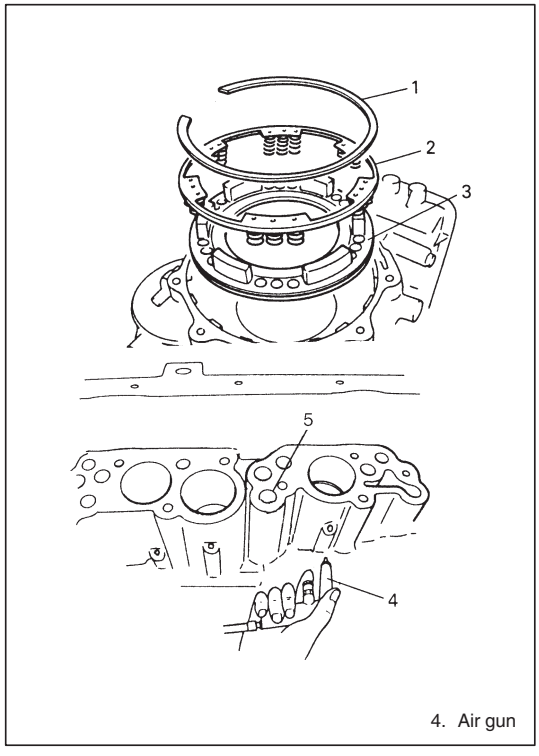

39) Remove snap ring (1) then remove 1st & 2nd brake piston return spring subassembly (2) and 1st & 2nd brake piston (3).
To remove 1st & 2nd brake piston, force low-pressure compressed air (1kg/cm^2, 15psi, 100kPa max) into hole (5) shown in figure and pop out 1st & 2nd brake piston into a rag.

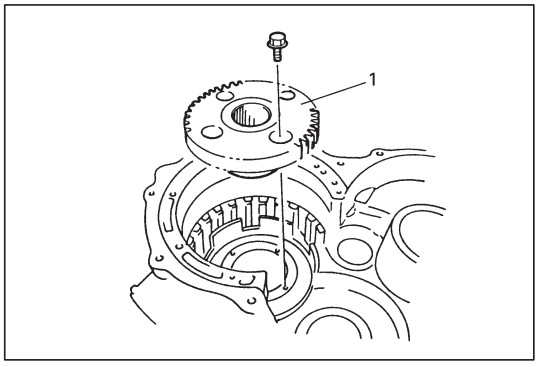

40) Remove counter drive gear (1).

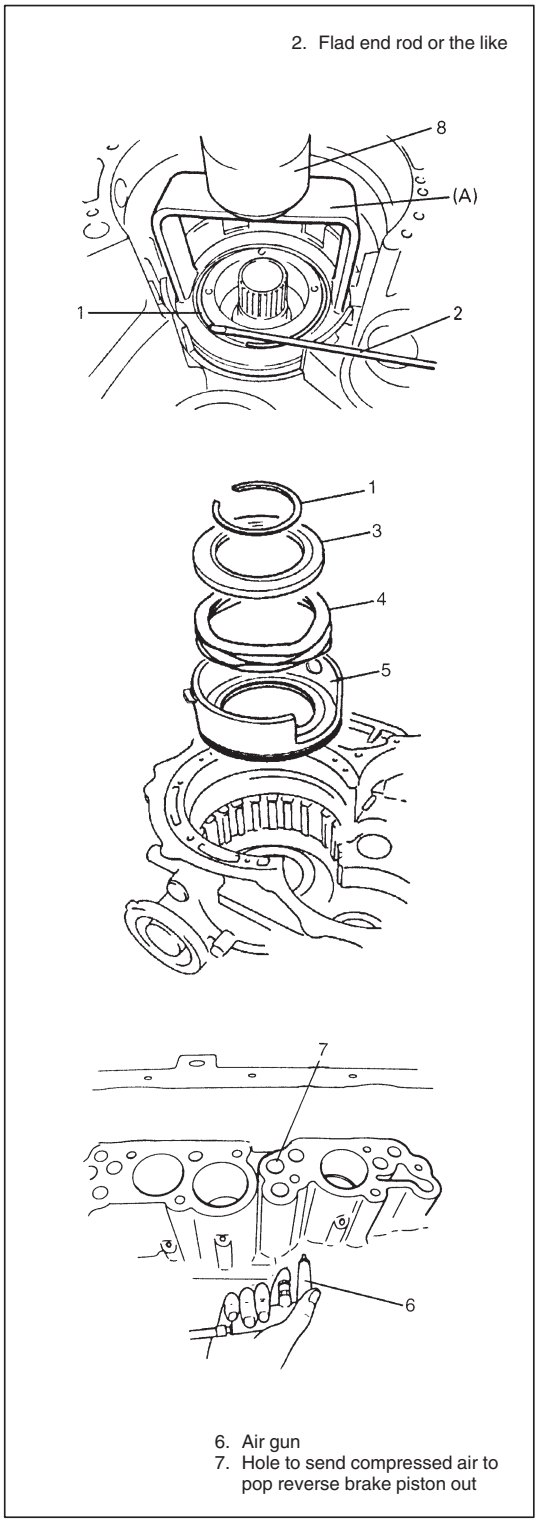

41) Use hydraulic press (8) and special tool to compress wave spring (4), then remove snap ring (1).

Special Tool:
(A): 09926-96040

NOTE:
- **Do not compress wave spring more than necessary.**
- **Do not reuse snap ring (1).**

42) Remove reverse brake piston seat (3), wave spring (4) and reverse brake piston (5).
To remove reverse brake piston, force low-pressure compress air (1kg/cm^2, 15psi, 100kPa max) into hole (7) shown in figure, and pop out piston into a rag.

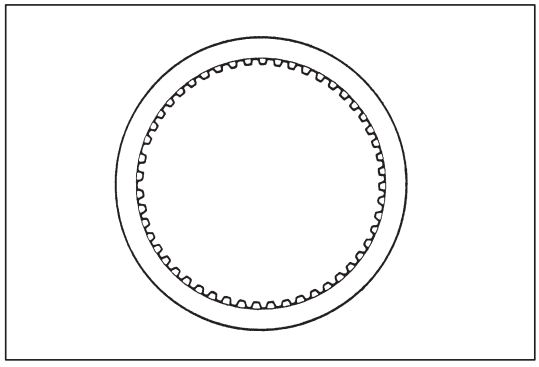

INSPECTION

Clutch and Brake Discs

Dry and inspect them for pitting, burn flaking, wear, glazing, cracking, charring and chips or metal particles imbedded in lining. If discs show any of the above conditions, replacement is required.

NOTE:

- **If disc lining is exfoliated or discolored, replace all discs.**
- **Before assembling new discs, soak them in A/T fluid for at least two hours.**

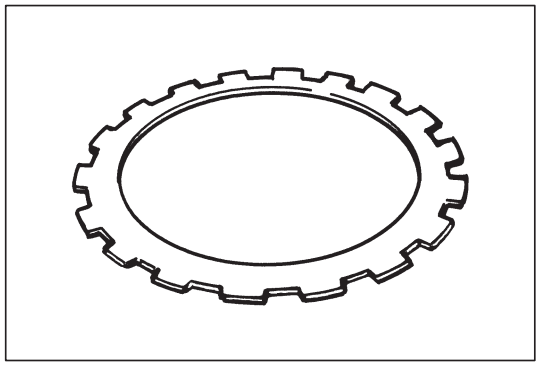

Clutch and Brake Plates and Flanges

Dry plates and check for discoloration. If plate surface is smooth and even color smear is indicated, the plate should be reused. If severe heat spot discoloration or surface scuffing is indicated, the plate must be replaced.

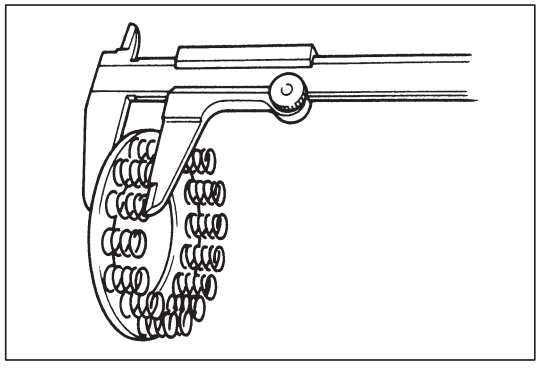

1st & 2nd Brake Piston Return Spring Subassembly

Measure height of 1st & 2nd brake piston return spring.

Specified value: 20.81 mm

NOTE:

- **Do not apply excessive force when measuring spring height.**
- **Perform measurement at several points.**

Evidence of extreme heat or burning in the area of clutch may have caused springs to take a heat set and would require their replacement.

DISASSEMBLY OF SUBASSEMBLY

CAUTION:
- **Keep component parts in group for each subassembly and avoid mixing them up.**
- **Clean all parts with cleaning solvent thoroughly and air dry them.**
- **Use kerosene or automatic transmission fluid as cleaning solvent.**
- **Do not use wiping cloths or rags to clean or dry parts.**
- **All oil passages should be blown out and checked to make sure that they are not obstructed.**
- **Keep face and eyes away from solvent spray while air blowing parts.**
- **Check mating surface for irregularities and remove them, if any, and clean it again.**
- **Soak new clutch discs and brake discs in transmission fluid for at least 2 hours before assembly.**
- **Replace all gaskets and O-rings with new ones.**
- **Apply automatic transmission fluid to all O-rings.**
- **When installing seal ring, be careful so that it is not expanded excessively, extruded or caught.**
- **Replace oil seals that are removed and apply grease to their lips.**
- **Before installing, be sure to apply automatic transmission fluid to sliding, rolling and thrusting surface of all component part. Also after installation, make sure to check each part for proper operation.**
- **Always use torque wrench when tightening bolts.**

OIL PUMP

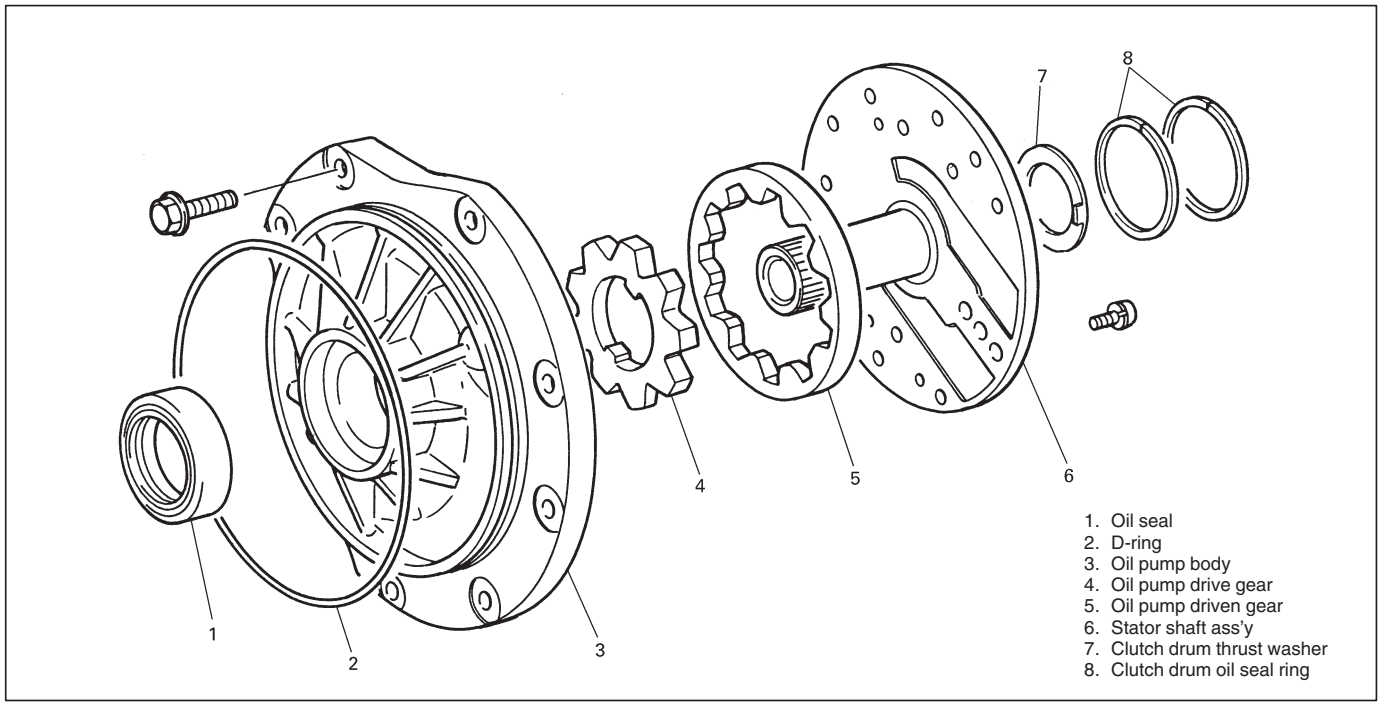

DISASSEMBLY

1) Remove D-ring from pump body.
2) Remove 2 oil seal rings and clutch drum thrust washer.
3) Remove 11 bolts.
4) Separate pump body from stator shaft ass'y.
5) Remove oil seal from pump body.

INSPECTION

1) Inspect pump body oil seal.
   Check for wear, damage or cracks.
   Replace oil seal if necessary and apply grease to its lip portion slightly when it is installed.

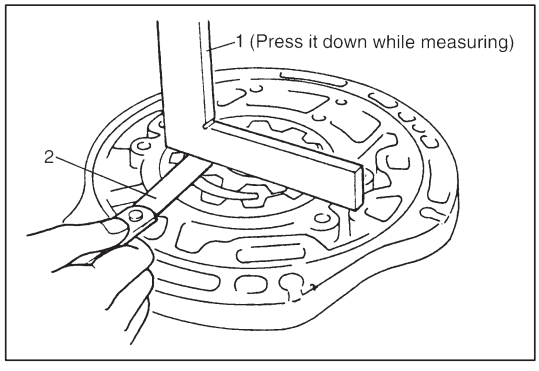

2) Check side clearance of both gears.
   Using a straightedge (1) and a feeler gauge (2), measure side clearance between gear and pump body.
   If clearance exceeds its standard value, replace oil pump ass'y.

   Side Clearance
   Standard: 0.02 – 0.04 mm (0.0008 – 0.0015 in.)

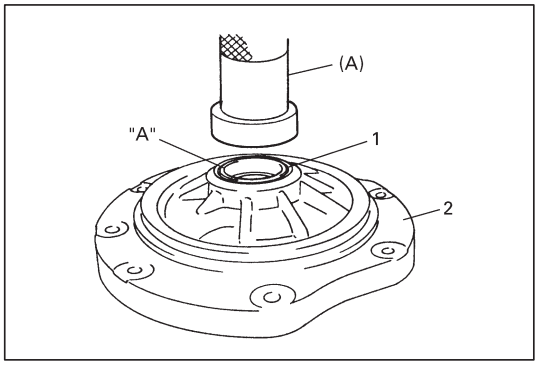

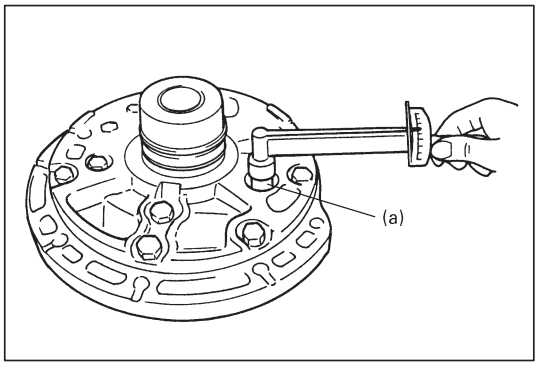

ASSEMBLY

1) Install pump body oil seal (1).
   Use special tool and hammer to install it, and then apply grease to its lip portion.

   Special Tool
   (A): 09913-85210

   "A": Grease 99000-25030

2) Install driven gear and drive gear to pump body (2) after applying A/T fluid to gears.

3) Install stator shaft ass'y to pump body and tighten 11 pump cover bolts to specification.

   Tightening Torque
   (a): 10 N·m (1.0 kg-m, 7.5 lb-ft)

4) Install 2 new oil seal rings to stator shaft.
5) Apply grease to 2 oil seal rings.
6) Install D-ring applied with grease and make sure that it is not twisted or extruded.
7) Check drive gear for smooth rotation.

FRONT CLUTCH (C2 CLUTCH)

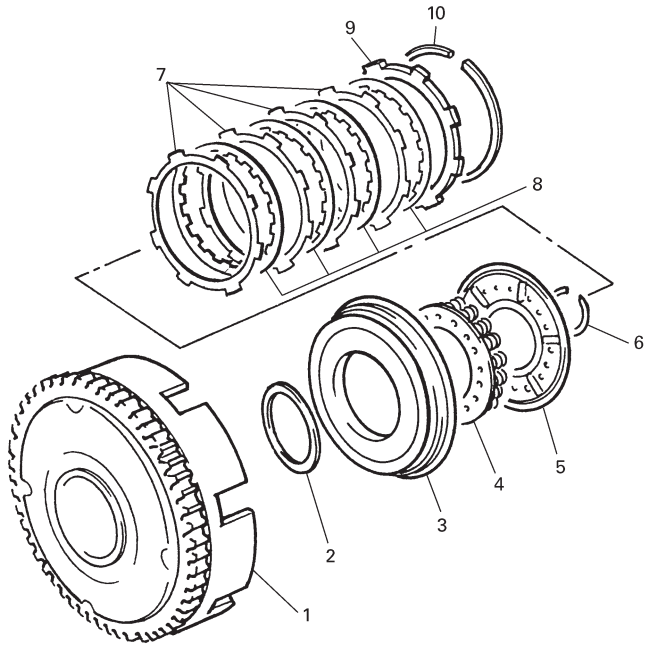

1. Front clutch No.1 drum
2. D-ring
3. Front clutch piston
4. Front clutch return spring seat
5. Front clutch balancer
6. Shaft snap ring
7. Clutch plate
8. Clutch disc
9. Clutch flange
10. Snap ring

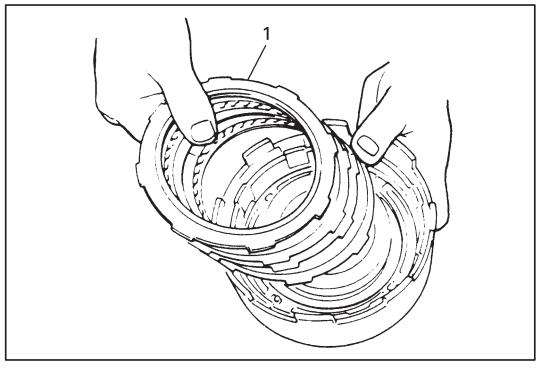

DISASSEMBLY

1) Remove snap ring.
2) Remove flange (1), discs and plates.

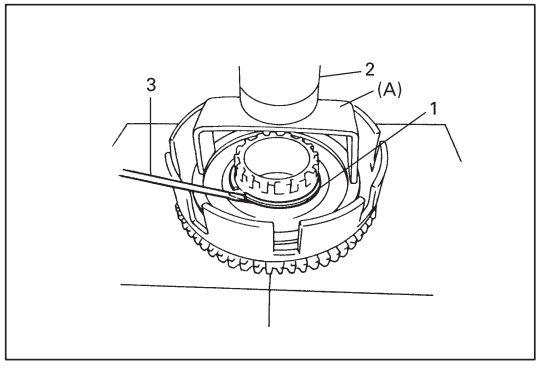

3) Remove shaft snap ring (1).
   Compress piston return springs and remove shaft snap ring. Place special tool (clutch spring compressor) on spring seat and compress spring with a press (2), and then remove shaft snap ring, using a flat end rod or the like (3).

CAUTION:
Do not push down return spring more than necessary.

Special Tool
(A): 09926-96010

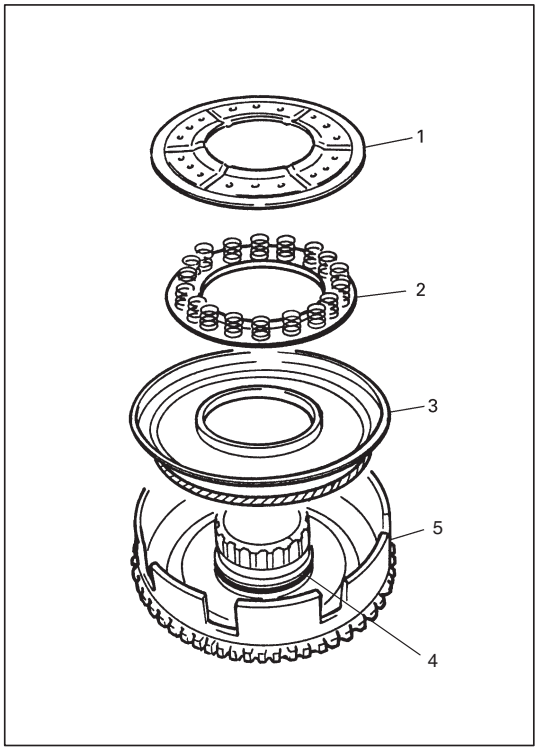

4) Remove front clutch balancer (1) and front clutch return spring seat (2).
5) Remove front clutch piston (3).
   Blow compressed air through input shaft oil hole to remove piston. If piston does not pop out, take it out with long nose pliers.
6) Remove D-ring (4) from front clutch No.1 drum (5).

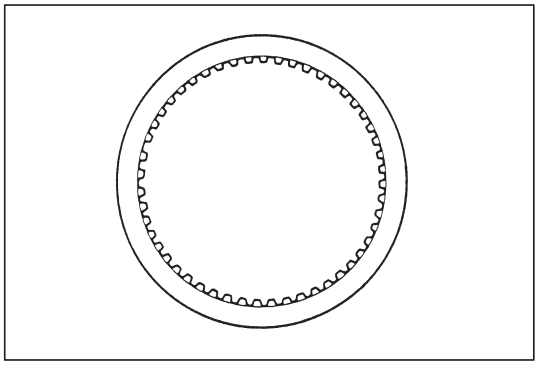

INSPECTION

Clutch Discs, Plates and Flange

Check that sliding surfaces of discs, plates and flanges are not worn or burnt. If necessary, replace.

NOTE:
- **If disc lining is exfoliated or discolored, replace all discs.**
- **Before assembling new discs, soak them in A/T fluid for at least two hours.**

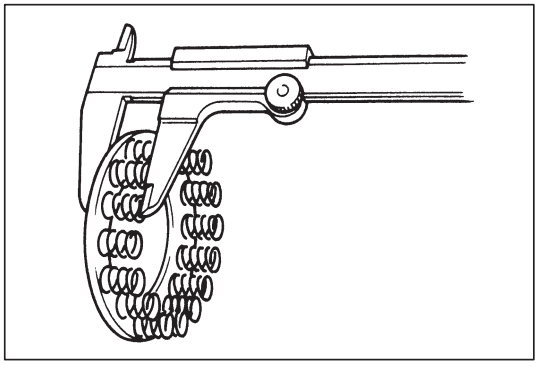

Front Clutch Return Spring Seat

Measure height of front clutch return spring.

Specified value: 13.85 mm (0.545 in.)

NOTE:
- **Do not apply excessive force when measuring spring height.**
- **Perform measurement at several points.**

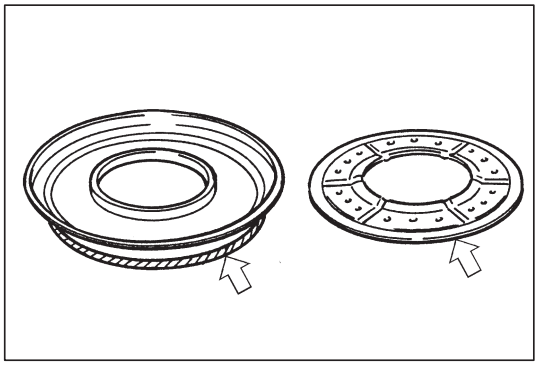

Front Clutch Piston Lip and Front Clutch Balancer Lip

Check each lip for wear, deformation, cut, and/or hardening. If necessary, replace.

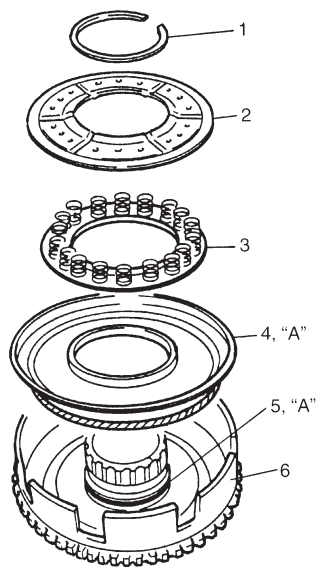

1. Snap ring

ASSEMBLY

1) Install new D-ring (5) to front clutch No.1 drum.
   Apply grease to D-ring and fit it to drum.

   "A": Grease 99000-25030

2) Install piston (4) into front clutch No.1 drum (6).
   Use care that the piston lip does not get twisted or caught.
   Apply grease to the lip of the piston.

   "A": Grease 99000-25030

3) Install front clutch return spring (3) seat and front clutch balancer (2).

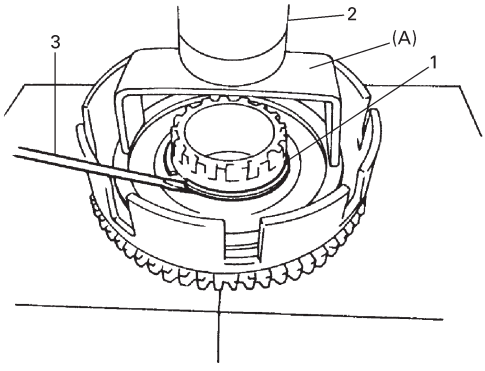

4) Install shaft snap ring (1).
   Compress return springs and install shaft snap ring in groove by using a flat end rod or the like (3).
   Place special tool (clutch spring compressor) on spring seat and compress springs with a press (2).

   CAUTION:
   Do not compress return spring more than necessary.

   Special Tool
   (A): 09926-96010

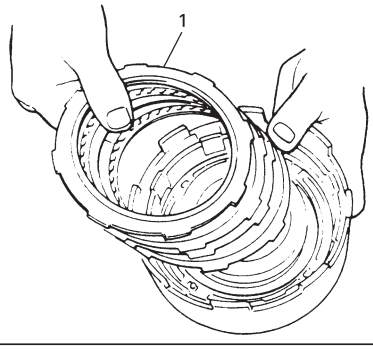

5) Install discs, plates and flange (1) in following order.
   (1) Plate → (2) Disc → (3) Plate → (4) Disc → (5) Plate → (6) Disc → (7) Plate → (8) Disc → (9) Flange

   NOTE:
   Before assembly, new discs should be soaked in automatic transmission fluid for at least 2 hours.

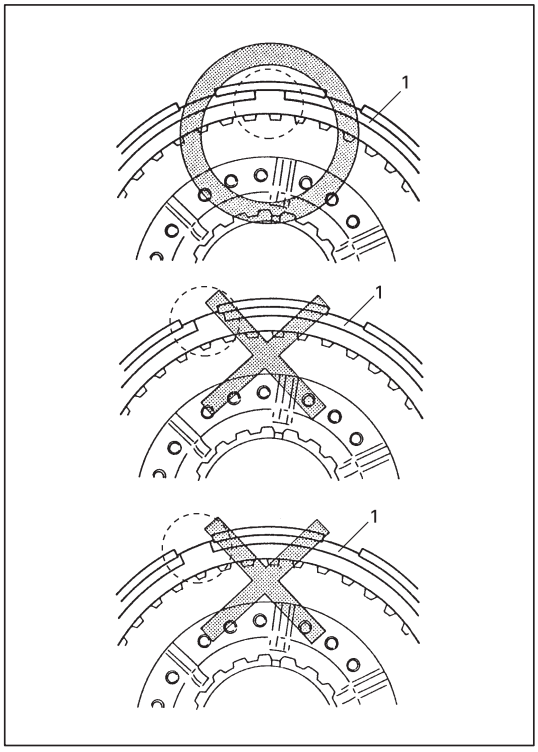

6) Install snap ring (1).

NOTE:
Make sure that the ends of the snap ring do not come to the opening of the front clutch No.1 drum.

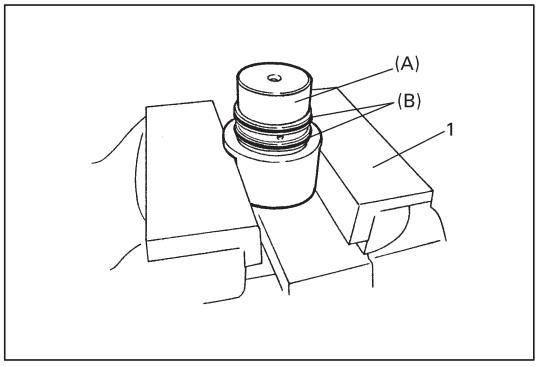

7) Place special tool (A) on soft jawed vise (1) and install 2 oil seal rings on special tool.
Special Tool
(A): 09926-26030
SUZUKI GENUINE PARTS
(B): Clutch drum seal ring 22831-83E10
NOTE:
- **Clutch drum seal set has two seal rings in a set.**
- **Do not use the seal rings removed from oil pump ass'y. It is not necessary to remove seal rings from special tool once installed.**

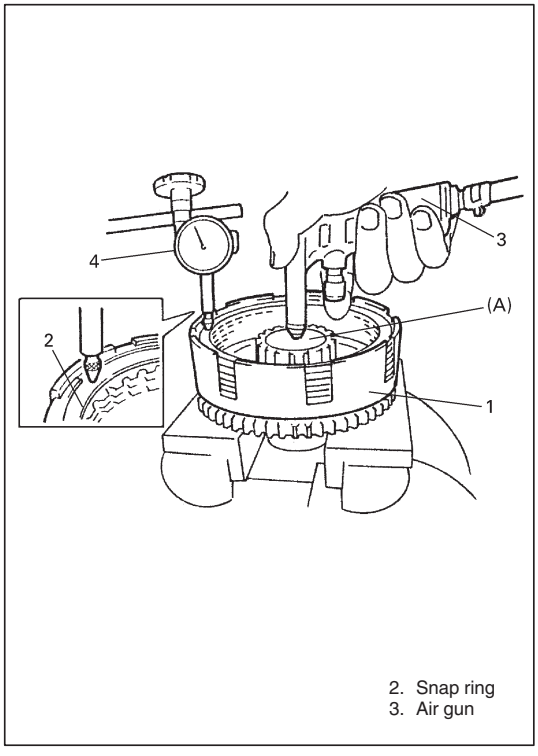

8) Place front clutch assembly (1) on special tool (A).
9) Set dial gauge (4) on the top of clutch flange and measure clearance by blowing compressed air (4 kg/cm^2, 57 psi) as shown in figure.

Clearance: 0.47 – 1.14 mm (0.0185 – 0.0448 in.)

If the clearance is out of specification, replace clutch discs, plates and flange.

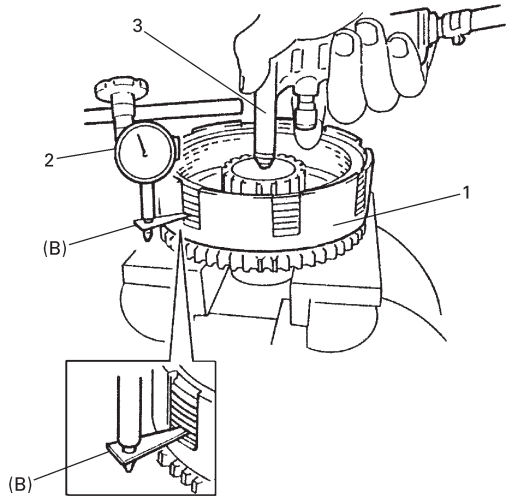

1. Front clutch assembly
3. Air gun

10) Attach special tool (B) to dial gauge (2) and set them on the lowest clutch plate.

Special Tool
(B): 09952-06010

Measure piston stroke by blowing compressed air (4 kg/cm^2, 57 psi) as shown in figure.

Piston Stroke: 1.46 – 1.64 mm (0.0575 – 0.0646 in.)

If the piston stroke is out of specification, replace clutch discs, plates and flange.

REAR CLUTCH (C1 CLUTCH)

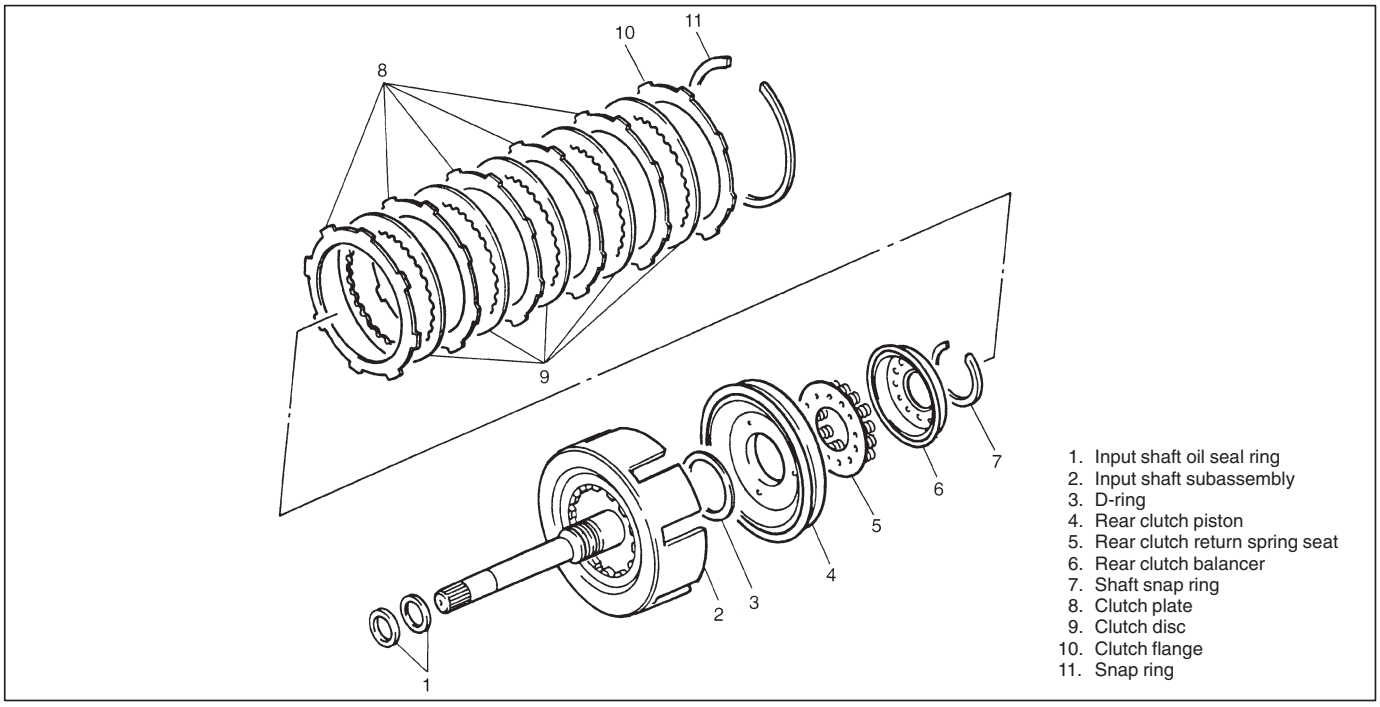

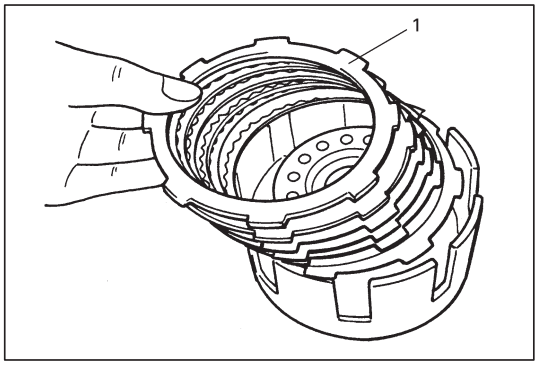

DISASSEMBLY

1) Remove snap ring.
2) Remove flange (1), discs and plates.

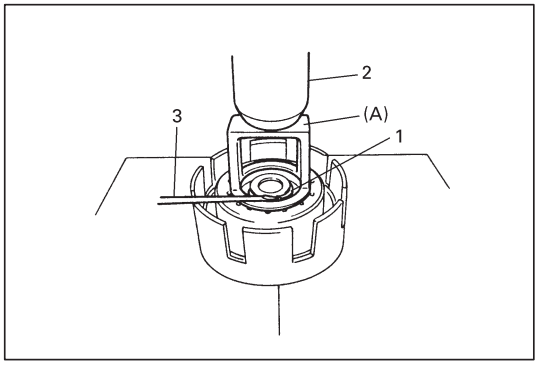

3) Remove shaft snap ring (1).
   Compress piston return springs and remove shaft snap ring. Place special tool (clutch spring compressor) on spring seat and compress spring with a press (2), and then remove shaft snap ring, using a flat end rod or the like (3).

CAUTION:
Do not push down return spring more than necessary.

Special Tool
(A): 09926-96020

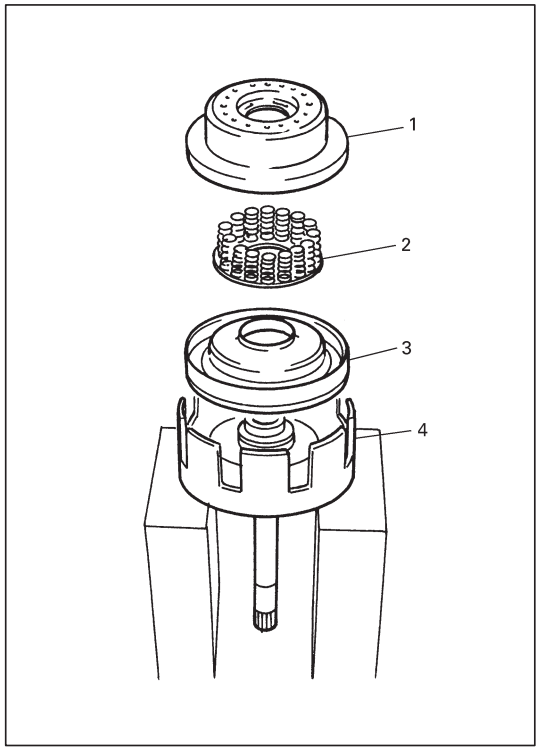

4) Remove rear clutch balancer (1) and rear clutch return spring seat (2).
5) Remove rear clutch piston (3).
   If piston does not pop out, blow compressed air through input shaft oil hole to remove piston.
6) Remove D-ring, and oil seals from input shaft subass'y (4).

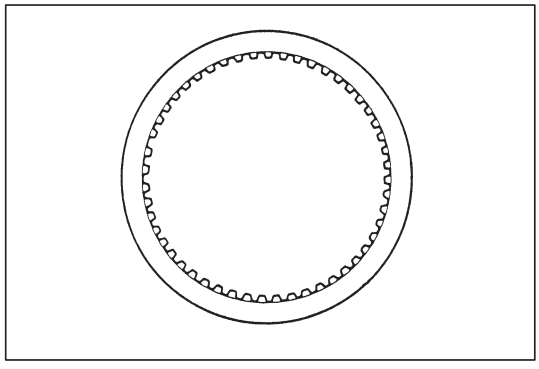

INSPECTION

Clutch Discs, Plates and Flange

Check that sliding surfaces of discs, plates and flanges are not worn or burnt. If necessary, replace.

NOTE:
- **If disc lining is exfoliated or discolored, replace all discs.**
- **Before assembling new discs, soak them in A/T fluid for at least two hours.**

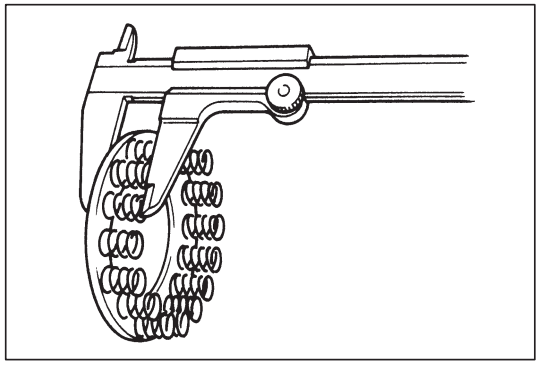

Rear Clutch Return Spring Seat

Measure height of overdrive clutch return spring.

Specified value: 22.01 mm (0.867 in.)

NOTE:
- **Do not apply excessive force when measuring spring height.**
- **Perform measurement at several points.**

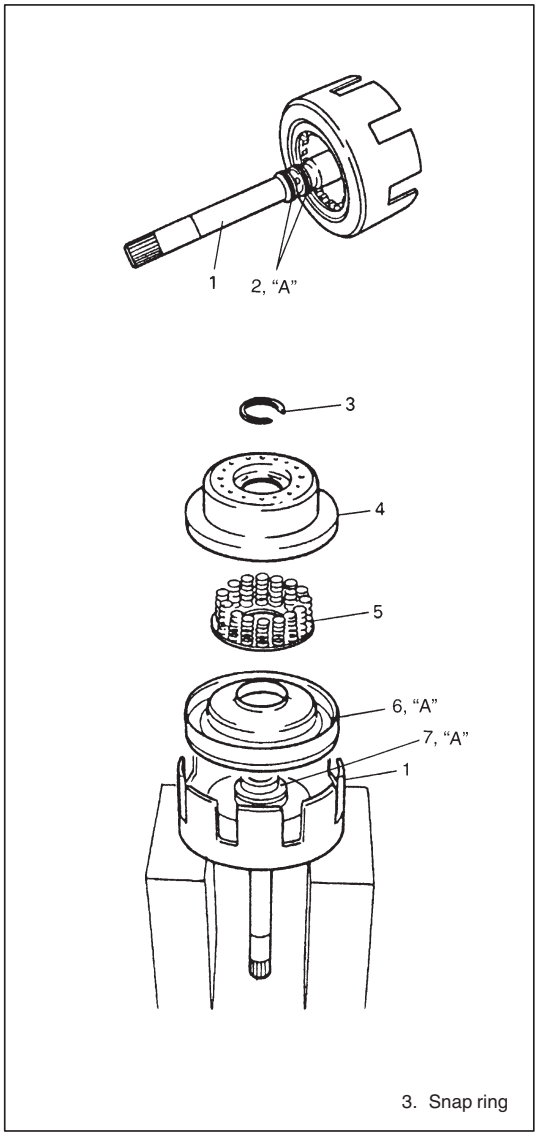

3. Snap ring

ASSEMBLY

1) Install new D-ring (7) and oil seals (2) to input shaft subass’y. Apply grease to D-ring and fit it to input shaft subass’y (1).

   “A”: Grease 99000-25030

2) Install piston (6) into input shaft subass’y. Apply grease to the lip of the piston.

   “A”: Grease 99000-25030

   Use care that the lip does not get twisted or caught.

3) Install rear clutch return spring seat (5) and rear clutch balancer (4).

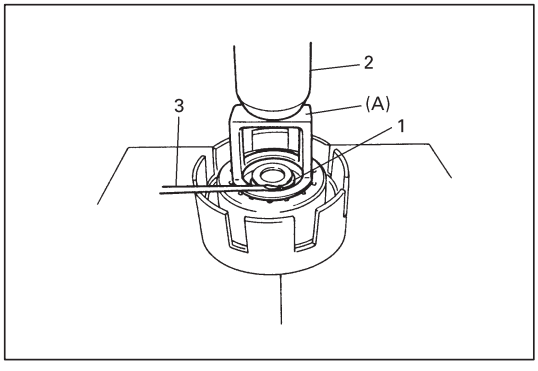

4) Install shaft snap ring (1).
   Compress return springs and install shaft snap rings in groove by using a flat end rod or the like (3).
   Place special tool (clutch spring compressor) on spring seat and compress springs with a press (2).

   CAUTION:
   Do not compress return spring more than necessary.

   Special Tool
   (A): 09926-96020

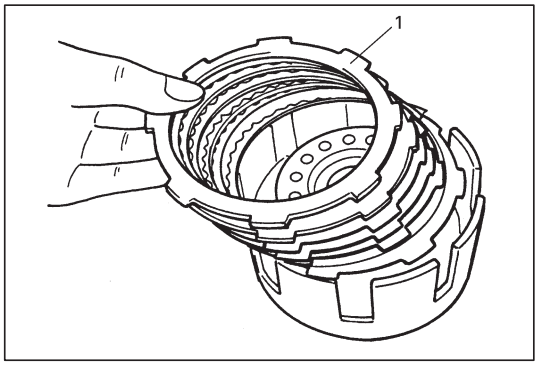

5) Install discs, plates and flange (1) in following order.
   (1) Plate → (2) Disc → (3) Plate → (4) Disc → (5) Plate → (6) Disc → (7) Plate → (8) Disc → (9) Plate → (10) Disc → (11) Flange

   NOTE:
   Before assembly, new discs should be soaked in automatic transmission fluid for at least 2 hours.

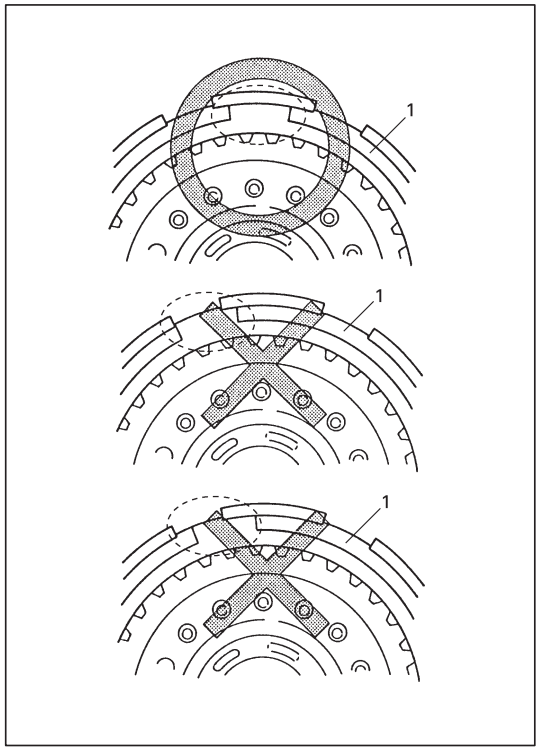

6) Install snap ring (1).

NOTE:
Make sure that the ends of the snap ring do not come to the opening of the input shaft subass'y.

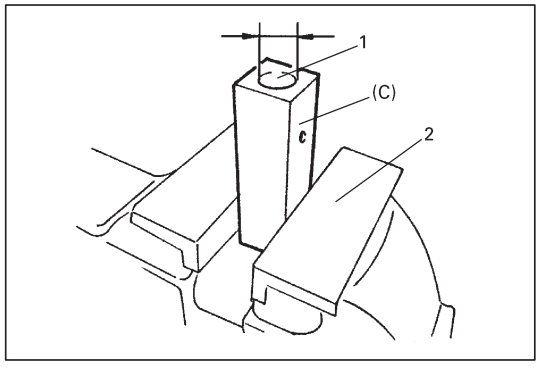

7) Place special tool (C) on soft jawed vise (2) with wider opening (1) facing up.

Special Tool
(C): 09926-26040

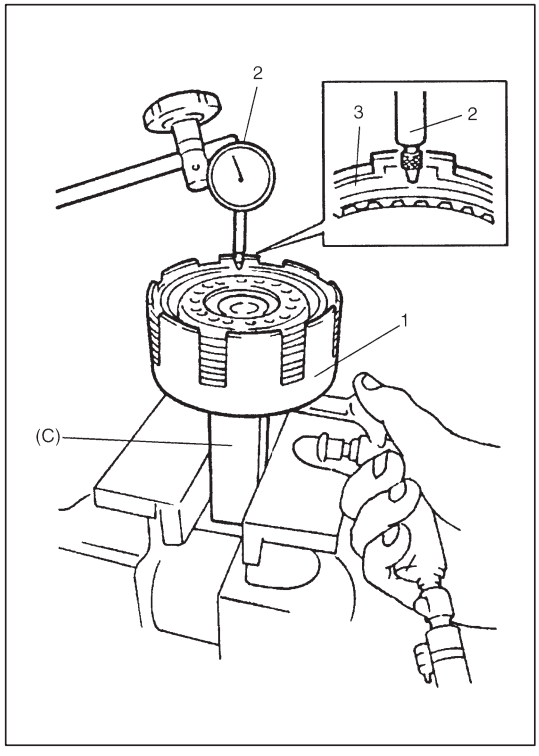

8) Place rear clutch assembly (1) on special tool (C).
9) Set dial gauge (2) on the top of clutch flange (3) and measure clearance by blowing compressed air (4 kg/cm^2, 57 psi) as shown in figure.

Clearance: 0.80 – 1.40 mm (0.031 – 0.055 in.)

If the clearance is out of specification, replace clutch discs, plates and flange.

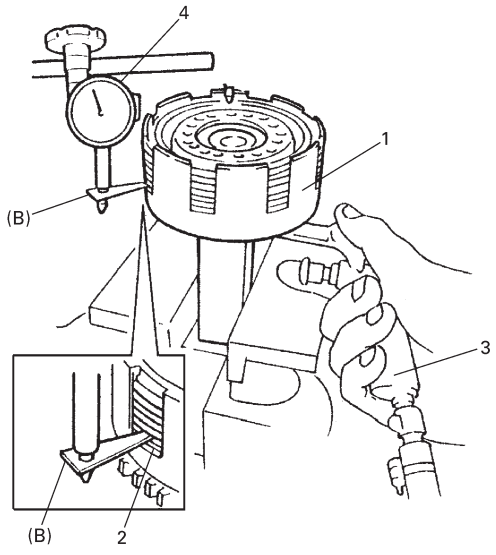

1. Rear clutch assembly
3. Air gun

10) Attach special tool (B) to dial gauge (4) and set them on the lowest clutch plate (2).

Special Tool
(B): 09952-06010

Measure piston stroke by blowing compressed air (4kg/cm^2, 57 psi) as shown in figure.

Piston Stroke: 1.93 – 2.13 mm (0.076 – 0.084 in.)

If the piston stroke is out of specification, replace clutch discs, plates and flange.

DIRECT CLUTCH (C0 CLUTCH)

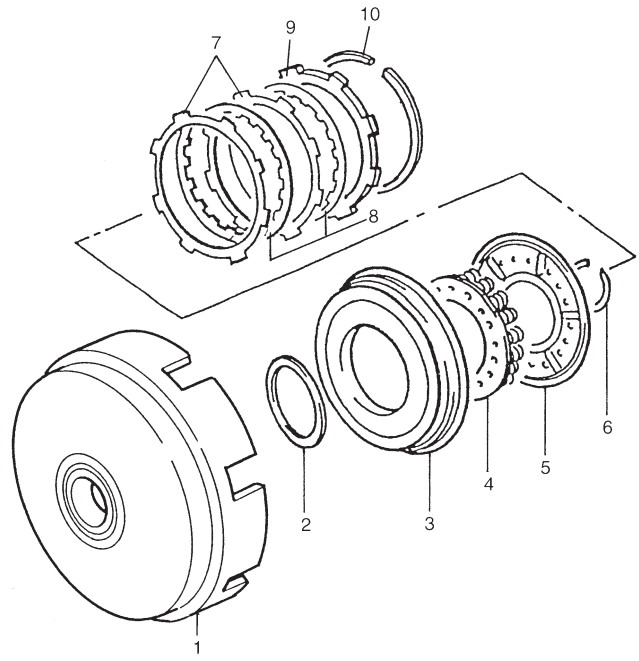

1. Direct clutch (C0) No.1 drum
2. D-ring
3. Direct clutch piston
4. Direct clutch return spring seat
5. Direct clutch balancer
6. Shaft snap ring
7. Clutch plate
8. Clutch disc
9. Clutch flange
10. Snap ring

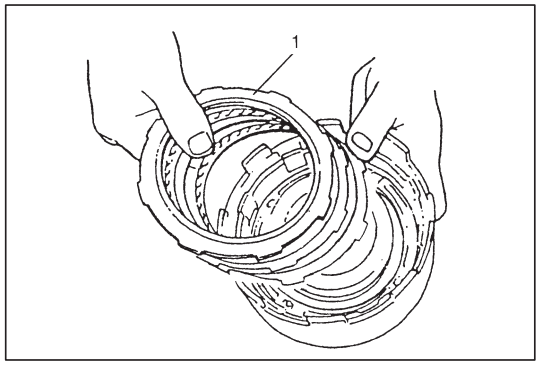

DISASSEMBLY

1) Remove snap ring.
2) Remove flange (1), discs and plates.

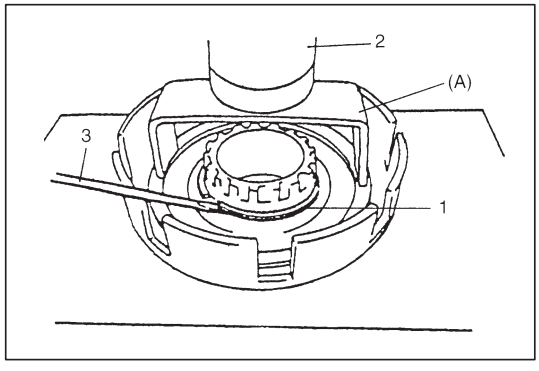

3) Remove shaft snap ring (1).
   Compress piston return springs and remove shaft snap ring. Place special tool (clutch spring compressor) on spring seat and compress spring with a press (2), and then remove shaft snap ring, using a flat end rod or the like (3).

CAUTION:
Do not push down return spring more than necessary.

Special Tool
(A): 09926-96010

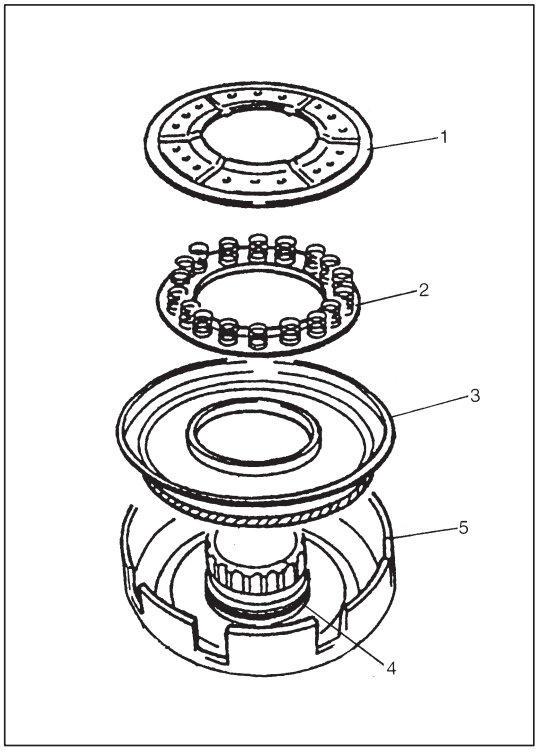

4) Remove direct clutch balancer (1) and direct clutch return spring seat (2).
5) Remove direct clutch piston (3).
   Blow compressed air through input shaft oil hole to remove piston. If piston does not pop out, take it out with long nose pliers.
6) Remove D-ring (4) from direct clutch No.1 drum (5).

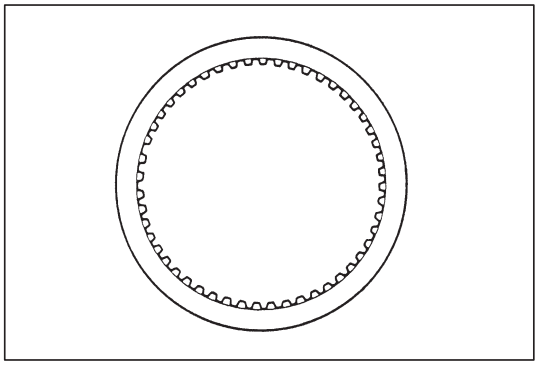

INSPECTION

Clutch Discs, Plates and Flange

Check that sliding surfaces of discs, plates and flanges are not worn or burnt. If necessary, replace.

NOTE:
- **If disc lining is exfoliated or discolored, replace all discs.**
- **Before assembling new discs, soak them in A/T fluid for at least two hours.**

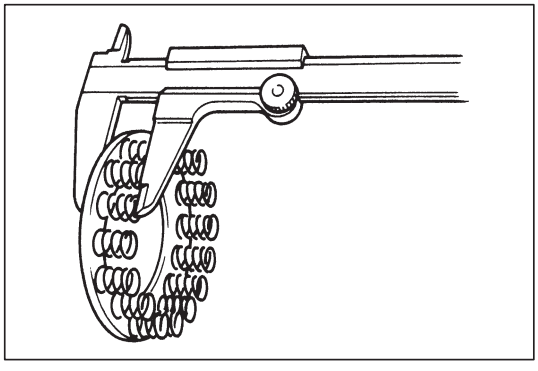

Direct Clutch Return Spring Seat

Measure height of direct clutch return spring.

Specified value: 16.3 mm (0.642 in.)

NOTE:
- **Do not apply excessive force when measuring spring height.**
- **Perform measurement at several points.**

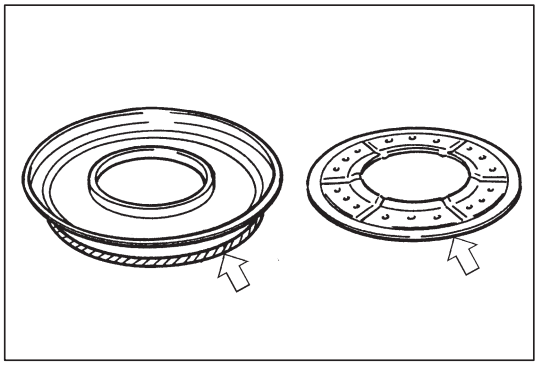

Direct Clutch Piston Lip and Direct Clutch Balancer Lip

Check each lip for wear, deformation, cut, and/or hardening. If necessary, replace.

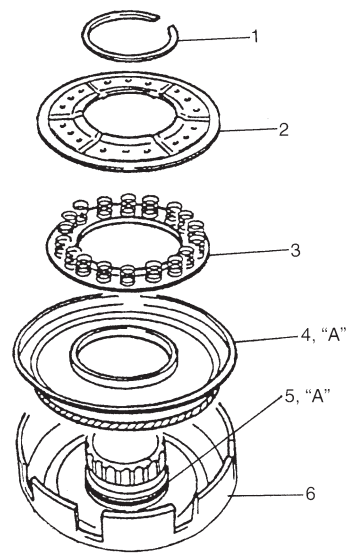

1. Snap ring

ASSEMBLY

1) Install new D-ring (5) to direct clutch No.1 drum (6).
   Apply grease to D-ring and fit it to drum.

   "A": Grease 99000-25030

2) Install piston (4) into direct clutch No.1 drum.
   Use care that the piston lip does not get twisted or caught.
   Apply grease to the lip of the piston.

   "A": Grease 99000-25030

3) Install direct clutch return spring seat (3) and direct clutch balancer (2).

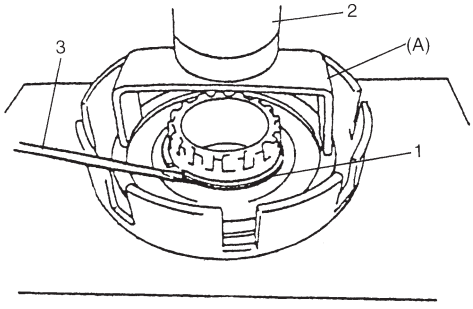

4) Install new shaft snap ring (1).
   Compress return springs and install shaft snap ring in groove by using a flat end rod or the like (3).
   Place special tool (clutch spring compressor) on spring seat and compress springs with a press (2).

   CAUTION:
   Do not compress return spring more than necessary.

   Special Tool
   (A): 09926-96010

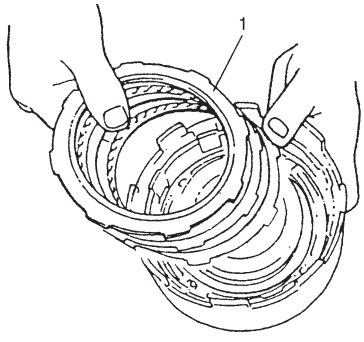

5) Install discs, plates and flange (1) in following order.
   (1) Flange No.1 → (2) Disc → (3) Plate → (4) Disc → (5) Flange No.2

   NOTE:
   Before assembly, new discs should be soaked in automatic transmission fluid for at least 2 hours.

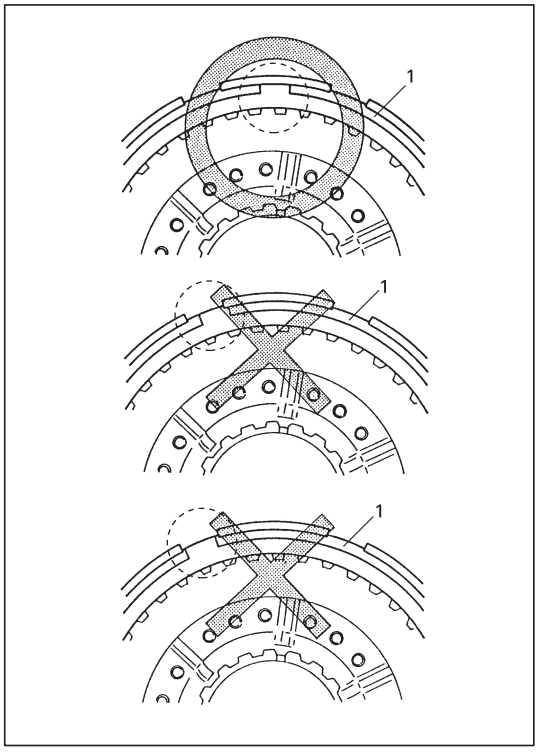

6) Install snap ring (1).

NOTE:
Make sure that the ends of the snap ring do not come to the opening of the front clutch No.1 drum.

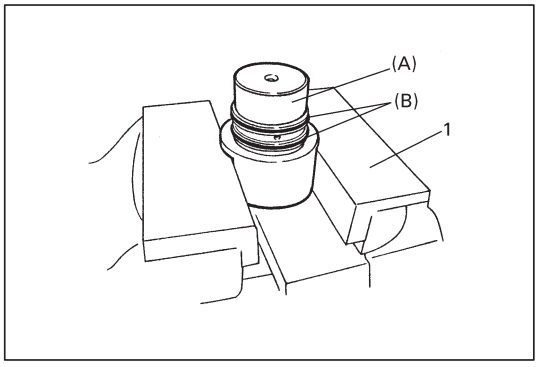

7) Place special tool (A) on soft jawed vise (1) and install 2 oil seal rings on special tool.
Special Tool
(A): 09926-26050
SUZUKI GENUINE PARTS
(B): Rear cover seal ring 24742-78F10
NOTE:
- **Rear cover seal set has two seal rings in a set.**
- **Do not use the seal rings removed from rear cover. It is not necessary to remove seal rings from special tool once installed.**

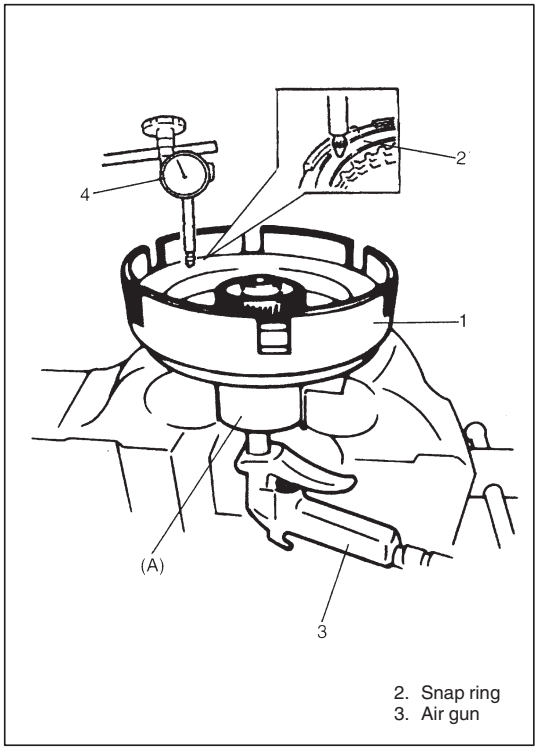

8) Place direct clutch assembly (1) on special tool (A).
9) Set dial gauge (4) on the top of clutch flange and measure clearance by blowing compressed air (4kg/cm^2, 57 psi) as shown in figure.

Clearance: 0.50 – 1.04 mm (0.0197 – 0.0409 in.)

If the clearance is out of specification, replace clutch discs, plates and flange.

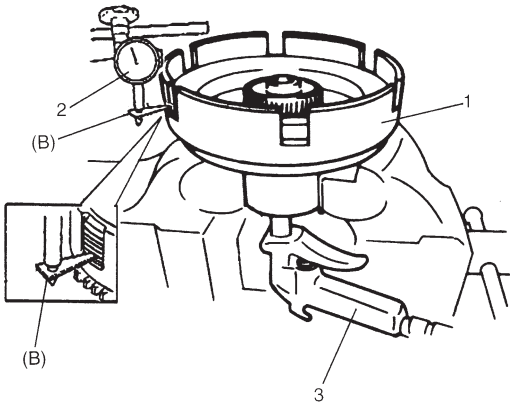

1. Direct clutch assembly
3. Air gun

10) Attach special tool (B) to dial gauge (2) and set them on the lowest clutch plate.

Special Tool
(B): 09952-06010

Measure piston stroke by blowing compressed air (4kg/cm^2, 57 psi) as shown in figure.

Piston Stroke: 0.96 – 1.14 mm (0.0378 – 0.0449 in.)

If the piston stroke is out of specification, replace clutch discs, plates and flange.

PLANETARY SET

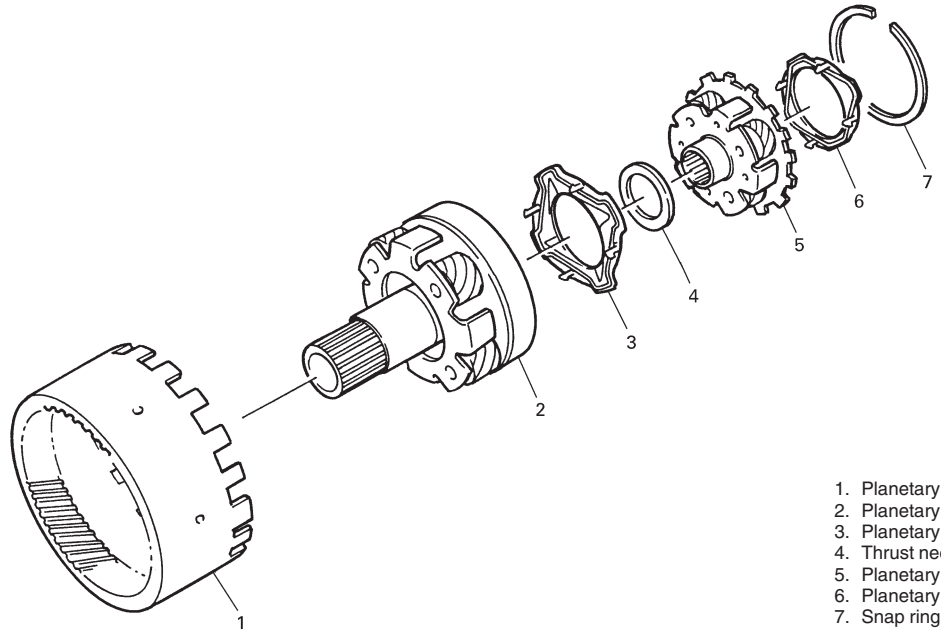

1. Planetary ring gear No.2
2. Planetary gear ass'y No.2
3. Planetary oil receiver No.2
4. Thrust needle roller bearing
5. Planetary gear ass'y No.1
6. Planetary oil receiver No.1
7. Snap ring

DISASSEMBLY

1) Remove snap ring.
   Remove planetary ring gear No.2.

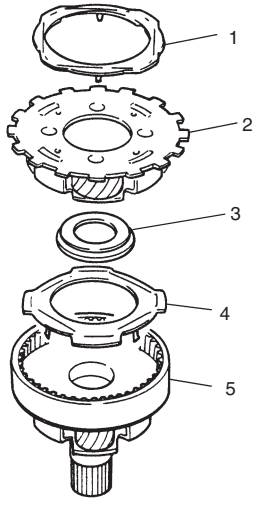

2) Remove planetary oil receiver No.1 (1) and planetary gear ass'y No.1 (2) from planetary gear ass'y No.2 (5).
3) Remove needle roller bearing (3) and planetary oil receiver No.2 (4) from planetary gear ass'y No.2.

NOTE:
Do not reuse oil receivers (1 and 4).

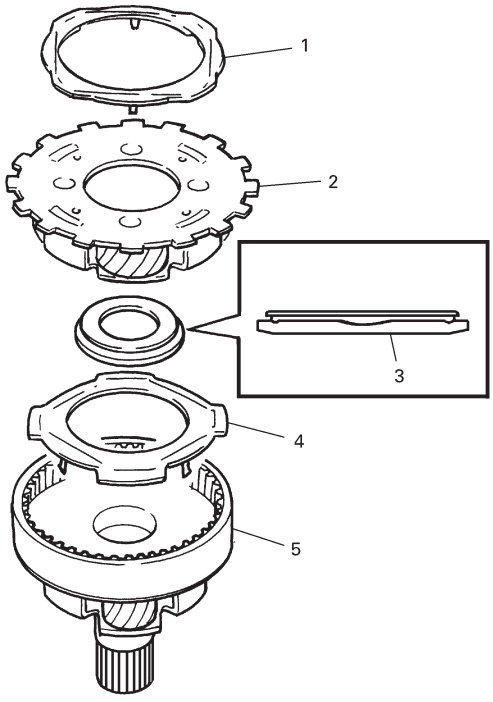

ASSEMBLY

1) Install new planetary oil receiver No.2 (4) and needle roller bearing (3) to planetary gear ass'y No.2 (5).

   NOTE:
   - **Note the direction of needle roller bearing.**
   - **Take care not to break the claw of oil receiver.**

2) Install planetary gear ass'y No.1 (2) to planetary gear ass'y No.2 (5).
3) Install new planetary oil receiver No.1 (1).

   NOTE:
   Take care not to break the claw of oil receiver.

4) Assemble planetary ring gear No.2 and planetary gear ass'y No.2.

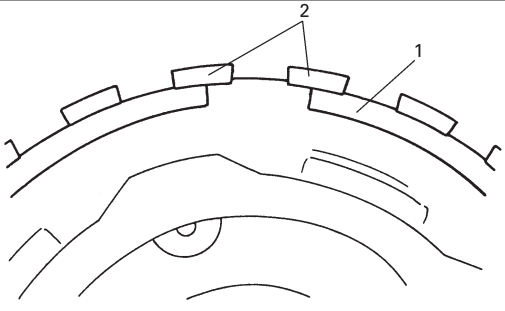

2. Planetary ring gear No.2

5) Install snap ring (1).

   NOTE:
   Note the location of the ends of the snap ring.

VALVE BODY

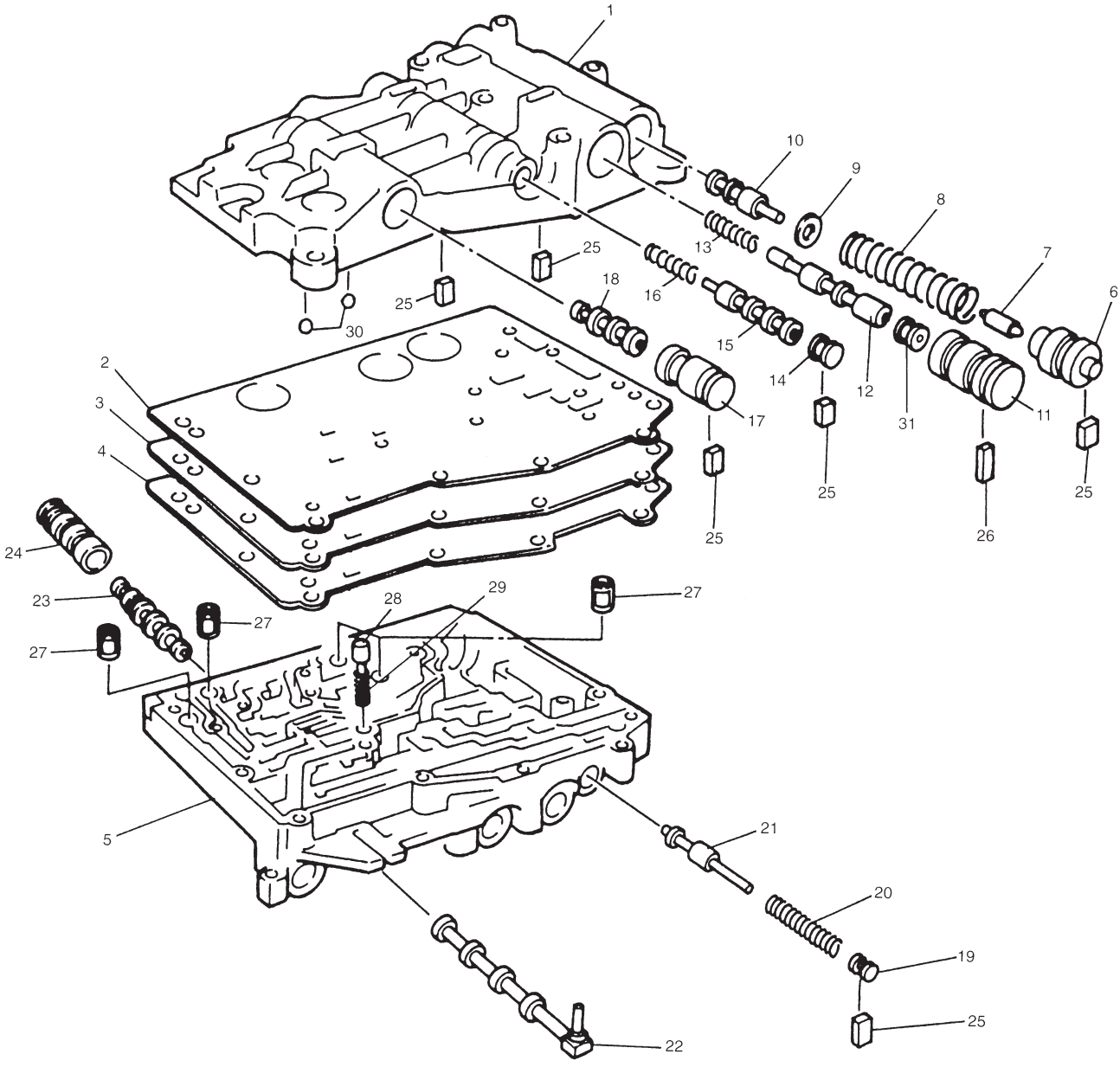

1. Upper valve body
2. Upper valve body gasket
3. Valve body plate
4. Lower valve body gasket
5. Lower valve body
6. Primary regulator valve sleeve
7. Primary regulator valve plunger
8. Primary regulator valve spring
9. Washer
10. Primary regulator valve
11. Lock-up control valve sleeve
12. Lock-up control valve
13. Lock-up control valve spring
14. Lock-up signal valve plug
15. Lock-up signal valve
16. Lock-up signal valve spring
17. Fail valve No.2 sleeve
18. Fail valve No.2
19. Secondary regulator valve plug
20. Secondary regulator valve spring
21. Secondary regulator valve
22. Manual valve
23. Fail valve No.1
24. Fail valve No.1 sleeve
25. Key (short)
26. Key (long)
27. Oil strainer
28. Cooler by-pass valve
29. Cooler by-pass valve spring
30. Steel ball
31. Lock-up control valve

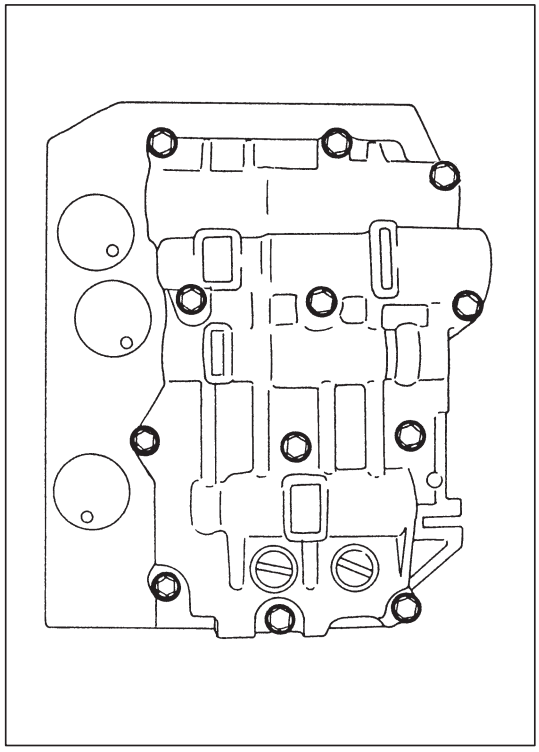

VALVE BODY ASS'Y

Disassembly

1) Remove manual valve.
2) Remove 12 bolts from lower valve body.

NOTE:

- **There are 4 different kinds of bolt fixing upper and lower valve body. Do not mix them up and remember where they belong to.**
- **When separating lower and upper valve body, be careful not to let the steel ball to fall off.**

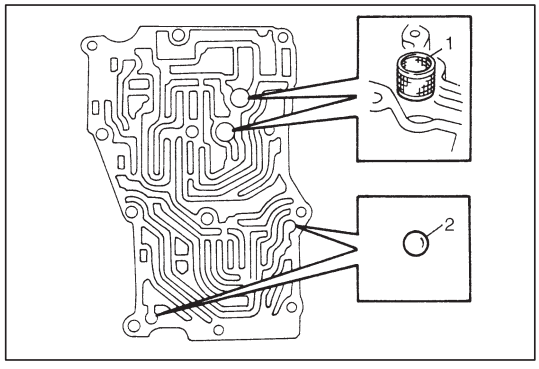

UPPER VALVE BODY

Disassembly

1) Remove oil strainers (1) and steel balls (2).

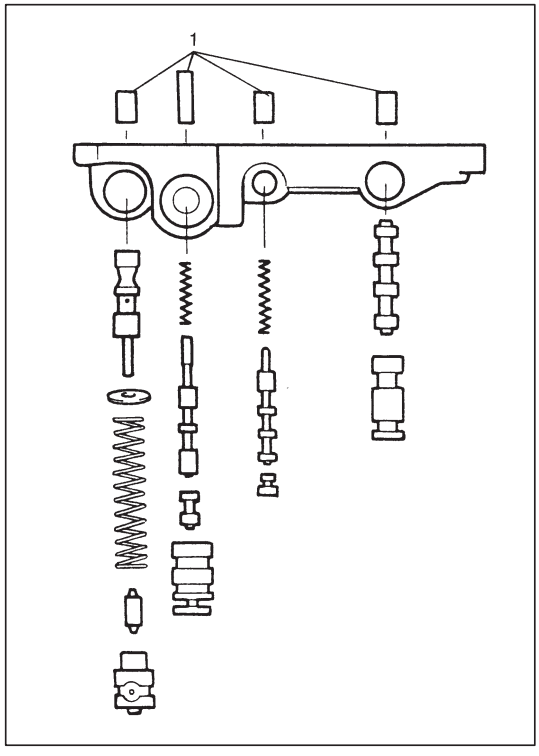

2) Remove keys (1).
3) Pull out all sleeves, valves, plungers, springs and washer.

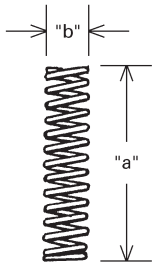

Reference

Primary regulator valve spring (compression spring)

Spring	Free length “a” (mm)	Outside diameter “b” (mm)
Primary regulator valve spring	79.2	18.0
Lock-up control valve spring	31.1	8.5
Lock-up signal valve spring	36.1	8.5

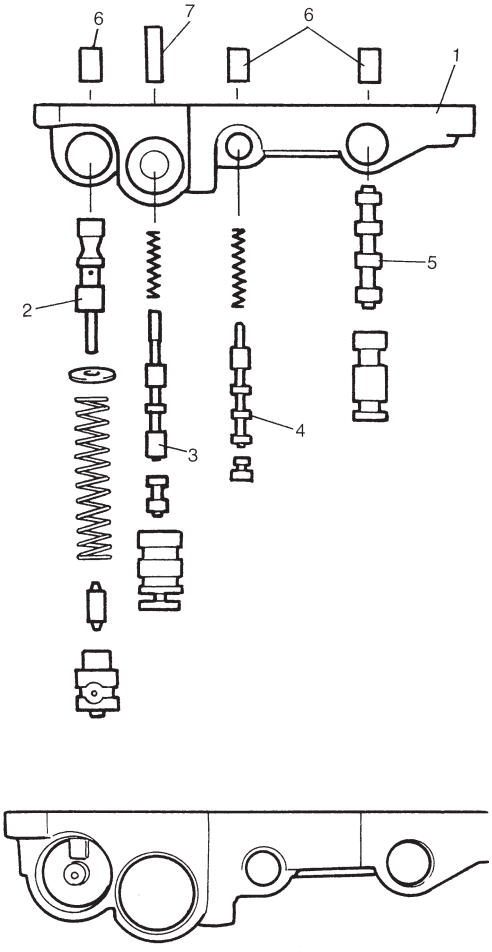

1. Upper valve body
3. Lock-up control valve
4. Lock-up signal valve
5. Fail valve No.2
6. Key (short)
7. Key (long)

Assembly

1) Apply A/T fluid to each valve, plate washer, spring, plunger, sleeve and key.
   Insert primary regulator valve (2) about half way then place plate washer and spring. Push in primary regulator valve ass’y all the way in. Insert plunger with sleeve and hold them with the key.

   NOTE:
   - **Note the location of the key shown in picture.**
   - **Compression spring has a identification color paint of yellow.**
   - **Note the direction of the primary regulator valve.**

2) Apply A/T fluid to each valve, sleeve spring, plug and key and insert them, then fix them with the key.

   NOTE:
   Note the direction of the fail valve.

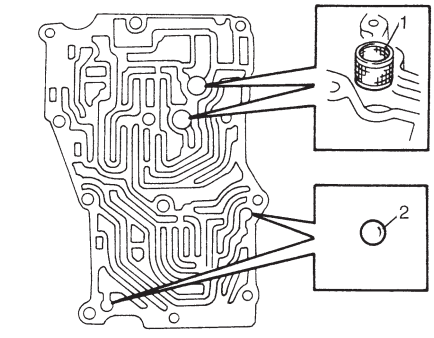

3) Install oil strainers (1) and put steel balls (2).

   NOTE:
   Clean oil strainer before installing.

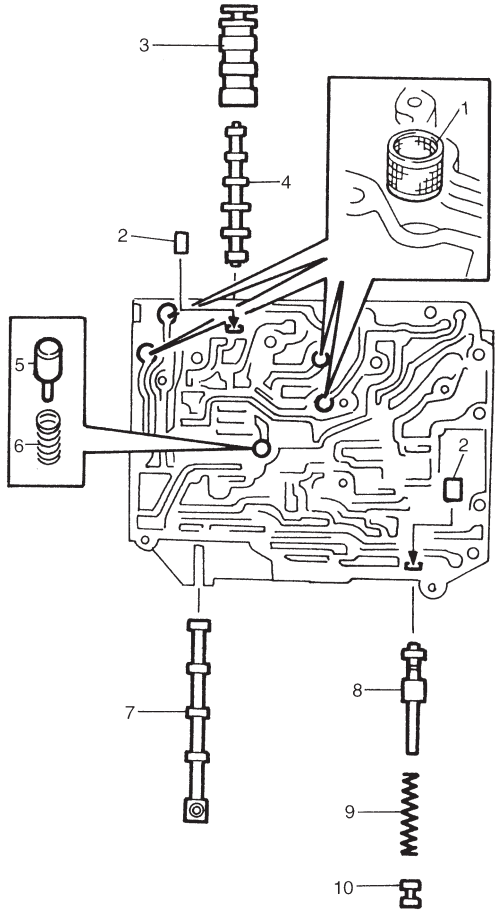

3. Fail valve No.1 sleeve
4. Fail valve No.1
5. Cooler by-pass valve
6. Cooler by-pass valve spring
7. Manual valve
8. Secondary regulator valve
9. Secondary regulator valve spring
10. Secondary regulator valve plug

LOWER VALVE BODY

Disassembly

1) Remove oil strainers (1).
2) Remove solenoid valves, if still attached.
3) Remove keys (2) and pull out all sleeve, plug, spring and valves.

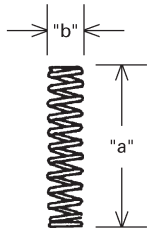

Reference

Secondary Regulator Valve Spring (compression spring)

Free length “a”: 38.7 mm (1.52 in.)
Outside diameter “b”: 8.8 mm (0.35 in.)

Cooler By-pass valve spring
Free length “a”: 22.8 mm (0.90 in.)
Outside diameter “b”: 8.0 mm (0.31 in.)

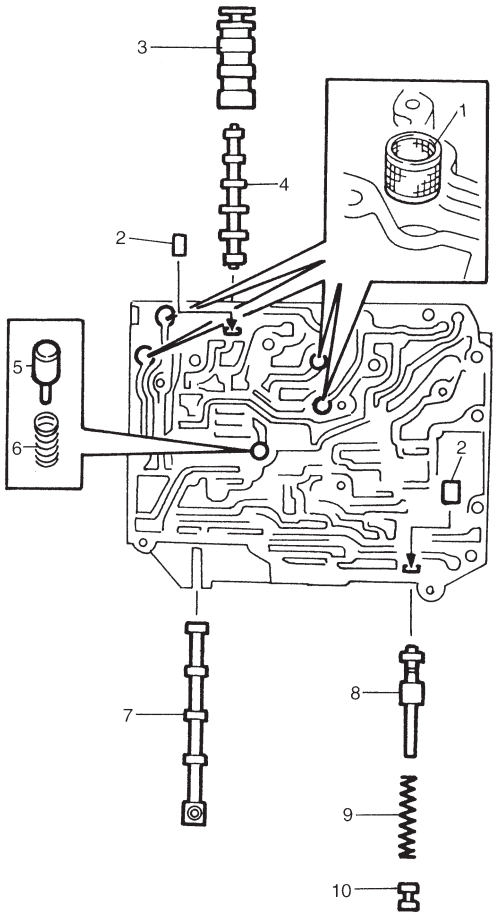

1. Oil strainer
2. Key (short)
3. Fail valve No.1 sleeve
4. Fail valve No.1
5. Cooler by-pass valve
6. Cooler by-pass valve spring
7. Manual valve
8. Secondary regulator valve
9. Secondary regulator valve spring
10. Secondary regulator valve plug

Assembly

1) Apply A/T fluid to each valve, spring, sleeve and key. Insert them, then fix with key.

   NOTE:
   Make sure that the fail valve No.2 and secondary regulator valve is inserted in the right direction.

2) Insert oil strainers to lower valve body.

   NOTE:
   Clean oil strainer before installing.

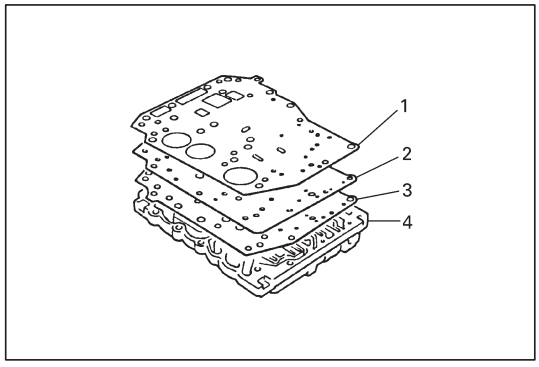

VALVE BODY ASSEMBLY

Assembly

1) Install gasket for lower valve body (3), valve body plate (2) and gasket for upper valve body (1) to lower valve body (4).

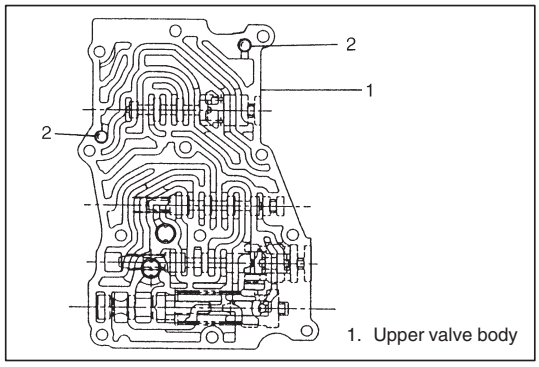

2) Make sure that steel balls (2) are at the location shown in figure.

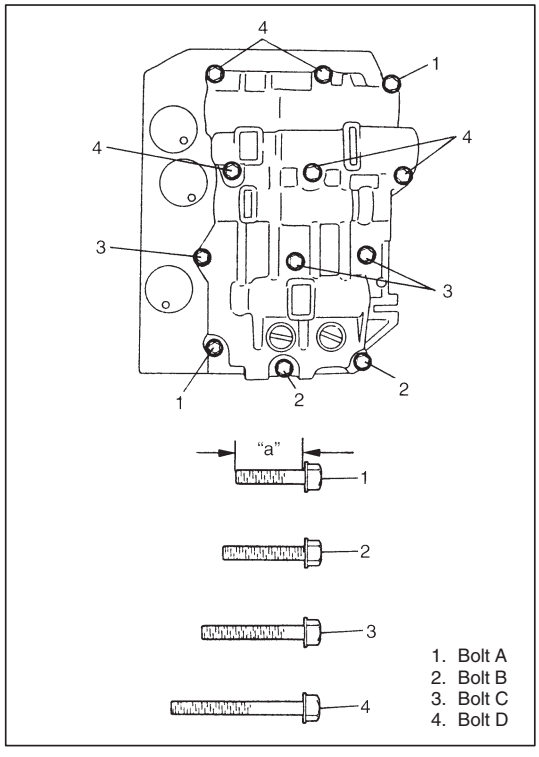

3) Assemble lower valve body with gaskets and plate over upper valve body.
First tighten bolts A then the other bolts.

Tightening Torque
(a): 5.5 N·m (0.55 kg-m, 4.0 lb-ft)

NOTE:
- **Be careful not to fall steel balls off.**
- **There are four kinds of bolts fixing upper and lower valve body. Refer to the table below for the bolt specifications.**

Bolt	Length "a"	Pieces
A	20 mm (0.79 in.)	2
B	23 mm (0.91 in.)	2
C	29.5 mm (1.16 in.)	3
D	42 mm (1.65 in.)	5

4) Install manual valve to valve body ass'y.

DIFFERENTIAL ASSEMBLY

Servicing procedure for differential assembly is similar to that for manual transmission. Refer to Section 7A of this manual for adjustment procedure.

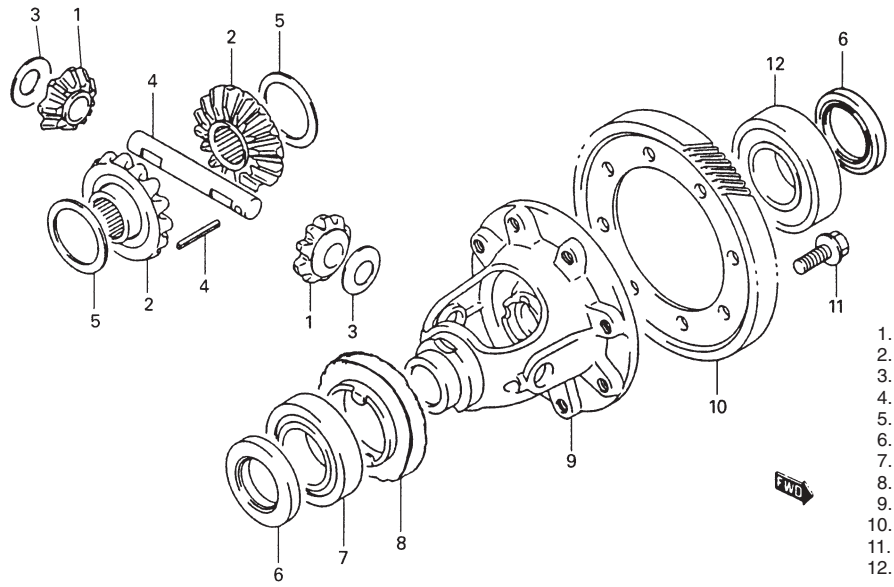

1. Differential pinion
2. Differential gear
3. Washer (for pinion)
4. Pinion shaft
5. Washer (for gear)
6. Differential side oil seal
7. Differential right side bearing (R bearing)
8. Speedometer drive gear
9. Differential case
10. Final gear
11. Bolt
12. Differential left side bearing (L bearing)

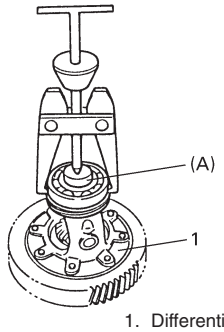

1. Differential gear ass'y

DISASSEMBLY

1) Remove R bearing and then speed sensor rotor using special tool and puller.

Special tool:
(A): 09925-88210

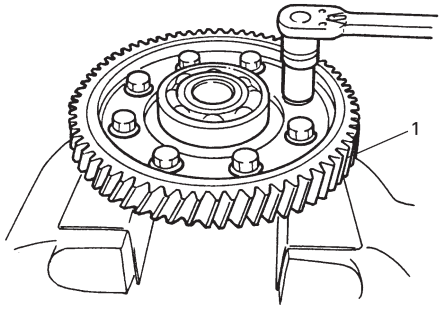

2) Hold differential ass'y with soft jawed vise, remove final gear (1).

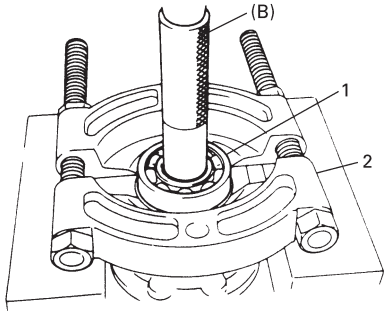

3) Remove differential side L bearing (1).
Drive it out by using special tool, bearing puller (2) and press.

Special Tool
(B): 09913-80112

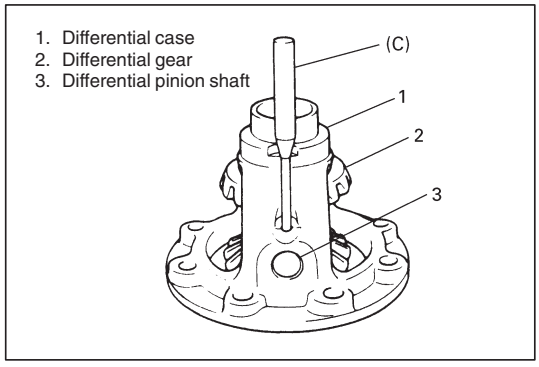

4) Remove side pinion shaft pin.
   Use special tool and hammer for its removal.

   Special Tool
   (C): 09922-85811

5) Remove side pinion shaft, differential pinions with each washer, differential gears with each washer.

ADJUSTMENT AND REASSEMBLY

Prepare replacing parts as required and proceed to reassembly. Make sure that all parts are clean.

1) Install differential gears.
   Measure and adjust thrust play referring to Section 7A.
   If thrust play is out of specification, select suitable thrust washer from among following available size, install it and check again that specified gear play is obtained.

Available thrust washer thickness	0.9, 0.95, 1.0, 1.05, 1.1, 1.15 and 1.2 mm (0.035, 0.037, 0.039, 0.041, 0.043, 0.045, and 0.047 in.)

   Then assemble them with suitable thrust washers.

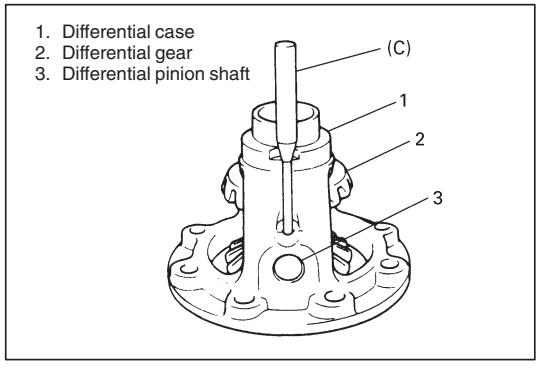

2) Drive in side pinion shaft pin from right side till it is flush with diff. case surface.

   Special Tool
   (C): 09922-85811

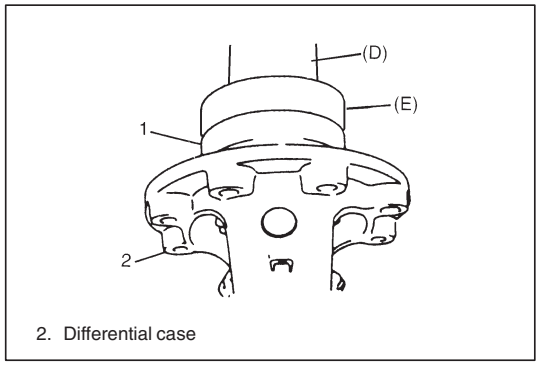

3) Install differential side L bearing (1). Press-fit it by using special tool and copper hammer.

   Special Tool
   (D): 09924-74510
   (E): 09926-68310

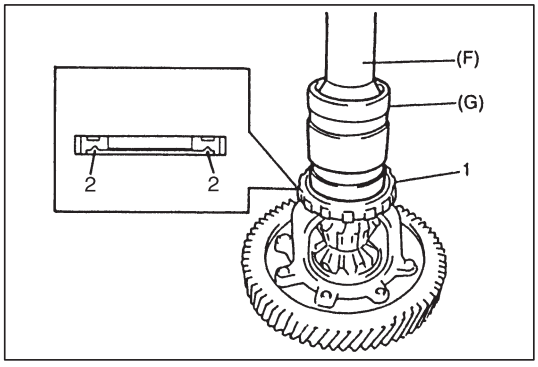

4) Press-fit new sensor rotor (1) with groove (2) side downward as shown by using special tools and copper hammer.

Special Tool
(F): 09951-76010
(G): 09940-54910

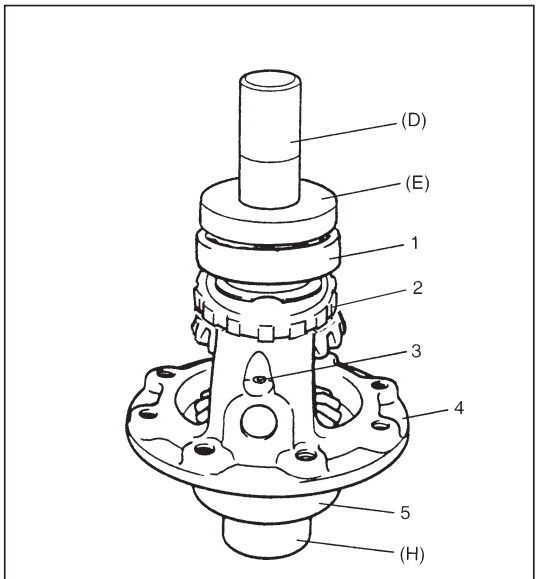

1. Differential side R bearing
2. Speedometer drive gear
3. Differential side pinion shaft pin
4. Differential case
5. Differential side L bearing

5) Support differential assembly as illustrated so as to float L bearing, and then press-fit R bearing by using special tool and copper hammer.

Special Tool
(D): 09924-74510
(E): 09926-68310
(H): 09951-16060

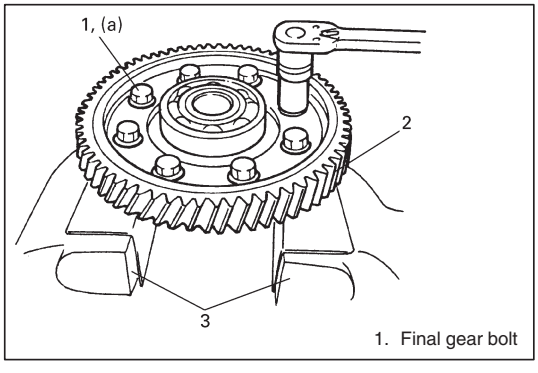

1. Final gear bolt

6) Hold differential assembly with soft jawed vise (3), install final gear (2) and then tighten it with 8 bolts to specified torque.

CAUTION:
Use of bolts other than specified ones is prohibited.

Tightening Torque
(a): 90 N·m (9.0 kg-m, 65.0 lb-ft)

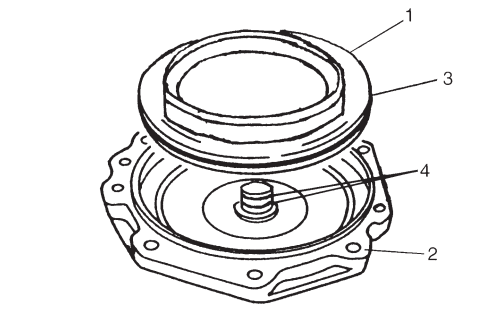

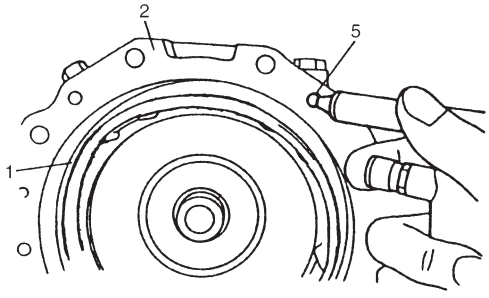

REAR COVER (B0 Piston Assembly)

DISASSEMBLY

1) Remove O/D brake piston (1) from rear cover (2).

   NOTE:
   If O/D brake piston is hard to take it out, force low-pressure compressed air (1 kg/cm^2, 15 psi, 100 kPa max) into hole (5) shown in figure and pop out piston into a rag.

2) Remove O-ring (3) and seal ring (4).
   Replace them, if damaged.

ASSEMBLY

1) Install seal rings to rear cover and O-rings to O/D brake piston.
2) Apply grease to O-rings and install O/D brake piston to rear cover.

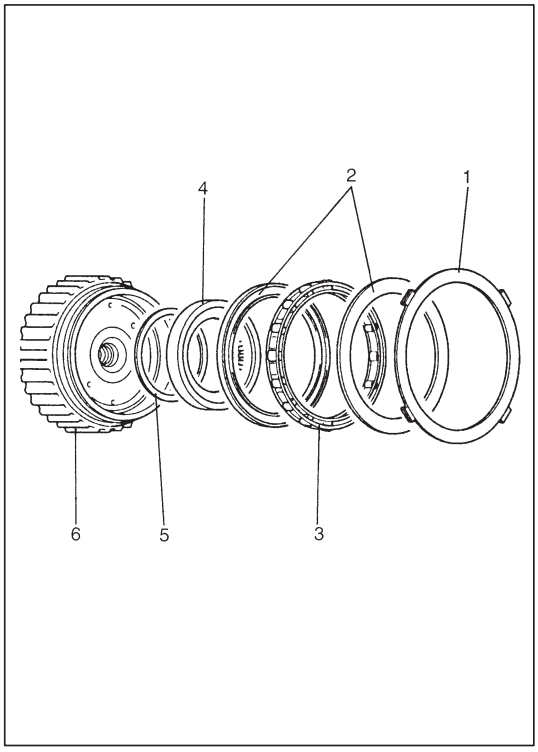

PLANETARY SUN GEAR NO.1 ASSEMBLY

DISASSEMBLY

1) Remove one-way clutch retainer (1) from planetary sun gear No.1 assembly.

   NOTE:
   Do not reuse retainer.

2) Remove one-way clutch bearings (2), one-way clutch (3), inner race (4) and washer (5) from planetary sun gear No.1 (6).

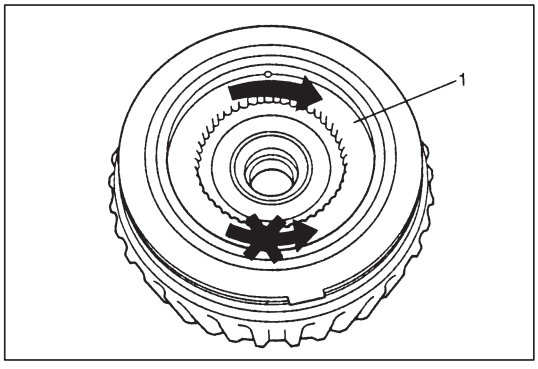

ASSEMBLY

Reverse removal procedure noting followings.

- When installing retainer, fit 2 hooks of retainer on planetary sun gear No.1 and tap the other 2 hooks with plastic hammer.

After assembling, make sure that:

- There is no clearance between retainer and bearing.
- Inner race (1) can rotate only one direction shown in figure.
- Fit 2 protrusions of washer to holes of planetary sun gear No.1.

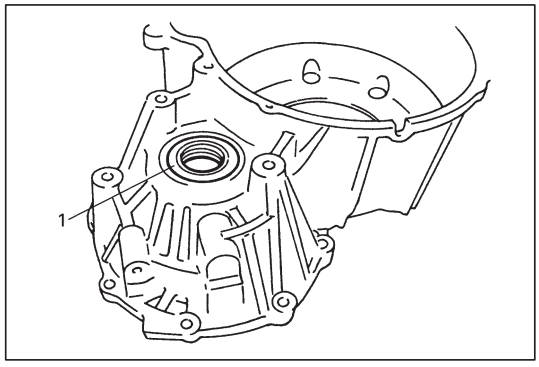

TORQUE CONVERTER HOUSING

DISASSEMBLY

1) Remove oil seal (1).

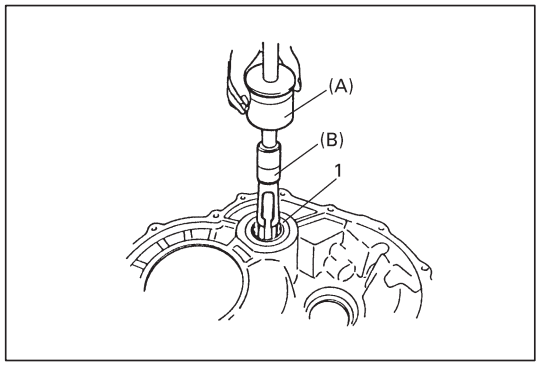

2) Remove counter bearing (1) using special tools.

Special Tool:
(A): 09930-30102
(B): 09923-74510

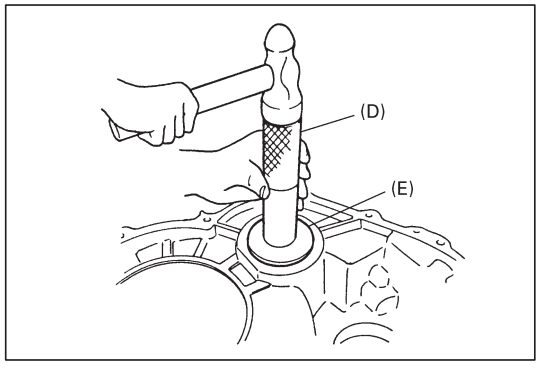

ASSEMBLY

1) Install counter bearing to torque converter housing.
   Use special tools and a hammer to press fit the bearing to torque converter housing.

   Special Tool:
   (D): 09924-74510
   (E): 09944-68510

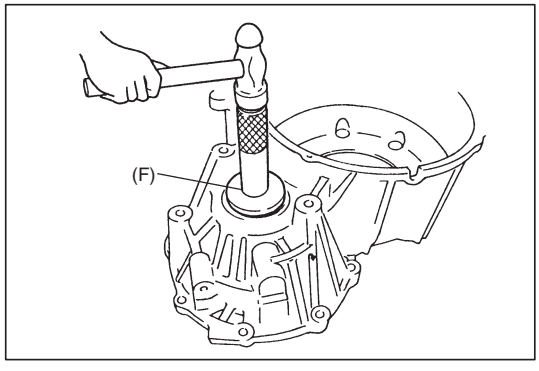

2) Install new oil seal to torque converter housing.
   Use special tool to press-fit oil seal until the oil seal end face is flush with torque converter housing end face.

   Special Tool:
   (F): 09913-75510

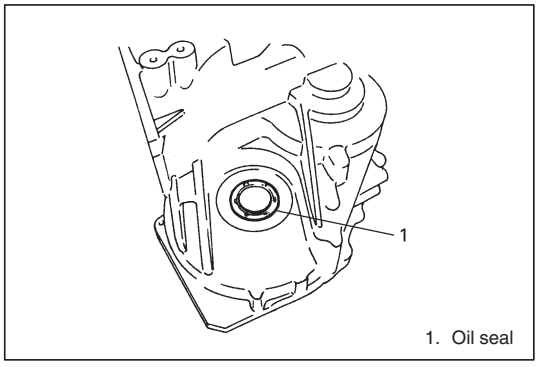

1. Oil seal

TRANSMISSION CASE

DISASSEMBLY

1) Remove oil seal (1).

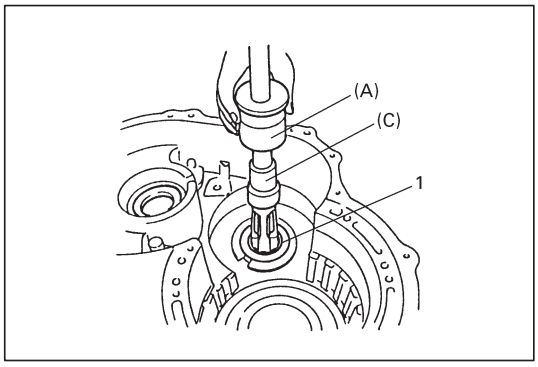

2) Remove counter bearing (1) using special tools.

Special Tool:
(A): 09930-30102
(C): 09941-64511

ASSEMBLY

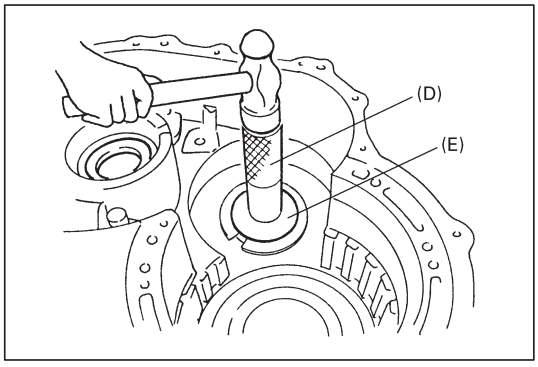

1) Install counter bearing using special tools.

Special Tool:
(D): 09924-74510
(E): 09944-68510

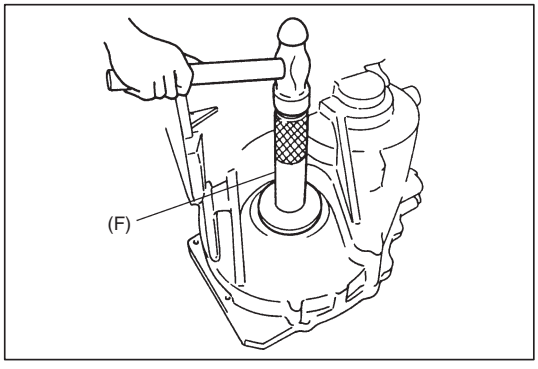

2) Install new oil seal to transmission case.
Use special tool to press-fit oil seal until oil seal end face is flush with transmission case end face.

Special Tool:
(F): 09913-75510

UNIT ASSEMBLY

CAUTION:
- **Automatic transmission consists of highly precise parts. As even a flaw in a small part may cause oil leakage or decrease in function, check each part carefully before installation.**
- **Clean all parts with compressed air. Never use wiping cloths or rags.**
- **Before assembling new clutch discs and brake band, soak them in automatic transmission fluid for at least 2 hours.**
- **Be sure to use new gaskets and O-rings.**
- **Lubricate O-rings with automatic transmission fluid.**
- **Apply automatic transmission fluid on sliding or rotating surfaces of the parts before assembly.**
- **Use yellow petrolatum grease or Suzuki Super Grease C to retain parts in place.**
- **Be sure to install thrust bearings and races in correct direction and position.**
- **Make sure that snap ring ends are not aligned with one of cutouts and are installed in groove correctly.**
- **Do not use adhesive cements on gaskets and similar parts.**
- **Be sure to torque each bolt and nut to specification.**

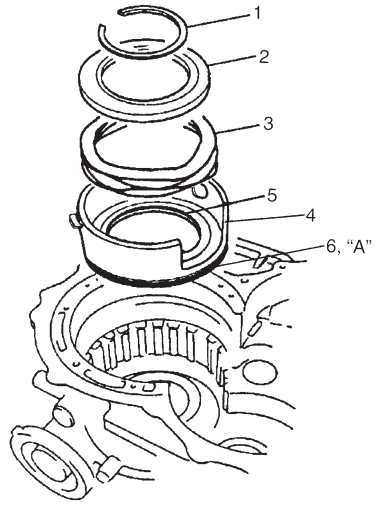

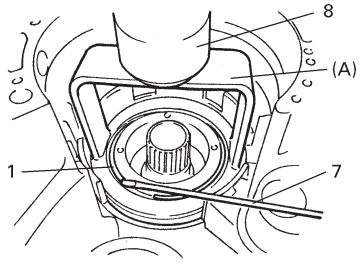

1. Snap ring
7. Flat end rod or the like

1) Install new O-rings (inside (5) and outside (6)) to reverse brake piston (4), and apply grease to them.

   "A" Grease: 99000-25030

2) Install reverse brake piston (4), wave spring (3) and reverse brake piston seat (2) to transmission case.
3) Install new snap ring (1) by compressing wave spring thru reverse brake piston seat with hydraulic press (8) and special tool.

   NOTE:
   Don't compress wave spring more than necessary or it may get damaged.

   Special Tool
   (A): 09926-96040

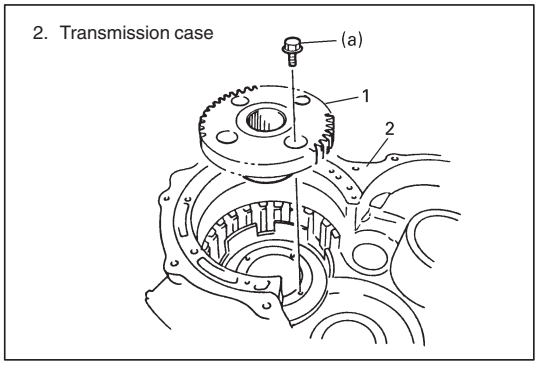

4) Install counter drive gear (1).

Tightening Torque
(a): 5.5 N·m (0.55 kg-m, 4.0 lb-ft)

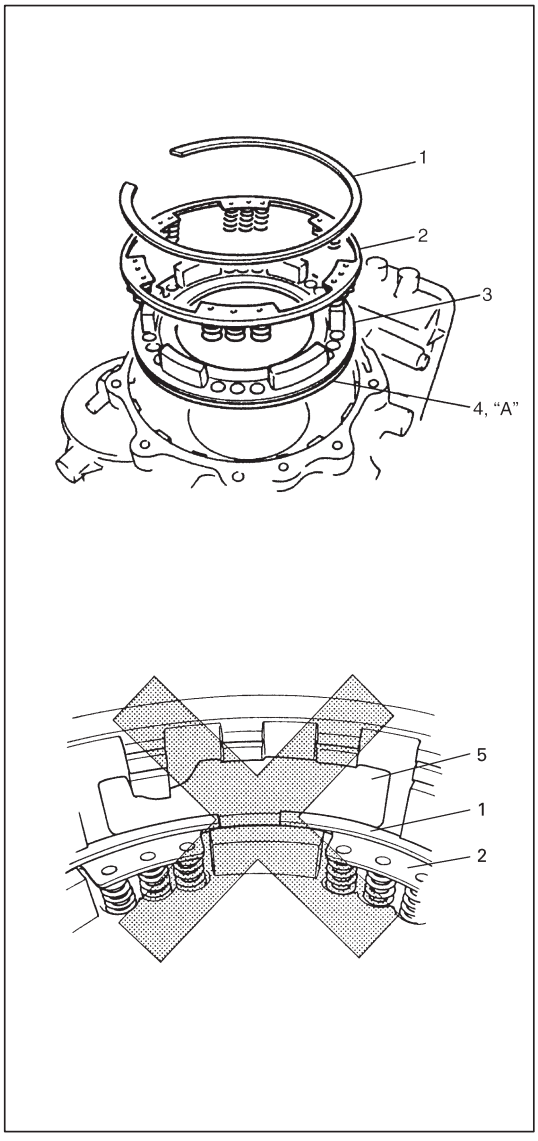

5) Install new inner and outer O-rings (4) to 1st & 2nd brake piston (3) and apply grease to them.

"A": Grease 99000-25030

6) Install 1st & 2nd brake piston (3) to transmission case, in such way that the side with spring holes comes to the top. Make sure that the O-rings are not twisted or caught.
7) Place 1st & 2nd brake piston return spring subass'y (2) on piston (3). Make sure that each spring fits the holes on the piston.
8) Push down return spring subass'y and install snap ring (1).

CAUTION:
Check that the opening of snap ring does not face the cored-hole (5) of the transmission case.

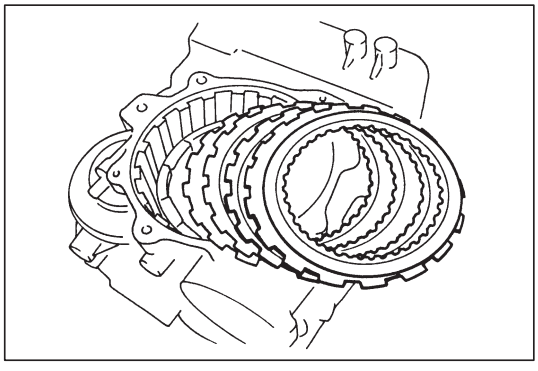

9) Install B1 brake discs and plates in following order.
(1) Plate → (2) Disc → (3) Plate → (4) Disc → (5) Plate → (6) Disc → (7) Plate → (8) Disc
10) Hold above parts with snap ring.

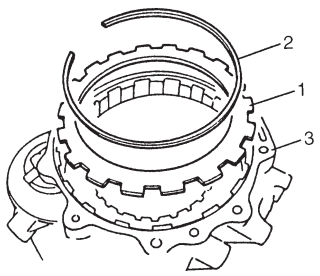

11) Install brake flange (1) and snap ring (2) to transmission case (3).

NOTE:
The flat surface of the flange comes to the top (must face B0 piston).

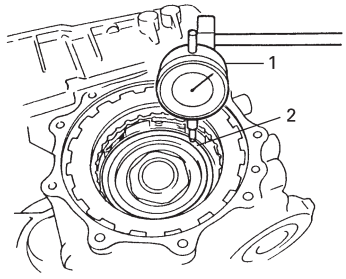

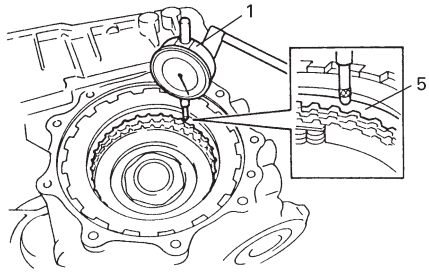

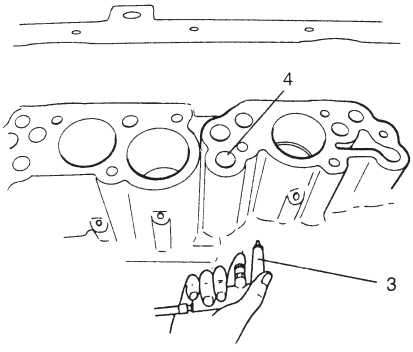

2. Tip of dial gauge on B1 brake piston
3. Air gun

12) Measure B1 brake stroke and clearance in following manner.

B1 Brake Stroke:
Set the dial gauge (1) to 1st & 2nd brake (B1 brake) piston as shown. Blow compressed air into hole (4) shown in figure. Then measure the difference as the compressed air is blown in.

Standard Value for B1 Brake Stroke = 1.79 – 2.01 mm (0.0705 – 0.0791 in.)

B1 Brake Clearance:
Set the dial gauge (1) on the top-most brake disc (5).
Blow compressed air into the hole (4) shown in figure.
Measure the difference. Call this value (A).

Standard Value for B1 Brake Clearance:
1.31 – 1.96 mm (0.0516 – 0.0772 in.)

If the measured value (s) is (are) out of specification, replace brake discs, plates and flange.

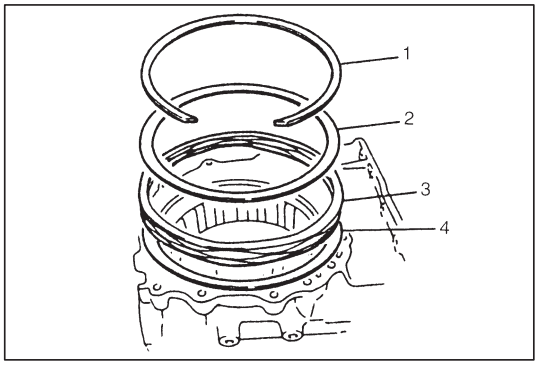

13) Install O/D (B0) brake return spring seat (4), return spring (3) and then retainer (2).
14) While compressing retainer (2), install snap ring (1).

CAUTION:
Position return spring (3) to be centered so that rear cover not be caught.

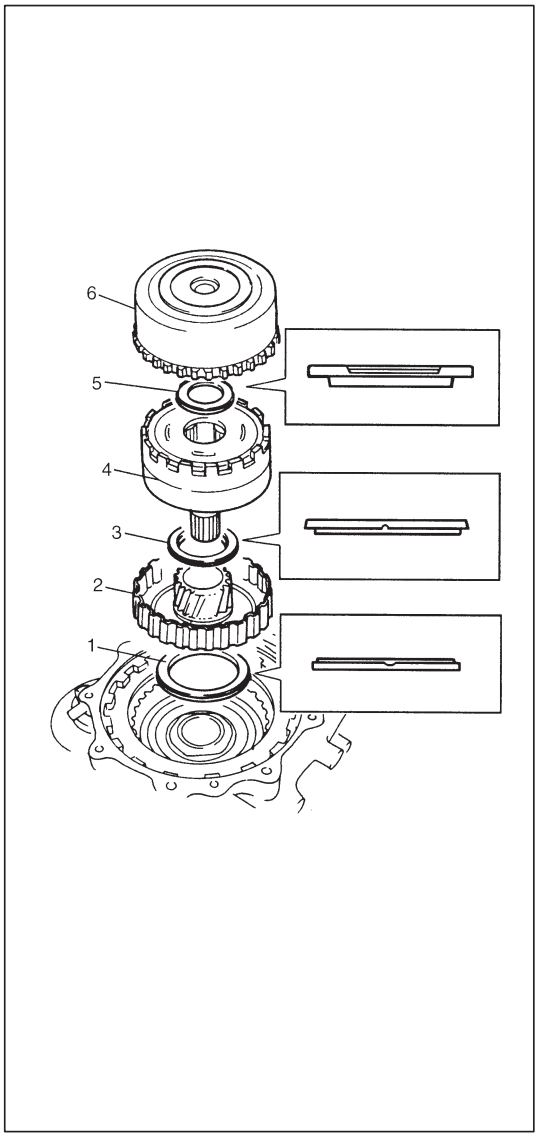

15) Install thrust needle roller bearing (1) and planetary sun gear No.2 (2). Turn planetary sun gear No.2 (2) right and left to match the brake discs and the spline of planetary sun gear No.2.
16) Install thrust needle roller bearing (3) and planetary set (4). Turn planetary set (4) right and left to match the gears of the planetary sun gear No.2 (2) and the gears of the planetary set (4).
17) Install thrust needle roller bearing (5) and planetary sun gear No.1 assembly (6). Turn planetary sun gear No.1 assembly (6) right and left to match the gears of planetary set (4) and the gears of planetary sun gear No.1 assembly (6).

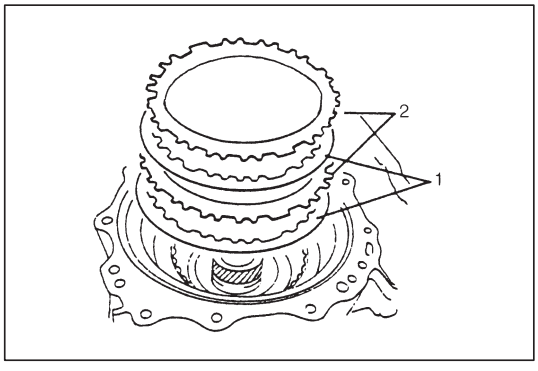

18) Install O/D brake (B0 brake) discs and plates.

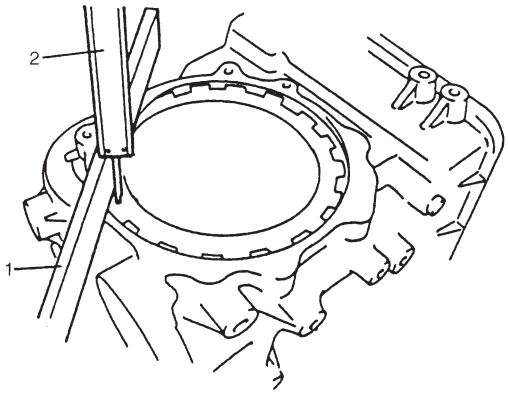

1. Straight edge
2. Vernier caliper

The value on vernier caliper – width of straight edge = (A)

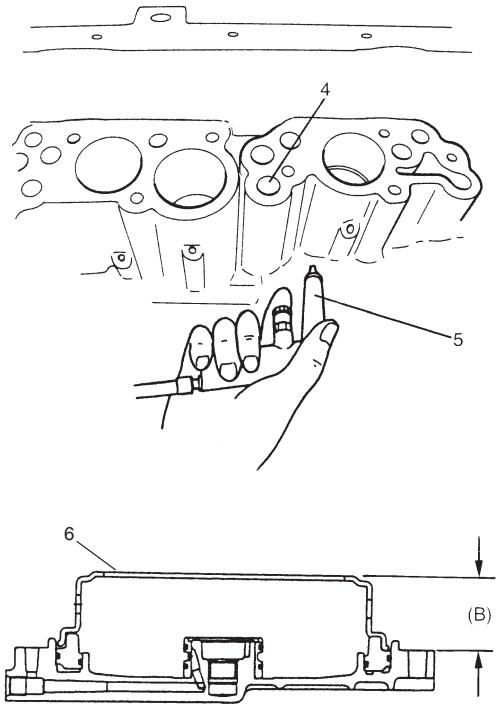

3. Rear cover assembly (with B0 piston)
5. Air gun
6. O/D brake piston adapter

19) Measure the clearance of B0 brake in the following manner.

Blow compressed air into hole shown in figure to activate B1 brake piston (4), then measure the distance between the top of B0 brake plate and the transmission case – rear cover mating surface.
Call this value (A).
Measure the distance from top of B0 piston adapter (on rear cover) to rear cover – transmission case mating surface. Call this value (B).
Clearance = (A) – (B) + 0.4

Standard Value for B0 Brake Clearance:
0.80 – 1.40 mm (0.0315 – 0.0551 in.)

If the obtained value is out of standard value, replace brake disc and plate.

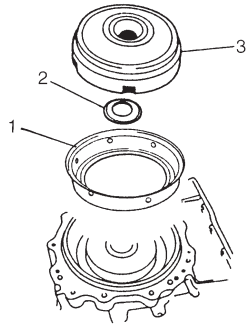

20) Install O/D brake piston adapter (1) thrust needle roller bearing (2) and direct (C0) clutch assembly (3).

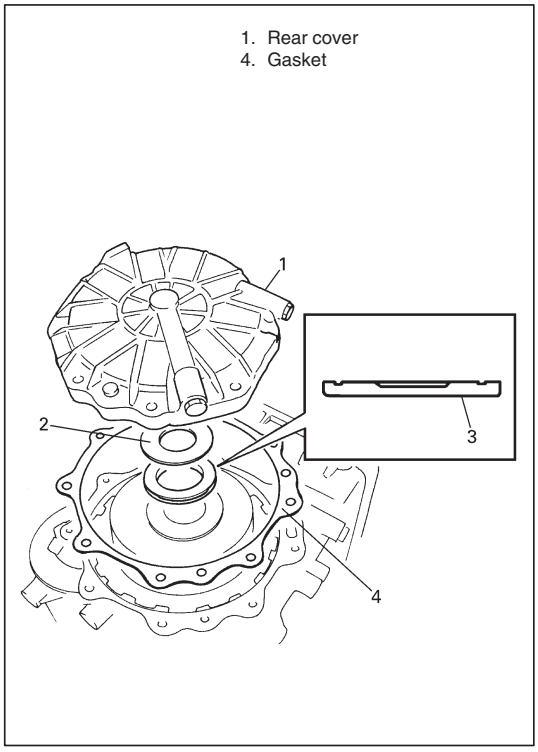

21) Install thrust needle roller bearing (3).
22) Install thrust washer (2).

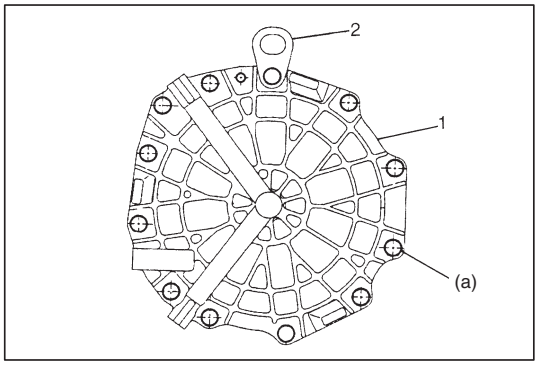

23) Install new gasket to transmission case and install rear cover (1).

Tightening Torque:
(a): 19 N·m (1.9 kg-m, 14.0 lb-ft)

NOTE:
Install the hook (2) to the location shown in figure.

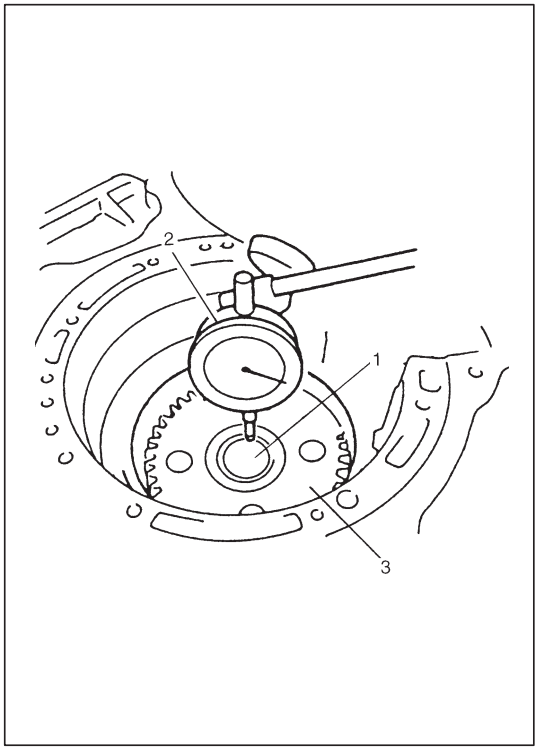

24) Measure clearance of thrust washer and rear cover in the following manner.
Measure the shaft and play of planetary set (1) with dial gauge (2).

NOTE:
Make sure that tip of dial gauge is not in contact with counter drive gear (3).

Standard Value for Clearance: 0.3 – 0.7 mm (0.012 – 0.028 in.)

If the obtained clearance is out of specification, select the thrust washer from table below and repeat above steps 22) – 24) to obtain the clearance within specification.

Available thrust washer (thickness)	1.9 mm (0.075 in.) 2.2 mm (0.087 in.) 2.5 mm (0.098 in.) 2.8 mm (0.110 in.)

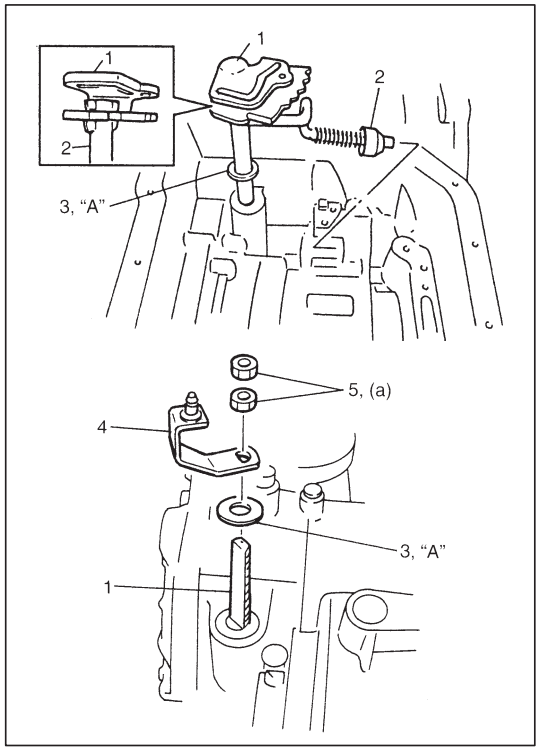

25) Attach parking lock rod (2) to manual shift shaft (1).
26) Install manual shift shaft and washer (3) to transmission case. Fix manual shift shaft with washer, control shift lever (4) and two nuts (5).
Apply grease to the washers.

Tightening Torque:
(a): 30 N·m (3.0 kg-m, 22.0 lb-ft)

“A”: Grease 99000-25030

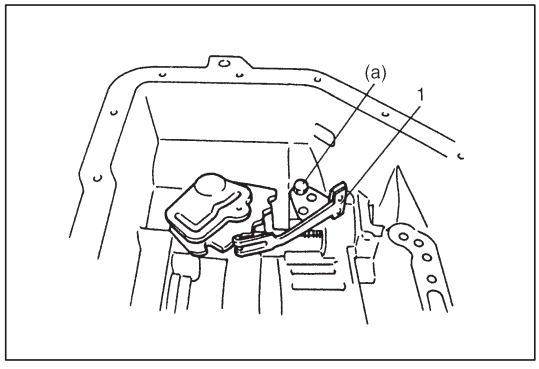

27) Install detent spring (1) to transmission case.

Tightening Torque:
(a): 11 N·m (1.1 kg-m, 8.0 lb-ft)

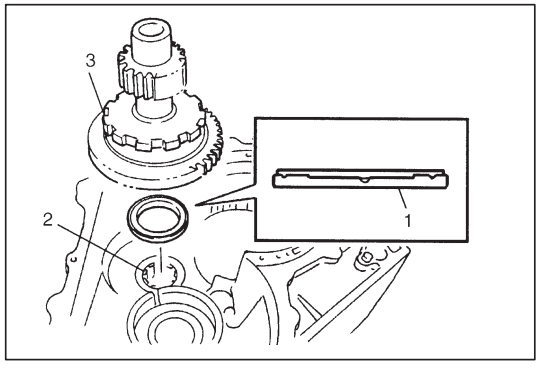

28) Install thrust needle roller bearing (2) on counter bearing (3).
29) Install counter driven gear (1).

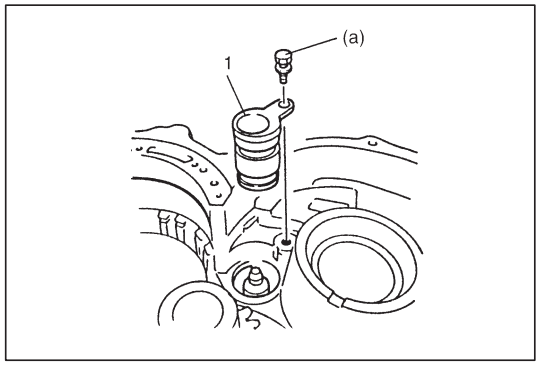

30) Install parking lock pawl sleeve (1) and oil plate (not shown in figure).

Tightening Torque:
(a): 19 N·m (1.9 kg-m, 14.0 lb-ft)

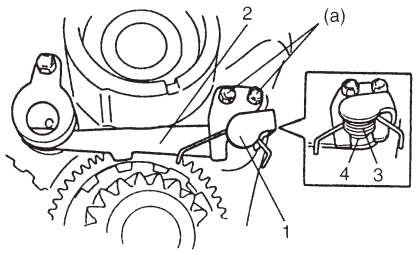

1. Parking lock pawl cover

31) Install parking lock pawl (2).
32) Install parking lock pawl shaft (4), torsional spring (3), and cover, then hold them with 2 bolts.

Tightening Torque:
(a): 11 N·m (1.1 kg-m, 8.0 lb-ft)

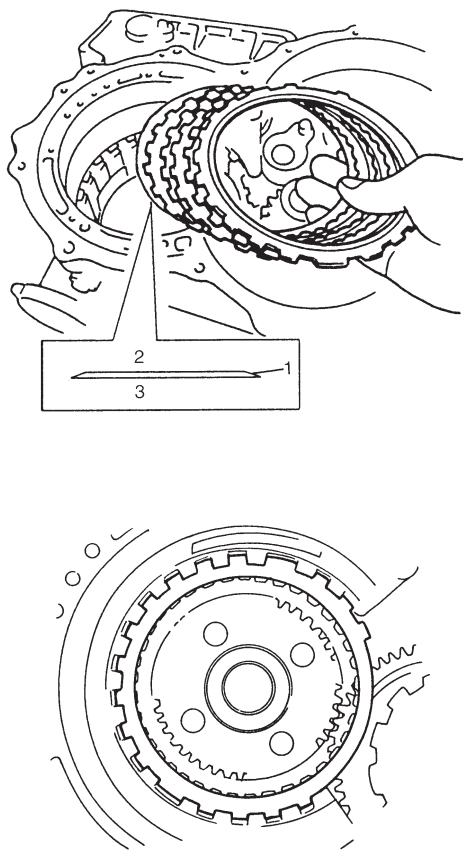

2. Brake plate side
3. Transmission case side

33) Install B2 brake plates, discs, flange and cushion plate in following order:
(1) Cushion plate → (2) Plate → (3) Disc → (4) Plate → (5) Disc → (6) Plate → (7) Disc → (8) Plate → (9) Disc → (10) Flange

NOTE:
- **Note the direction of cushion plate (1).**
- **Make sure that the plates are fitted into groove of transmission case as shown in figure.**

34) Hold above parts with snap ring.

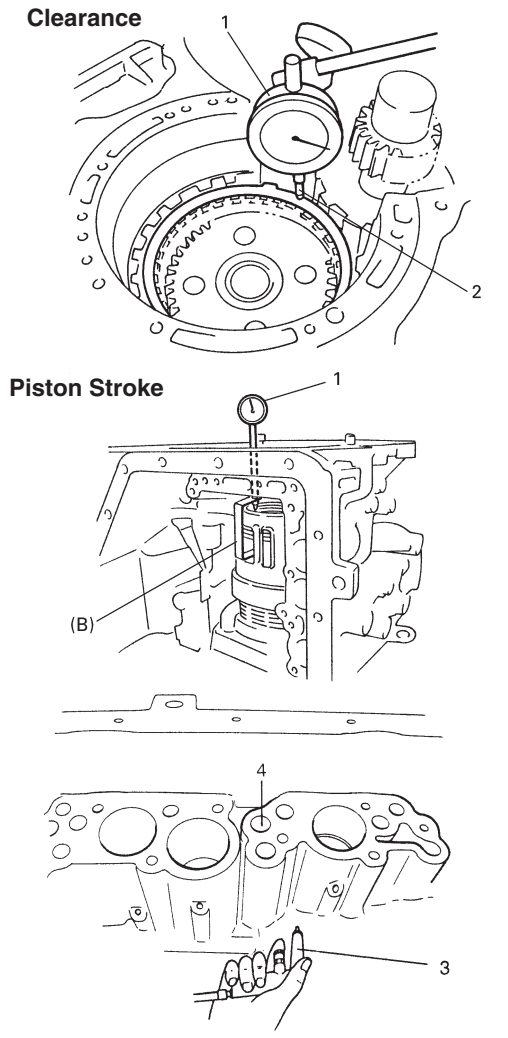

2. Tip of dial gauge on the top of B2 brake flange
3. Air gun

35) Inspect B2 brake piston stroke and clearance by blowing compressed air into hole (4) shown in figure.
Make sure that the obtained piston stroke and clearance satisfy the standard value.

To Measure Clearance:
Set dial gauge (1) to the top of B2 brake flange and blow compressed air into the hole shown in figure.

To Measure Piston Stroke:
Set special tool (B) on the tip of dial gauge and place the other end of special tool on the claw of B2 brake piston. Blow compressed air into the hole (4) shown in figure and measure the value for piston stroke.

Special Tool
(B) : 09952-06020

Standard Values for
Clearance : 0.79 – 1.69 mm (0.031 – 0.067 in.)
Piston stroke : 1.77 – 2.59 mm (0.070 – 0.102 in.)

NOTE:
If clearance and/or piston stroke is out of specification, disassemble B2 brake discs and plates, reinstall them to satisfy the measured values to standard value.

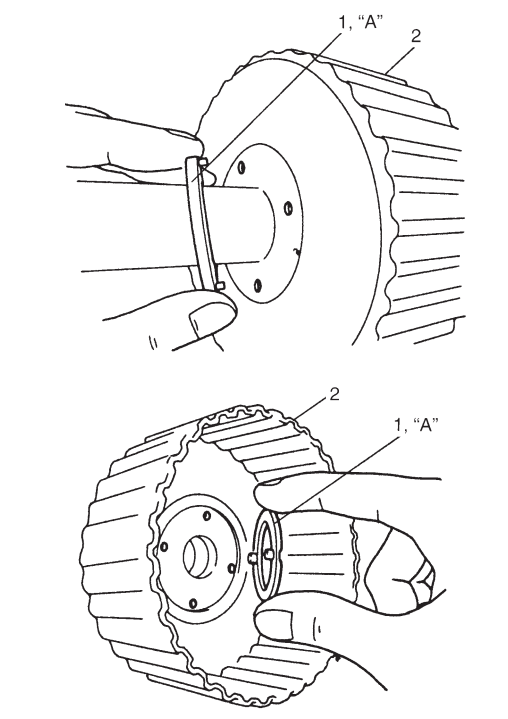

36) Apply grease to thrust washers (1) and install them to follow shaft (2).

NOTE:
When installing thrust washers, make sure that the protrusions of thrust washer do not interfere with the ones of the other side.

"A": Grease 99000-25030

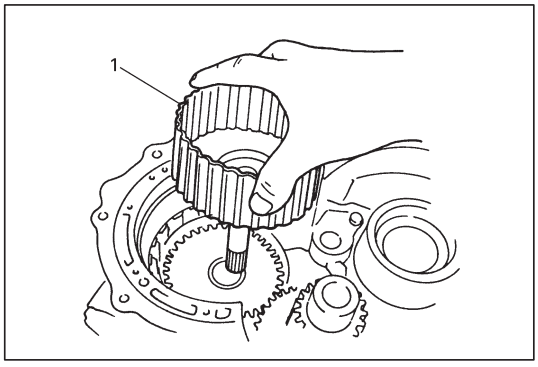

37) Install follow shaft (1) to transmission case.
Turn it right and left to match the B2 brake discs and the spline of follow shaft.

NOTE:
When installing follow shaft, do not let the thrust washer fall off from follow shaft.

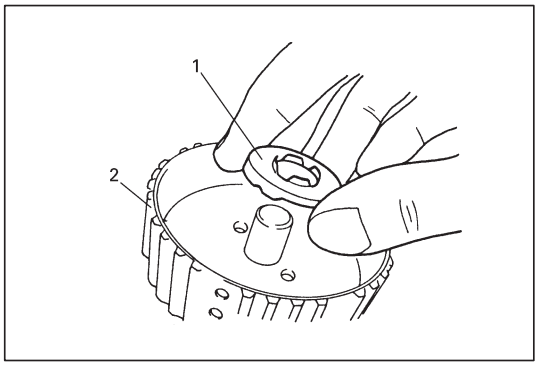

38) Install thrust needle roller bearing (1) to intermediate shaft (2).

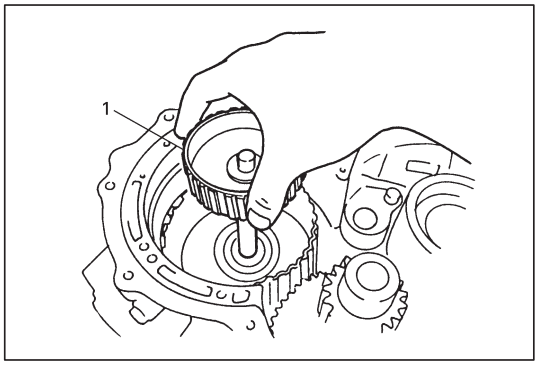

39) Install intermediate shaft (1) to transmission case.

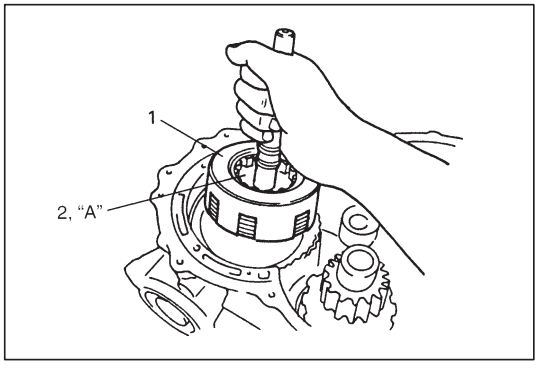

40) Install rear disc clutch assembly (1) by turning it right and left to match the clutch disc of rear disc clutch ass'y and the spline of intermediate shaft.
41) Install thrust bearing race (2).

"A": Grease 99000-25030

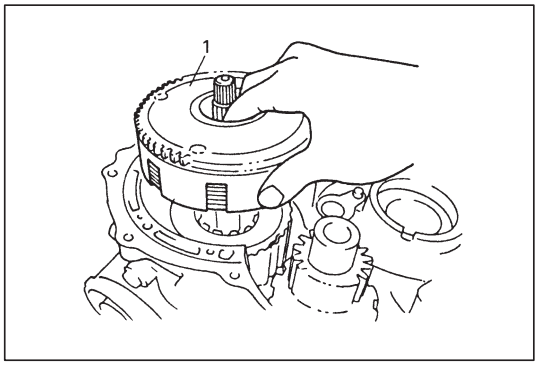

42) Install front disc clutch assembly (1) by turning it right and left to match the clutch disc of front disc clutch ass'y and the spline of follow shaft.

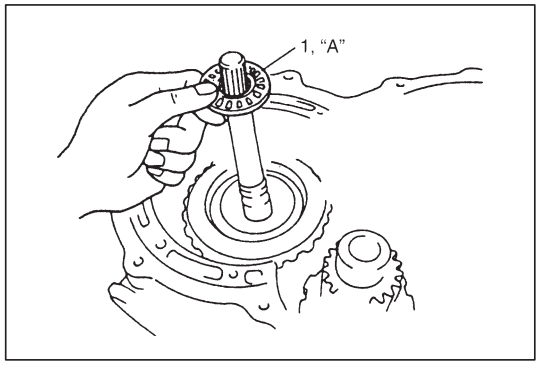

43) Apply grease to thrust needle roller bearing (1) and install it.

“A”: Grease 99000-25030

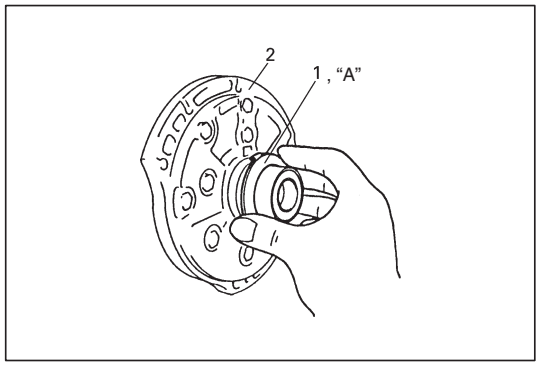

44) Apply grease to clutch drum thrust washer (1) and install it to oil pump ass’y (2).

“A”: Grease 99000-25030

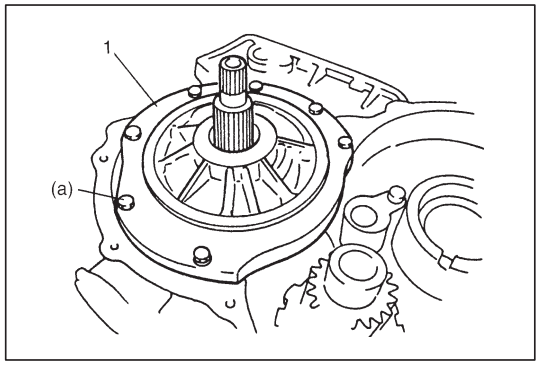

45) Install gasket to transmission case and install oil pump assembly (1) to transmission case.

Tightening Torque:
(a): 12 N·m (1.2 kg-m, 9.0 lb-ft)

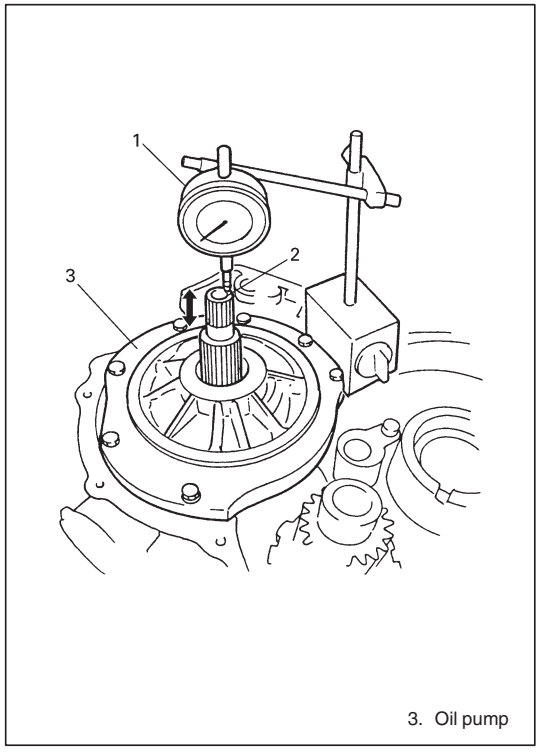

46) Measure input shaft end (2) play.
Set dial gauge (1) as shown in figure and measure the play of the input shaft.

Standard Value of Input Shaft End Play:
0.3 – 0.9 mm (0.012 – 0.036 in.)

If the obtained value is out of standard value, select thrust bearing race (installed in step 41)) of different thickness shown in table below and adjust the play.

Available Thrust Bearing Race Size (thickness)	1.3 mm (0.051 in.)
	1.7 mm (0.067 in.)
	2.1 mm (0.083 in.)

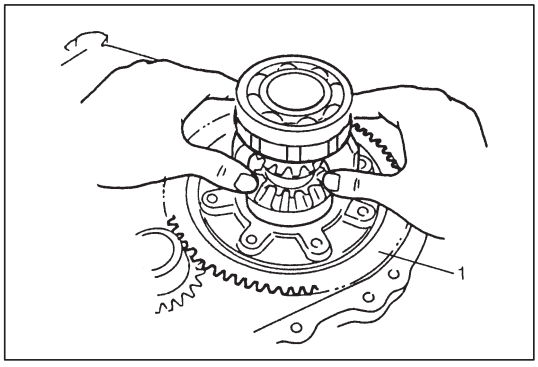

47) Install differential gear assembly (1).

NOTE:
Grease can be applied around the R and L bearing of differential gear assembly to ease fitting to the transmission case and torque converter housing.

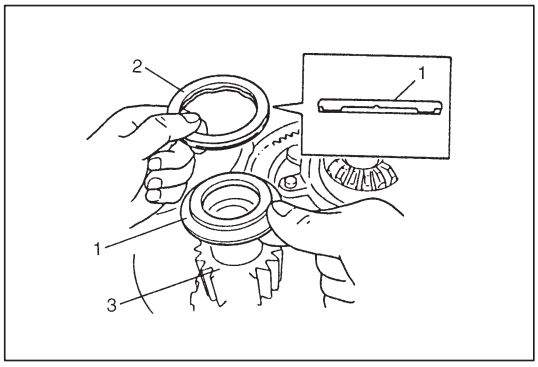

48) Install thrust bearing race (1) and thrust needle roller bearing (2) to the top of counter driven gear (3).

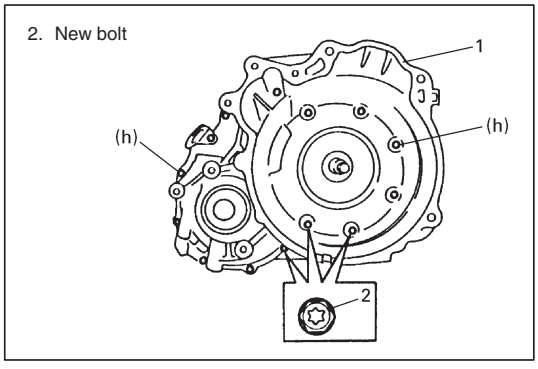

49) Apply grease to oil pump D-ring.
Install new gasket to transmission case and install torque converter housing (1).

Tightening Torque:
(h): 19 N·m (1.9 kg-m, 14.0 lb-ft)

Grease: 99000-25030

NOTE:
Apply thread lock to the three bolts shown in figure.

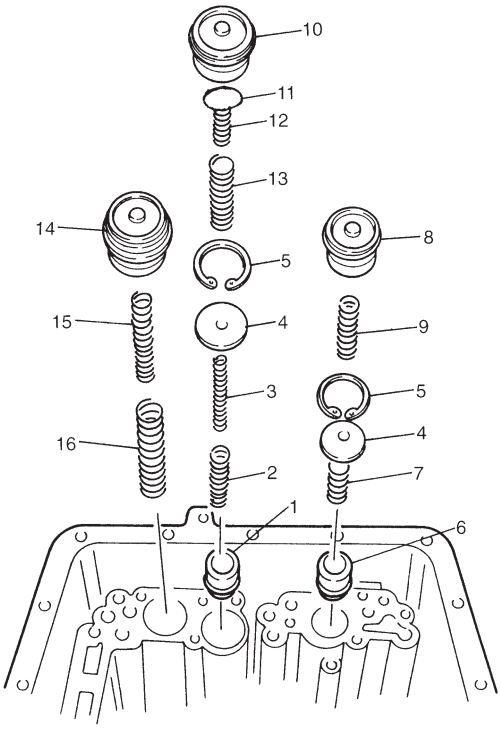

1. C1 accumulator piston
2. C1 accumulator outer spring (with Yellow paint)
3. C1 accumulator inner spring (with Yellow paint)
4. Spacer
5. Snap ring
6. B0 accumulator piston
7. B0 accumulator spring (with Purple paint)
8. C0 accumulator piston
9. C0 accumulator spring (with Pink point)
10. B1 accumulator piston
11. B1 accumulator spacer
12. B1 accumulator inner spring (with Orange paint)
13. B1 accumulator outer spring (with Orange paint)
14. C2 accumulator piston
15. C2 accumulator inner spring (with Light Blue paint)
16. C2 accumulator outer spring (with Light Blue paint)

50) Install O-rings to each accumulator piston and apply grease or ATF to them.

Grease 99000-25030

NOTE:
C1 and B0 accumulator pistons are the same.

51) Install C1 and B0 accumulator pistons (1 and 6), springs (2, 3 and 7) and spacers (4).
Hold them with snap rings (5).

NOTE:
- **Make sure that snap rings are fitted to the groove of each cylinder.**
- **Make sure that O-rings are not twisted or caught when installing.**

52) Install C0, B1, C2 accumulator springs (9, 12, 13, 15 and 16), spacer (11) and pistons (8, 10 and 14) as shown in figure.

NOTE:
Make sure that O-rings are not twisted or caught when installing.

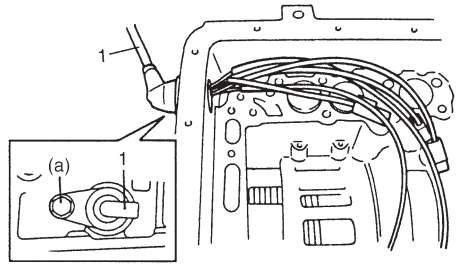

53) Install wire-to-solenoid assembly (1).

NOTE:
Apply grease to O-ring of wire-to-solenoid ass'y.

Tightening Torque:
(a): 8 N·m (0.8 kg-m, 6.0 lb-ft)

Grease 99000-25030

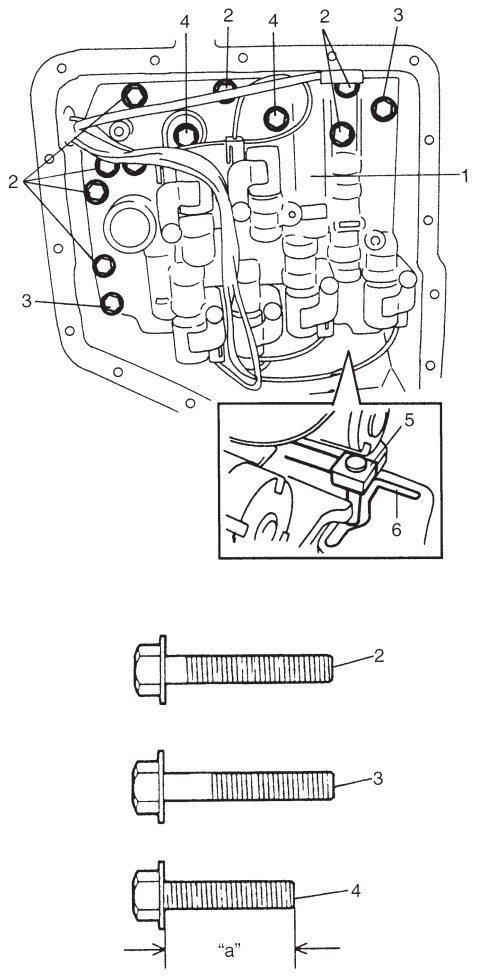

1. Valve body assembly
2. Bolt A
3. Bolt B
4. Bolt C
5. Manual valve pin
6. Slot of manual shift shaft

54) Install valve body to transmission case.
First match the pin of the manual valve to the slot of the manual shift shaft.
To fix valve body to transmission case, first tighten bolt B (3), then tighten other bolts.

Tightening Torque for Valve Body Bolt
10 N·m (1.0 kg-m, 7.5 lb-ft)

Bolt	Length "a"	Pieces
A	30 mm (1.20 in.)	7
B	31 mm (1.22 in.)	2
C	25 mm (0.98 in.)	2

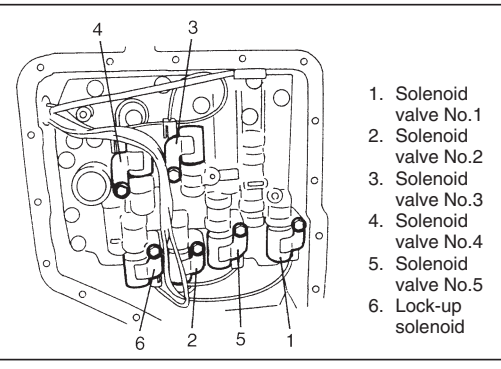

1. Solenoid valve No.1
2. Solenoid valve No.2
3. Solenoid valve No.3
4. Solenoid valve No.4
5. Solenoid valve No.5
6. Lock-up solenoid

55) Connect couplers of wire-to-solenoid to solenoid valves.

Solenoid Valve	Wire Color
1	White
2	Black
3	Red
4	Yellow
5	Brown
Lock-up	Orange

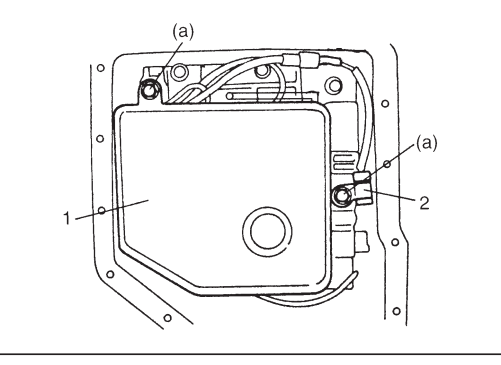

56) Install O-ring to oil strainer ass'y (1). Make sure that O-ring is not twisted.
57) Install oil strainer ass'y to the top of valve body ass'y.
Connect A/T fluid temperature sensor (2) coupler.
Fix A/T fluid temperature sensor and oil strainer ass'y with bolts.

Tightening Torque:
(a): 10 N·m (1.0 kg-m, 7.5 lb-ft)

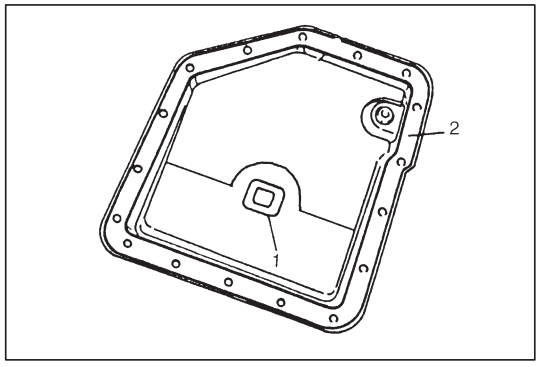

58) Install magnet (1) in oil pan (2).

NOTE:
If metal particles are attached to the magnet, clean them before installing.

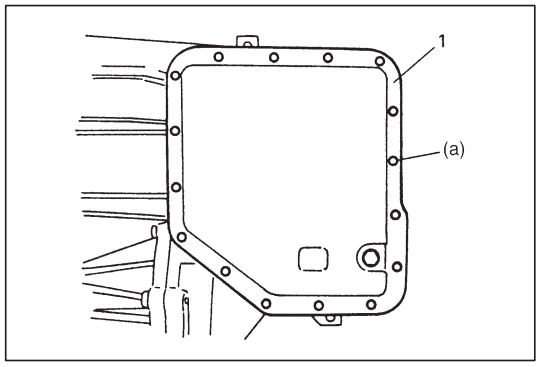

59) Install gasket to transmission case and install oil pan (1).

Tightening Torque:
(a): 7.5 N·m (0.75 kg-m, 5.5 lb-ft)

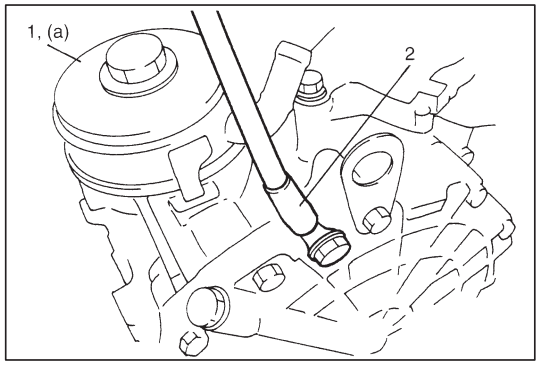

60) Install oil cooler (1) and ground cable (2).

Tightening Torque:
(a): 60 N·m (6.0 kg-m, 43.5 lb-ft)

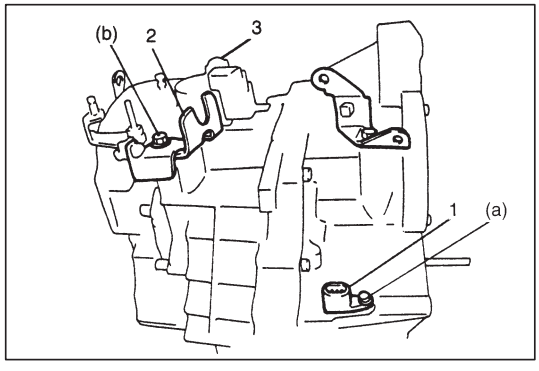

61) Install vehicle speed sensor (for speedometer) (1), shift cable bracket (2) and connector clamp bracket (3).

Tightening Torque:
(a): 5.5 N·m (0.55 kg-m, 4.0 lb-ft)
(b): 13 N·m (1.3 kg-m, 9.5 lb-ft)

Tightening Torque for Connector Clamp Bracket
8 N·m (0.8 kg-m, 6.0 lb-ft)

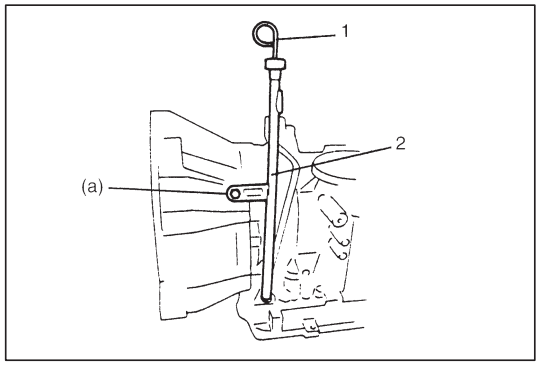

62) Install A/T fluid filler tube (2) and level gauge (1).

Tightening Torque:
(a): 19.5 N·m (1.95 kg-m, 14.5 lb-ft)

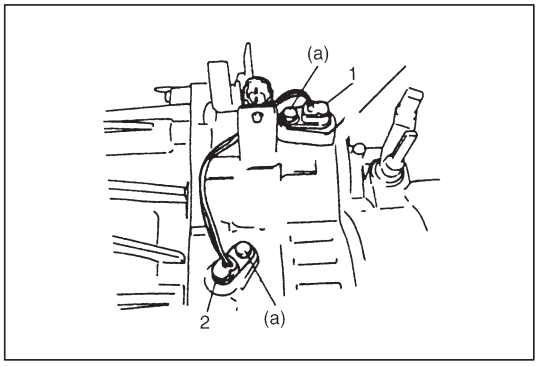

63) Install A/T VSS (1) and input revolution sensor (2).
Apply grease to O-ring of each sensor.

Tightening Torque:
(a): 8 N·m (0.8 kg-m, 6.0 lb-ft)

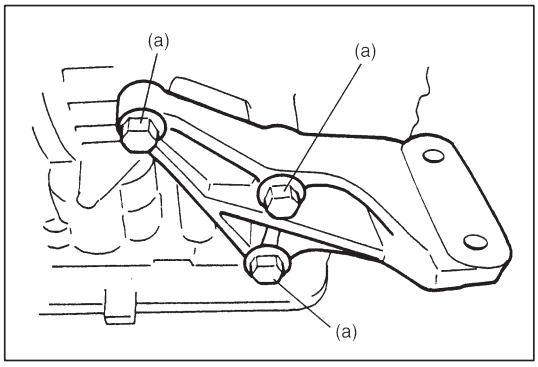

64) Install engine mounting LH bracket.

Tightening Torque:
(a): 55 N·m (5.5 kg-m, 40.0 lb-ft)

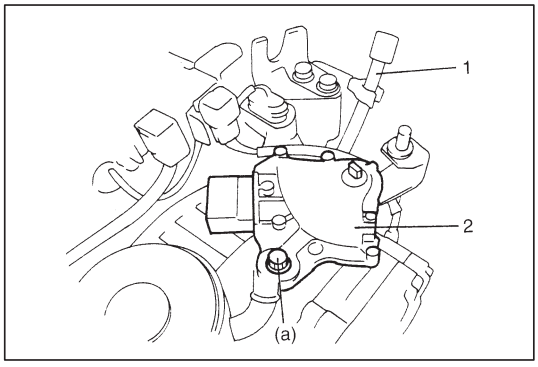

65) Install breather hose (1).
66) Install shift switch (2).
Install it temporarily so that the adjustment can be done after installing A/T ass'y back to the vehicle.

Tightening Torque:
(a): 18 N·m (1.8 kg-m, 13.0 lb-ft)

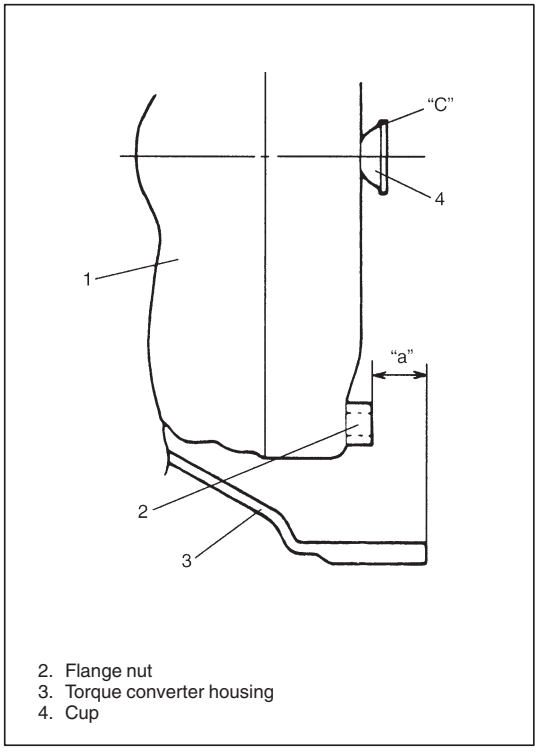

2. Flange nut
3. Torque converter housing
4. Cup

67) Install torque converter (1) to input shaft.
- Install torque converter, using care not to damage oil seal of oil pump.
- After installing torque converter, check to make sure that distance "a" is within specification.

Distance "a": More than 20.9 mm (0.823 in.)

- Check torque converter for smooth rotation.
- Apply grease around cup at the center of torque converter.

"C": Grease 99000-25010

CAUTION:
- **Before installing converter, make sure that its pump hub portion is free from nicks, burrs or damage which may cause oil seal to leak.**
- **Be very careful not to drop converter on oil pump gear. Damage in gear, should it occur, may cause a critical trouble.**

SPECIAL TOOLS

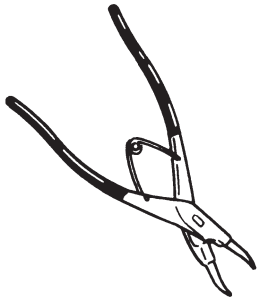 09900-06108 Snap ring plier (Closing type)	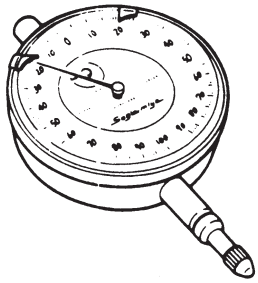 09900-20606 Dial gauge	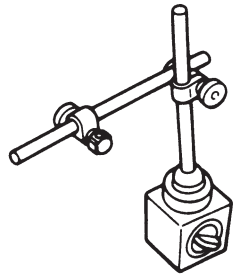 09900-20701 Magnetic stand	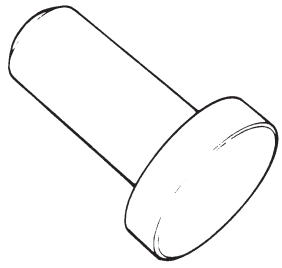 09913-75510 Bearing installer
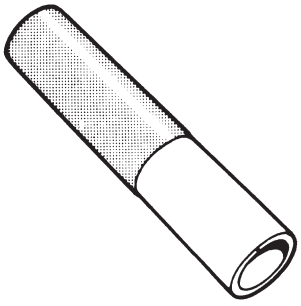 09913-80112 Bearing installer	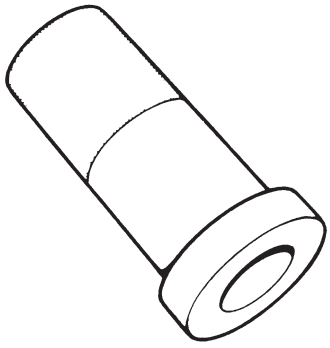 09913-85210 Bearing installer	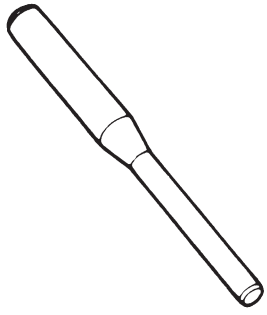 09922-85811 Spring pin remover (6 mm)	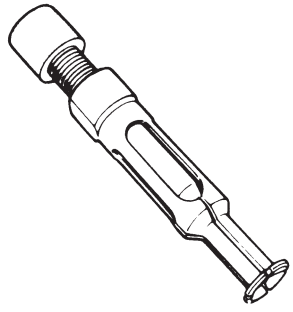 09923-74510 Bearing remover
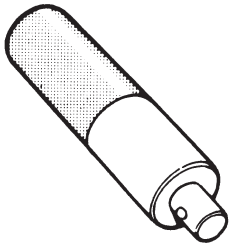 09924-74510 Installer handle	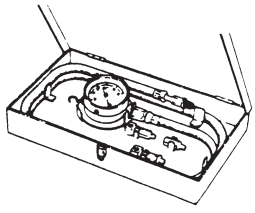 09925-37810 Oil pressure gauge	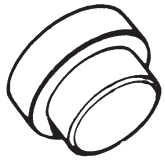 09925-88210 Bearing puller attachment	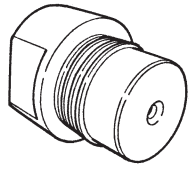 09926-26030 Air installer No.1
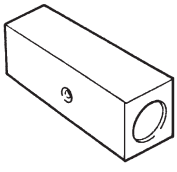 09926-26040 Air installer No.2	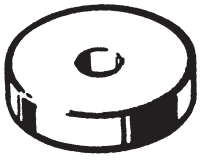 09926-68310 Bearing installer	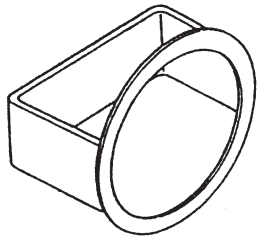 09926-96010 Clutch spring compressor	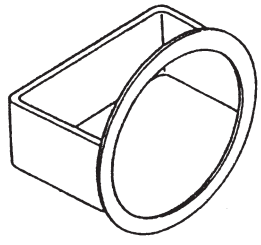 09926-96020 Clutch spring compressor

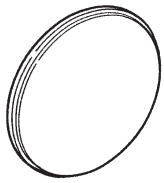 09926-96030 Clutch spring compressor No.7	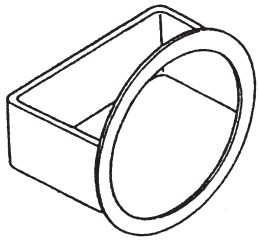 09926-96040 Clutch spring compressor No.8	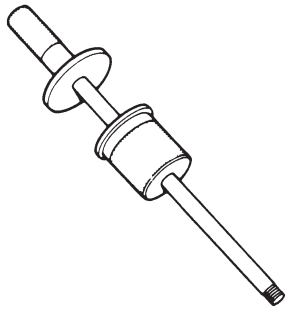 09930-30102 Sliding shaft	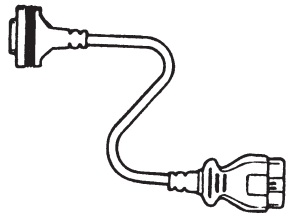 09931-76030 16/14 pin DLC adapter
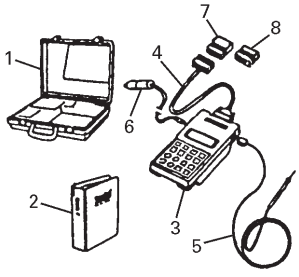 1. Storage case 2. Operator's manual 3. Tech-1A 4. DLC cable 5. Test lead/probe 6. Power source cable 7. DLC cable adaptor 8. Self-test adaptor 09931-76011 SUZUKI scan tool (Tech 1A) kit		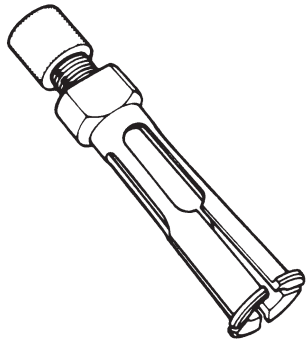 09941-64511 Bearing remover	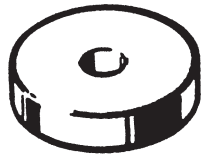 09944-68510 Bearing installer
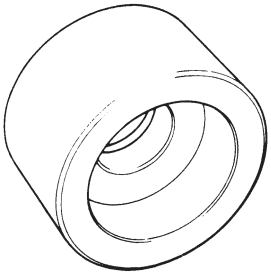 09951-16060 Bush remover	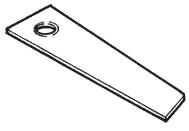 09952-06010 Dial gauge plate No.1	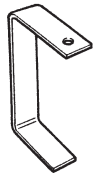 09952-06020 Dial gauge plate No.2	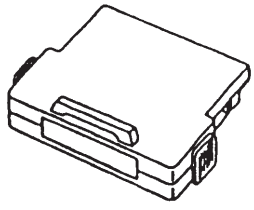 Mass storage cartridge
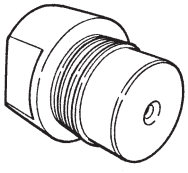 09926-26050 Air installer No.3			

REQUIRED SERVICE MATERIALS

MATERIALS	RECOMMENDED SUZUKI PRODUCT	USE
Automatic transmission fluid	An equivalent of DEXRON®-III or DEXRON®-IIE	● Automatic transmission ● Parts lubrication when installing
Sealant	SUZUKI BOND NO.1215 (99000-31110)	● Case housing star-shaped recess bolts (3 pcs only)
Lithium grease	SUZUKI SUPER GREASE C (99000-25030)	● Retaining parts in place when assembling ● Oil seal lips ● Oil pump D-ring
	SUZUKI SUPER GREASE A (99000-25010)	● Cable ends ● Converter center cup

SECTION 7C

CLUTCH

WARNING:
For vehicles equipped with Supplemental Restraint (Air Bag) System:

- **Service on and around the air bag system components or wiring must be performed only by an authorized SUZUKI dealer. Refer to "Air Bag System Components and Wiring Location View" under "General Description" in air bag system section in order to confirm whether you are performing service on or near the air bag system components or wiring. Please observe all WARNINGS and "Service Precautions" under "On-Vehicle Service" in air bag system section before performing service on or around the air bag system components or wiring. Failure to follow WARNINGS could result in unintentional activation of the system or could render the system inoperative. Either of these two conditions may result in severe injury.**
- **Technical service work must be started at least 90 seconds after the ignition switch is turned to the "LOCK" position and the negative cable is disconnected from the battery. Otherwise, the system may be activated by reserve energy in the Sensing and Diagnostic Module (SDM).**

CONTENTS

GENERAL DESCRIPTION

The clutch is a diaphragm-spring clutch of a dry single disc type. The diaphragm spring is of a tapering-finger type, which is a solid ring in the outer diameter part, with a series of tapered fingers pointing inward.
The disc, carrying four torsional coil springs, is positioned on the transmission input shaft with an involute spline fit.
The clutch cover is secured to the flywheel, and carries the diaphragm spring in such a way that the peripheral edge part of the spring pushes on the pressure plate against the flywheel (with the disc in between), when the clutch release bearing is held back. This is the engaged condition of the clutch.

Depressing the clutch pedal causes the release bearing to advance and pushes on the tips of the tapered fingers of the diaphragm spring. When this happens, the diaphragm spring pulls the pressure plate away from the flywheel, thereby interrupting the flow of drive from flywheel through clutch disc to transmission input shaft.

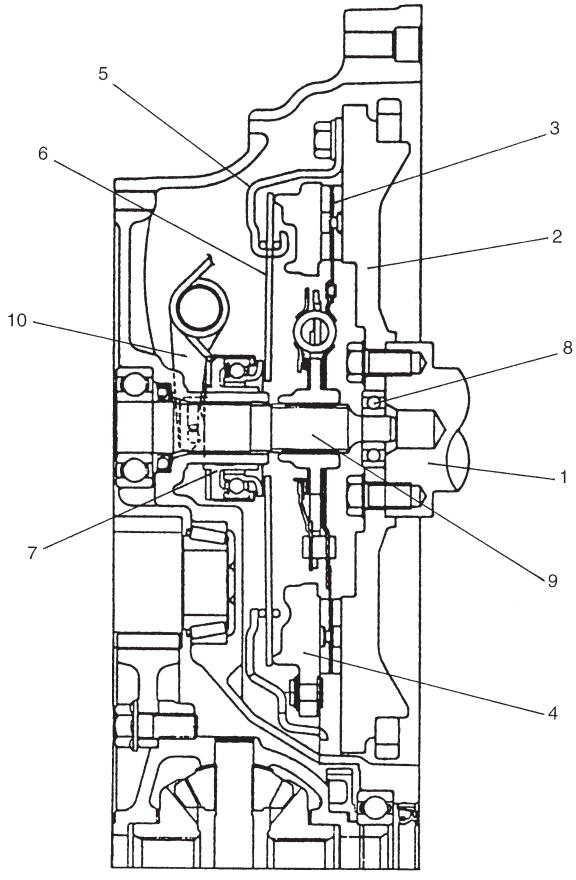

1. Crankshaft
2. Flywheel
3. Clutch disc
4. Pressure plate
5. Clutch cover
6. Diaphragm spring
7. Release bearing
8. Input shaft bearing
9. Input shaft
10. Release shaft

DIAGNOSIS

Condition	Possible Cause	Correction
Slipping	● Improper clutch pedal free travel. ● Worn or oily clutch disc facing. ● Warped disc, pressure plate or flywheel surface. ● Weakened diaphragm spring. ● Rusted clutch cable.	Adjust free travel. Replace disc. Replace disc, clutch cover or flywheel. Replace clutch cover. Replace cable.
Dragging clutch	● Improper clutch pedal free travel. ● Weakened diaphragm spring, or worn spring tip. ● Rusted input shaft splines. ● Damaged or worn splines of transmission input shaft. ● Excessively wobbly clutch disc. ● Clutch facings broken or dirty with oil.	Adjust free travel. Replace clutch cover. Lubricate. Replace input shaft. Replace disc. Replace disc.
Clutch vibration	● Glazed (glass-like) clutch facings. ● Clutch facings dirty with oil. ● Release bearing slides unsmoothly on input shaft bearing retainer. ● Wobbly clutch disc, or poor facing contact. ● Weakened torsion springs in clutch disc. ● Clutch disc rivets loose. ● Distorted pressure plate or flywheel surface. ● Weakened engine mounting or loosened engine mounting bolt or nut.	Repair or replace disc. Replace disc. Lubricate or replace input shaft bearing retainer. Replace disc. Replace disc. Replace disc. Replace clutch cover or flywheel. Retighten or replace mounting.
Noisy clutch	● Worn or broken release bearing. ● Input shaft front bearing worn down. ● Excessive rattle of clutch disc hub. ● Cracked clutch disc. ● Pressure plate and diaphragm spring rattling.	Replace release bearing. Replace input shaft bearing. Replace disc. Replace disc. Replace clutch cover.
Grabbing clutch	● Clutch disc facings soaked with oil. ● Clutch disc facings excessively worn. ● Rivet heads showing out of facing. ● Weakened torsion springs.	Replace disc. Replace disc. Replace disc. Replace disc.

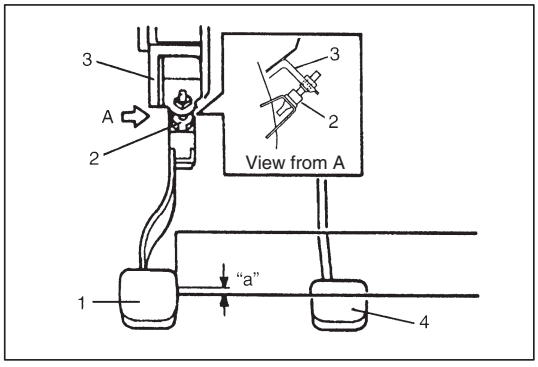

CLUTCH PEDAL HEIGHT CHECK

Adjust clutch pedal (1) height with adjusting bolt (2) located on pedal bracket (3) so that clutch pedal height is same as brake pedal (4) height.

Height difference "a": 0 mm (0 in.)

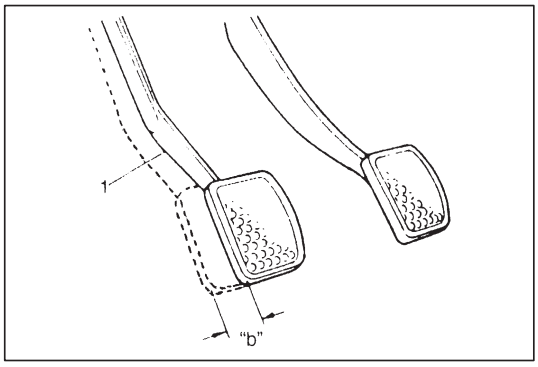

CLUTCH PEDAL FREE TRAVEL CHECK

1) Confirm that clutch pedal height is specification.
2) Depress clutch pedal (1), stop the moment clutch resistance is felt, and measure distance (clutch pedal free travel). Free travel should be within the following specification.

   Pedal free travel "b": 15 – 20 mm (0.6 – 0.8 in.)

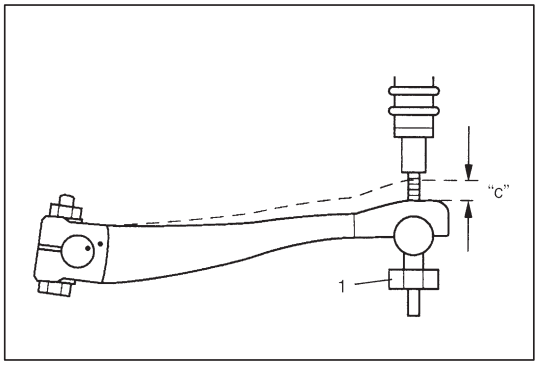

3) If free travel is out of specification, adjust it with cable joint nut (1).

   Release lever free travel "c": 0 – 2 mm (0 – 0.08 in.)

4) After checking clutch pedal free travel, also check clutch for proper function with engine running.

ON-VEHICLE SERVICE

CLUTCH CABLE

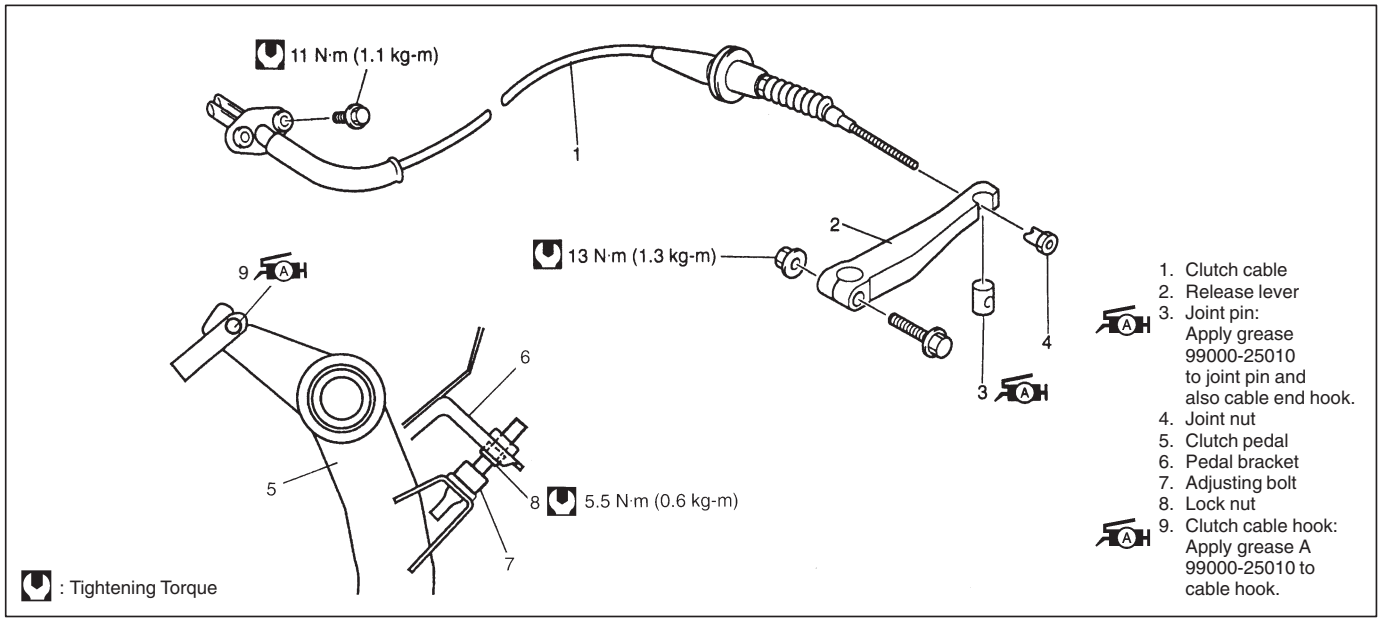

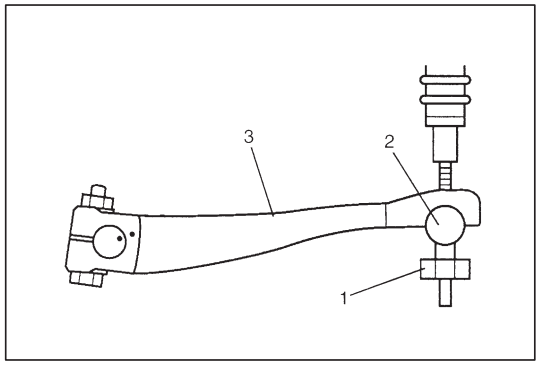

REMOVAL

1) Disconnect negative cable at battery.
2) Remove clutch cable joint nut (1).
3) Remove joint pin (2) from clutch release lever (3).

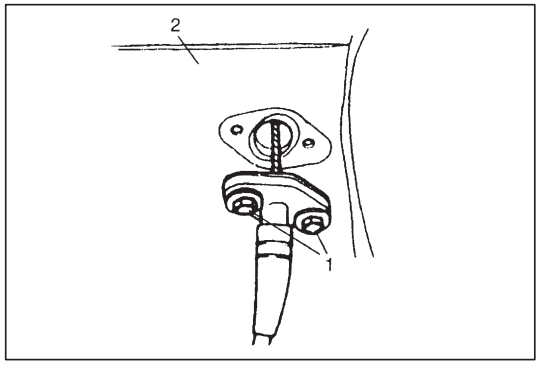

4) Remove clutch cable outer bolts (1) at dash panel (2) in engine room.
5) Disconnect cable hook from clutch pedal, then take off cable.

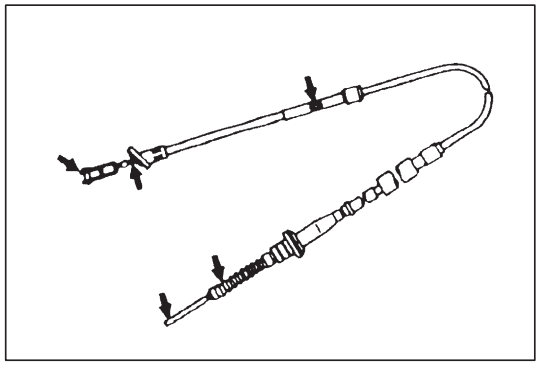

INSPECTION

Inspect clutch cable and replace it for any of the following conditions.

- Excessive cable friction
- Frayed cable
- Bent or kinked cable
- Broken boots
- Worn end

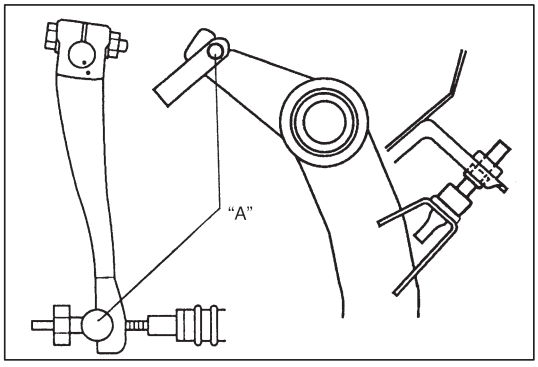

INSTALLATION

1) Apply grease to cable end hook and also joint pin before installing cable.

   "A": Grease A, 99000-25010

2) Hook cable end with pedal by using screwdriver or long nose pliers from cabin inside, then join inner cable wire joint pin in release lever.

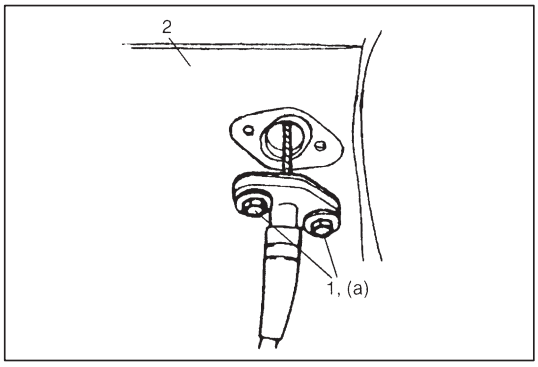

3) Fasten cable with 2 bolts (1) to dash panel (2).

   Tightening Torque
   (a): 11 N·m (1.1 kg-m, 8.0 lb-ft)

4) Screw in joint nut and adjust free travel of pedal to specification by turning nut.
5) Check clutch for proper function with engine running.

CLUTCH PEDAL AND CLUTCH PEDAL BRACKET

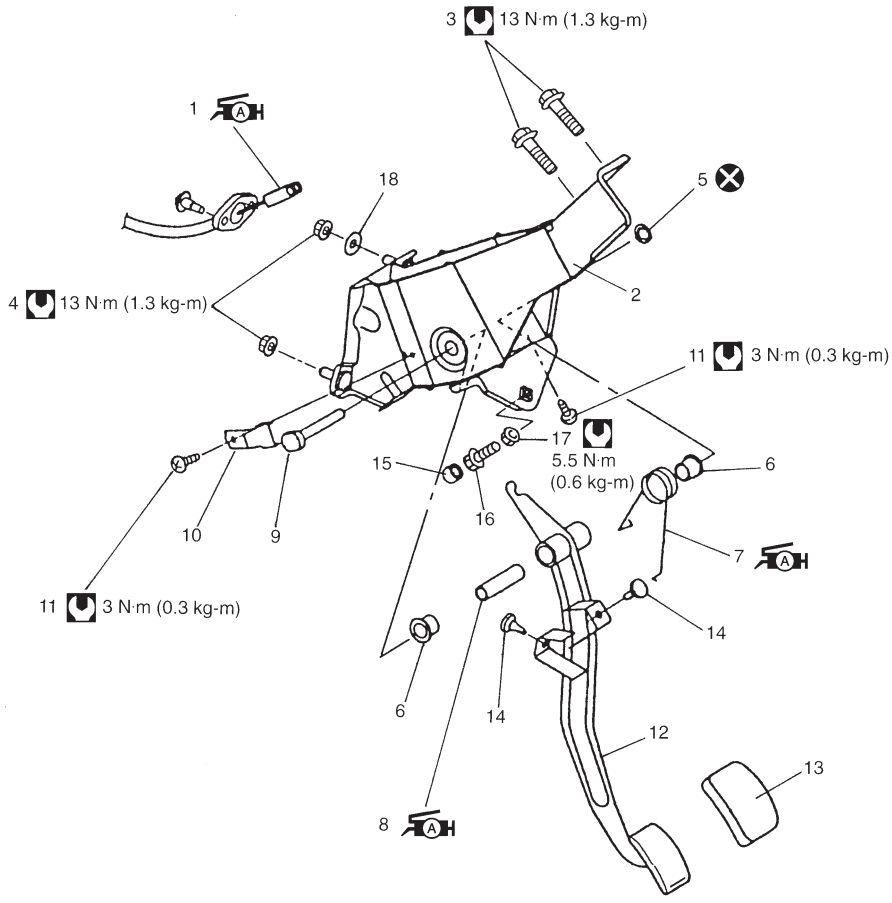

1. Clutch cable hook: Apply grease A 99000-25010 to cable hook.
2. Clutch pedal bracket
3. Bolt
4. Nut
5. Pedal shaft nut
6. Pedal bush
7. Pedal spring: Apply grease A 99000-25010 to inside surface of spring.
8. Pedal shaft spacer: Apply grease A 99000-25010 to outside surface of spacer.
9. Pedal shaft
10. Pedal shaft stopper
11. Screw
12. Clutch pedal
13. Pedal pad
14. Pedal return cushion
15. Adjusting bolt cap
16. Adjusting bolt
17. Lock nut
18. Packing (in cabin)

: Tightening Torque
: Do not reuse

REMOVAL

1) Disconnect clutch cable hook from clutch pedal.
2) Remove attaching nuts and bolts.
3) Remove clutch pedal bracket with clutch pedal.
4) Remove each parts, if necessary.

INSTALLATION

Reverse removal procedure for installation, noting the following.

- Tighten each nuts and bolts to specified torque as indicated above figure.
- After installing, adjust clutch pedal free travel.
- Check clutch for proper function with engine running.

UNIT REPAIR OVERHAUL

CLUTCH COVER, CLUTCH DISC AND FLYWHEEL

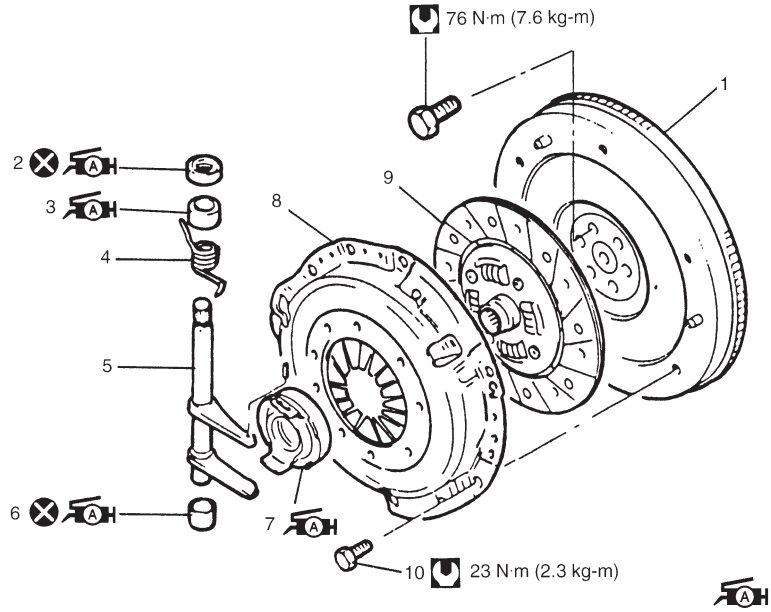

1. Flywheel
2. Clutch release shaft seal: Apply grease A 99000-25010 to seal lip.
3. Clutch release shaft No.2 bush: Apply grease A 99000-25010 to bush inside.
4. Return spring
5. Clutch release shaft
6. Clutch release shaft No.1 bush: Apply grease A 99000-25010 to bush inside.
7. Release bearing: Apply grease A 99000-25010 to joint of bearing and release shaft and also bearing inside.
8. Clutch cover
9. Clutch disc
10. Clutch cover bolt

: Tightening Torque
: Do not reuse

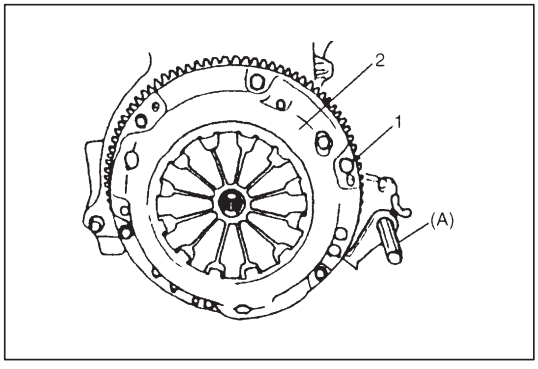

REMOVAL

1) Dismount transmission assembly referring to Section 7A.
2) Hold flywheel stationary with special tool (A) and remove clutch cover bolts (1), clutch cover (2) and clutch disc.

Special Tool
(A): 09924-17810

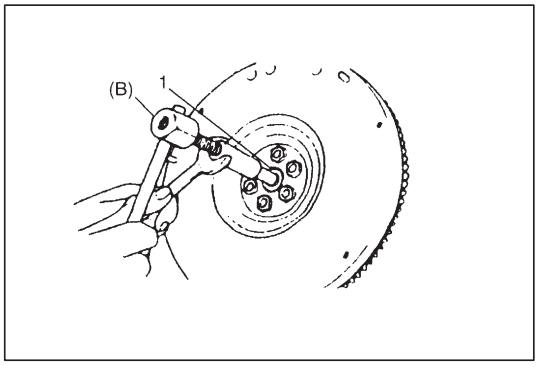

3) Pull out input shaft bearing (1) by using special tool (B) and wrench.

Special Tool
(B): 09917-58010

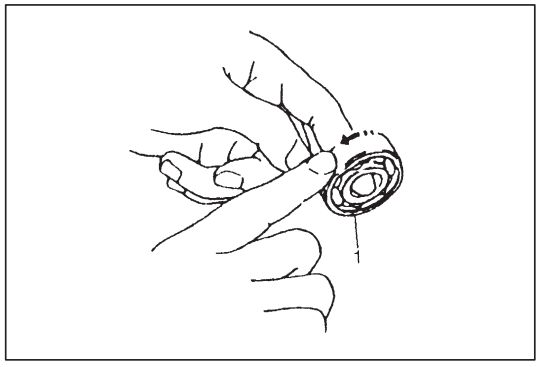

INSPECTION

Input Shaft Bearing

Check bearing (1) for smooth rotation and replace it if abnormality is found.

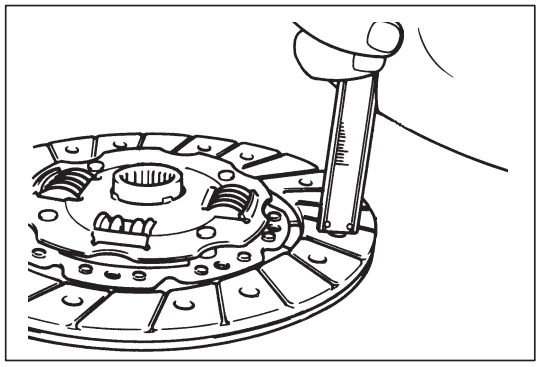

Clutch Disc

Measure depth of rivet head depression, i.e. distance between rivet head and facing surface. If depression is found to have reached service limit at any of holes, replace disc assembly.

Rivet head depth
Standard : 1.65 – 2.25 mm (0.06 – 0.09in.)
Service limit : 0.5 mm (0.02 in.)

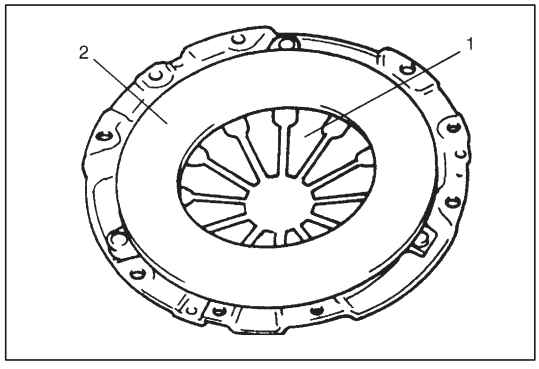

Clutch Cover

1) Check diaphragm spring (1) for abnormal wear or damage.
2) Inspect pressure plate (2) for wear or heat spots.
3) If abnormality is found, replace it as assembly. Do not disassemble it into diaphragm and pressure plate.

Flywheel

Check surface contacting clutch disc for abnormal wear or heat spots. Replace or repair as required.

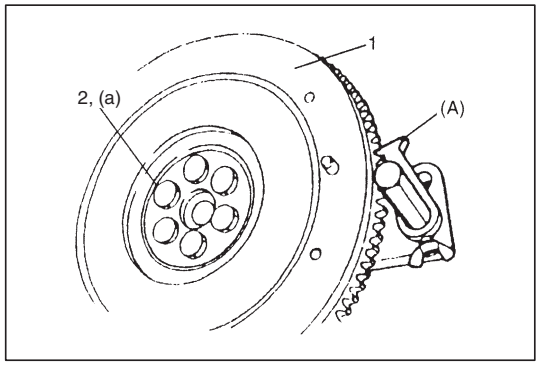

INSTALLATION

NOTE:
Before assembling, make sure that flywheel surface and pressure plate surface have been cleaned and dried thoroughly.

1) Install flywheel (1) to crankshaft and tighten bolts (2) to specification.

   Special Tool
   (A): 09924-17810

   Tightening Torque
   (a): 76 N·m (7.6 kg-m, 55.0 lb-ft)

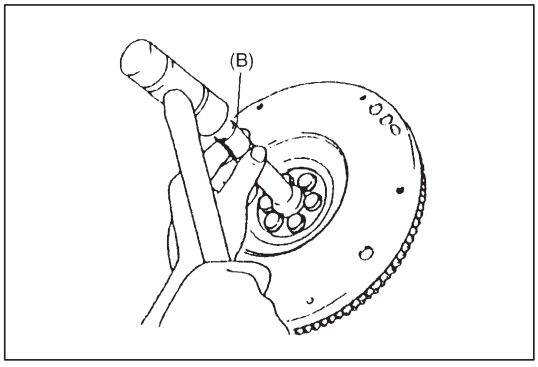

2) Using special tool, install input shaft bearing to flywheel.

Special Tool
(B): 09925-98210

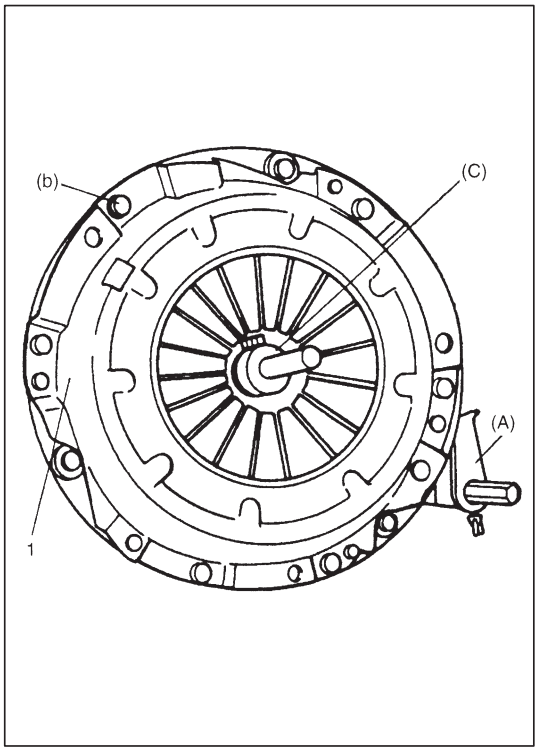

3) Aligning clutch disc to flywheel center by using special tool, install clutch cover (1) and bolts. Then tighten bolts to specification.

NOTE:
- **While tightening clutch cover bolts, compress clutch disc with special tool (C) by hand so that disc centered.**
- **Tighten cover bolts little by little evenly in diagonal order.**

Special Tool
(A): 09924-17810
(C): 09923-36330

Tightening Torque
(b): 23 N·m (2.3 kg-m, 16.5 lb-ft)

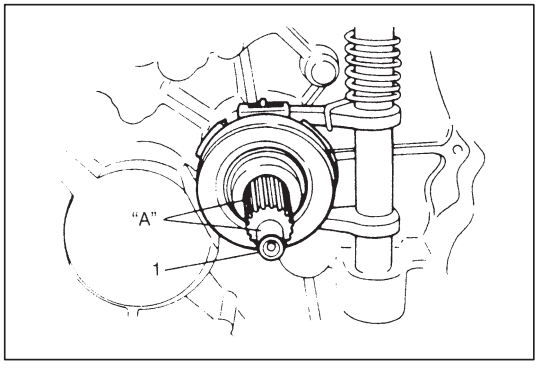

4) Slightly apply grease to input shaft (1), then join transmission assembly with engine. Refer to SECTION 7A for remounting procedure.

"A": Grease I, 99000-25210

NOTE:
When inserting transmission input shaft to clutch disc, turn crankshaft little by little to match splines.

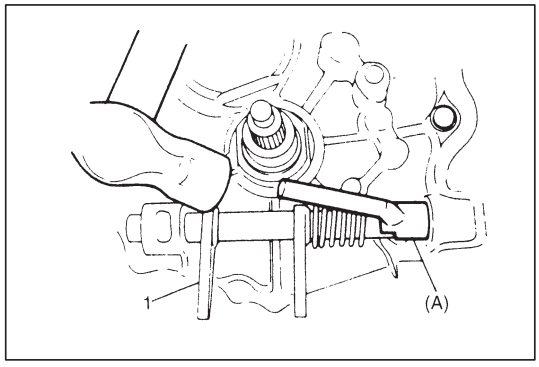

CLUTCH RELEASE SYSTEM

REMOVAL

1) Remove release lever by loosening its bolt.
2) Take out release bearing by turning release shaft (1).
3) Unhook return spring by using pliers.
4) Drive out No.2 bush by using special tool and hammer. Release shaft seal will also be pushed out.

   Special Tool
   (A): 09922-46010

5) Remove release shaft and return spring.

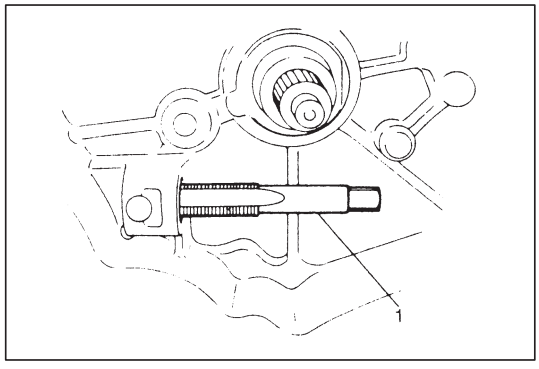

6) Install tap (M16 X 1.5) (1) to clutch release shaft No.1 bush.

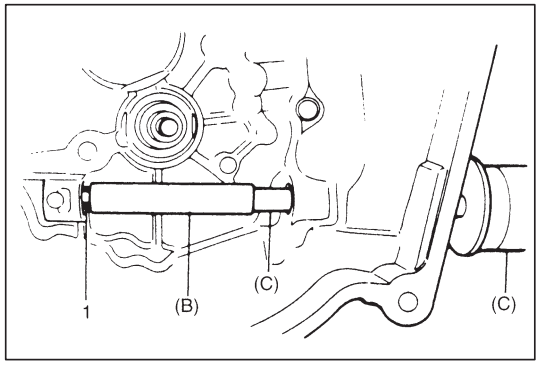

7) Pull out No.1 bush by using tap (1) and special tools.

   Special Tool
   (B): 09923-46020
   (C): 09930-30102

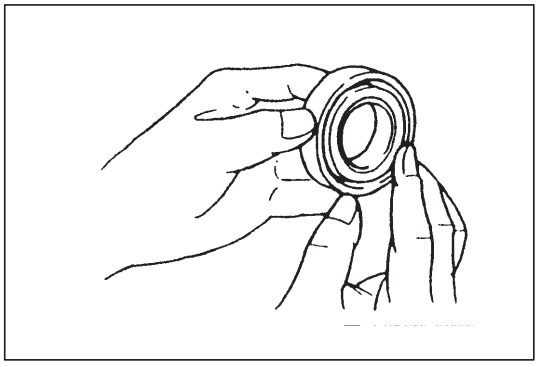

INSPECTION

Clutch release bearing

Check clutch release bearing for smooth rotation.
If abnormality is found, replace it.

CAUTION:
Do not wash release bearing. Washing may cause grease leakage and consequential bearing damage.

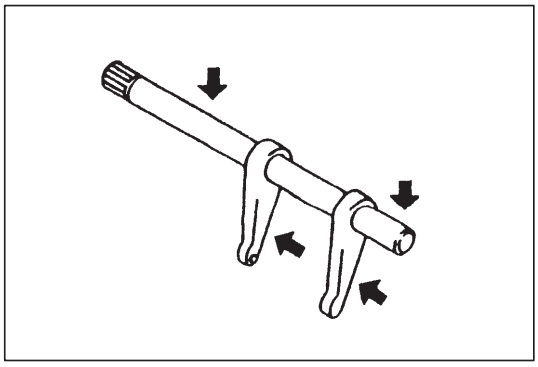

Clutch release shaft

Check clutch release shaft and its pin for deflection or damage.
If abnormality is found, replace it.

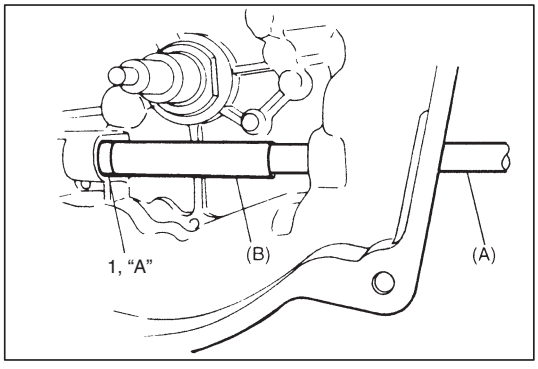

INSTALLATION

1) Drive in a new No.1 bush (1) by using special tools and then apply grease to bush inside.

   Special Tool
   (A): 09930-30102
   (B): 09923-46030

   "A": Grease A, 99000-25010

2) Install release shaft with return spring applied to it.

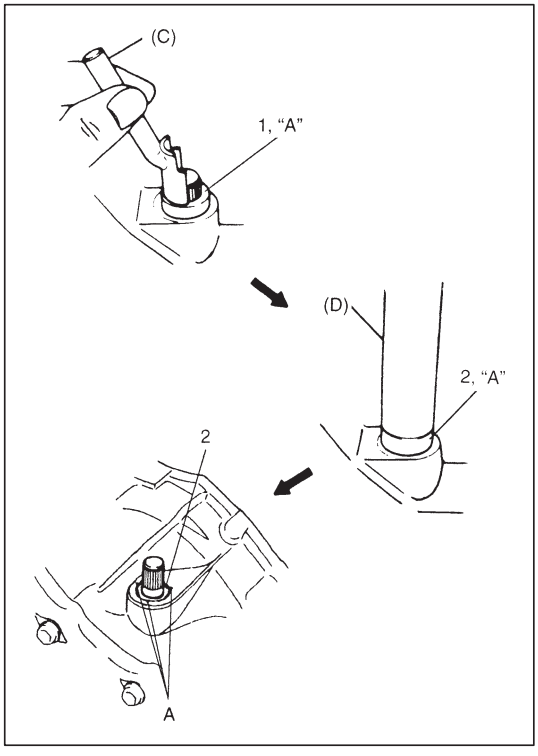

3) Apply grease to No.2 bush (1) inside and press-fit it by using the same special tool as in removal.

   "A": Grease A, 99000-25010

   Special Tool
   (C): 09922-46010

4) Coat grease to shaft seal (2) lip and then install it till it is flush with case surface. Use special tool for this installation and face seal lip downward (inside).

   "A": Grease A, 99000-25010

   Special Tool
   (D): 09925-98221

5) Caulk seal at A by using caulking tool and hammer.

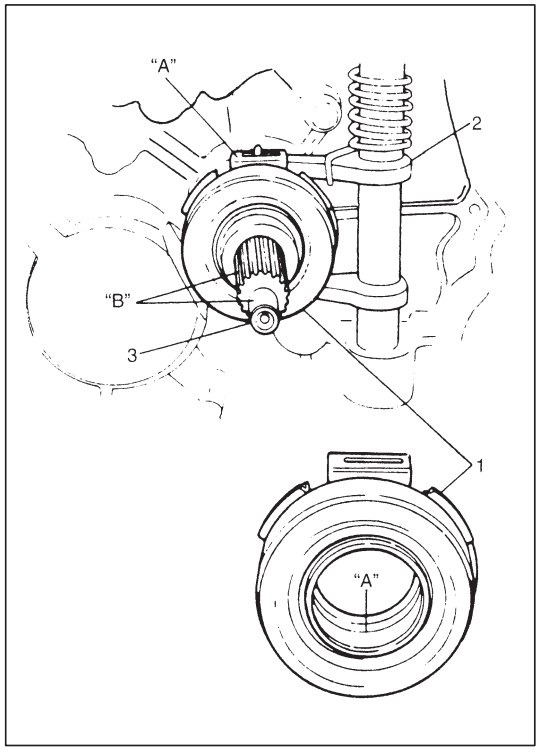

6) Hook return spring.
7) Apply grease to release bearing (1) inside and release shaft arm (2), then set bearing.

   "A": Grease A, 99000-25010

8) Apply small amount of grease to input shaft (3) spline and front end as well.

   "B": Grease I, 99000-25210

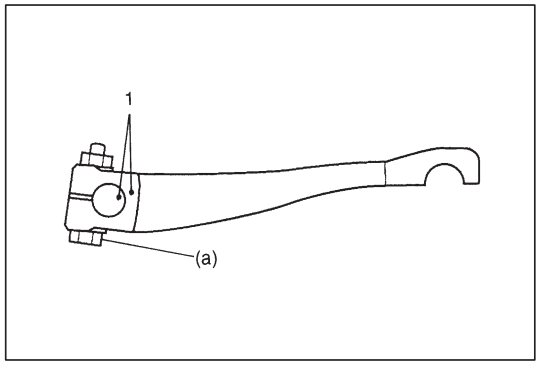

9) Set release lever to release shaft aligning their punch marks (1), then tighten bolt.

   Tightening Torque
   (a): 13 N·m (1.3 kg-m, 9.5 lb-ft)

REQUIRED SERVICE MATERIALS

MATERIAL	RECOMMENDED SUZUKI PRODUCT	USE
Lithium grease	SUZUKI SUPER GREASE A (99000-25010)	● Cable end hook and joint pin. ● Release shaft bushes and seal. ● Release shaft arm. ● Release bearing inside.
	SUZUKI SUPER GREASE I (99000-25210)	Input shaft spline and front end.

SPECIAL TOOLS

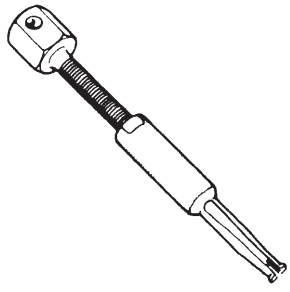

09917-58010
Bearing remover

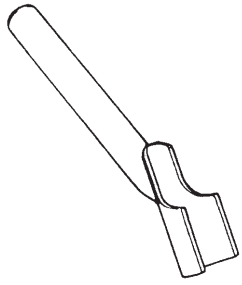

09922-46010
Bush remover

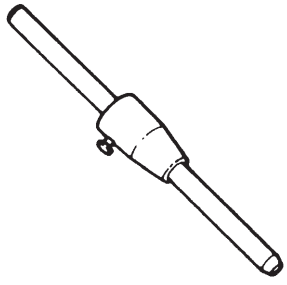

09923-36330
Clutch center guide

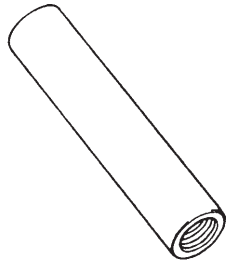

09923-46020
Joint pipe

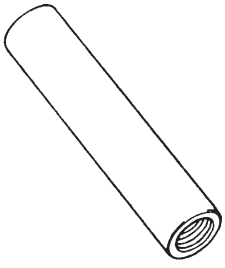

09923-46030
Joint pipe

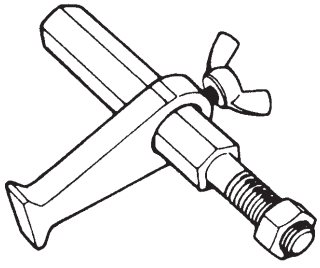

09924-17810
Flywheel holder

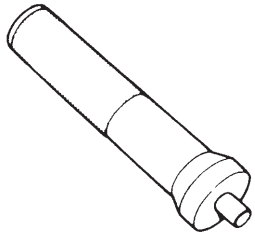

09925-98210
Input shaft bearing installer

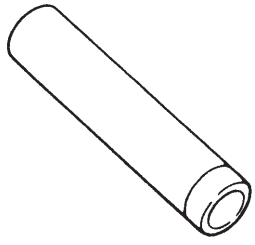

09925-98221
Bearing installer

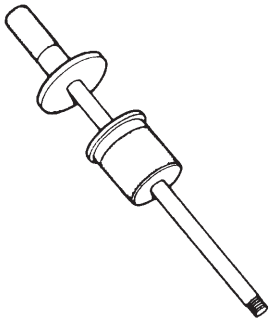

09930-30102
Sliding shaft

SECTION 8

BODY ELECTRICAL SYSTEM

WARNING:
For vehicles equipped with Supplemental Restraint (Air Bag) System:

- **Service on and around the air bag system components or wiring must be performed only by an authorized SUZUKI dealer. Refer to "Air Bag System Components and Wiring Location View" under "General Description" in air bag system section in order to confirm whether you are performing service on or near the air bag system components or wiring. Please observe all WARNINGS and "Service Precautions" under "On-Vehicle Service" in air bag system section before performing service on or around the air bag system components or wiring. Failure to follow WARNINGS could result in unintentional activation of the system or could render the system inoperative. Either of these two conditions may result in severe injury.**
- **Technical service work must be started at least 90 seconds after the ignition switch is turned to the "LOCK" position and the negative cable is disconnected from the battery. Otherwise, the system may be activated by reserve energy in the Sensing and Diagnostic Module (SDM).**

CONTENTS

GENERAL DESCRIPTION

The body electrical components of this vehicle are designed to operate on 12 Volts power supplied by the battery. The electrical system utilizes negative ground polarity.

CAUTIONS IN SERVICING

When performing works related to electric systems, observe following cautions for the purpose of protection of electrical parts and prevention of a fire from occurrence.

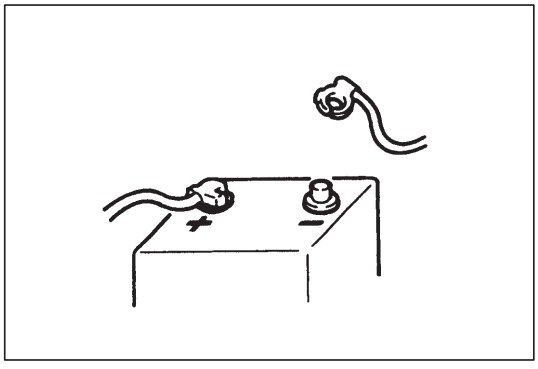

- When removing the battery from the vehicle or disconnecting the cable from the battery terminals for inspection or service works on the electric systems, always confirm first that the ignition switch and all the other switches have been turned OFF. Otherwise, the semi-conductor part may be damaged.
- When disconnecting cables from the battery, be sure to disconnect the one from the negative (–) terminal first and then the other from the positive (+) terminal.
- Reverse the above order when connecting the cables to the battery terminals.

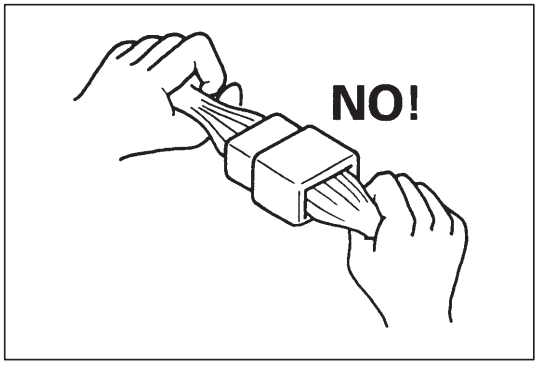

- When disconnecting connectors, never pull the wiring harnesses. Unlock the connector lock first and then pull them apart by holding connectors themselves.

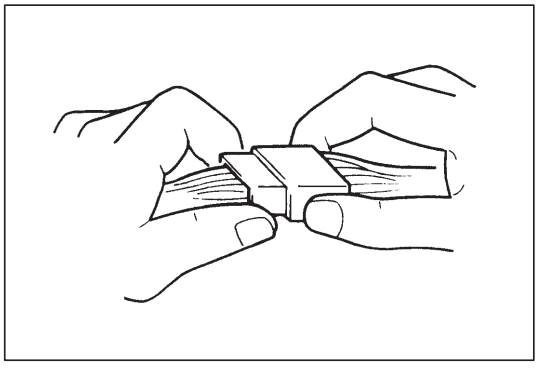

- When connecting connectors, also hold connectors and put them together until they lock securely (a click is heard).

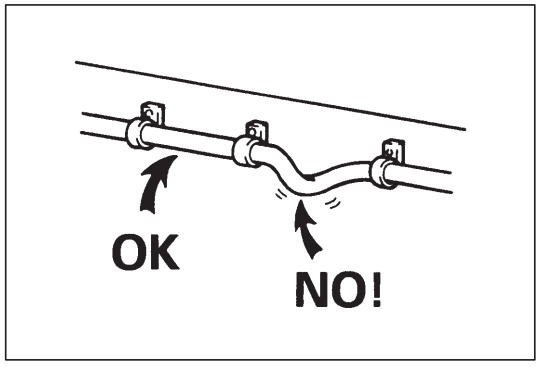

- When installing the wiring harness, fix it with clamps so that no slack is left.

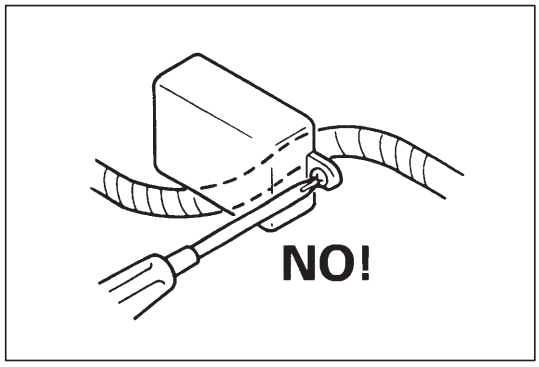

- When installing vehicle parts, be careful so that the wiring harness is not interfered with or caught by any other part.

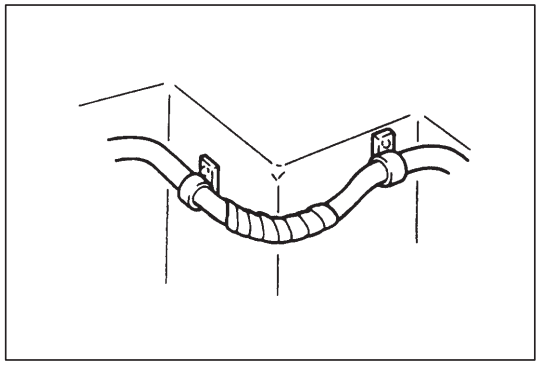

- To avoid damage to the harness, protect its part which may contact against a part forming a sharp angle by winding tape or the like around it.

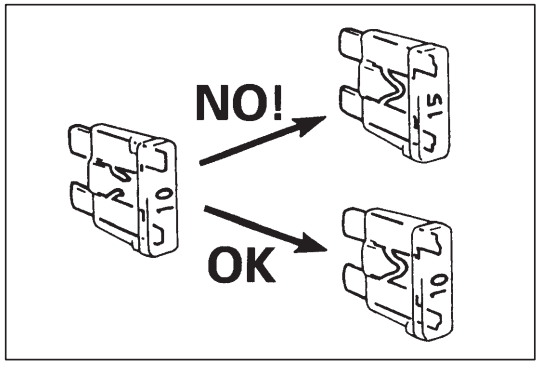

- When replacing a fuse, make sure to use a fuse of the specified capacity. Use of a fuse with a larger capacity will cause a damage to the electrical parts and a fire.

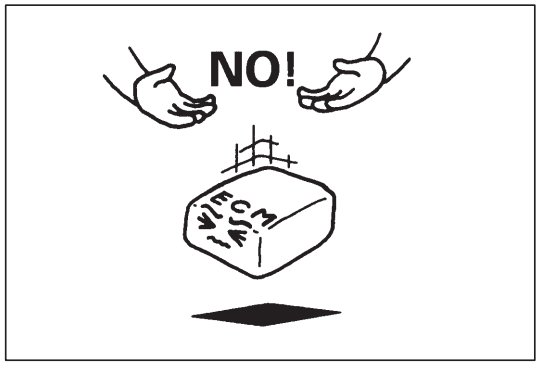

- Always be careful not to handle electrical parts (computer, relay, etc.) in a rough manner or drop them.

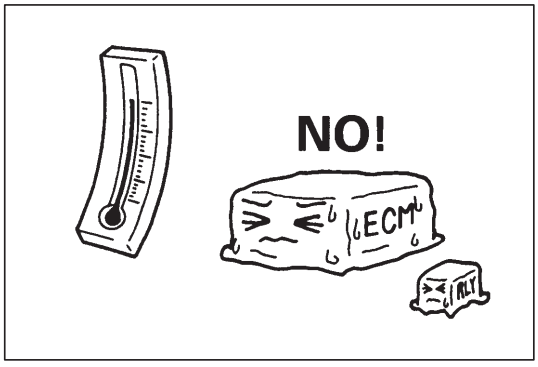

- When performing a work that produces a heat exceeding 80°C in the vicinity of the electrical parts, remove the heat sensitive electrical part(s) beforehand.

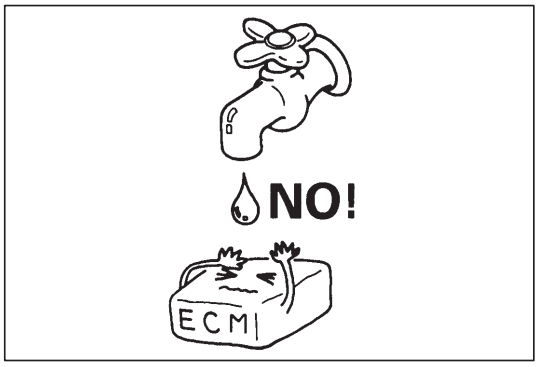

- Use care not to expose connectors and electrical parts to water which will be a cause of a trouble.

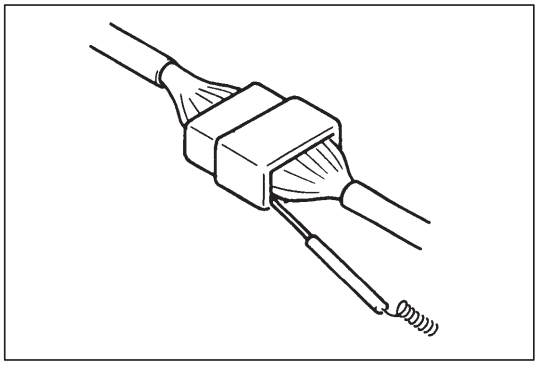

- When using a tester for checking continuity or measuring voltage, be sure to insert the tester probe from the wire harness side.

SYMBOLS AND MARKS

Refer to Wiring Diagram Manual.

ABBREVIATIONS

Refer to Wiring Diagram Manual.

Symbol	Wire Color	Symbol	Wire Color
B	Black	O	Orange
Bl	Blue	R	Red
Br	Brown	W	White
G	Green	Y	Yellow
Gr	Gray	P	Pink
Lbl	Light blue	V	Violet
Lg	Light green		

WIRING COLOR SYMBOLS

The wire color is abbreviated to the first (or first two) alphabet(s) of each color.

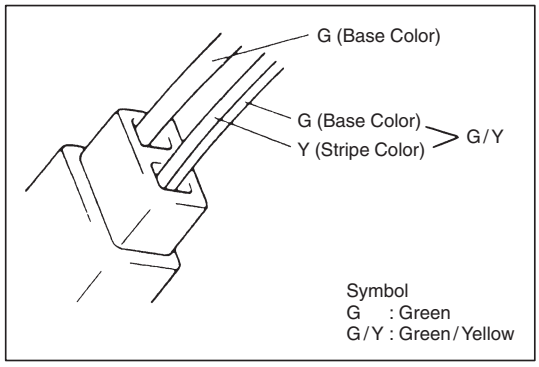

There are two kinds of colored wire used in this vehicle. One is single-colored wire and the other is dual-colored (striped) wire.
The single-colored wire uses only one color symbol (i.e. “G”).
The dual-colored wire uses two color symbols (i.e. “G/Y”). The first symbol represents the base color of the wire (“G” in the figure) and the second symbol represents the color of the stripe (“Y” in the figure).

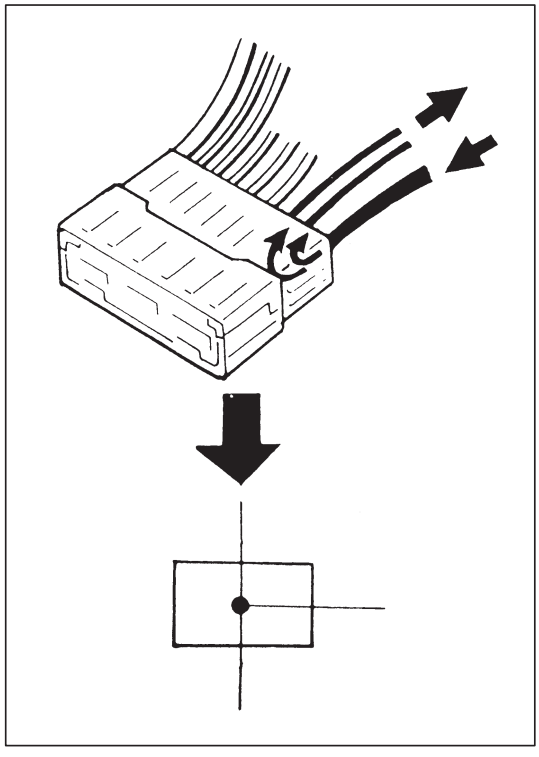

JOINT CONNECTOR (J/C)

- Wiring of this vehicle employs joint connector (J/C) which divide one wire into several different wires or combine several different wires into one wire.
- The joint connector is as shown in the figure.

FUSE BOX AND RELAY

Refer to Wiring Diagram Manual for locations and circuits.

POWER SUPPLY DIAGRAM

Refer to Wiring Diagram Manual.

SECTION 8B

LIGHTING SYSTEM

WARNING:
For vehicles equipped with Supplemental Restraint (Air Bag) System:

- **Service on and around the air bag system components or wiring must be performed only by an authorized SUZUKI dealer. Refer to "Air Bag System Components and Wiring Location View" under "General Description" in air bag system section in order to confirm whether you are performing service on or near the air bag system components or wiring. Please observe all WARNINGS and "Service Precautions" under "On-Vehicle Service" in air bag system section before performing service on or around the air bag system components or wiring. Failure to follow WARNINGS could result in unintentional activation of the system or could render the system inoperative. Either of these two conditions may result in severe injury.**
- **Technical service work must be started at least 90 seconds after the ignition switch is turned to the "LOCK" position and the negative cable is disconnected from the battery. Otherwise, the system may be activated by reserve energy in the Sensing and Diagnostic Module (SDM).**

CONTENTS

GENERAL DESCRIPTION

CAUTIONS IN SERVICING

Refer to Section 8.

SYMBOLS AND MARKS

Refer to Section 8.

WIRING COLOR SYMBOLS

Refer to Section 8.

ABBREVIATIONS

Refer to Section 8.

JOINT CONNECTOR

Refer to Section 8.

FUSE BOX AND RELAY

Refer to Section 8.

POWER SUPPLY DIAGRAM

Refer to Section 8.

HEADLIGHTS

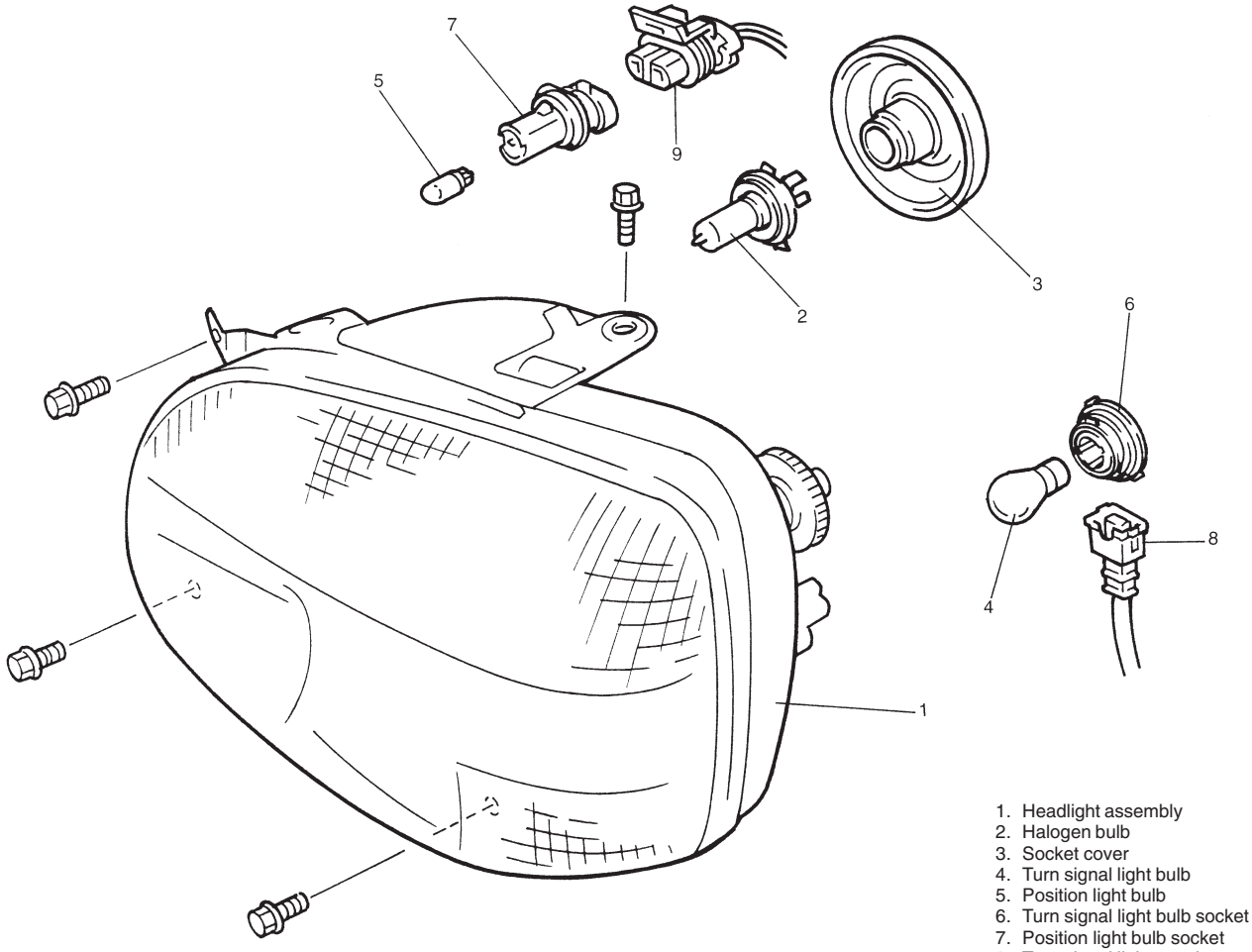

1. Headlight assembly
2. Halogen bulb
3. Socket cover
4. Turn signal light bulb
5. Position light bulb
6. Turn signal light bulb socket
7. Position light bulb socket
8. Turn signal light coupler
9. Position light coupler

HEADLIGHT WITH LEVELING SYSTEM

1. Headlight leveling switch
2. Headlight leveling unit (actuator)
3. Headlight
4. Headlight leveling unit shaft

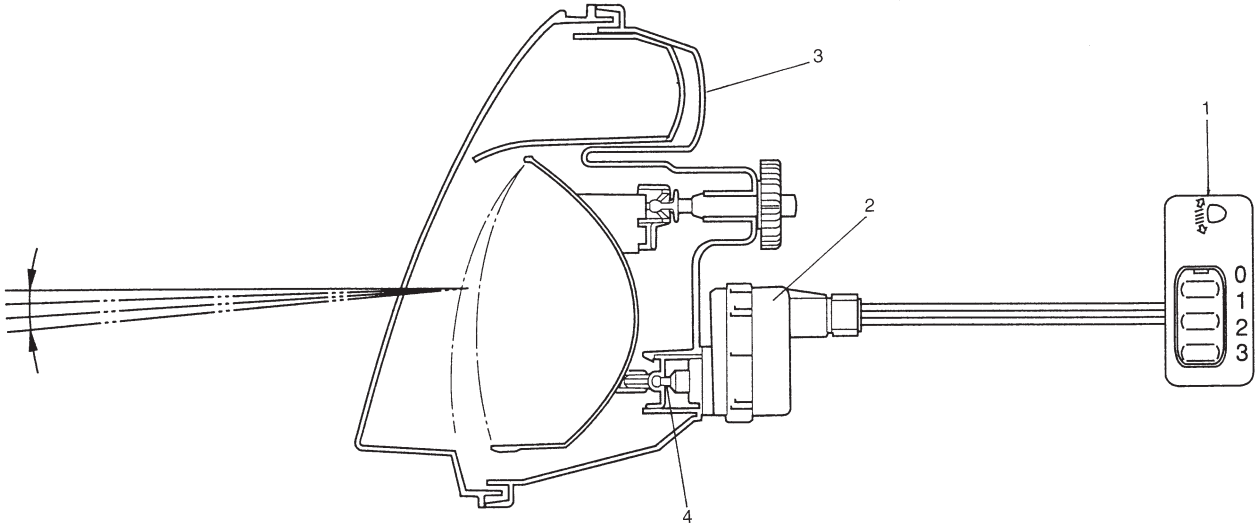

Switch Position	Headlight beam down angle
0	———
1	0.75°
2	1.5°
3	2.25°

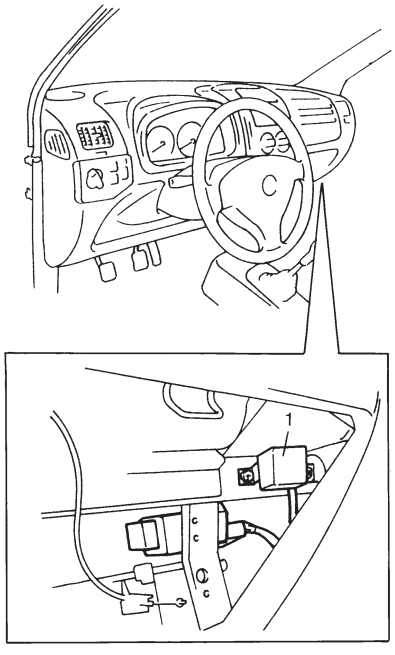

The illustration shows LH steering vehicle.
And RH steering vehicle is symmetrical.

1. D.R.L. controller

DAYTIME RUNNING LIGHT (D.R.L.) SYSTEM (IF EQUIPPED)

The D.R.L. system lights headlights when the following two conditions are met.

Conditions for D.R.L. system operation

- The engine is running.
- The lighting switch is at “OFF” position.

DIAGNOSIS

HEADLIGHTS

Trouble	Possible cause	Correction
Only one light does not light	● Bulb burnt out ● Fuse blown ● Socket, wiring or grounding faulty	Replace bulb Replace fuse Repair as necessary
Headlights do not light when lighting switch is in headlight position and engine is stopped	● Main fuse and/or fuses blown ● Lighting and dimmer switch faulty ● Wiring or grounding faulty ● D.R.L. controller faulty	Replace main fuse and/or fuses to check for short Check switches Repair as necessary Replace controller
Headlights do not light when lighting switch is in OFF position and engine is running	● D.R.L. system faulty	Refer to “DAYTIME RUNNING LIGHT (D.R.L.) SYSTEM (IF EQUIIPED)”
Only one beam (“Hi” or “Lo”) does not light	● Bulb burnt out ● Dimmer switch faulty	Replace bulb Check switch

HEADLIGHTS WITH LEVELING SYSTEM

Trouble	Possible cause	Correction
Both headlights do not move	● Fuse blown ● Leveling switch faulty ● Supply voltage too low	Check circuit and replace fuse Check switch or replace it as necessary Recharge or replace battery
One of headlights (either Right or Left) does not move	● Socket, wiring or grounding faulty ● Actuator faulty ● Vehicle body around headlight deformed ● Headlight ass’y itself deformed	Repair as necessary Replace actuator Repair body Replace headlight ass’y

DAYTIME RUNNING LIGHT (D.R.L.) SYSTEM (IF EQUIPPED)

Trouble	Possible cause	Correction
Headlights do not light when lighting switch is in OFF position and engine is running	● D.R.L. controller faulty ● Wiring or grounding faulty	Replace controller Repair as necessary
Headlights still light even if lighting switch is in OFF position and engine is stopped	● D.R.L. controller faulty ● “Y/B” circuit faulty	Replace controller Repair
Headlights still light even if lighting switch is in tail position when engine is running	● D.R.L. controller faulty ● Lighting switch faulty ● Position light relay faulty ● Wiring or grounding faulty	Replace controller Repair or replace switch Replace relay Repair as necessary

TURN SIGNAL AND HAZARD WARNING LIGHTS

Trouble	Possible cause	Correction
Flash rate high or one side only flashes	● Faulty ground ● Incorrect bulb ● One of light bulbs burnt out ● Turn signal/hazard warning relay faulty ● Open circuit or high resistance existing between turn signal/hazard warning switch and lights on one side	Repair Replace Replace Replace Repair
No flashing	● Blown fuse on turn signal/hazard warning circuit ● Open circuit or high resistance existing between battery and switch ● Relay faulty ● Switch faulty	Replace Repair Replace Replace
Flash rate low	● Supply voltage too low ● Relay faulty	Recharge battery Repair

CLEARANCE, TAIL AND LICENCE PLATE LIGHTS

Trouble	Possible cause	Correction
One of lights does not light	● Bulb burnt out ● Wiring or grounding faulty	Replace Repair as necessary
Only right side or left side lights, or only licence plate light do not light	● Fuse blown ● Wiring faulty	Replace fuse Repair
All lights do not light when lighting switch is in ON position and engine is stopped	● Main fuse and/or fuses blown ● Lighting switch faulty ● Position light relay faulty ● Wiring or grounding faulty ● D.R.L. controller faulty	Replace fuses to check for short Check switch Replace relay Repair as necessary Replace controller
All lights do not light when lighting switch is in OFF position and engine is running	● D.R.L. system faulty	Refer to “DAYTIME RUNNING LIGHT (D.R.L.) SYSTEM (IF EQUIPPED)”

BACK-UP LIGHTS

Trouble	Possible cause	Correction
Back-up lights do not light	● Fuse blown ● Bulb burnt out ● Back-up light switch or shift switch faulty ● Wiring or grounding faulty	Replace fuse to check for short Replace Check switch Repair as necessary
Back-up lights remains ON	● Back-up light switch or shift switch faulty ● Wiring or grounding faulty	Check switch Repair as necessary

BRAKE LIGHTS

Trouble	Possible cause	Correction
Stop lights do not light	● Fuse blown ● Bulb burnt out ● Stop light switch faulty ● Wiring or grounding faulty	Replace fuse to check for short Replace Adjust or replace switch Repair as necessary
Stop lights stay on	● Stop light switch faulty	Adjust or replace switch
Only one light does not light	● Bulb burnt out ● Wiring or grounding faulty	Replace Repair as necessary

FRONT FOG LIGHTS (IF EQUIPPED)

Trouble	Possible cause	Correction
Only one light does not light	● Bulb burnt out ● Fuse blown ● Socket, wiring or grounding faulty	Replace bulb Replace fuse Repair as necessary
Front fog lights do not light	● Clearance, tail and licence plate lights all do not light ● Fuse blown ● Front fog light switch faulty ● Front fog light relay faulty ● Wiring or grounding faulty	Refer to “CLEARANCE, TAIL AND LICENCE PLATE LIGHTS” Replace fuse to check for short Check switch Replace relay Repair as necessary
Front fog lights light when lighting switch is in OFF position	● Front fog light relay faulty ● Wiring of front fog relay faulty	Replace relay Repair as necessary

REAR FOG LIGHT

Trouble	Possible cause	Correction
Rear fog light does not come on when headlights and front fog lights (if equipped) come on	● Main fuse and/or fuses blown ● Rear fog light switch faulty ● Wiring or grounding faulty ● Bulb burnt out ● Rear fog light controller faulty	Replace main fuse and/or fuses to check for short Check switch Repair as necessary Replace Replace controller
[If front fog lights are equipped] Rear fog light does not come on when only headlights come on although it comes on when front fog lights come on	● Rear fog light controller harness “R/Bl” faulty	Repair
[If front fog lights are equipped] Rear fog light does not come on when only front fog lights come on although it comes on when headlights come on	● Rear fog light controller harness “V” faulty	Repair

INTERIOR LIGHT

Trouble	Possible cause	Correction
Interior light does not light up	● Bulb burnt out ● Fuse blown ● Wiring or grounding faulty ● Door open switch faulty ● Interior light faulty ● Lighting switch faulty	Replace Replace Repair as necessary Check switch Check light Check switch

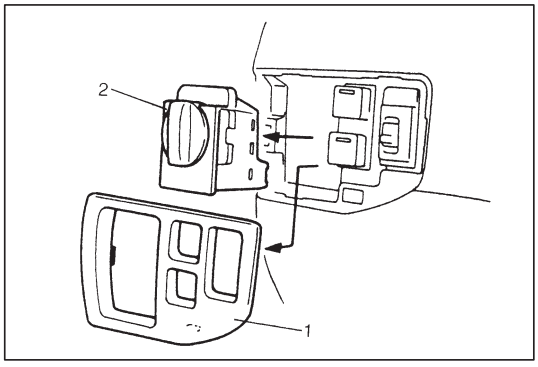

ON-VEHICLE SERVICE

HEADLIGHTS

LIGHTING SWITCH

REMOVAL

1) Disconnect negative cable at battery.
2) Remove garnish (1) of instrument panel switches.
3) Remove lighting switch (2) from instrument panel.

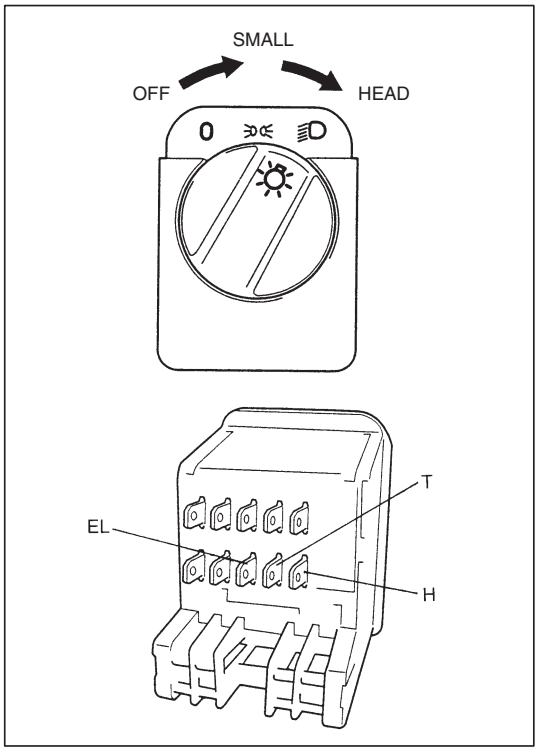

INSPECTION

Check the continuity at each switch position. If any continuity is not obtained, replace switch.

Terminal / Switch Position	EL	T	H
OFF			
SMALL	○	○	
HEAD	○	○	○

INSTALLATION

Reverse removal procedure for installation.

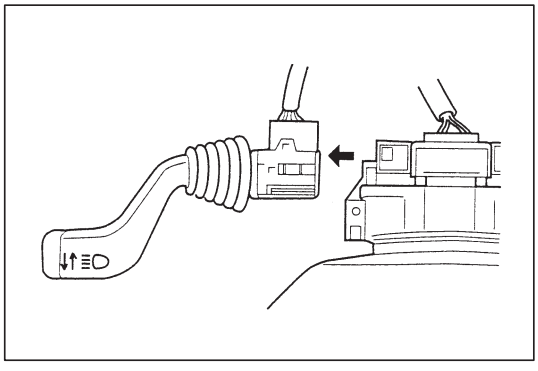

DIMMER AND PASSING SWITCH (IN TURN AND DIMMER SWITCH)

REMOVAL

1) Disconnect negative cable at battery.
2) Remove steering column cover. Refer to step 5) of CONTACT COIL CABLE ASSEMBLY REMOVAL in Section 3C.
3) Pull out turn & dimmer switch.
4) Disconnect turn & dimmer switch lead wire couplers.

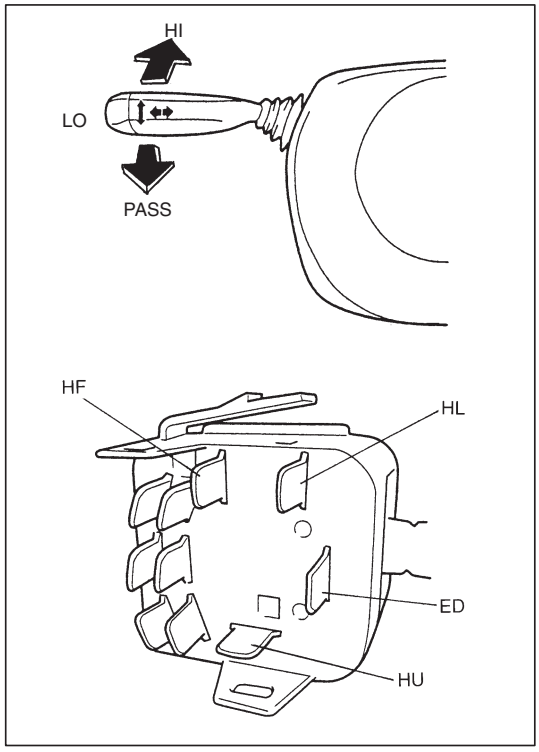

INSPECTION

Check the continuity at each switch position. If any continuity is not obtained, replace switch.

Switch Position \ Terminal	ED	HL	HU	HF
Passing (PASS)	○	○	○	○
Low Beam	○	○		
High Beam (HI)	○		○	

INSTALLATION

1) Connect couplers to turn & dimmer switch.
2) Push turn & dimmer switch into steering column till it clicks.
3) Install steering column cover. Reverse removal procedure.

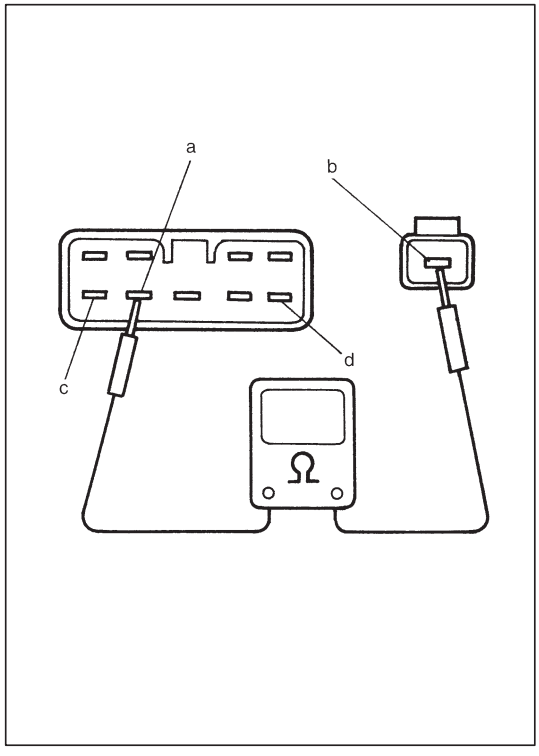

D.R.L. CONTROLLER (if equipped)

INSPECTION

1) Disconnect negative cable at battery.
2) Disconnect D.R.L. controller lead wire coupler.
3) Check the continuity between controller terminals as follow:

Position light circuit : between terminal (a) and (b)
Headlight circuit : between terminal (c) and (d)

If any continuity is not obtain, replace controller.

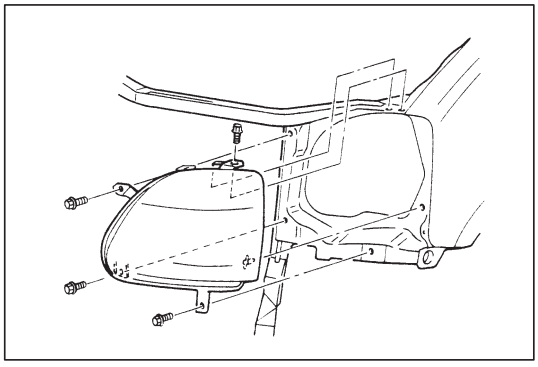

REMOVAL

1) Disconnect negative cable at battery.
2) Remove front bumper.
3) Disconnect harness and couplers from headlight assembly.
4) Remove four bolts and pull headlight assembly off vehicle.

INSTALLATION

Reverse removal procedure for installation.
Make sure to follow HEADLIGHT AIMING WITH SCREEN and aim headlight after installation.

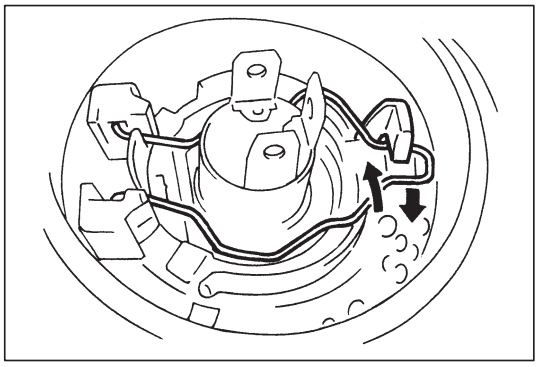

BULB REPLACEMENT

WARNING:
Don’t touch when the bulb is hot.

1) Disconnect negative cable at battery.
2) Disconnect harness from bulb.
3) Remove socket cover and bulb.
4) Replace bulb and install in reverse removal procedure.

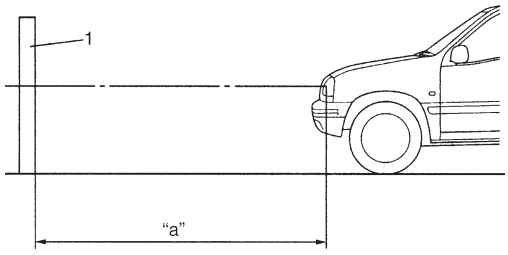

1. Screen

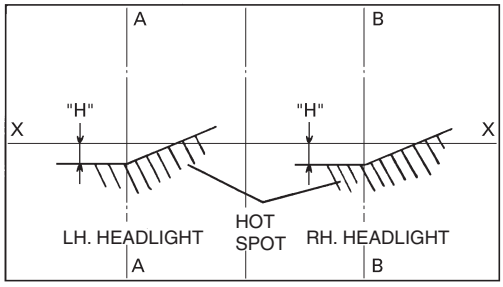

LH steering vehicle shown
X-X: Horizontal center line of headlight bulb
A-A: Vertical center line of left headlight bulb
B-B: Vertical center line of right headlight bulb

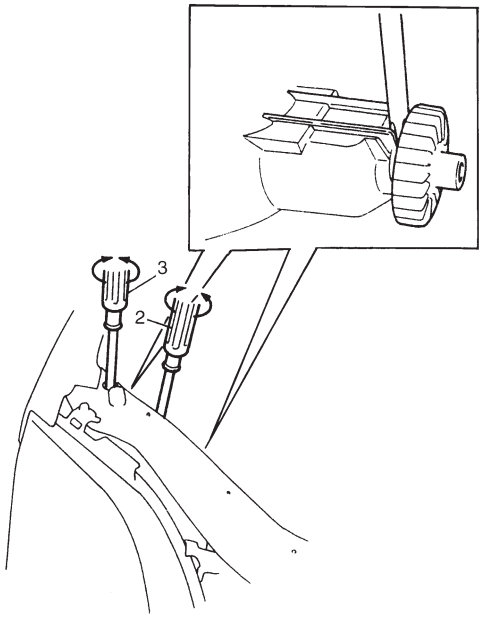

2. For right / left adjustment
3. For up / down adjustment

HEADLIGHT AIMING WITH SCREEN

NOTE:

- **Unless otherwise obligated by local regulations, adjust headlight aiming according to following procedure.**
- **After replacing headlight, be sure to perform its aiming.**
- **When inspecting and adjusting headlight with leveling system, make sure to set the leveling switch to "0" position with IG switch ON.**

Before adjustment, make sure the following.

a) Place vehicle on a flat surface in front of blank wall as below ahead of headlight surface.

Clearance "a": 10 m (32.8 ft)

b) Adjust air pressure of all tires to a specified value respectively.

c) Bounce vehicle body up and down by hand to stabilize suspension.

d) Carry out one driver aboard.

Driver's weight: 75 kg (165 lb)

Adjustment

1) Check to see if hot spot (high intensity zone) of each main (low) beam axis falls as illustrated.

Clearance "H": Approx. 130 mm (5.15 in.)

2) If headlight aiming is not set properly, align it to specification by adjusting aiming screw and aiming gear.

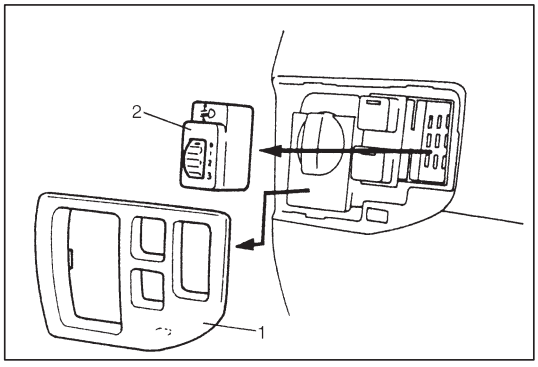

HEADLIGHTS WITH LEVELING SYSTEM

LEVELING SWITCH

REMOVAL

1) Disconnect negative cable at battery.
2) Remove garnish (1) of instrument panel switches.
3) Remove leveling switch (2) from instrument panel.

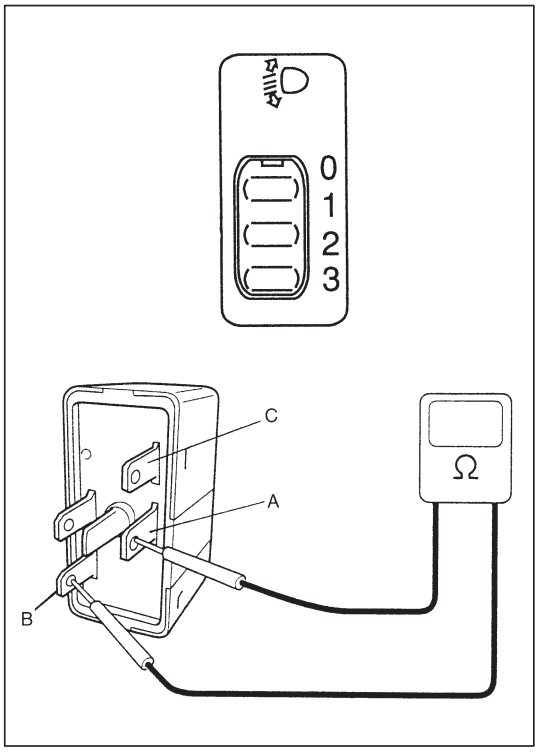

INSPECTION

Check the resistance between terminal “A” and “B” and terminal “B” and “C” at each leveling switch position. If the obtained resistance value is out of specification, replace switch.

Position	Resistance (Ω)	
	Between terminal “A” and “B”	Between terminal “B” and “C”
1	136 – 150	———
2	278 – 308	
3	421 – 465	522 – 576

INSTALLATION

Reverse removal procedure for installation.

LEVELING ACTUATOR

INSPECTION

All headlight system couples connected including leveling actuator and switch, and at ignition switch ON, listen to the leveling actuator sound on both actuators according to the movement of the leveling switch. If no sound is heard with the movement of the leveling switch, replace headlight assembly.

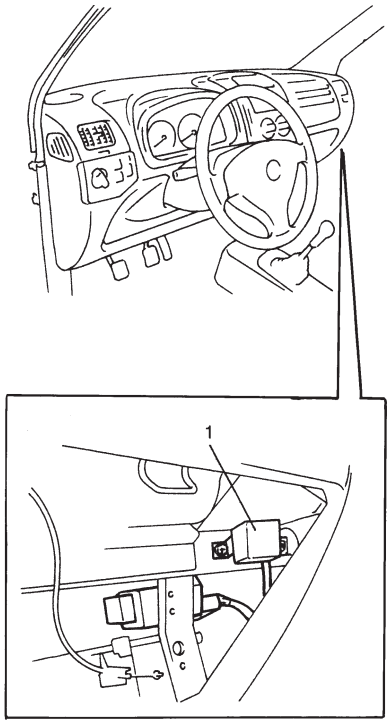

The illustration shows LH steering vehicle.
And RH steering vehicle is symmetrical.

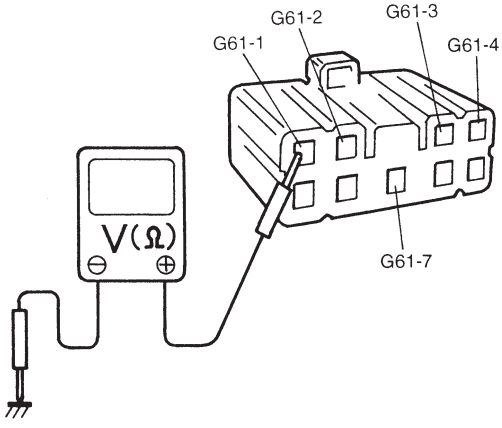

DAYTIME RUNNING LIGHT (D.R.L.) SYSTEM (IF EQUIPPED)

DAYTIME RUNNING LIGHT CIRCUIT

INSPECTION

1) Apply parking brake and stop engine.
   With turned on lighting switch and operated dimmer switch, check headlights come on.
2) Start engine. Turn lighting switch at “OFF”.
   Check headlights come on. Turn lighting switch at “Clearance light” position. Check headlights go off.
   If check result is OK, D.R.L. controller (1) is OK.
3) Disconnect negative cable at battery.
4) Disconnect D.R.L. controller coupler and connect negative cable at battery.
5) Check that the voltage and resistance between following terminals are specifications.

Terminals	Condition	Specification
G61-4 and ground	When ignition switch is in OFF	0 V
	When ignition switch is in ON	10 – 15 V
G61-7 and ground	———	Continuity
G61-2 and ground	Engine stop	Continuity
	Engine run	No continuity
G61-3 and ground	———	10 – 15 V
G61-1 and ground	———	Continuity

If check result is not satisfactory, repair.

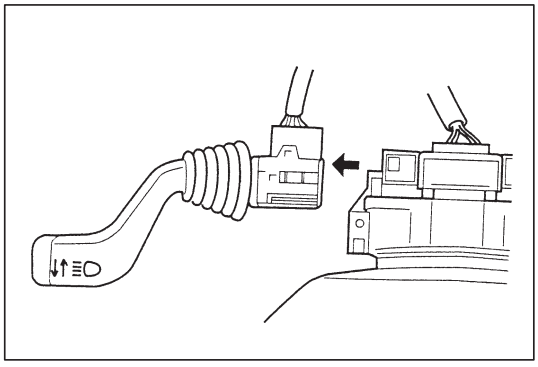

TURN SIGNAL AND HAZARD WARNING LIGHTS

TURN SIGNAL SWITCH (IN TURN AND DIMMER SWITCH)

REMOVAL

1) Disconnect negative cable at battery.
2) Remove steering column cover. Refer to step 5) of CONTACT COIL CABLE ASSEMBLY REMOVAL in Section 3C.
3) Pull out turn & dimmer switch.
4) Disconnect turn & dimmer switch lead wire couplers.

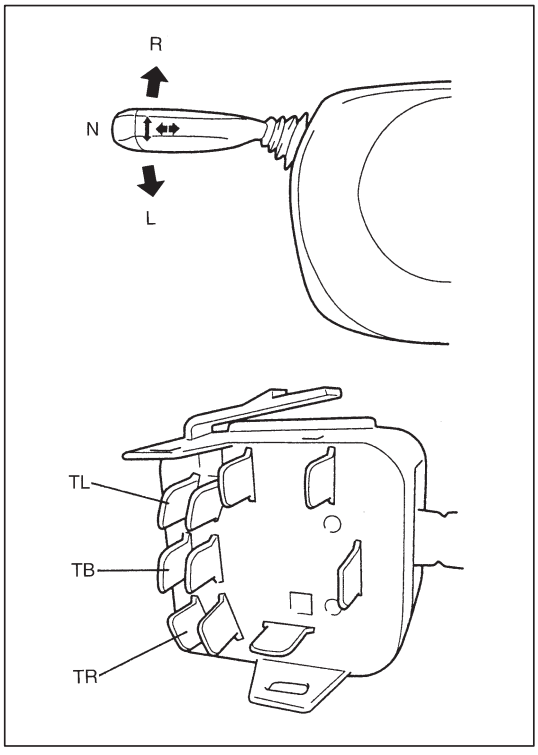

INSPECTION

Check the continuity at each switch position. If any continuity is not obtained, replace switch.

Terminal / Switch Position	TL	TB	TR
L	○	○	
N			
R		○	○

INSTALLATION

1) Connect couplers to turn & dimmer switch.
2) Push turn & dimmer switch into steering column till it clicks.
3) Install steering column cover. Reverse removal procedure.

HAZARD SWITCH

REMOVAL

1) Remove center lower garnish. Refer to step 3) of HEATER CONTROL LEVER ASSEMBLY REMOVAL in Section 1A.

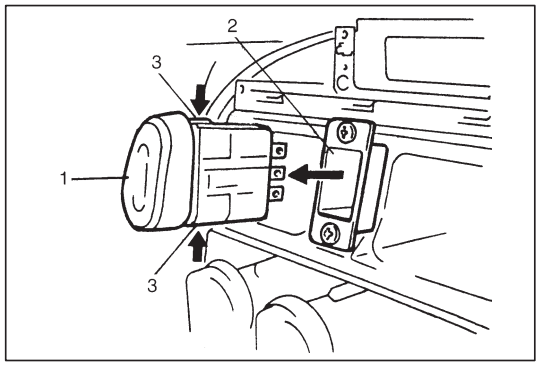

2) Remove hazard switch (1) from hazard switch case (2) installed instrument panel with unlocked the locking part (3) as shown in figure.

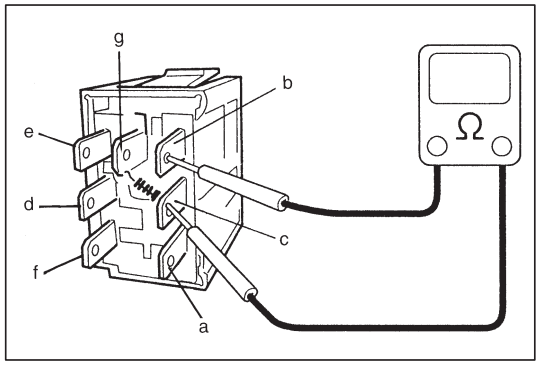

INSPECTION

Check the continuity of each switch position.
If any continuity is not obtained, replace switch.

	a	b	c	d	e	f	g
OFF	○	○			∿	⊘	○
ON		○	○	○	○	○	⊘ ○

INSTALLATION

Reverse removal procedure for installation.

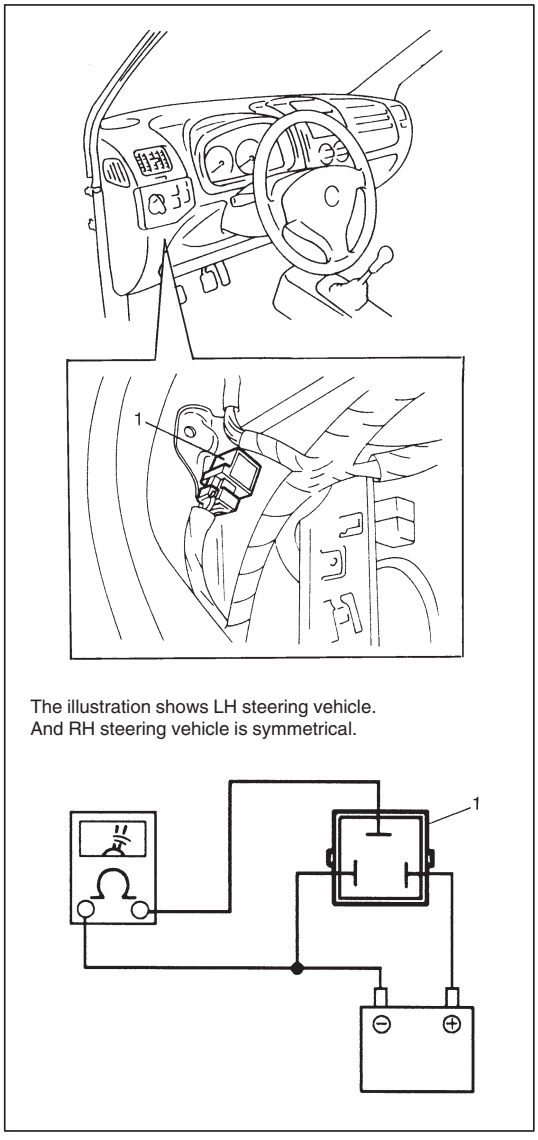

The illustration shows LH steering vehicle.
And RH steering vehicle is symmetrical.

HAZARD RELAY

INSPECTION

1) Disconnect negative cable at battery.
2) Disconnect hazard relay lead wire coupler.
3) Connect battery and tester as the left illustration.
4) Unless a continued click sound is heard, replace relay (1).

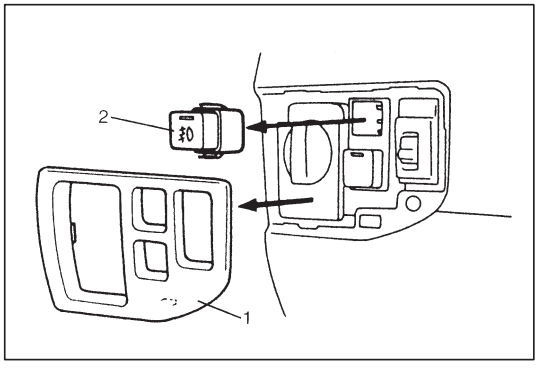

FRONT FOG LIGHTS (IF EQUIPPED)

FRONT FOG LIGHT SWITCH

REMOVAL

1) Disconnect negative cable at battery.
2) Remove garnish (1) of instrument panel switches.
3) Remove fog light switch (2) from instrument panel.

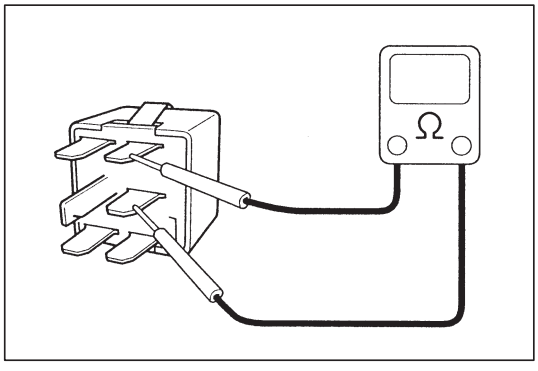

INSPECTION

Check front fog light switch for continuity.

ON : Continuity
OFF : No continuity

INSTALLATION
Reverse removal procedure for installation.

NOTE:
Front fog lights light up only when headlights (low or high beams) or position lights are ON.
Front fog lights turn OFF automatically when position lights are turned OFF. If front fog light switch holds ON position, front fog lights turn ON automatically when headlights or position lights are ON again.

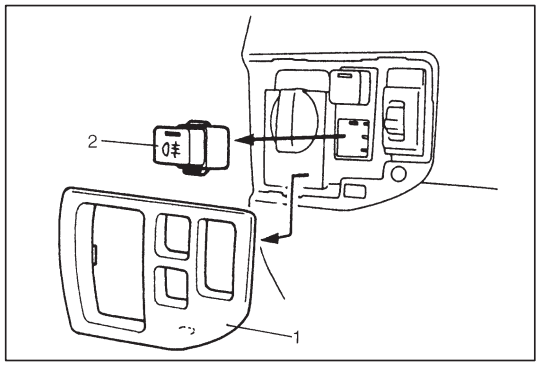

REAR FOG LIGHT

REAR FOG LIGHT SWITCH

REMOVAL
1) Disconnect negative cable at battery.
2) Remove garnish (1) of instrument panel switches.
3) Remove rear fog light switch (2) from instrument panel.

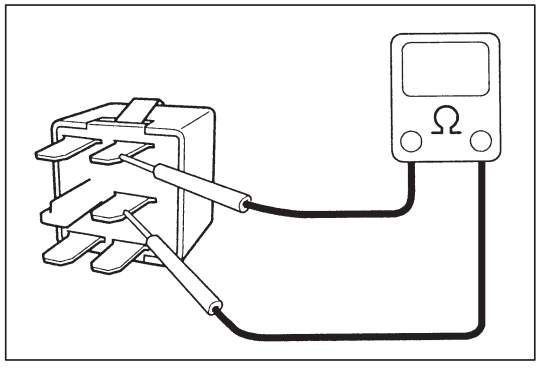

INSPECTION
Check rear fog light switch for continuity.

PUSH : Continuity
FREE : No continuity

INSTALLATION
Reverse removal procedure for installation.

NOTE:
Rear fog light lights up only when headlights (low or high beams) or front fog lights (if equipped) are ON.
Rear fog light turns OFF automatically when headlights and front fog lights (if equipped) are turned OFF.

REAR FOG LIGHT

INSPECTION

1) Check headlights and front fog lights (if equipped) come on.

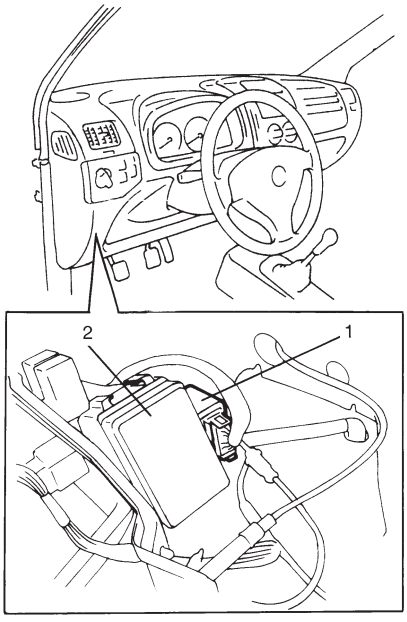

2. Fuse box

The illustration shows LH steering vehicle.
And RH steering vehicle is symmetrical.

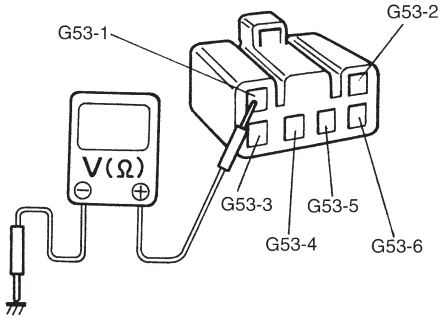

2) Disconnect negative cable at battery.
3) Disconnect rear fog controller (1) coupler and connect negative cable at battery.
4) Check that the voltage and resistance between following terminals are specifications.

Terminals	Condition	Specification
G53-1 and ground	———	10 – 15 V
G53-2 and ground	When headlight switch is in OFF	10 – 15 V
	When headlight switch is in ON	0 V
G53-3 and ground	———	Continuity
	When rear fog light bulb is removed	No continuity
G53-4 and ground	———	Continuity
G53-5 and ground	When rear fog light switch is pushed	10 – 15 V
	When rear fog light switch is free	0 V
G53-6 and ground [If front fog lights are equipped]	When front fog lights come on	10 – 15 V
	When front fog lights do not come on	0 V

If check result is not satisfactory, repair.

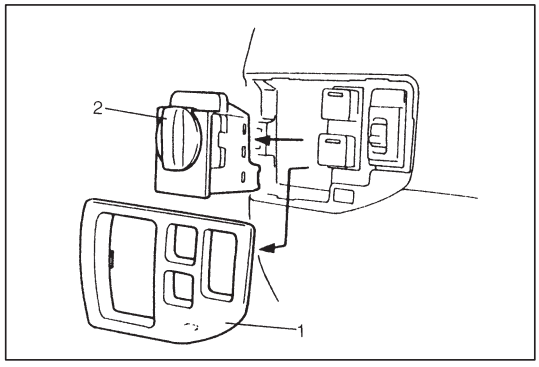

INTERIOR LIGHT

INTERIOR LIGHT SWITCH (IN LIGHTING SWITCH)

REMOVAL

1) Disconnect negative cable at battery.
2) Remove garnish (1) of instrument panel switches.
3) Remove lighting switch (2) from instrument panel.

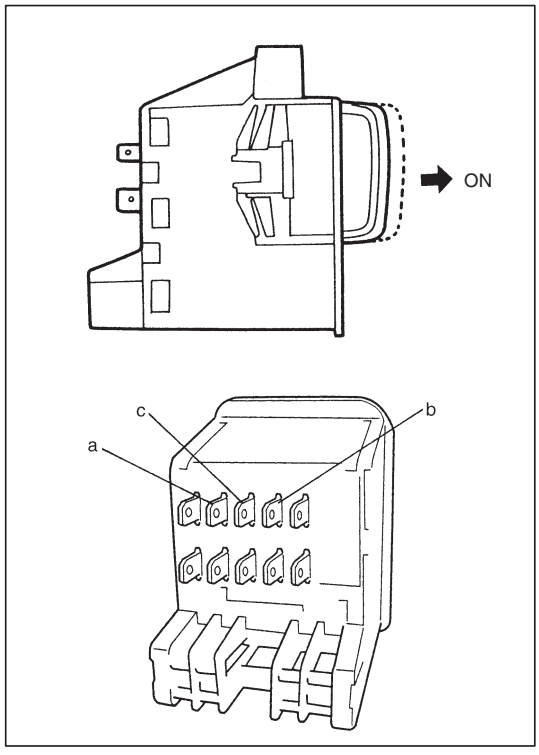

INSPECTION

Check the continuity at each switch position. If any continuity is not obtained, replace switch.

Terminal / Switch Position	a	b	c
OFF		○—⊗	—○
ON	○—	—○—⊗	—○

INSTALLATION

Reverse removal procedure for installation.

SECTION 8C

INSTRUMENTATION/DRIVER INFORMATION

WARNING:
For vehicles equipped with Supplemental Restraint (Air Bag) System:

- **Service on and around the air bag system components or wiring must be performed only by an authorized SUZUKI dealer. Refer to "Air Bag System Components and Wiring Location View" under "General Description" in air bag system section in order to confirm whether you are performing service on or near the air bag system components or wiring. Please observe all WARNINGS and "Service Precautions" under "On-Vehicle Service" in air bag system section before performing service on or around the air bag system components or wiring. Failure to follow WARNINGS could result in unintentional activation of the system or could render the system inoperative. Either of these two conditions may result in severe injury.**
- **Technical service work must be started at least 90 seconds after the ignition switch is turned to the "LOCK" position and the negative cable is disconnected from the battery. Otherwise, the system may be activated by reserve energy in the Sensing and Diagnostic Module (SDM).**

CONTENTS

GENERAL DESCRIPTION

CAUTIONS IN SERVICING

Refer to Section 8.

SYMBOLS AND MARKS

Refer to Section 8.

WIRING COLOR SYMBOLS

Refer to Section 8.

ABBREVIATIONS

Refer to Section 8.

JOINT CONNECTOR

Refer to Section 8.

FUSE BOX AND RELAY

Refer to Section 8.

POWER SUPPLY DIAGRAM

Refer to Section 8.

COMBINATION METER

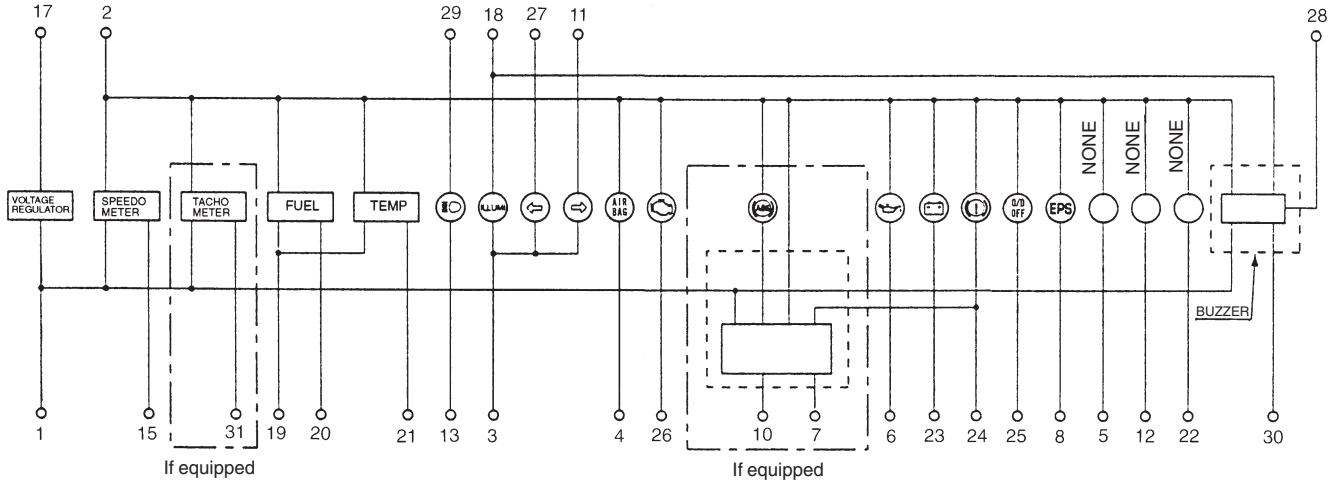

NOTE:
Terminal arrangement of coupler viewed from harness side.

1	2	3	4	5	6	7	8	9	10	11	12	13	14	15	16
17	18	19	20	21	22	23	24	25	26	27	28	29	30	31	32

➡ The upper side of combination meter

Coupler

1.	To ground	B
2.	To ignition switch	B/W
3.	To ground	B
4.	To SDM	Bl
5.	Blank	–
6.	To oil pressure switch	Y/B
7.	To ABS control module	O
8.	To EPS control module	Gr
9.	Blank	–
10.	To ABS control module	Bl/B
11.	To turn and hazard switch	G/Y
12.	Blank	–
13.	To dimmer switch	R
14.	Blank	–
15.	To speed sensor	V
16.	Blank	–
17.	To positive terminal at battery	W/Bl
18.	To lighting switch	R/Y
19.	To ground	Br
20.	To fuel level gauge	Y/R
21.	To ECT sensor	W/G
22.	Blank	–
23.	To generator	W/R
24.	To brake fluid level switch and parking brake switch	Y/G
25.	To A/T control module	Bl/Y
26.	To ECM	V/W
27.	To turn and hazard switch	G/R
28.	To ignition switch (ACC)	Y/B
29.	To positive terminal at battery	W/Bl
30.	To door switch (driver side)	B/O
31.	To ECM	Br/Y
32.	Blank	–

DIAGNOSIS

SPEEDOMETER AND VSS

Trouble	Possible Cause	Correction
Speedometer shows no operation	IG METER fuse blown VSS faulty Speedometer faulty Wiring or grounding faulty	Check fuse Check VSS Check speedometer Repair

FUEL METER AND FUEL GAUGE UNIT

Trouble	Possible Cause	Correction
Fuel meter shows no operation	IG METER fuse blown Fuel gauge unit faulty Fuel meter faulty Wiring or grounding faulty	Check fuse Check fuel gauge unit Check fuel meter Repair

ENGINE COOLANT TEMP. (ECT) METER AND SENSOR

Trouble	Possible Cause	Correction
Engine coolant temp. meter shows no operation	IG METER fuse blown ECT meter faulty ECT sensor faulty Wiring or grounding faulty ECM faulty	Check fuse Check ECT meter Check ECT sensor Repair Check input signal from ECM

OIL PRESSURE LIGHT

Trouble	Possible Cause	Correction
Oil pressure warning light does not light up	Bulb blown IG METER fuse blown Combination meter wiring circuit faulty Oil pressure switch faulty Wiring or grounding faulty	Check bulb Check fuse Check wiring circuit Check oil pressure switch Repair

BRAKE WARNING LIGHT

Trouble	Possible Cause	Correction
Brake warning light does not light up	Bulb blown IG METER fuse blown Combination meter wiring circuit faulty Parking brake switch faulty Brake fluid level switch faulty Wiring or grounding faulty	Check bulb Check fuse Check combination meter wiring circuit Check parking brake switch Check brake fluid level switch Repair

LIGHT REMAINDER WARNING BUZZER

Trouble	Possible Cause	Correction
Light remainder warning buzzer does not sound	LICENCE fuse blown Buzzer faulty Wiring or grounding faulty Driver or passenger door switch faulty Lighting switch faulty Position light relay faulty D.R.L. controller faulty	Check fuse Replace buzzer Repair Check door switch Check switch Replace relay Check controller. Refer to “D.R.L. CONTROLLER” of HEADLIGHTS in Section 8B

IGNITION KEY REMAINDER WARNING BUZZER

Trouble	Possible Cause	Correction
Ignition key remainder warning buzzer does not sound	DOME fuse blown Buzzer faulty Wiring or grounding faulty Driver or passenger door switch faulty	Check fuse Replace buzzer Repair Check door switch

CIGARETTE LIGHTER AND ACCESSORY SOCKET

Trouble	Possible Cause	Correction
Cigarette lighter/ accessory socket shows no operation	CIGAR/ACC fuse blown Ignition switch faulty Cigarette lighter/accessory socket faulty Wiring or grounding faulty	Check fuse Check ignition switch Check cigarette lighter/accessory socket Repair

ON-VEHICLE SERVICE

IGNITION (MAIN) SWITCH

INSPECTION

1) Disconnect negative cable at battery.
2) Disable air bag system. Refer to DISABLING AIR BAG SYSTEM in Section 10B.
3) Remove steering column cover. Refer to step 5) of CONTACT COIL CABLE ASSEMBLY REMOVAL in Section 3C.

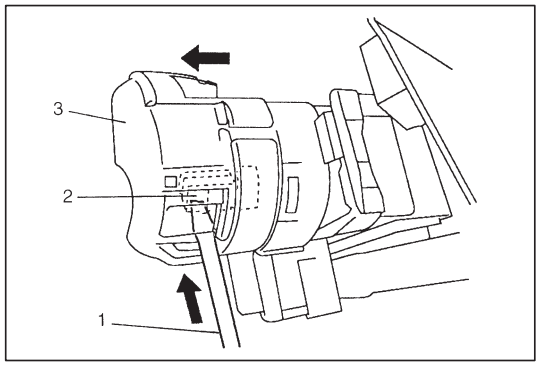

4) Disconnect ignition (main) switch coupler as follows.
   a) Turn ignition switch key to “ACC” position.
   b) Insert screw driver (1) through coupler hole.
   c) Unlock coupler lock (2) by pushing it in arrow direction with screw driver (1).
   d) With unlocked, disconnect ignition (main) switch coupler (3).

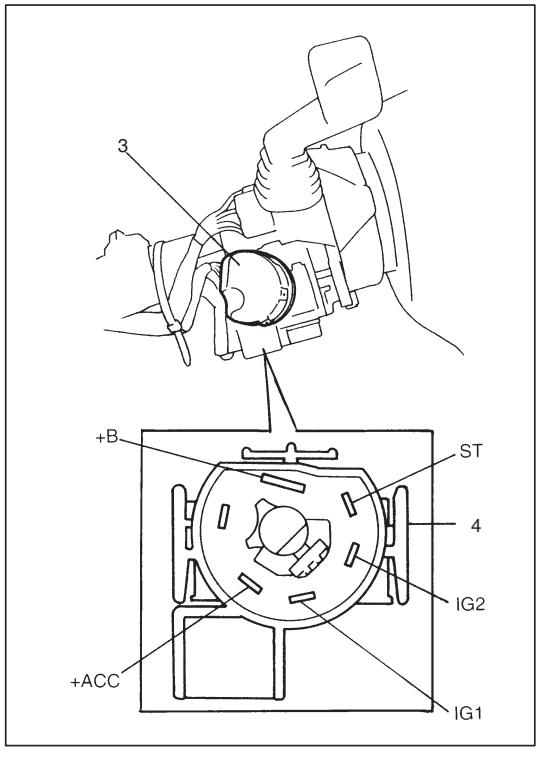

5) Check continuity between terminals at each switch position. If continuity is not obtained according to the table below, replace ignition (main) switch (4).

Key \ Position \ Terminal		+B	+ACC	IG1	IG2	ST
OUT	LOCK	○				
IN	ACC	○	○			
IN	ON	○	○	○	○	
IN	ST	○	○	○		○

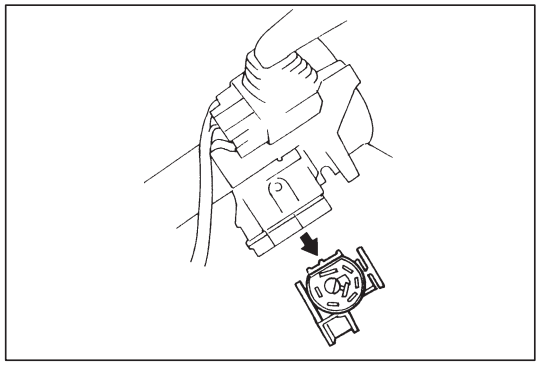

REMOVAL

1) Remove ignition switch cylinder assembly. Refer to step 5) of STEERING COLUMN REMOVAL in Section 3C.
2) Remove ignition (main) switch from steering column.

INSTALLATION

1) Install ignition (main) switch to steering column.
2) Install ignition switch cylinder assembly. Refer to step 5) of STEERING COLUMN INSTALLATION in Section 3C.
3) Connect ignition (main) switch coupler.
4) Connect negative cable at battery.
5) Enable air bag system. Refer to ENABLING AIR BAG SYSTEM in Section 10B.

COMBINATION METER

REMOVAL

1) Disconnect negative cable at battery.
2) Disable air bag system. Refer to DISABLING AIR BAG SYSTEM in Section 10B.

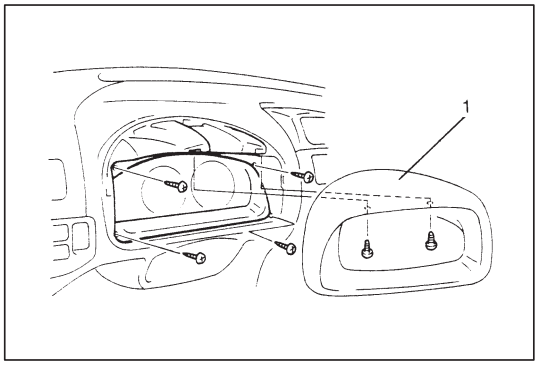

3) Remove instrument cluster panel (1).
4) Remove screws fastening combination meter.
5) Pull combination meter from instrument panel.

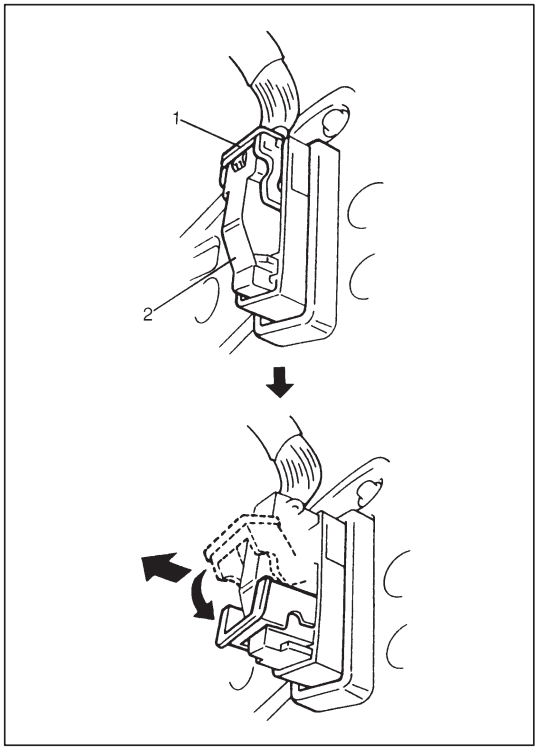

6) Turn lever (1) locking combination meter coupler (2) and disconnect coupler (2).

INSTALLATION

Reverse removal procedure for installation, noting the following.

- Be sure to enable air bag system after installation. Refer to ENABLING AIR BAG SYSTEM in Section 10B for details.

SPEEDOMETER AND SENSOR

VEHICLE SPEED SENSOR (VSS)

Refer to VEHICLE SPEED SENSOR (VSS) in Section 7A.

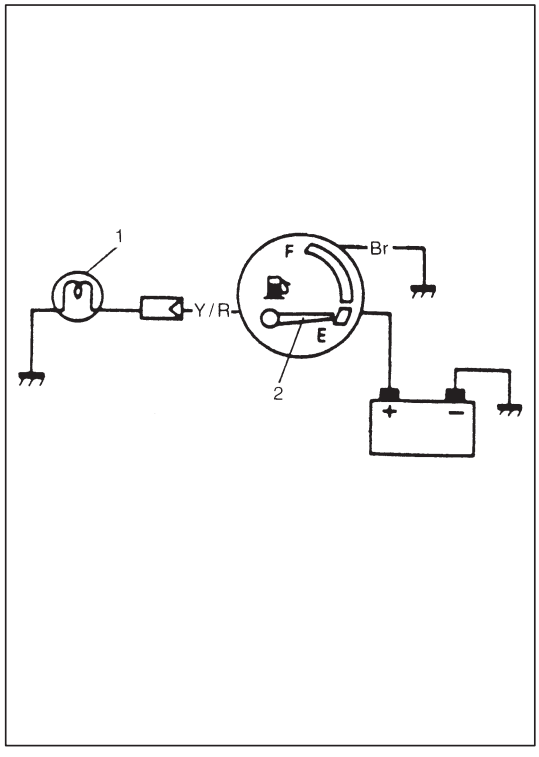

FUEL METER/FUEL GAUGE UNIT

FUEL METER

INSPECTION

1) Disconnect Y/R lead wire going to gauge unit.
2) Turn ignition switch ON, and check that fuel meter indicates E.
3) Turn ignition switch OFF.
4) Ground Y/R lead through a 3.4 W test bulb (1) as illustrated.
5) Turn ignition switch ON and check that bulb light up and pointer (2) moves to F side.
6) If fuel meter shows no operation, replace.

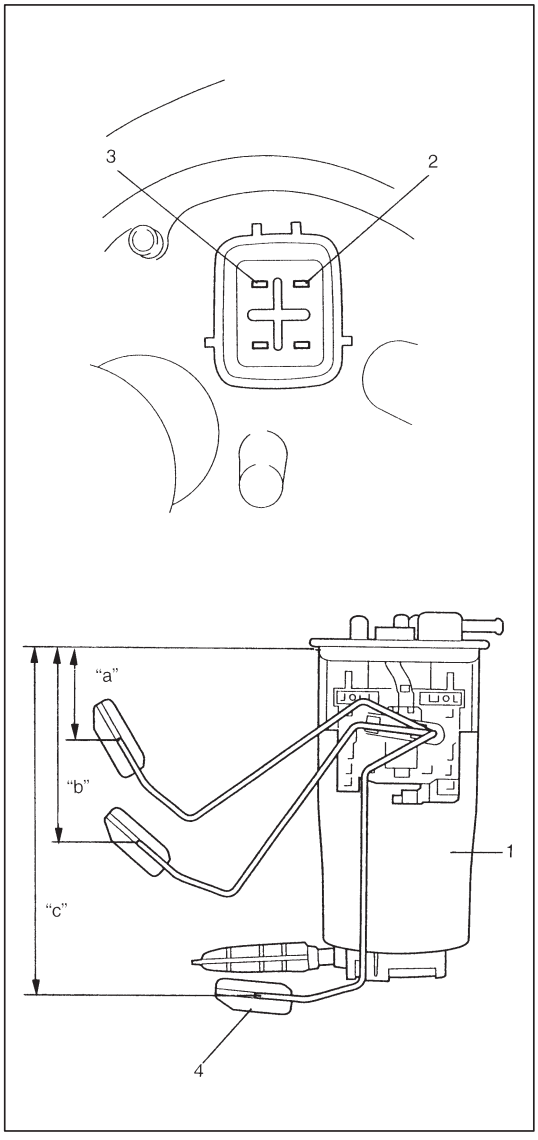

FUEL SENDER GAUGE

INSPECTION

1) Remove fuel tank. Refer to FUEL TANK REMOVAL in Section 6C.
2) Remove fuel pump assembly (1). Refer to FUEL PUMP ASSEMBLY REMOVAL in Section 6C.
3) Check the resistance between terminals (2) and (3) of fuel sender gauge under the following each float (4) position.

Float Position		Resistance (Ω)
Full Upper "a"	56 mm (2.20 in.)	38 – 42
Middle (1/2) "b"	119.2 mm (4.69 in.)	157 – 163
Full Lower "c"	200.5 mm (7.89 in.)	276 – 284

If measured resistance is out of specification, replace.

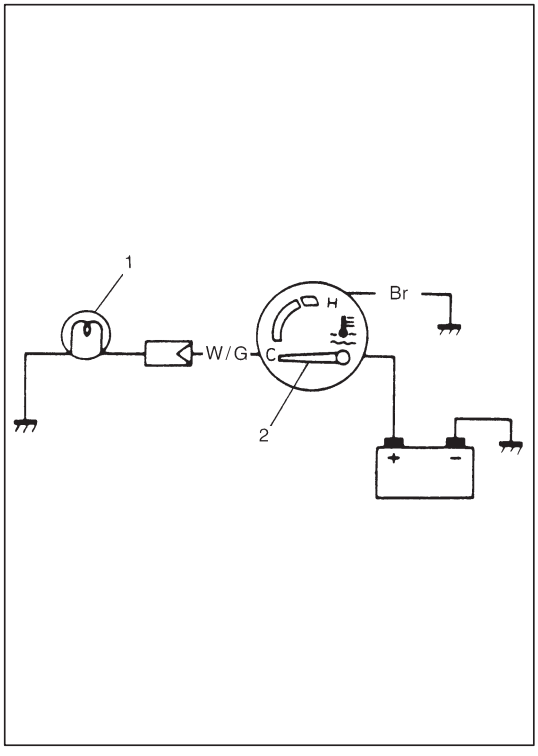

ENGINE COOLANT TEMP. (ECT) METER AND SENSOR

ENGINE COOLANT TEMP. (ECT) METER

INSPECTION

1) Disconnect W/G lead wire going to ECT sensor.
2) Turn ignition switch ON, and check that ECT meter indicates COOL.
3) Turn ignition switch OFF.
4) Ground W/G lead wire through a 3.4 W test bulb (1) as illustrated.
5) Turn ignition switch ON, and check that bulb light up and pointer (2) moves to hot side.

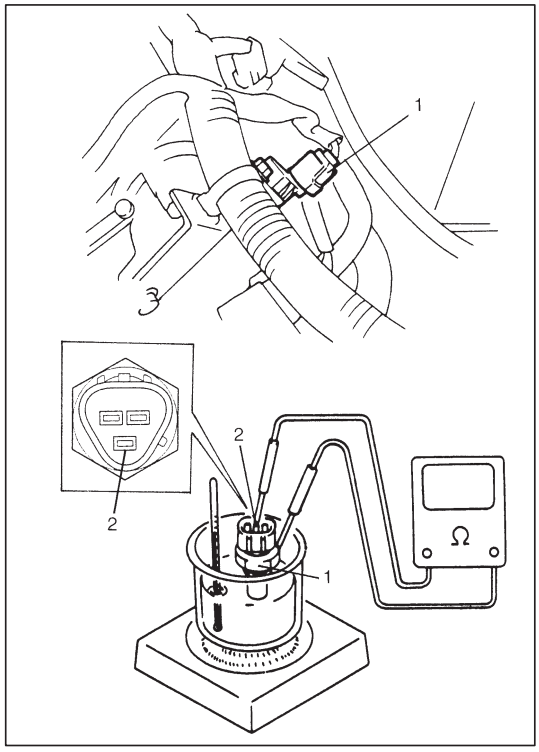

ENGINE COOLANT TEMP. (ECT) SENSOR FOR METER

WARNING:
- **Make sure that engine coolant temperature is cold before removing any part of cooling system.**
- **Also be sure to disconnect negative (–) cable at battery before removing any part.**

REMOVAL AND INSTALLATION

Refer to ENGINE COOLANT TEMPERATURE SENSOR in Section 6E.

INSPECTION

Warm up ECT sensor (1). Thus make sure ECT sensor for meter (2) resistance is decreased with increase of its temperature.

Temperature	Resistance
50°C (122°F)	136 – 216 Ω
120°C (248°F)	16.4 – 19.4 Ω

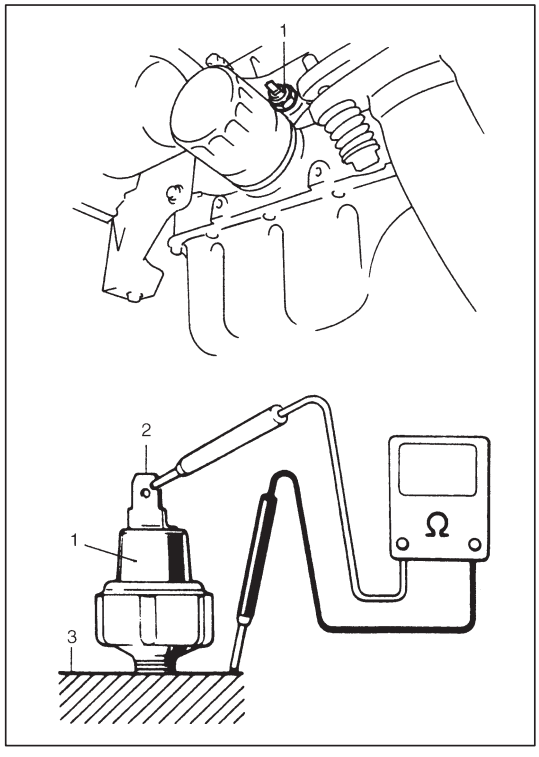

OIL PRESSURE WARNING LIGHT

OIL PRESSURE SWITCH

INSPECTION

1) Disconnect oil pressure switch (1) lead wire.
2) Check continuity between oil pressure switch terminal (2) and cylinder block (3) as shown.

During Engine Running	No continuity
At Engine Stop	Continuity

If not, replace oil pressure switch (1).

REMOVAL AND INSTALLATION

Refer to OIL PRESSURE CHECK in Section 6A1.

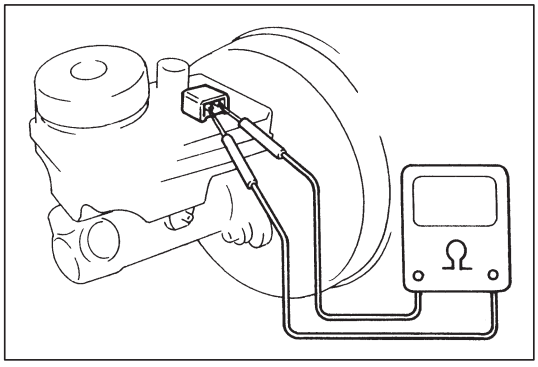

BRAKE WARNING LIGHT

BRAKE FLUID LEVEL SWITCH

INSPECTION

Check switch for continuity.
If found defective, replace switch (reservoir).

OFF position (float up)	No continuity
ON position (float down)	Continuity

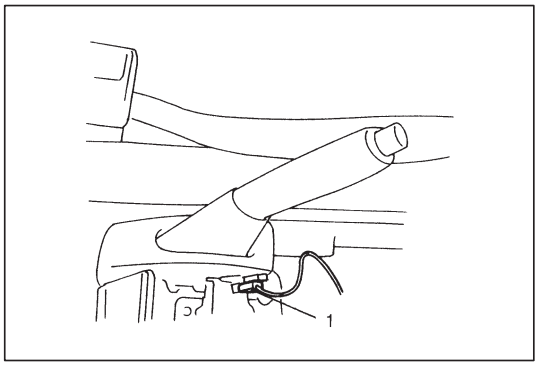

PARKING BRAKE SWITCH

INSPECTION

Check switch (1) for continuity.
If found defective, replace switch (1).

OFF position (parking brake lever released)	No continuity
ON position (parking brake lever pulled up)	Continuity

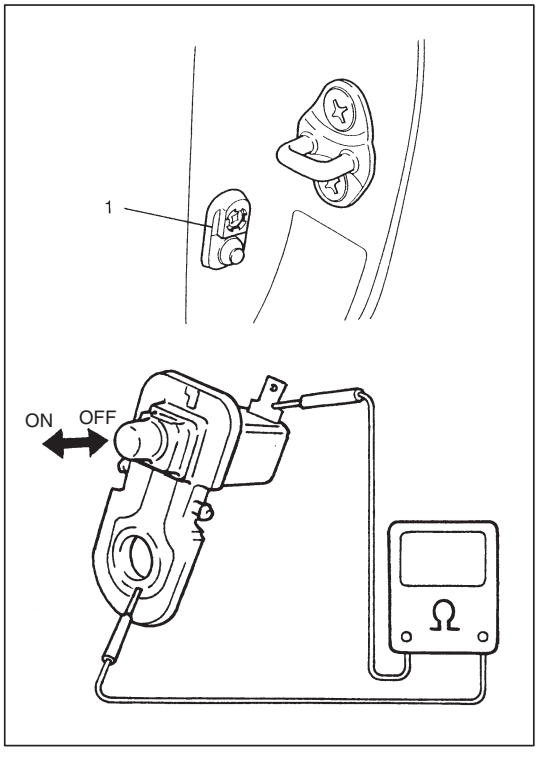

DOOR SWITCH

INSPECTION

1) Remove door switch (1).
2) Check switch (1) for continuity.
   If found defective, replace switch (1).

OFF position (Door closed)	No continuity
ON position (Door open)	Continuity

IGNITION KEY REMAINDER/LIGHT REMAINDER WARNING BUZZER

REMOVAL AND INSTALLATION

Refer to COMBINATION METER in this section.

SECTION 8D

WINDOWS, MIRRORS, SECURITY AND LOCKS

WARNING:
For vehicles equipped with Supplemental Restraint (Air Bag) System:

- **Service on and around the air bag system components or wiring must be performed only by an authorized SUZUKI dealer. Refer to "Air Bag System Components and Wiring Location View" under "General Description" in air bag system section in order to confirm whether you are performing service on or near the air bag system components or wiring. Please observe all WARNINGS and "Service Precautions" under "On-Vehicle Service" in air bag system section before performing service on or around the air bag system components or wiring. Failure to follow WARNINGS could result in unintentional activation of the system or could render the system inoperative. Either of these two conditions may result in severe injury.**
- **Technical service work must be started at least 90 seconds after the ignition switch is turned to the "LOCK" position and the negative cable is disconnected from the battery. Otherwise, the system may be activated by reserve energy in the Sensing and Diagnostic Module (SDM).**

CONTENTS

GENERAL DESCRIPTION

CAUTIONS IN SERVICING

Refer to Section 8.

SYMBOLS AND MARKS

Refer to Section 8.

WIRING COLOR SYMBOLS

Refer to Section 8.

ABBREVIATIONS

Refer to Section 8.

JOINT CONNECTOR

Refer to Section 8.

FUSE BOX AND RELAY

Refer to Section 8.

POWER SUPPLY DIAGRAM

Refer to Section 8.

WINDSHIELD WIPER AND WASHER

FRONT WIPER AND WASHER

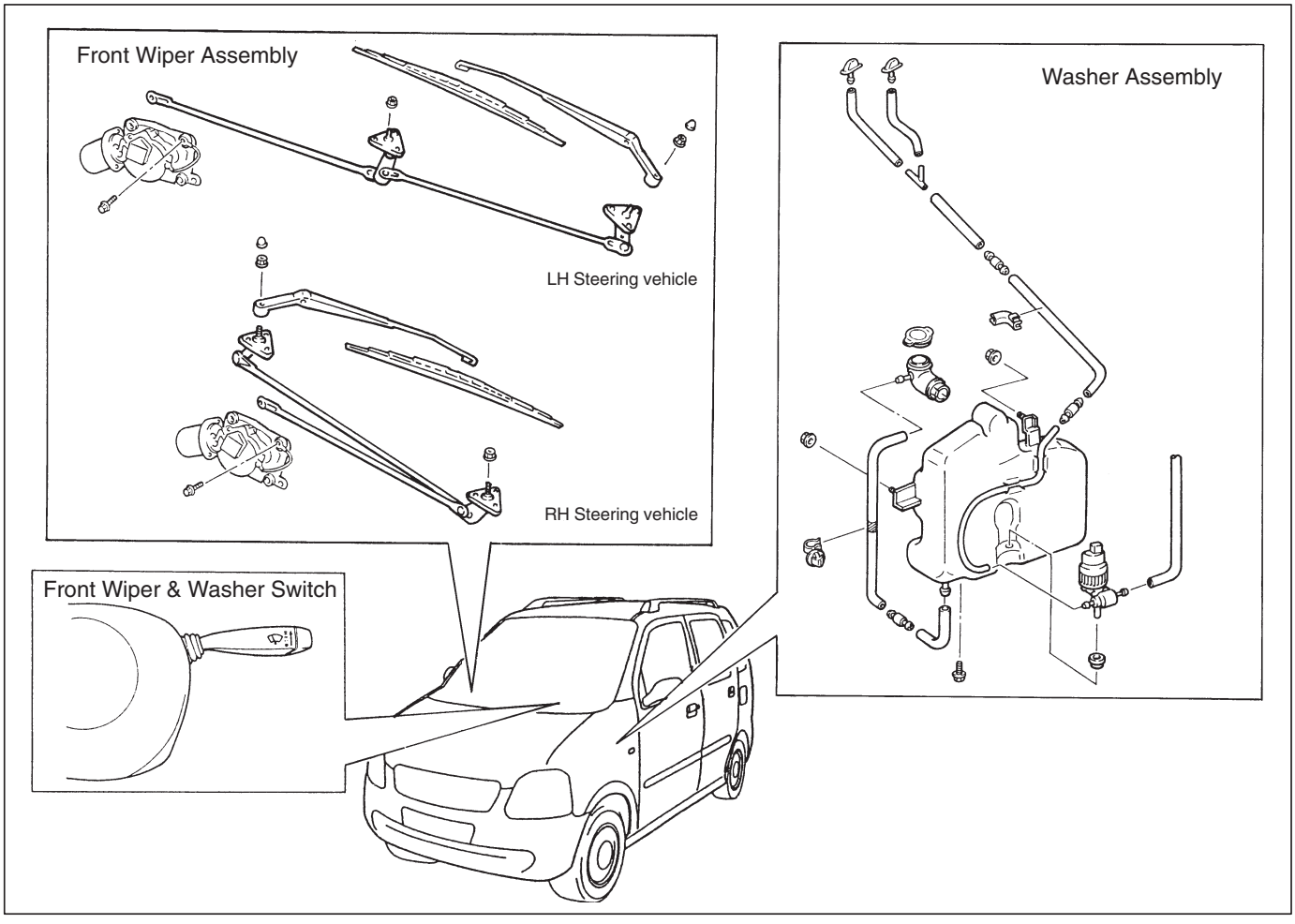

REAR WIPER AND WASHER

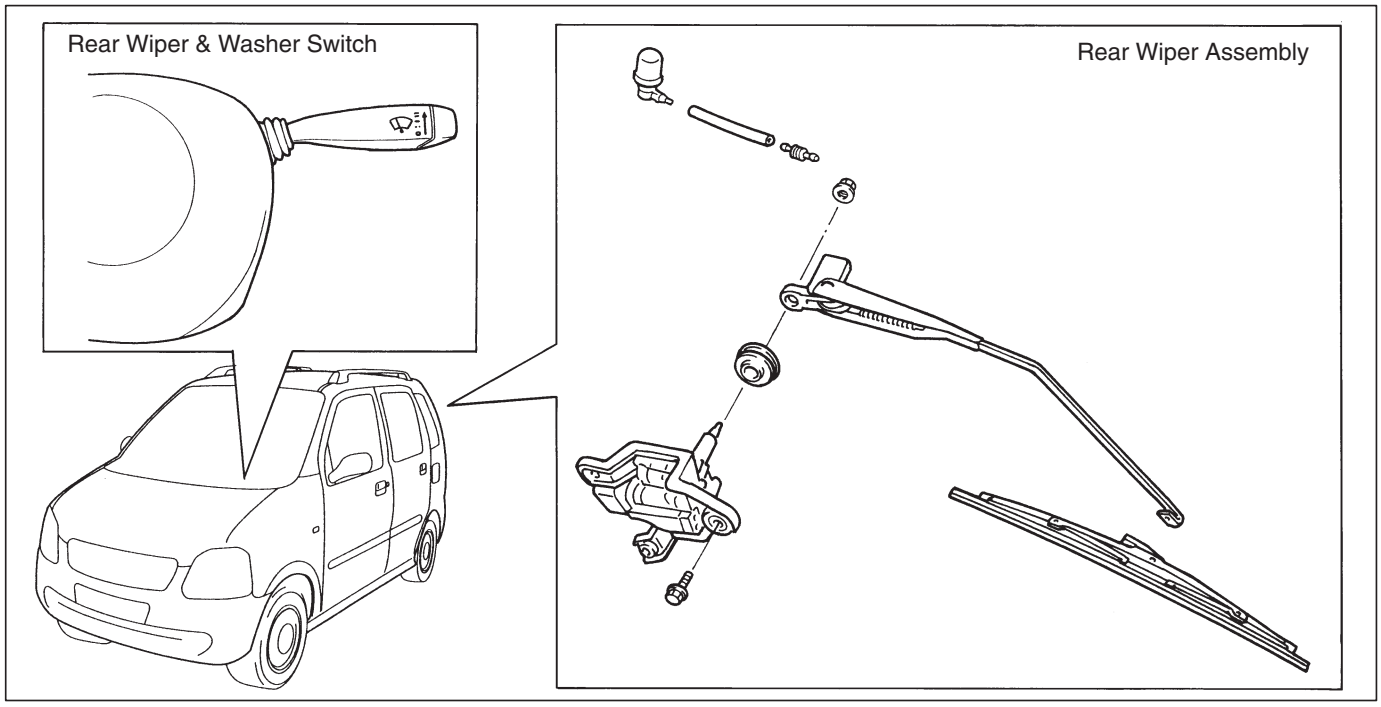

POWER DOOR LOCK SYSTEM (IF EQUIPPED)

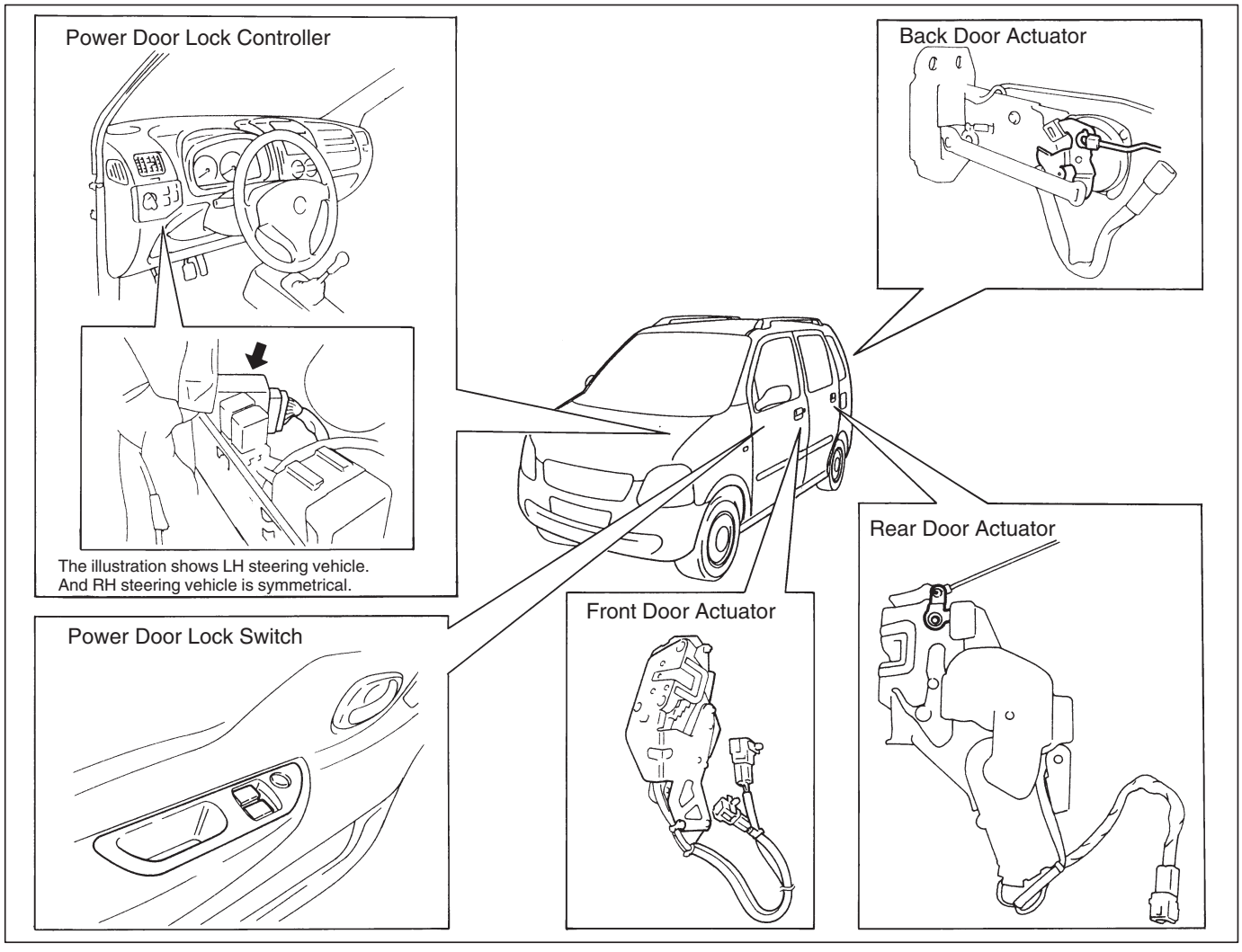

DIAGNOSIS

WINDSHIELD WIPER AND WASHER

FRONT WIPER AND WASHER

Trouble	Possible cause	Correction
Wiper does not operate or move at a specified speed	● WIPER WASHER fuse blown ● Wiper motor faulty ● Wiper switch faulty ● Wiring or grounding faulty	Replace blown fuse to check for short Check motor Check switch Repair
Wiper does not return to original position	● Wiper motor faulty ● Wiper switch faulty ● Intermittent timer faulty ● Wiring or grounding faulty	Check motor Check switch Check timer Repair
Only intermittent wiper does not operate	● Wiper switch faulty ● Intermittent timer faulty ● Wiring or grounding faulty	Check switch Check timer Repair
Washer and wiper does not operate when washer switch is in ON	● Washer hose or nozzle clogged ● Washer motor faulty ● Washer switch faulty ● Intermittent timer faulty ● Wiring or grounding faulty	Repair Check motor Check switch Check timer Repair

REAR WIPER AND WASHER

Trouble	Possible cause	Correction
Wiper does not operate or does not return to original position	● WIPER WASHER fuse blown ● Wiper motor faulty ● Wiper switch faulty ● Wiring or grounding faulty	Replace blown fuse to check for short Check motor Check switch Repair
Washer malfunctions	● Washer hose or nozzle clogged ● Washer motor faulty ● Washer switch faulty ● Wiring faulty	Repair Check motor Check switch Repair

REAR WINDOW DEFOGGER

Trouble	Possible cause	Correction
Defogger does not work	● REAR DEFG fuse blown ● HEATER fuse blown ● Defogger switch faulty ● Defogger heat wire faulty ● Defogger relay faulty ● Wiring or grounding faulty	Replace fuse to check for short Replace fuse to check for short Check switch Check heat wire Replace relay Repair as necessary

POWER WINDOW CONTROL SYSTEM (IF EQUIPPED)

Trouble	Possible cause	Correction
None of power windows functions	● POWER WINDOW fuse blown ● Ignition switch faulty ● Wiring or grounding faulty	Replace fuse to check for short Check switch Repair as necessary
Only one power window does not function	● Power window main switch faulty ● Power window sub switch faulty ● Power window motor (actuator) faulty ● Wiring or grounding faulty	Check switch Check switch Check motor Repair as necessary

POWER DOOR LOCK SYSTEM (IF EQUIPPED)

Condition	Possible cause	Correction
All power door locks do not operate as interlocked with door lock key	● DOOR LOCK fuse blown ● Power door lock controller faulty ● Wiring or grounding faulty	Replace fuse to check for short Replace controller Repair as necessary
Power door locks do not operate by power door lock switch	● Power door lock switch faulty ● Power door lock controller faulty ● Wiring or grounding faulty	Check switch Replace controller Repair as necessary
Only one power door lock does not operate	● Actuator (door lock motor) faulty ● Wiring or grounding faulty	Check actuator Repair as necessary
Only front power door locks or only rear power door locks do not operate	● Wiring faulty	Repair as necessary

POWER DOOR MIRROR CONTROL SYSTEM (IF EQUIPPED)

Condition	Possible cause	Correction
All power mirrors do not operate	● ACC fuse blown ● Power door mirror switch faulty ● Wiring or grounding faulty	Replace fuse to check for short Check switch Repair as necessary
One power mirror does not operate	● Power door mirror switch faulty ● Actuator (power door mirror motor) faulty ● Wiring or grounding faulty	Check switch Check actuator Repair as necessary

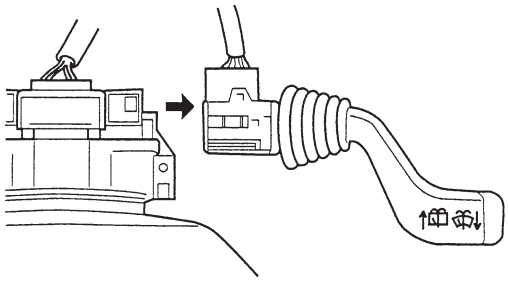

ON-VEHICLE SERVICE

WINDSHIELD WIPER AND WASHER

FRONT WIPER AND WASHER SWITCH

REMOVAL

1) Disconnect negative cable at battery.
2) Remove steering column cover. Refer to step 5) of CONTACT COIL CABLE ASSEMBLY REMOVAL in Section 3C.
3) Pull out wiper and washer switch assembly.
4) Disconnect wiper and washer switch lead wire coupler.

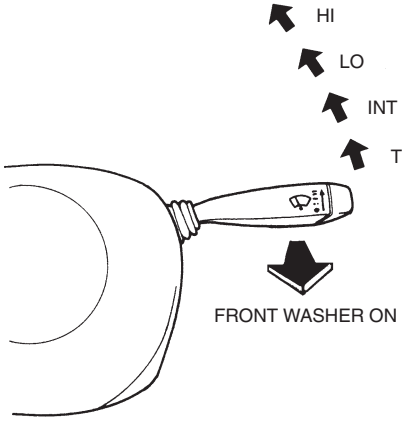

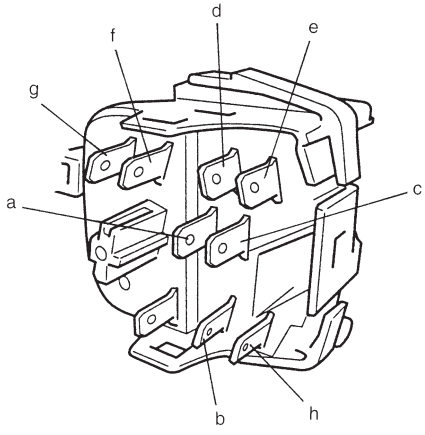

INSPECTION

Check the continuity at each switch position. If any continuity is not obtained, replace switch.

Front wiper switch

Position \ Terminal	a	b	c	d	e
OFF			○	○	
T	○		○	○	○
INT	○		○	○	○
LO	○	○	○		
HI	○	○			

Front washer switch

Position \ Terminal	a	f	g	h
OFF		○	○	
ON	○	○	○	○

INSTALLATION

1) Connect wiper and washer switch lead wire coupler.
2) Push wiper and washer switch assembly into steering column till it clicks.
3) Install steering column cover. Reverse removal procedure.

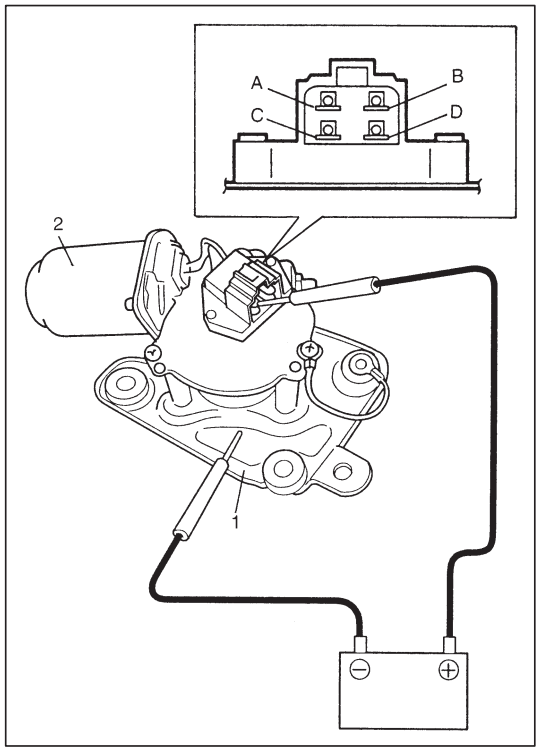

FRONT WIPER MOTOR

INSPECTION

1) As illustrated, use a 12 V battery to connect its (+) terminal to terminal “A” and its (–) terminal to bracket (1) (wiper ground).
   If motor (2) rotates at a low revolution speed of 45 to 55 rpm, it is proper. For high speed check, connect battery (+) terminal to terminal “B”, and its (–) terminal to bracket (1) (wiper ground). If motor (2) rotates at a high revolution speed of 67 to 83 rpm, it is proper.

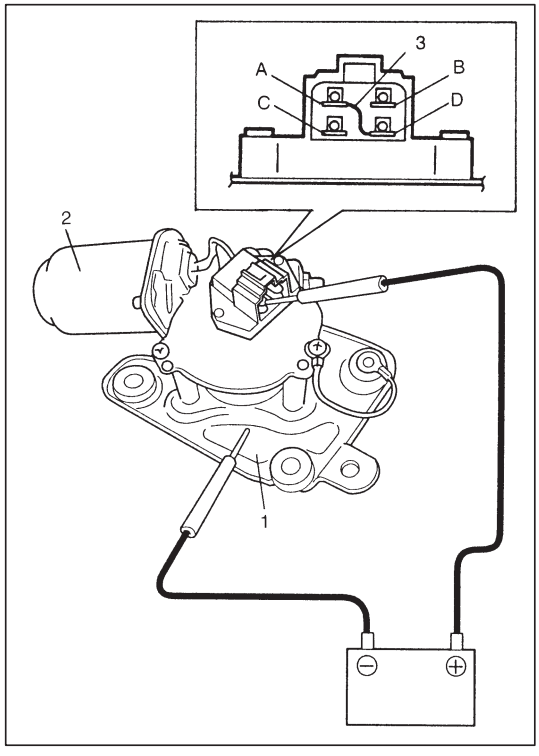

2) Testing automatic stop action.
   a) Connect 12 V battery (+) terminal to terminal “A” and its (–) terminal to bracket (1) (wiper ground), and let the motor (2) turn.
   b) Disconnect terminal “A” from battery, and let the motor (2) stop.
   c) Connect terminal “A” and “D” with a jumper wire (3), and connect terminal “C” to battery (+) terminal. Observe the motor (2) turns once again then stops at a given position.
   d) Repeat a) thru c) several times and inspect if the motor (2) stops at the given position every time.

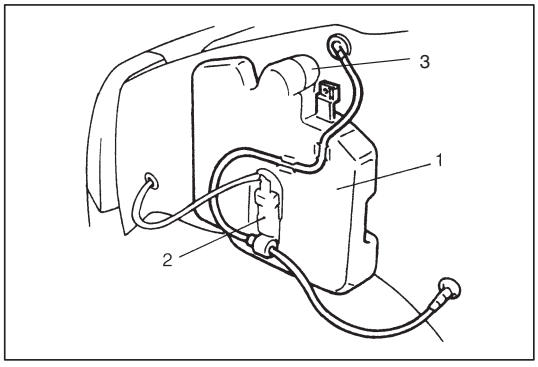

FRONT AND REAR WASHER PUMP

REMOVAL

1) Disconnect negative cable at battery.
2) Remove front fender lining (LH).
3) Remove inlet pipe (3) from washer tank (1).
4) Remove washer tank (1) fitting nuts.
5) Disconnect pump (2) lead wires and hoses.
6) Remove washer tank (1).
7) Remove pump (2) from tank (1).

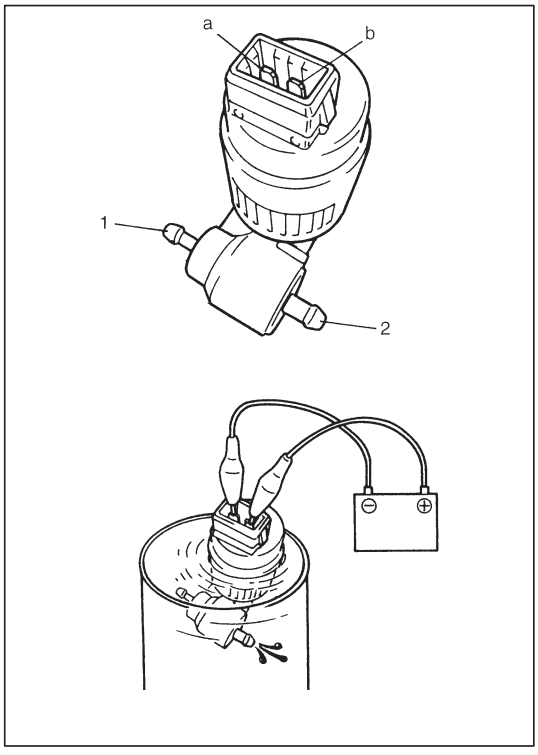

INSPECTION

1) Connect battery (+) terminal to pump (a) terminal, and battery (–) terminal to pump (b) terminal.
   Check that water jets from front washer side (1).
2) Connect battery (+) terminal to pump (b) terminal, and battery (–) terminal to pump (a) terminal.
   Check that water jets from rear washer side (2).

INSTALLATION

Reverse removal procedure for installation.

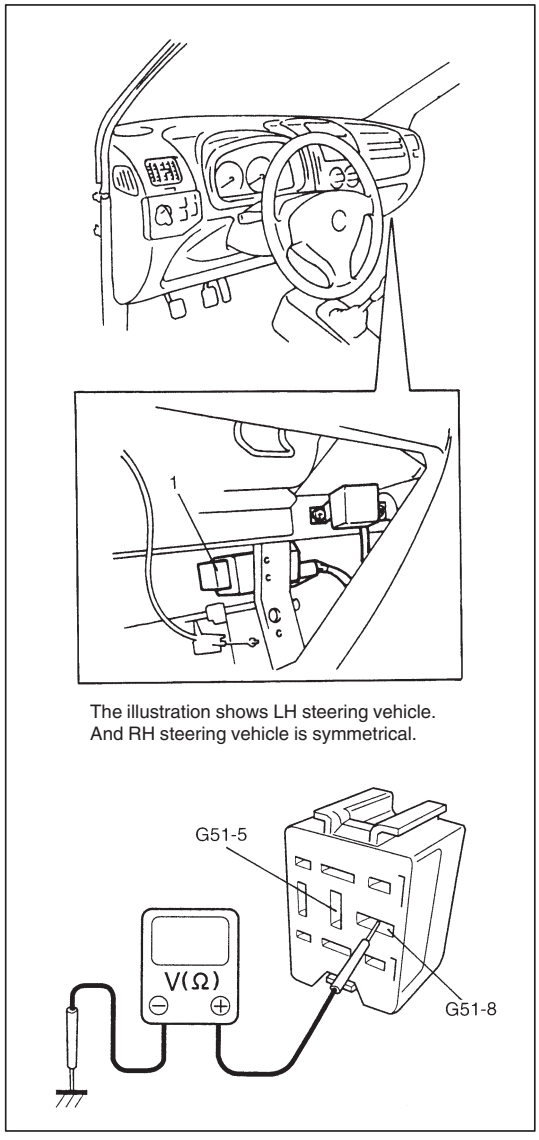

The illustration shows LH steering vehicle.
And RH steering vehicle is symmetrical.

AUTO STOP CIRCUIT

INSPECTION

1) Check that wiper motor operates with the wiper switch at low position.
2) Disconnect negative cable at battery.
3) Disable air bag system. Refer to DISABLING AIR BAG SYSTEM in Section 10B.
4) Pull out intermittent timer (1) and disconnect coupler, and connect negative cable at battery.
5) Check that the voltage and resistance between following terminals are specification.

Terminals	Condition	Specification
G51-8 and ground	———	Continuity
G51-5 and ground	When wiper blades are stopped at windshield base.	Continuity
	Turn ignition switch to ON. Turn wiper switch to ON then to OFF so that wiper blades stop at the position except starting/returning point.	10 – 15 V

If check result is not satisfactory, repair and recheck.

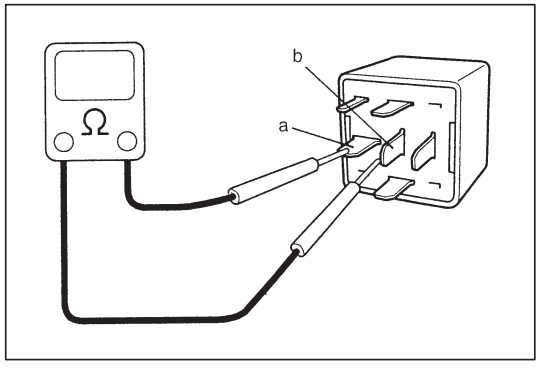

6) Check the continuity between terminals “a” and “b” of intermittent timer. If continuity is not obtain, replace intermittent timer and recheck.

7) After intermittent lead wire coupler is connected and intermittent timer is installed, enable air bag system. Refer to ENABLING AIR BAG SYSTEM in Section 10B.

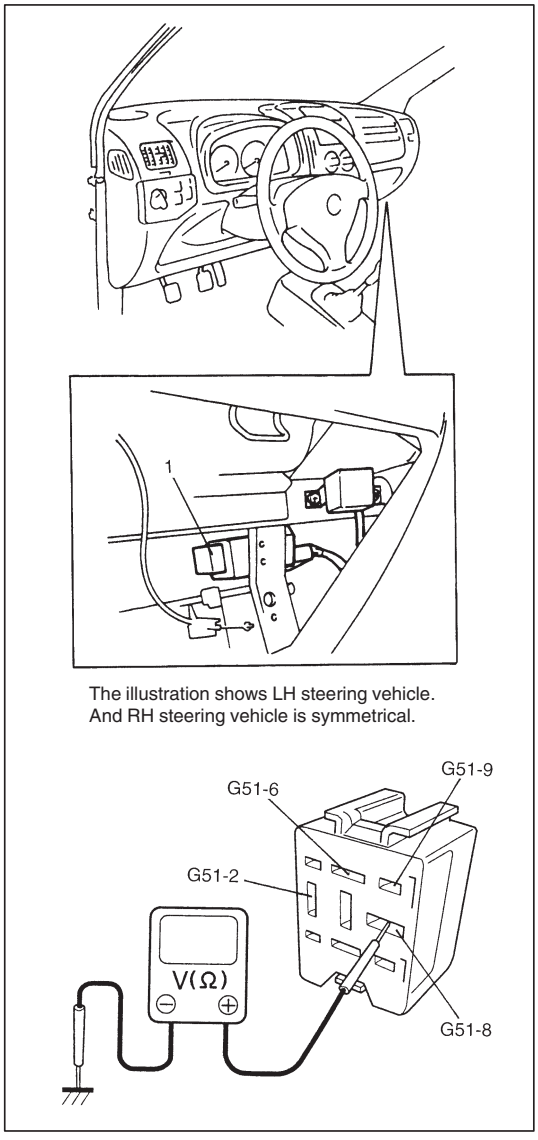

INTERMITTENT CIRCUIT

INSPECTION

1) Check that wiper motor operates with the wiper switch at low position, and return to original position with the wiper switch turned OFF.
2) Disconnect negative cable at battery.
3) Disable air bag system. Refer to DISABLILNG AIR BAG SYSTEM in Section 10B.
4) Pull out intermittent timer (1) and disconnect coupler, and connect negative cable at battery.
5) Check that the voltage and resistance between following terminals are specifications.

Terminals	Condition	Specification
G51-2 and ground	When ignition switch is in OFF.	0 V
	When ignition switch is in ON.	10 – 15 V
G51-6 and ground	———	Continuity
G51-8 and ground	———	Continuity
G51-9 and ground	When ignition switch is in ON and wiper switch is in OFF.	0 V
	When ignition switch is in ON and wiper switch is in intermittent position.	10 – 15 V

If check result is not satisfactory, repair.

REFERENCE:
The wiper motor operates the wiper arms at an interval of approximately 6 seconds per one operation at low speed.

6) After intermittent lead wire coupler is connected and intermittent timer is installed, enable air bag system. Refer to ENABLING AIR BAG SYSTEM in Section 10B.

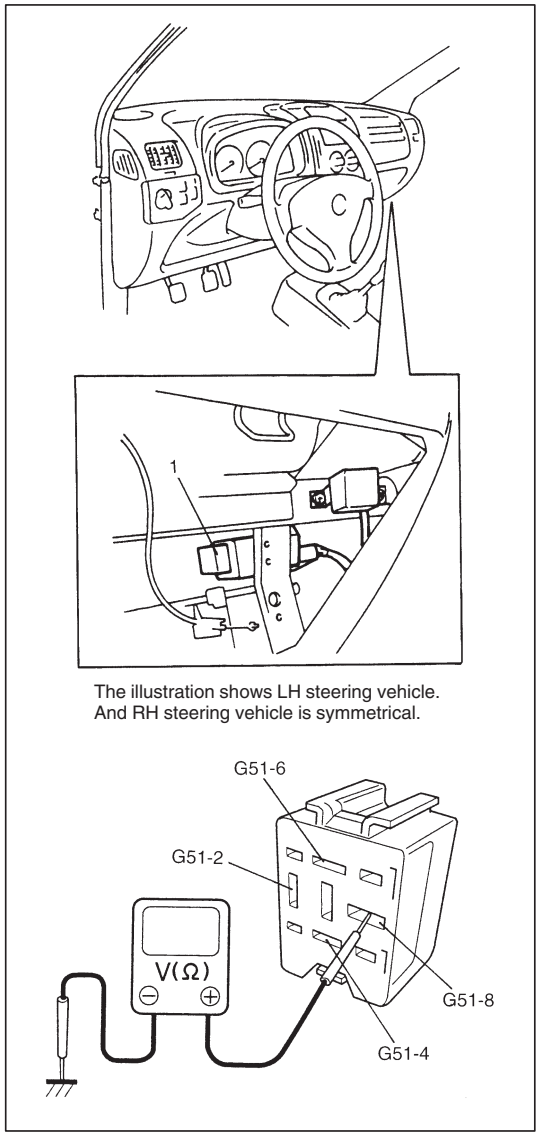

WASHER LINKED CIRCUIT

INSPECTION

1) Check that wiper motor operates with the wiper switch at low position, and return to original position with the wiper switch turned OFF.
2) Disconnect negative cable at battery.
3) Disable air bag system. Refer to DISABLING AIR BAG SYSTEM in Section 10B.
4) Pull out intermittent timer (1) and disconnect coupler, and connect negative cable at battery.
5) Check that the voltage and resistance between following terminals are specification.

Terminals	Condition	Specification
G51-2 and ground	When ignition switch is in OFF.	0 V
	When ignition switch is in ON.	10 – 15 V
G51-6 and ground	———	Continuity
G51-8 and ground	———	Continuity
G51-4 and ground	When ignition switch is in ON and washer switch is in OFF.	0 V
	When ignition switch is in ON and washer switch is in ON.	10 – 15 V

If check result is not satisfactory, repair.

REFERENCE:
When front washer switch is in ON position for one second or more and then turned OFF, the wiper motor operates at low speed for approximately 5 seconds after front washer switch is turned OFF.

6) After intermittent lead wire coupler is connected and intermittent timer is installed, enable air bag system. Refer to ENABLING AIR BAG SYSTEM in Section 10B.

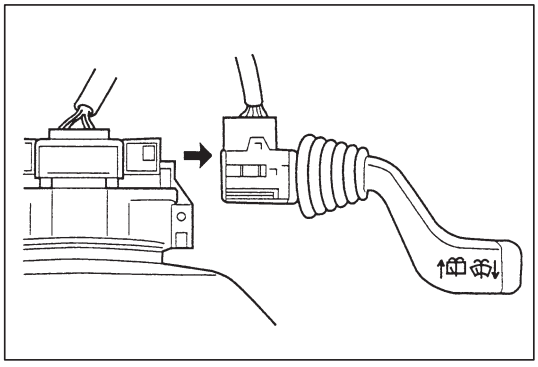

REAR WIPER AND WASHER SWITCH

REMOVAL

1) Disconnect negative cable at battery.
2) Remove steering column cover. Refer to step 5) of CONTACT COIL CABLE ASSEMBLY REMOVAL in Section 3C.
3) Pull out wiper and washer switch assembly.
4) Disconnect wiper and washer switch lead wire coupler.

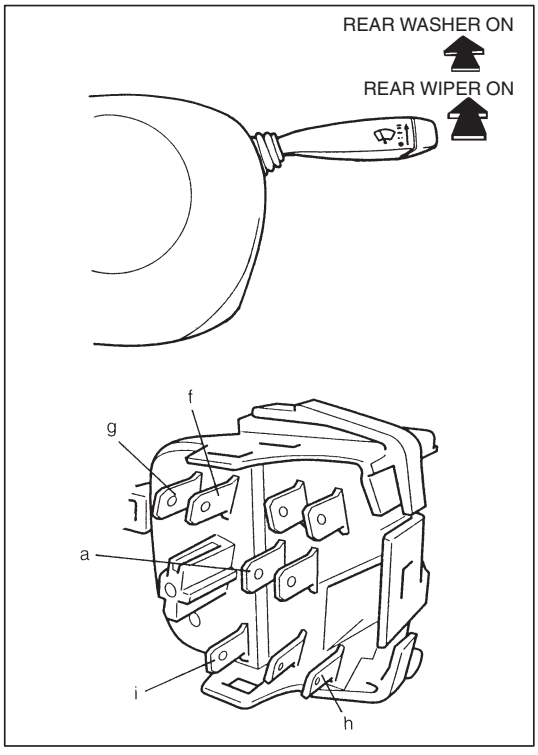

INSPECTION

Check the continuity at each switch position. If any continuity is not obtained, replace switch.

Position \ Terminal	a	i	f	g	h
OFF			○——	——○	
ON	○——	——○		○——	——○
RR WASHER	○——	——○	——○	○——	——○

INSTALLATION

1) Connect wiper and washer switch lead wire coupler.
2) Push wiper and washer switch assembly into steering column till it clicks.
3) Install steering column cover. Reverse removal procedure.

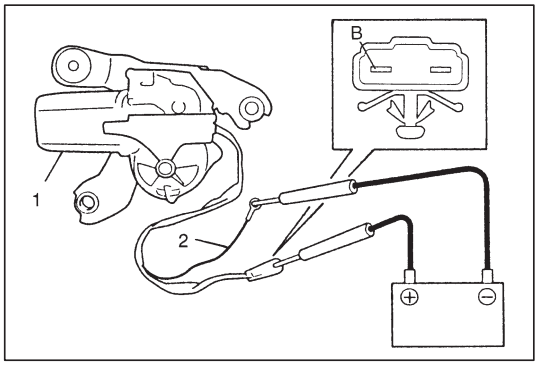

REAR WIPER MOTOR

INSPECTION

1) TESTING WIPER MOTOR
   As shown left, use a 12 V battery to connect its (+) terminal to terminal “B”, and its (–) terminal to black lead wire (2). Then motor (1) should rotate at 35 to 45 rpm.

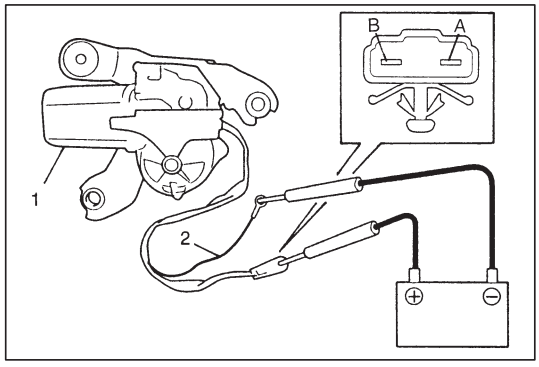

2) TESTING AUTOMATIC STOP ACTION
   a) First, connect battery (+) terminal to terminal “B” and its (–) terminal to black lead wire (2), and let the motor (1) turn.
   b) Then disconnect terminal “B” from battery and let the motor (1) stop.
   c) Next connect terminal “A” to battery (+) terminal. Observe the wiper motor (1) turns once again, then stops at a given position.
   d) Repeat these steps several times, and inspect if the motor (1) stops at the given position every time.

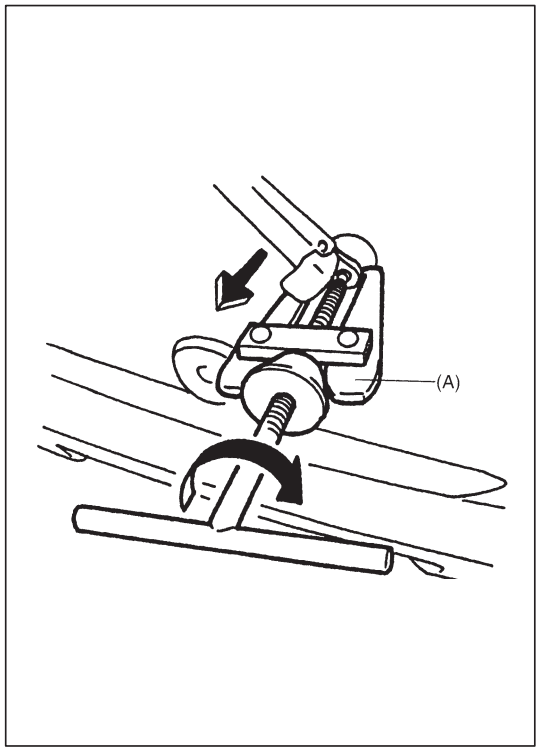

REAR WIPER ARM

REMOVAL

1) Remove rear wiper arm mounting nut.
2) Remove wiper arm and blade assembly by using special tool as shown.

Special Tool
(A): 09913-60910

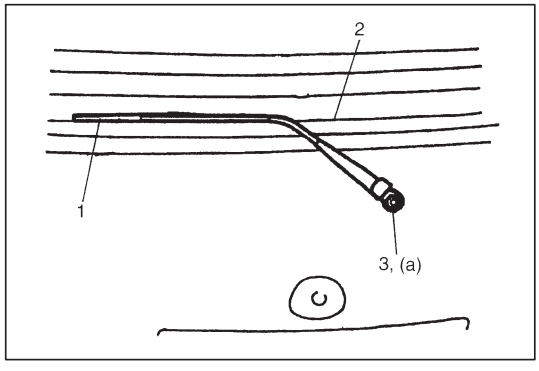

INSTALLATION

1) Install rear wiper arm and blade assembly.
2) The wiper blade (1) set down alining blade with the bottom heat wire (2).
3) Install wiper arm mounting nut (3).

Tightening Torque
(a): 8 N·m (0.8 kg-m, 5.9 lb-ft)

REAR WINDOW DEFOGGER

DEFOGGER SWITCH (IN BLOWER FAN AND DEFOGGER SWITCH)

REMOVAL

Remove blower fan and defogger switch. Refer to BLOWER FAN & DEFOGGER SWITCH REMOVAL in Section 1A.

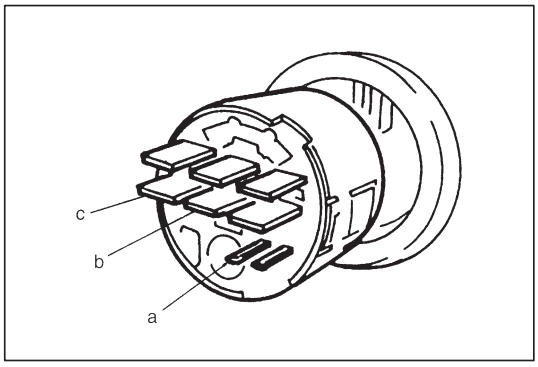

INSPECTION

Check defogger switch for continuity.
If switch has no continuity between terminals, replace.

Terminal / Position	a	b	c
PUSH	○	⓪ ○	
PULL	○	⓪ ○	○

INSTALLATION

Reverse removal procedure for installation.

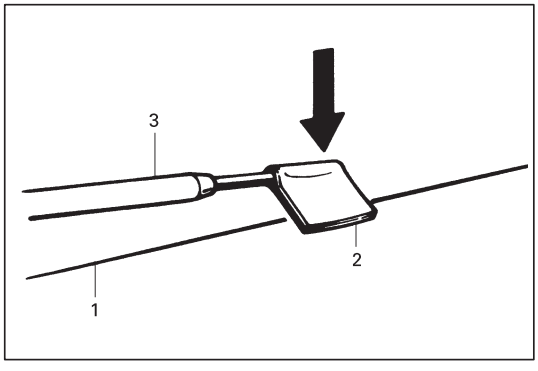

DEFOGGER WIRE

CAUTION:
When cleaning rear window glass, use a dry cloth to wipe it along wire direction.
And also do not use detergent or abrassive-containing glass cleaner. Otherwise, wire may be damaged.

NOTE:
When measuring wire voltage, use a tester with negative probe (3) wrapped with a tin foil (2) which should be held down on wire (1) by finger pressure.

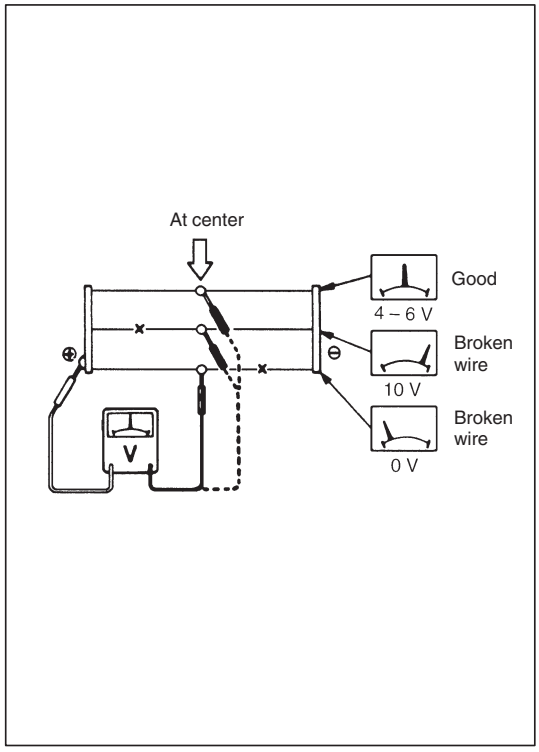

INSPECTION

1) Checking wire damage
   a. Turn main switch ON.
   b. Turn defogger switch ON.
   c. Check voltage at the center of each heat wire, as shown.

Voltage	Criteria
Approx. 5 V	Good (No break in wire)
Approx. 10 V or 0V	Broken wire

If measured voltage is 10 V, wire must be damaged between its center and positive end. If voltage is zero, wire must be damaged between its center and ground.

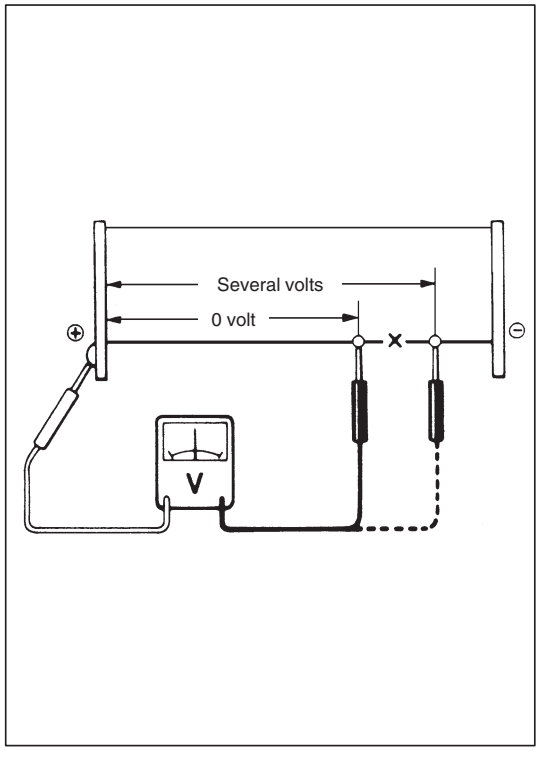

2) Locating damage in wire
   a. Touch voltmeter positive (+) lead to heat wire positive terminal end.
   b. Touch voltmeter negative (–) lead with a foil strip to heat wire positive terminal end, then move it along wire to the negative terminal end.
   c. The place where voltmeter fluctuates from zero to several volts is where there is damage.

   NOTE:
   If heat wire is free from damage, voltmeter should indicate 12 V at heat wire positive terminal end and its indication should decrease gradually toward zero at the other terminal (ground).

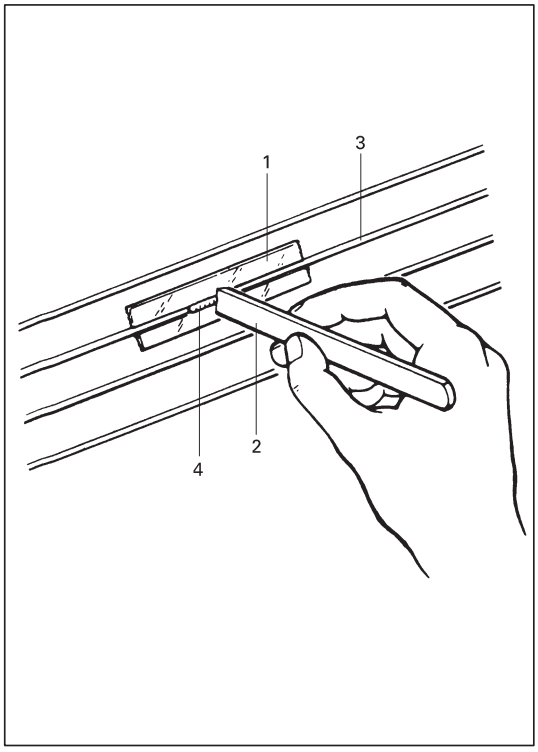

DEFOGGER CIRCUIT REPAIR

1) Use white gasoline for cleaning.
2) Apply masking tape (1) at both upper and lower sides of heat wire (3) to be repaired.
3) Apply commercially-available repair agent (4) with a fine-tip brush (2).
4) Two to three minutes later, remove masking tapes (1) previously applied.
5) Leave repaired heat wire (3) as it is for at least 24 hours before operating defogger again.

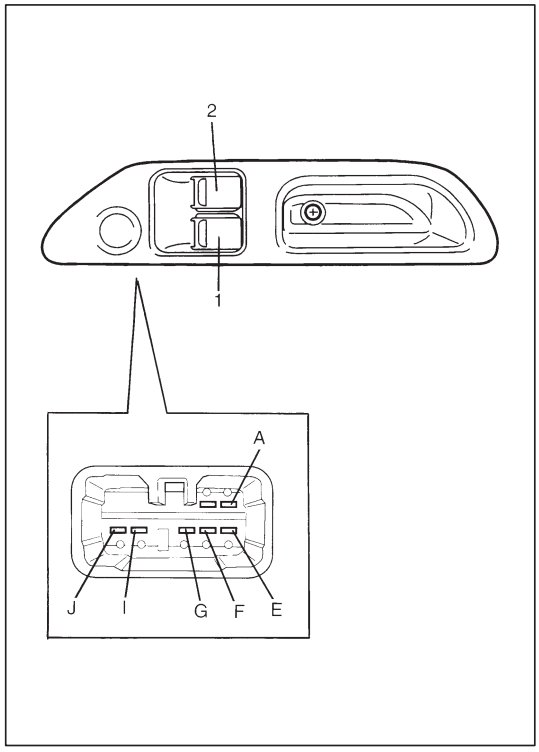

POWER WINDOW CONTROL SYSTEM (IF EQUIPPED)

POWER WINDOW MAIN SWITCH

INSPECTION

Inspect switch for continuity between terminals.

LH steering vehicle

	Driver Side Window Switch (1)				Passenger Side Window Switch (2)			
Terminal / Switch	G	E	F	A	G	J	I	A
UP	○—○		○—○		○—○		○—○	
OFF		○—○	○—○			○—○	○—○	
DOWN	○—○	○—○			○—○	○—○		

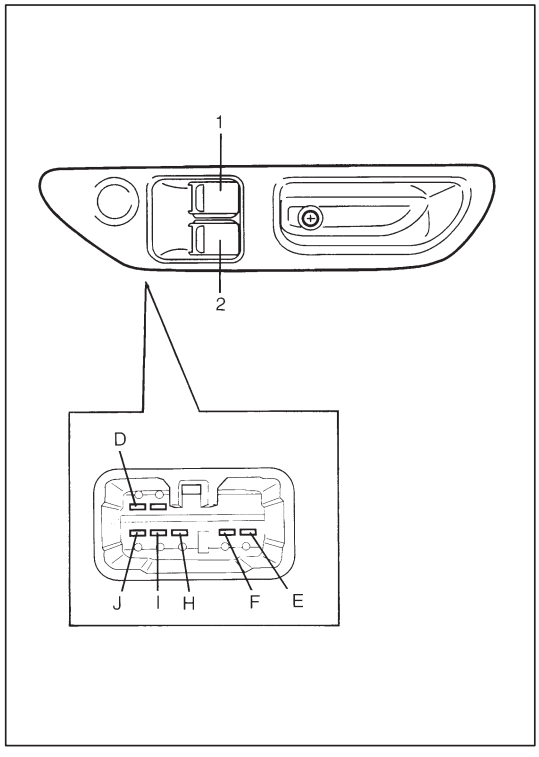

RH steering vehicle

	Driver Side Window Switch (1)				Passenger Side Window Switch (2)			
Terminal / Switch	H	J	I	D	H	E	F	D
UP	○—○		○—○		○—○		○—○	
OFF		○—○	○—○			○—○	○—○	
DOWN	○—○	○—○			○—○	○—○		

LH steering vehicle

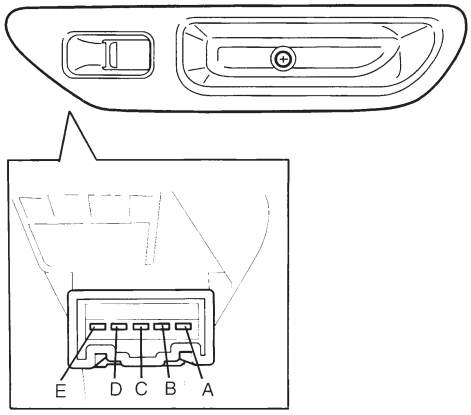

RH steering vehicle

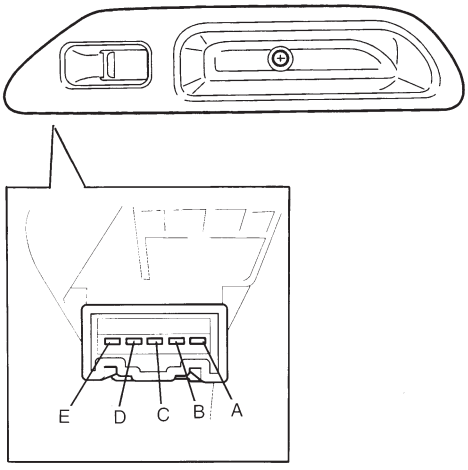

POWER WINDOW SUB SWITCH

INSPECTION

Inspect switch for continuity between terminals.

Terminal / Switch Position	C	A	D	B	E
UP	○			○	
			○		○
OFF		○		○	
			○		○
DOWN		○		○	
	○				○

LH steering vehicle

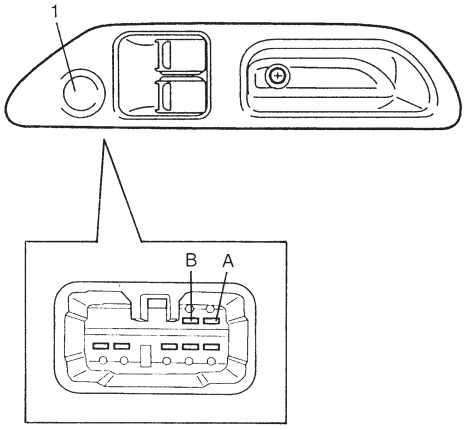

RH steering vehicle

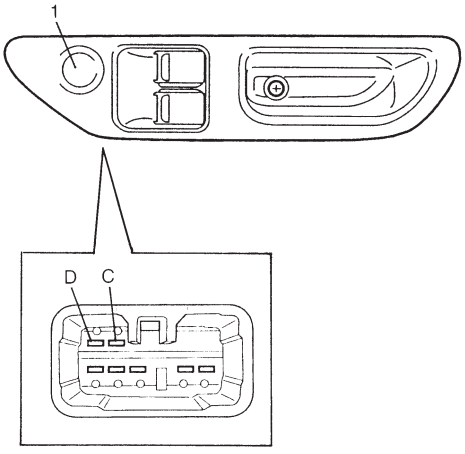

POWER DOOR LOCK SYSTEM (IF EQUIPPED)

POWER DOOR LOCK SWITCH

INSPECTION

Inspect continuity between terminals according to door lock switch (1) action.

For LH steering Vehicle terminal		A	B
For RH steering Vehicle terminal		D	C
Switch	PUSH	○	○
	FREE		

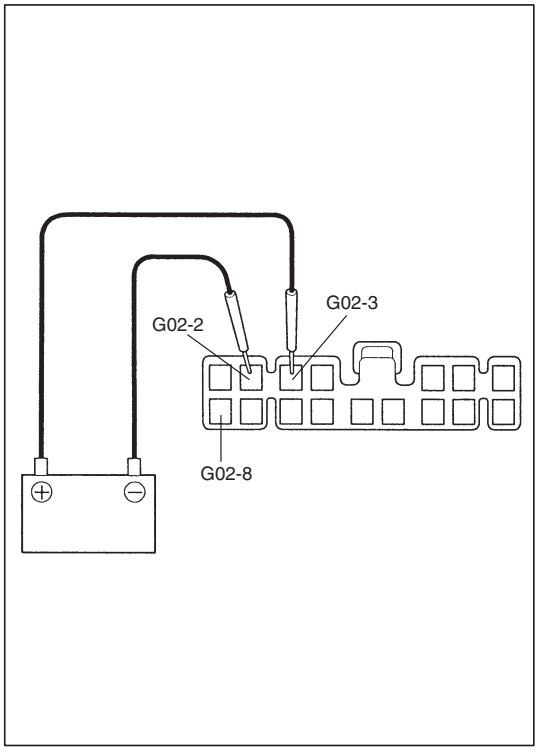

POWER DOOR LOCK CIRCUIT

INSPECTION

1) Disconnect negative cable at battery.
2) Disconnect door lock controller coupler.
3) Use a 12 V battery to connect its (+) terminal to terminal G02-3, and its (–) terminal to terminal G02-2. Check all power door locks are in lock position.
   Connect battery (+) terminal to G02-8, and its (–) terminal to G02-2. Check all power door locks (except back door lock) are in dead lock position.
   Connect battery (+) terminal to G02-2, and its (–) terminal to G02-3 and G02-8. Check all power door locks are in unlock position. If check result is not satisfactory, repair wiring harness and recheck.

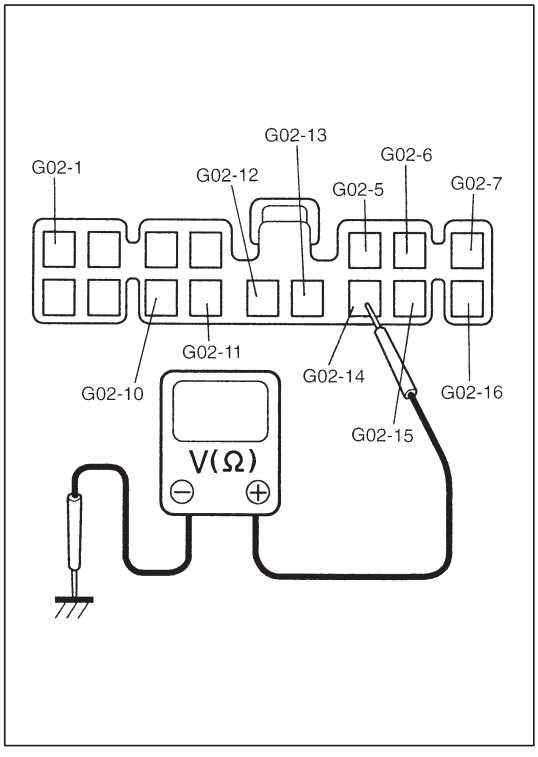

4) Connect battery negative cable at battery.
5) Check that the voltage and resistance between following terminals are specifications.

Terminals	Condition	Specification
G02-16 and ground	———	10 – 15 V
G02-11 and ground	When ignition switch is in OFF position	0 V
	When ignition switch is in ON position	10 – 15 V
G02-10 and ground	When ignition switch is in OFF position	0 V
	When ignition switch is in ACC position	10 – 15 V
G02-1 and ground	———	Continuity
G02-7 and ground	———	Continuity
G02-5 and ground	When door lock switch is pushed	Continuity
	When door lock switch is free	No continuity
G02-14 and ground	When all door switch is in OFF position	No continuity
G02-12 and ground	When driver side key switch is in unlock position	Continuity
	When driver side key switch is in OFF position	No continuity
G02-13 and ground	When driver side key switch is in lock position	Continuity
	When driver side key switch is in OFF position	No continuity
G02-15 and ground	When passenger side key switch is in unlock position	Continuity
	When passenger side key switch is in OFF position	No continuity
G02-6 and ground	When passenger side key switch is in lock position	Continuity
	When passenger side key switch is in OFF position	No continuity

If check result is not satisfactory, repair.

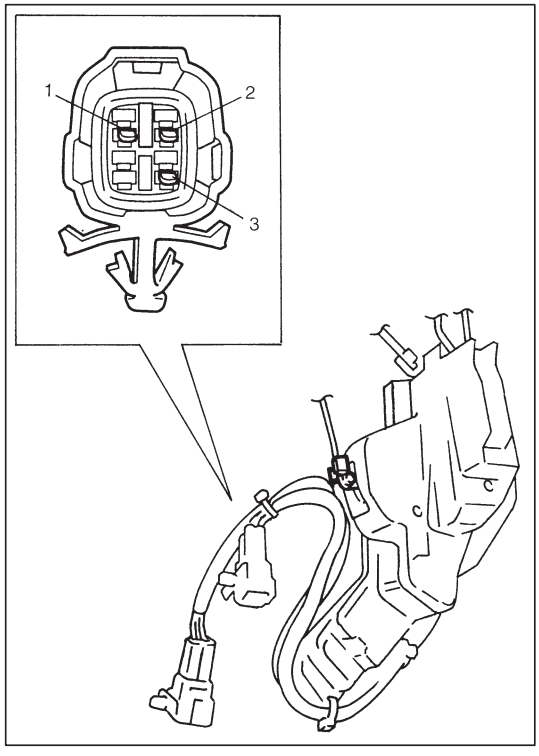

KEY CYLINDER SWITCH

INSPECTION

Inspect continuity between terminals under the following key position.

LH steering vehicle

For driver side terminal		3	2	1
For passenger side terminal		1	2	3
Key	LOCK	○	○	
	OFF			
	UNLOCK		○	○

RH steering vehicle

For driver side terminal		1	2	3
For passenger side terminal		3	2	1
Key	LOCK	○	○	
	OFF			
	UNLOCK		○	○

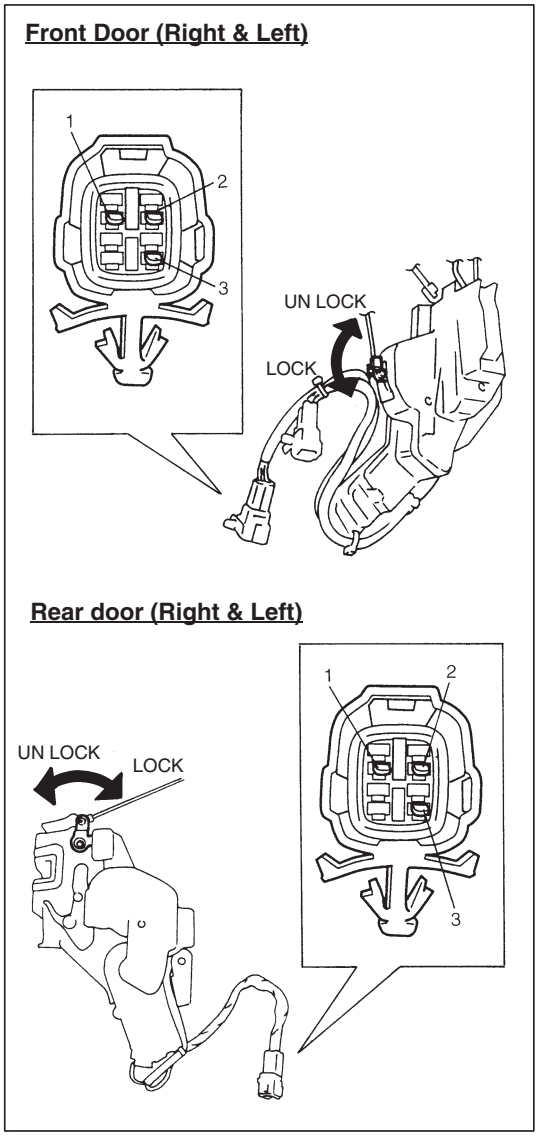

POWER DOOR LOCK ACTUATOR

INSPECTION

1) Disconnect power door lock actuator coupler.
2) Connect 12 V battery positive and negative terminals to the door lock actuator terminals shown below.
   If it does not operate as specified in table below, replace door lock actuator.

Front & Rear door

Operation / Terminal	UNLOCK → LOCK	LOCK → DEAD LOCK	LOCK / DEAD LOCK → UNLOCK
1		⊕	⊖
2	⊖	⊖	⊕
3	⊕		⊖

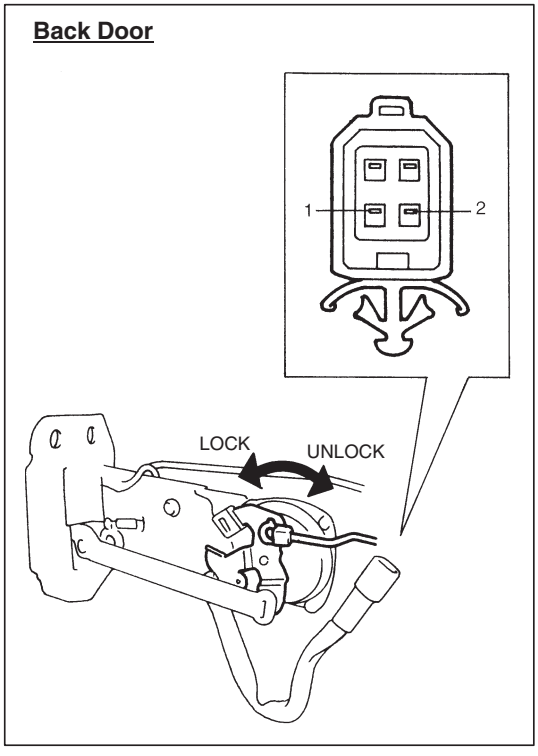

Back door

Operation / Terminal	LOCK	UNLOCK
1	⊕	⊖
2	⊖	⊕

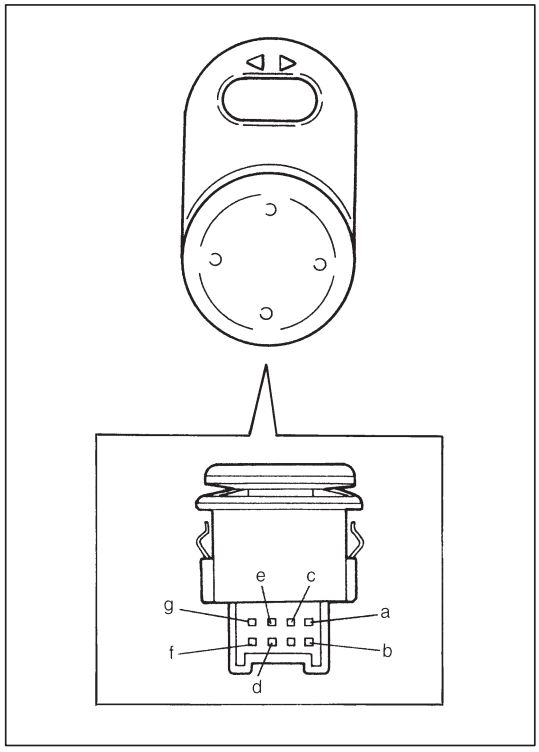

POWER DOOR MIRROR CONTROL SYSTEM (IF EQUIPPED)

MIRROR SWITCH

INSPECTION

1) Disconnect negative cable at battery.
2) Pull out mirror switch from door trim.
3) Disconnect mirror switch lead wire coupler.
4) Check continuity between terminals at each switch position.
   If any continuity is not obtained, replace mirror switch.

L / R	a	b	c	d / e	g / f
UP	○——	——○	○——	——○	
DOWN	○——	——○	——○	——○	
LEFT	○——	——○	○——	——	——○
RIGHT	○——	——○	——○	——	——○

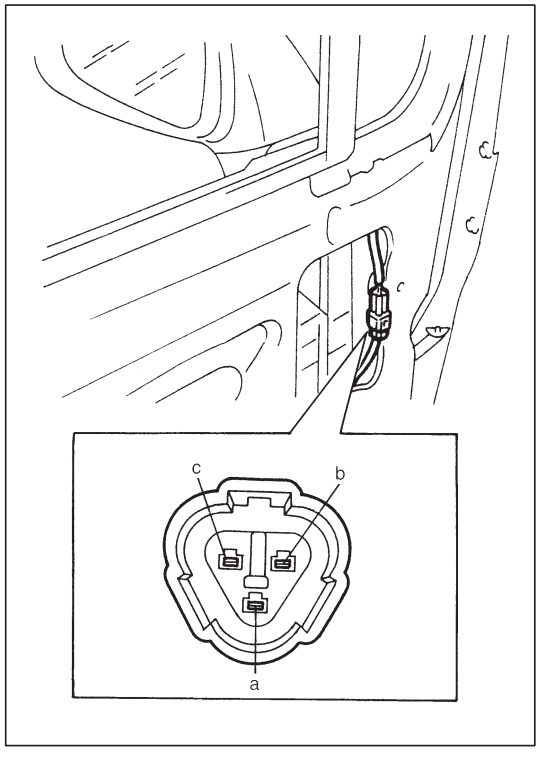

DOOR MIRROR ACTUATOR

INSPECTION

1) Disconnect negative cable at battery.
2) Remove door trim. Refer to steps 1) to 5) of FRONT DOOR GLASS REMOVAL in Section 9.
3) Disconnect door mirror coupler.
4) Check that door mirror operates properly when battery voltage is applied to connector terminals.
   Connect battery positive and negative terminal to the door mirror terminal shown below.
   If it does not operate as specified in table below, replace door mirror assembly.

Terminal / Operation	a	b	c
Up	⊖	⊕	
Down	⊕	⊖	
Left	⊖		⊕
Right	⊕		⊖

5) Install door trim. Reverse removal procedure.

REMOVAL AND INSTALLATION

Refer to DOOR MIRROR REMOVAL AND INSTALLATION in Section 9.

NOTE:

When installing door mirror to door, be careful not to pinch harness between door and door mirror.

SPECIAL TOOL

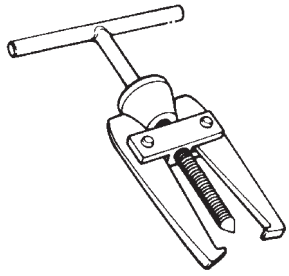

09913-60910
Bearing puller

SECTION 8G

IMMOBILIZER CONTROL SYSTEM

WARNING:
For vehicles equipped with Supplemental Restraint (Air Bag) System:

- **Service on and around the air bag system components or wiring must be performed only by an authorized SUZUKI dealer. Refer to AIR BAG SYSTEM COMPONENTS AND WIRING LOCATION VIEW under GENERAL DESCRIPTION in air bag section in order to confirm whether you are performing service on or near the air bag system components or wiring. Please observe all WARNING and SERVICE PRECAUTIONS under ON-VEHICLE SERVICE in air bag system section before performing service on or around the air bag system components or wiring. Failure to follow WARNINGS could result in unintentional activation of the system or could render the system inoperative.**
  Either of these two conditions may result in severe injury.
- **Technical service word must be started at least 90 seconds after the ignition switch is turned to the "LOCK" position and the negative cable is disconnected from the battery.**
  Otherwise, the system may be activated by reserve energy in the Sensing and Diagnostic Module (SDM).

CONTENTS

GENERAL DESCRIPTION

COMPONENTS

The immobilizer control system designed to prevent vehicle burglar and it consists of following components.

- Engine control module (ECM)
- Immobilizer control module (including coil antenna)
- Ignition key with built-in transponder

Operation of this system is as follows.

1. Each ignition key has its FIX CODE (FC) stored in memory. When the ignition switch is turned to ON (II) position, immobilizer control module tries to read the FC through the coil antenna built in immobilizer control module at ignition key switch.
2. Immobilizer control module compares FC read in step 1 and that registered in immobilizer control module and checks if they match.
3. ECM sends variable (generated randomly) to transponder via immobilizer control module and calculates it with SECRET KEY (SKC) stored in memory according to specified algorithm.
   On the other hand, transponder also calculates received variable with SKC stored in memory by means of same algorithm and sends back to ECM.
4. Only when it is confirmed that ECM/transponder calculated values match, ECM keeps running engine.
   If 2 calculated values did not match, ECM stops operation of injectors and ignitor to stop engine in about 1.8 seconds at the first time, after the second time ECM do not let engine start. And so it does when FIX CODEs in step 2 do not match.

WIRING CIRCUIT

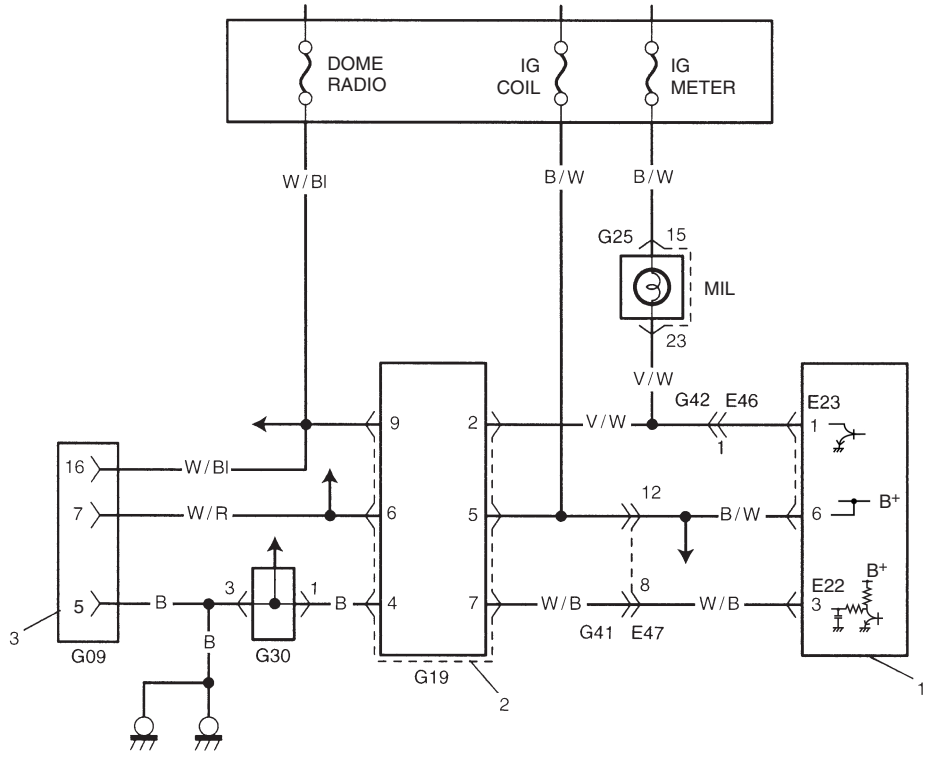

1. ECM
2. Immobilizer control module
3. DLC connector

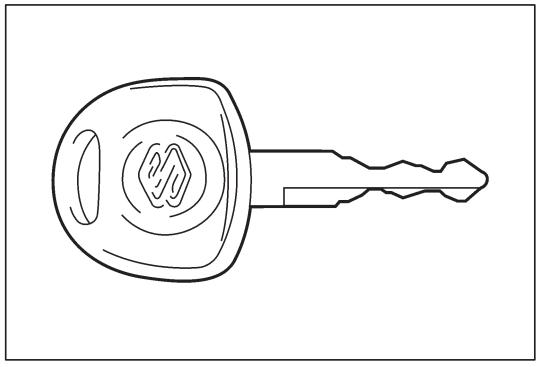

IGNITION KEY (WITH BUILT-IN TRANSPONDER)

Transponder is built in an ignition key housing. Each transponder in the key has a FIX CODE (FC) for transmission and SECRET KEY (SKC) for calculation. The FC will transmitted from the transponder via the coil antenna to immobilizer control module when the ignition switch is turned to ON (II) position.
SKC is used for calculation with variable send from ECM.
SKC is preset (programmed) at factory shipment.

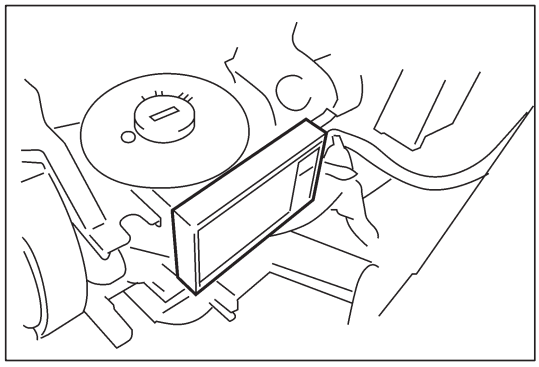

IMMOBILIZER CONTROL MODULE

Immobilizer control module is installed to steering column beside ignition key switch. The coil antenna is installed to immobilizer control module. It energizes transponder and transmits the FIX CODE and data between transponder and immobilizer control module.
As main functions, immobilizer control module checks matching between FIX CODE transmitted from transponder and that registered in immobilizer control module (up to 5 different FIX CODE can be registered).
Immobilizer control module controls serial communication between scan tool and ECM.
Immobilizer control module has 3 different values as the follows.

- Password (PWD); for accessing to program by means of scan tool.
- SECRET KEY (SKC); for ECM and transponder to calculate with.
- FIX CODE (FC); for checking if transponder is the registered one.

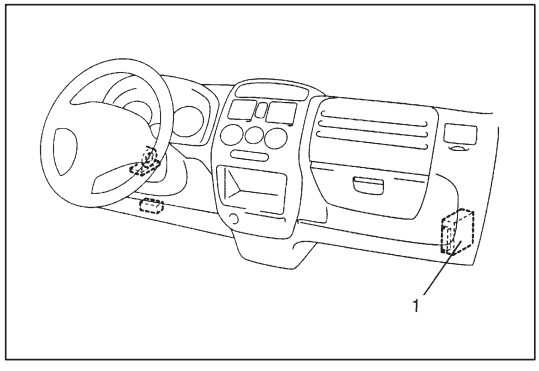

ECM

As main functions other than engine control, ECM (1) sends randomized data to transponder and checks matching between a response from transponder and the value calculated in ECM.
According to matching result of the FIX CODE and calculated value, ECM decides to keep engine running or not.
ECM has 2 different values as follows.

- Password (PWD); for accessing to program immobilizer system.
- SECRET KEY (SKC); Calculate with this value for permission of engine start.

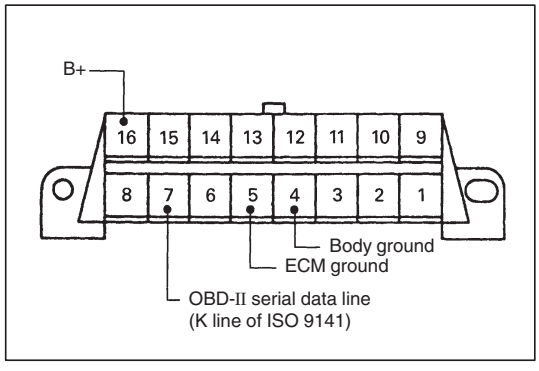

DATA LINK CONNECTOR (DLC)

DLC is in compliance with SAE J1962 in its installation position, the shape of connector and pin assignment.
OBD-II serial data line (K line of ISO 9141) is used for SUZUKI scan tool to communicate with immobilizer control module, Airbag SDM, ABS control module, etc.

ON-BOARD DIAGNOSTIC SYSTEM

ECM and immobilizer control module diagnose troubles which may occur in the area including the following parts when the ignition switch is turned to ON position.

Immobilizer control module

- Immobilizer control module
- W-line (ECM/immobilizer control module communication line)
- Password
- MIL circuit
- Transponder (ignition key)
- Fix code

ECM

- ECM
- Secret key
- Password

When a trouble exists in the immobilizer control system (when immobilizer control module or ECM detects a diagnostic trouble code (DTC)), ECM stops operation of the injector and igniter.

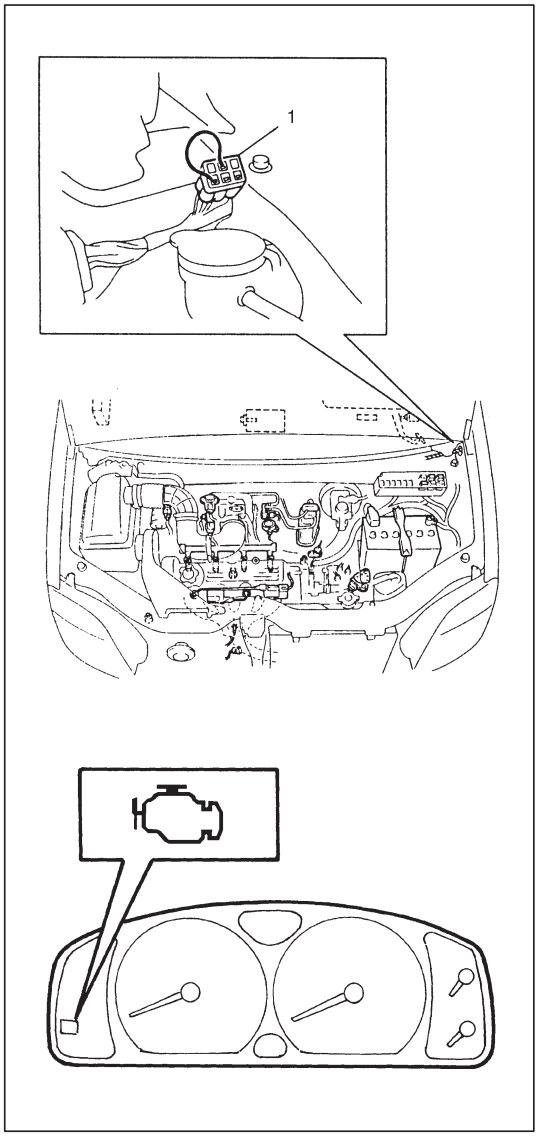

For EC spec vehicle (not equipped with diagnosis connector #3)

It is impossible to know whether immobilizer system have troubles or not by referring MIL.

It is possible to communicate by using only SUZUKI scan tool.

For non-EC spec vehicle (equipped with diagnosis connector #3)

With the diagnosis switch terminal of diagnosis connector #3 (diagnosis monitor connector) (1) for ECM not grounded, the ignition switch turned at ON position (but engine at stop) and regardless of the condition of the electronic fuel injection system, ECM indicates whether a trouble has occurred in the immobilizer control system or not by causing the malfunction indicator lamp to flash or turn on.

MIL lights on:
No trouble exists in immobilizer control system.

MIL flashes:
ECM detected some trouble in the immobilizer control system.

With ignition switch turned to ON position and diagnostic switch terminal grounded, ECM outputs DTC (diagnostic trouble code) by flashing MIL (malfunction indicator lamp).

NOTE:
As soon as the ignition switch is turned to ON position, ECM and immobilizer control module diagnose if a trouble has occurred in the immobilizer control system in about 5 seconds at maximum.
While the diagnosis is being made, the MIL (malfunction indicator lamp) stays on and diagnosis result is abnormal, it immediately changes to flashing but if the result is normal, it remains on.

DIAGNOSIS

ECM and immobilizer control module have on-board diagnostic system. Investigate where the trouble is by referring to DIAGNOSTIC FLOW TABLE and DIAGNOSTIC TROUBLE CODE TABLE.

PRECAUTIONS IN DIAGNOSING TROUBLES

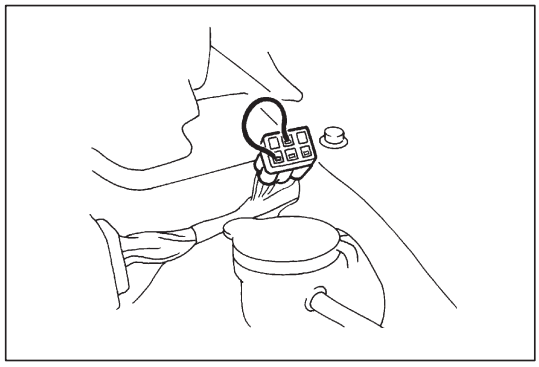

- Before confirming diagnostic trouble code, do not disconnect connector from ECM, battery cable from battery, ground wire harness or main fuse.
  Such disconnection will erase memorized information in ECM.
- For non-EC spec vehicle (equipped with diagnosis connector #3)
  If abnormality or malfunction lies in two or more areas, MIL (malfunction indicator lamp) indicates applicable codes three times each.
  And flashing of these codes is repeated as long as diagnosis terminal is grounded and ignition switch is held at ON position.
  When ECM detects a trouble in both electronic fuel injection system and immobilizer control system, MIL indicates trouble codes of both systems alternately while ignition switch is turned to ON position and diagnosis terminal is grounded.
- Diagnostic trouble code stored in immobilizer control module memory can be cleared as well as checked by using SUZUKI scan tool. Before using scan tool, read its Operator's (Instruction) Manual. Carefully to have good understanding as to what functions are available and how to use it.
- Be sure to read PRECAUTIONS FOR ELECTRICAL CIRCUIT SERVICE in section 0A before inspection and observe what is written there.
- There are cases where MIL indicates a DTC that occurred only temporarily and has gone. In such case, it may occur that good parts are replaced unnecessarily. To prevent such case, be sure to follow instructions given below when checking by using DIAGNOSTIC FLOW TABLE.
  - When trouble can be identified, it is not an intermittent one: check ignition key, wires and each connector and if they are all in good condition, substitute a known-good ECM and recheck.
  - When trouble can not be identified but MIL indicates a trouble code: diagnosis troubles by using that codes No. and if ignition key, wires and each connection are all in good condition, turn OFF ignition switch and then ON.
    Then check what MIL indicates.
    Only when they indicate trouble code again, substitute a known-good ECM or immobilizer control module and check again.
    If they indicate not DTC but normal code, it means that an intermittent trouble did occur and has gone. In this case, check wires and connection carefully.

PRECAUTIONS AFTER REPLACING ECM OR IMMOBILIZER CONTROL MODULE

- When ECM is replaced, including when replaced because rechecking by using a known-good ECM is necessary during trouble diagnosis, secret key and password must be registered in ECM by performing procedure described in PROCEDURE AFTER ECM REPLACEMENT.
- When immobilizer control module is replaced, including when replaced because rechecking by using a known-good immobilizer control module is necessary during trouble diagnosis, transponder fix code, secret key and/or password must be registered in immobilizer control module by performing procedure described in PROCEDURE AFTER IMMOBILIZER CONTROL MODULE REPLACEMENT.

DIAGNOSTIC FLOW TABLE

DIAGNOSTIC PROCEDURE FOR EC spec vehicle (not equipped with diagnosis connector #3)

STEP	ACTION	YES	NO
1	Turn ignition switch to start engine. Does engine run?	Go to step 5.	Go to step 2.
2	W-line circuit check Measure terminal voltage of immobilizer control module connector G19-7. Is it 10 – 14 V with ignition switch at ON position, 0 – 1 V with ignition switch at OFF position?	W-line circuit is in good condition. Go to step3.	W-line circuit open or short. Check and repair. Then go to step 3.
3	Check for DTC referring to DTC CHECK in SECTION 6. Is there any malfunction DTC(s)?	Go to step 4.	Go to step 5.
4	Check, repair and/or perform necessary registration procedure according to flow table corresponding to that code number. Is there other malfunction DTC(s)?	Repeat step 4 until no diagnostic code is indicated.	Go to step 5.
5	Check for DTC referring to DTC CHECK. Refer to DTC CHECK in this section. Is there any malfunction DTC(s)?	Go to step 6.	Immobilizer control system is in good condition. If engine does not run, electronic fuel injection system is failed. Proceed ENGINE DIAGNOSTIC FLOW TABLE in SECTION 6.
6	Check and repair according to flow table corresponding to that code number. Is there other malfunction DTC(s)?	Repeat step 6 until no diagnostic code is indicated.	Immobilizer control system is in good condition. If engine does not run, electronic fuel injection system is failed. Proceed ENGINE DIAGNOSTIC FLOW TABLE in SECTION 6.

DIAGNOSTIC PROCEDURE FOR NON-EC spec vehicle (equipped with diagnosis connector #3)

STEP	ACTION	YES	NO
1	Check MIL (malfunction indicator lamp) for flashing with ignition switch turned to ON position and diagnosis terminal of monitor connector (diagnosis connector #3) not grounded. Is it flashing?	Go to step 2.	Go to step 5.
2	W-line circuit check Measure terminal voltage of immobilizer control module connector G19-7. Is it 10 – 14 V with ignition switch at ON position, 0 – 1 V with ignition switch at OFF position?	W-line circuit is in good condition. Go to step3.	W-line circuit open or short. Check and repair. Then go to step 3.
3	Check for DTC referring to DTC CHECK in SECTION 6. Is there any malfunction DTC(s)?	Go to step 4.	Go to step 5.
4	Check, repair and/or perform necessary registration procedure according to flow table corresponding to that code number. Is there other malfunction DTC(s)?	Repeat step 4 until no diagnostic code is indicated.	Go to step 5.
5	Check for DTC referring to DTC CHECK. Refer to DTC CHECK in this section. Is there any malfunction DTC(s)?	Go to step 6.	Immobilizer control system is in good condition. If engine does not run, electronic fuel injection system is failed. Proceed ENGINE DIAGNOSTIC FLOW TABLE in SECTION 6.
6	Check and repair according to flow table corresponding to that code number. Is there other malfunction DTC(s)?	Repeat step 6 until no diagnostic code is indicated.	Immobilizer control system is in good condition. If engine does not run, electronic fuel injection system is failed. Proceed ENGINE DIAGNOSTIC FLOW TABLE in SECTION 6.

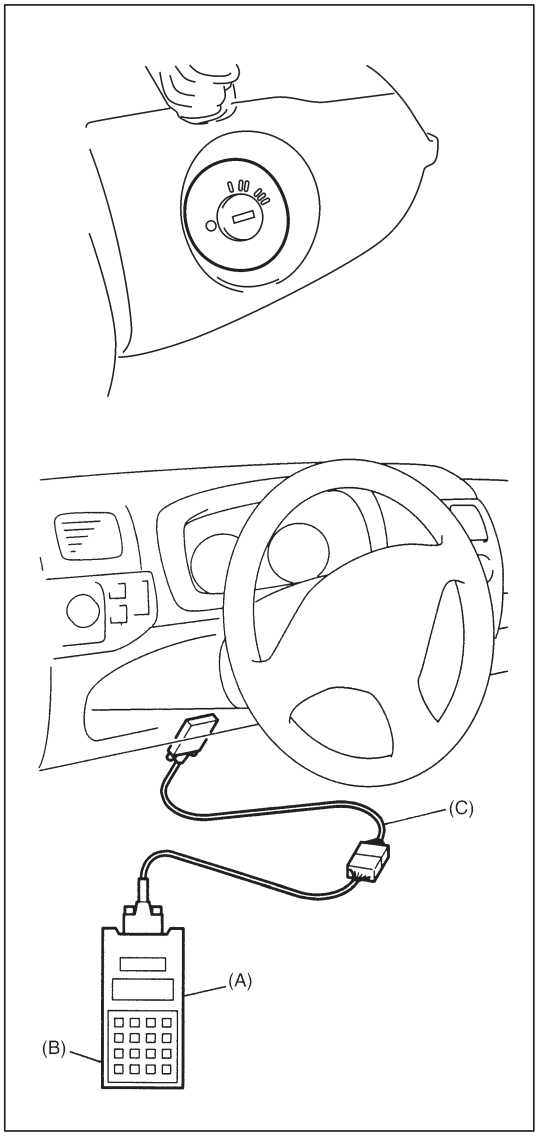

DIAGNOSTIC TROUBLE CODE (DTC) CHECK

IMMOBILIZER CONTROL MODULE

1) Prepare SUZUKI scan tool.
2) With ignition switch OFF to position ( ), connect it to data link connector (DLC) located under instrument panel at driver's seat side.

   Special Tool:
   (A): SUZUKI scan tool
   (B): Mass storage cartridge
   (C): 16/14 pin OBD-II adapter cable
   (D): 14/26 pin DLC cable (Use this cable if 14/26 pin DLC cable is not available)

3) Turn ignition switch to ON position (II).
   Read DTC according to instructions displayed on scan tool and print it or write it down.
   Refer to scan tool operator's manual for further details.
   If communication between scan tool and immobilizer control module is not possible, check if scan tool is communicable by connecting it to immobilizer control system in another vehicle. If communication is possible in this case, scan tool is in good condition. Then check data link connector and serial data line (circuit) in the vehicle with which communication was not possible.

   NOTE:
   DTC No. B3040, B3042 and B3043 can not be confirmed by scan tool unless W-line circuit is repaired.

4) After completing the check, turn ignition switch to OFF position and disconnect scan tool from data link connector.

ECM

Refer to DTC CHECK in SECTION 6.

DIAGNOSTIC TROUBLE CODE (DTC) CLEARANCE

IMMOBILIZER CONTROL MODULE

1) Connect SUZUKI scan tool to data link connector in the same manner as when making this connection for DTC check.
2) Turn ignition switch to ON position.
3) Erase DTC according to instructions displayed on scan tool. Refer to scan tool operator's manual for further details.
4) After completing the clearance, turn ignition switch to OFF position and disconnect scan tool from data link connector.

ECM

Refer to DTC CLEARANCE in SECTION 6.

DIAGNOSTIC TROUBLE CODE (DTC) TABLE

IMMOBILIZER CONTROL MODULE

DTC NO.	DETECTED ITEM	DETECTING CONDITION
B1000	Immobilizer control module internal failure	Immobilizer control module failure
B3040	W-line communication failure	Communication not finished correctly
B3042	W-line circuit shorted to ground	W-line circuit voltage low
B3043	W-line circuit shorted to battery	W-line circuit voltage high
B3055	No transponder	Ignition key without transponder is used
B3056	No transponder FIX CODE registered	Transponder fix code is not registered in immobilizer control module
B3057	No password registered	Password is not registered in immobilizer control module
B3059	No request from ECM	ECM/Immobilizer control module line (MIL) is open or shorted
B3060	Incorrect transponder detected	Unregistered transponder (FIX CODE) is detected
B3061	Transponder communication fail	Incorrect signal or no response from transponder
B3077	Read-only transponder detected	Transponder not for this system is detected

ECM

DTC NO.		DETECTED ITEM	DETECTING CONDITION
Display on scan tool	MIL flashing pattern		
P1610	89	Secret key and password not registered	Secret key and password are not registered in ECM
P1611	85	Password not matched	Stored password is incorrect
P1612	86	No signal from immobilizer	Invalid signal from immobilizer control module
P1613	87	No signal from immobilizer	Invalid signal from immobilizer control module
P1614	88	Incorrect signal from immobilizer	Received response from transponder is incorrect

NOTE:

- **Two-figure DTC NO. s (MIL flashing patterns) are indicated when diagnosis terminal of diagnosis connector #3 (monitor connector) is grounded for non-EC spec vehicle (equipped with diagnosis connector #3).**
- **If abnormality or malfunction lies in two or more areas, MIL (malfunction indicator lamp) indicates applicable codes three times each.**
  And flashing of these codes is repeated as long as diagnosis terminal is grounded and ignition switch is held at ON position.
- **DTC B3040, B3042 and B3043 not be confirmed by scan tool unless W-line circuit is repaired.**
- **DTC B3059 is detected when turn ignition switch to ON (II) position within 5 seconds after ignition switch turned to (I) or ( ) position from (II) position.**

SCAN TOOL DATA

As the data value given below are standard values estimated on the basis of values obtained from the normally operating vehicles by using a scan tool, use them as reference values. Even when the vehicle is in good condition, there may be cases where the checked value does not fall within each specified data range. Therefore, judgment as abnormal should not be made by checking with there data alone.
Also, conditions in the table below that can be checked by the scan tool are those detected by immobilizer control module and output from immobilizer control module as commands.

SCAN TOOL DATA	VEHICLE CONDITION	NORMAL CONDITION/ REFERENCE VALUES
IGNITION SW	Ignition switch turned to ON position	ON
TRANSPONDER	Ignition switch turned to ON position	DETECTED
TRANS SKC	Ignition switch turned to ON position	REGISTERED
FIX CODE	Ignition switch turned to ON position	REGISTERED
NUMBER OF FC	(Vehicle is in normal condition)	1-5 pcs
PASSWORD	(Vehicle is in normal condition)	PROGRAMMED
WAIT LOOP	(Vehicle is in normal condition)	INACTIVE
WAIT TIME	(Vehicle is in normal condition)	0 SEC

SCAN TOOL DATA DEFINITIONS

IGNITION SW

Ignition key switch position
ON: Ignition switch at ON position
OFF: Ignition switch at OFF position

TRANSPONDER

DETECTED: Transponder in ignition key is detected by immobilizer control module.
NOT DETECTED: Transponder in ignition key is not detected.

TRANS SKC

REGISTERED: Secret key is registered in ignition key with built-in transponder.
NOT REGISTERED: Secret key is not registered in ignition key with built-in transponder yet.

FIX CODE

REGISTERED: The FIX CODE of ignition key which is inserted in key cylinder is registered in immobilizer control module.
NOT REGISTERED: The FIX CODE of ignition key which is inserted in key cylinder is not registered in immobilizer control module.

NUMBER OF FC (PCS)

The number of registered ignition key (FIX CODE).

PASSWORD

REGISTERED: Password is registered in immobilizer control module.
NOT REGISTERED: Password is not registered. It is necessary to register password to set immobilizer control module in normal operation status.

WAIT-LOOP

INACTIVE: Security system is inactive. It is ready for password input on scan tool.
ACTIVE: Incorrect password was inputted and system is in wait-loop status. Inputting password is inhibited for the waiting time described below.

WAIT TIME (SEC, MIN)

The time it must be waited for reinput password for programming SUZUKI scan tool indicates “0 SEC.” when a correct password is input after wait time.
If failed to input correct password, it increase according to the times of misinput.

INSPECTION OF IMMOBILIZER CONTROL MODULE AND ITS CIRCUITS

VOLTAGE INSPECTION

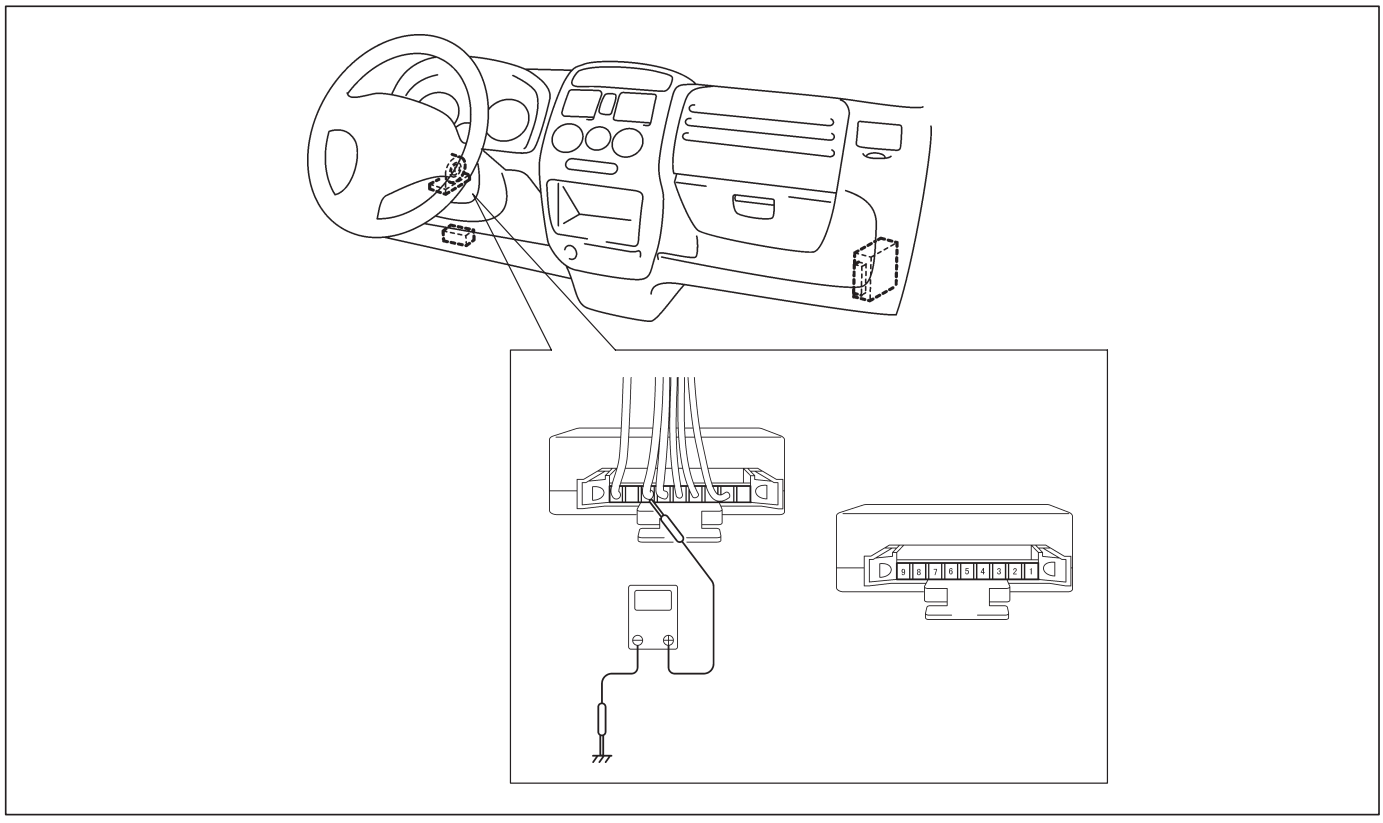

Immobilizer control module can be checked at wiring connectors by measuring voltage.

CAUTION:
Immobilizer control module can not be checked by itself. It is strictly prohibited to connect voltmeter or ohmmeter to immobilizer control module with coupler disconnected from it.

NOTE:
As the battery voltage affects each terminal voltage, confirm that it is 11 V or more when ignition switch is turned to ON position.

TERMINAL			CIRCUIT	NORMAL VOLTAGE	CONDITION
CONNECTOR G19	1	–	Not used	——	——
	2	V/W	MIL	0 – 1 V	MIL lights on
	3	–	Not used	——	——
	4	B	Ground	0 – 1 V	Anytime
	5	B/W	Ignition switch signal	10 – 14 V 0 – 1 V	Ignition switch at ON position Ignition switch at OFF position
	6	W/R	Data link connector (Serial data line)	10 – 14 V 0 – 1 V	Scan tool connected Scan tool disconnected
	7	W/B	W-line	10 – 14 V 0 – 1 V	Scan tool connected or ignition switch at ON position. Scan tool disconnected and ignition switch at OFF position.
	8	–	Not used	——	——
	9	W/Bl	Power supply	10 – 14 V	Anytime

DTC B1000 IMMOBI CONT MODULE INTERNAL FAIL

DTC DETECTING CONDITION AND TROUBLE AREA

DTC DETECTING CONDITION	TROUBLE AREA
Immobilizer control module internal fail.	Immobilizer control module

TROUBLE SHOOTING (DTC B1000)

STEP	ACTION	YES	NO
1	1) Ignition switch at OFF position. 2) Disconnect connector from immobilizer control module. 3) Check for proper connection to immobilizer control module at all terminals. Are they in good condition?	Substitute a known-good immobilizer control module according to PROCEDURE FOR IMMOBILIZER CONTROL MODULE REPLACEMENT and recheck.	Repair or replace.

DTC B3040 W-LINE COMMUNICATION FAIL

WIRING CIRCUIT

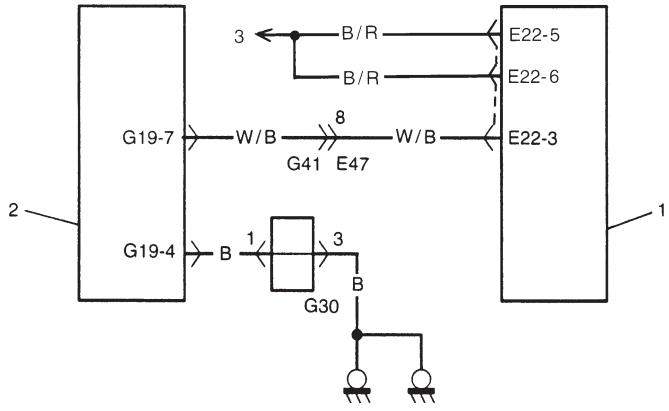

1. ECM
2. Immobilizer control module
3. Main relay

DTC DETECTING CONDITION AND TROUBLE AREA

DTC DETECTING CONDITION	TROUBLE AREA
No response from ECM while immobilizer control module requests signal.	W-line circuit ECM power circuit

TROUBLE SHOOTING (DTC B3040)

STEP	ACTION	YES	NO
1	1) Ignition switch at OFF position. 2) Disconnect connector from ECM. 3) Check for proper connection to ECM at E22-3 terminal. Is it in good condition?	Go to step 2.	Repair or replace.
2	1) Ignition switch at OFF position. 2) Disconnect connector from immobilizer control module. 3) Check for proper connection to immobilizer control module at G19-7 terminal. Is it in good condition?	Go to step 3.	Repair or replace.
3	With connectors connected, measure voltage between terminal G19-7 and ground with ignition switch at ON position. Is it 10 – 14 V?	Go to step 4.	W-line (W/B) circuit open.
4	With ignition switch at ON position, measure voltage between E22-5 or E22-6 and ground. Are they 10 – 14 V?	Substitute a known-good ECM according PROCEDRE FOR ECM REPLACEMENT and recheck.	ECM power supply (B/R) circuit open.

DTC B3042 W-LINE CKT MALF (SHORT TO GROUND)

WIRING CIRCUIT

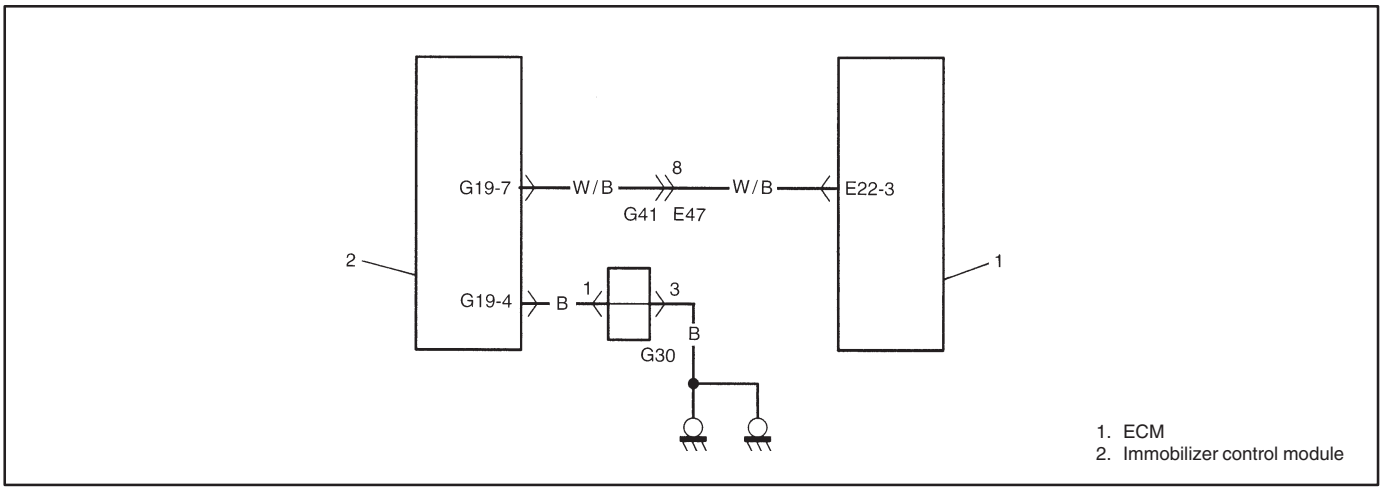

DTC DETECTING CONDITION AND TROUBLE AREA

DTC DETECTING CONDITION	TROUBLE AREA
W-line circuit voltage is low.	W-line circuit is shorted to ground

TROUBLE SHOOTING (DTC B3042)

STEP	ACTION	YES	NO
1	1) Ignition switch at OFF position. 2) Disconnect connector from ECM. 3) Check for proper connection to ECM at E22-3 terminal. Is it in good condition?	Go to step 2.	Repair or replace.
2	1) Connect connector to ECM. 2) Measure voltage between G19-7 terminal of immobilizer control module and body ground with ignition switch at ON position. Is it 10 – 14 V?	Substitute a known-good ECM according to PROCEDURE FOR ECM REPLACEMENT and recheck.	W-line is shorted to ground. Repair and recheck.

Fig. for step 2

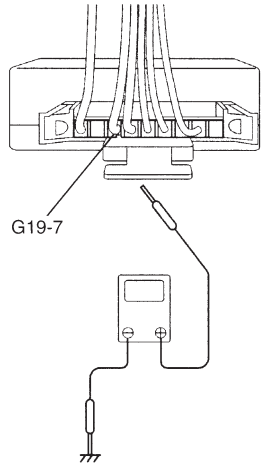

DTC B3043 W-LINE CKT MALF (SHORT TO BATTERY)

WIRING CIRCUIT

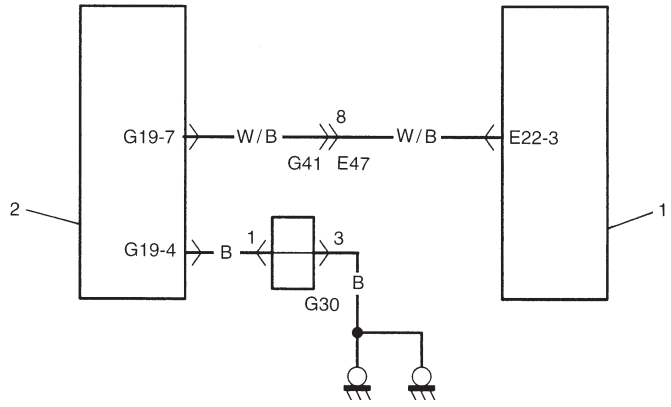

1. ECM
2. Immobilizer control module

DTC DETECTING CONDITION AND TROUBLE AREA

DTC DETECTING CONDITION	TROUBLE AREA
W-line circuit voltage is high.	W-line circuit is shorted to power supply circuit.

TROUBLE SHOOTING (DTC B3043)

STEP	ACTION	YES	NO
1	1) Ignition switch at OFF position. 2) Disconnect connector from ECM. 3) Check for proper connection to ECM at E22-3 terminal. Is it in good condition?	Go to step 2.	Repair or replace.
2	1) Connect connector to ECM. 2) Measure voltage between G19-7 terminal of immobilizer control module and body ground with ignition switch at OFF position and scan tool disconnected. Is it 0 – 1 V?	Substitute a known-good ECM according to PROCEDURE FOR ECM REPLACEMENT and recheck.	W-line is shorted to power supply circuit. Repair and recheck.

Fig. for step 2

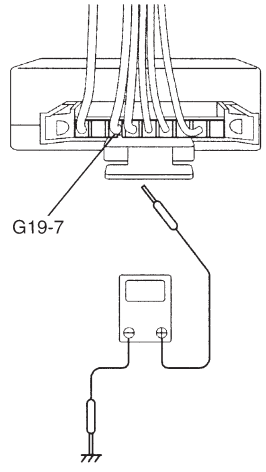

DTC B3055 NO TRANSPONDER

DTC DETECTING CONDITION AND TROUBLE AREA

DTC DETECTING CONDITION	TROUBLE AREA
No FIX CODE is transmitted from transponder or no code is transmitted.	Ignition key (not transponder) FIX CODE transmission error

TROUBLE SHOOTING (DTC B3055)

STEP	ACTION	YES	NO
1	1) Ignition switch at OFF position and leave it for 5 seconds or more. 2) Pull out ignition key and reinsert it. 3) Turn ignition switch to run engine. Does engine start?	Temporaty error in code reading. Immobilizer control system is in good condition.	Go to step 2.
2	1) Check ignition key for shape by referring to figure. Is it the original one?	Check ignition key referring to PRECAUTIONS IN HANDLING IMMOBILIZER CONTROL SYSTEM and repair or replace.	Ignition key with built-in transponder unusable. Replace, register it if necessary and recheck.

Fig. for step 2

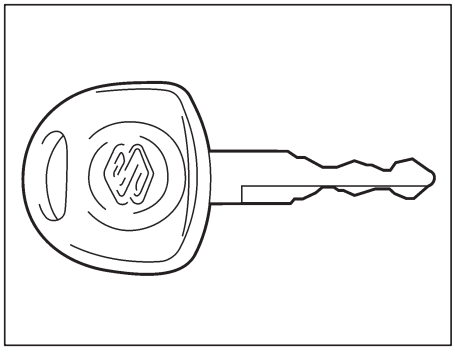

DTC B3056 NO FIX CODE REGISTERED

DTC DETECTING CONDITION AND TROUBLE AREA

DTC DETECTING CONDITION	TROUBLE AREA
No transponder FIX CODE (FC) is registered in immobilizer control module.	Immobilizer control module

TROUBLE SHOOTING (DTC B3056)

STEP	ACTION	YES	NO
1	Check DATA LIST “NUMBER OF FC”. Is it 0?	Go to step 2.	Substitute a known-good immobilizer control module according to PROCEDURE FOR IMMOBILIZER CONTROL MODULE REPLACEMENT and recheck.
2	Is DTC B3057 also output?	Proceed DTC FLOW TABLE of DTC B3057. Then go to step 3.	Go to step 3.
3	Register ignition key(s) with built-in transponder according to HOW TO REGISTER IGNITION KEY under ON-VEHICLE SERVICE. Check SUZUKI scan tool DATA LIST “NUMBER OF FC”. Is it 1 or more?	Transponder FIX CODE(s) is registered.	Transponder registration procedure is not completed correctly. Register ignition key again.

DTC B3057 NO PASSWORD REGISTERED

DTC DETECTING CONDITION AND TROUBLE AREA

DTC DETECTING CONDITION	TROUBLE AREA
Password is not registered in immobilizer control module.	Immobilizer control module

TROUBLE SHOOTING (DTC B3057)

STEP	ACTION	YES	NO
1	1) Register password by using SUZUKI scan tool. Refer to HOW TO REGISTER PASSWORD. 2) Confirm that password is registered correctly, referring to SUZUKI scan tool DATA LIST. Is PASSWORD REGISTERED message output?	Password registration is completed.	Register password again and recheck.

DTC B3059 NO REQUEST FROM ECM

WIRING CIRCUIT

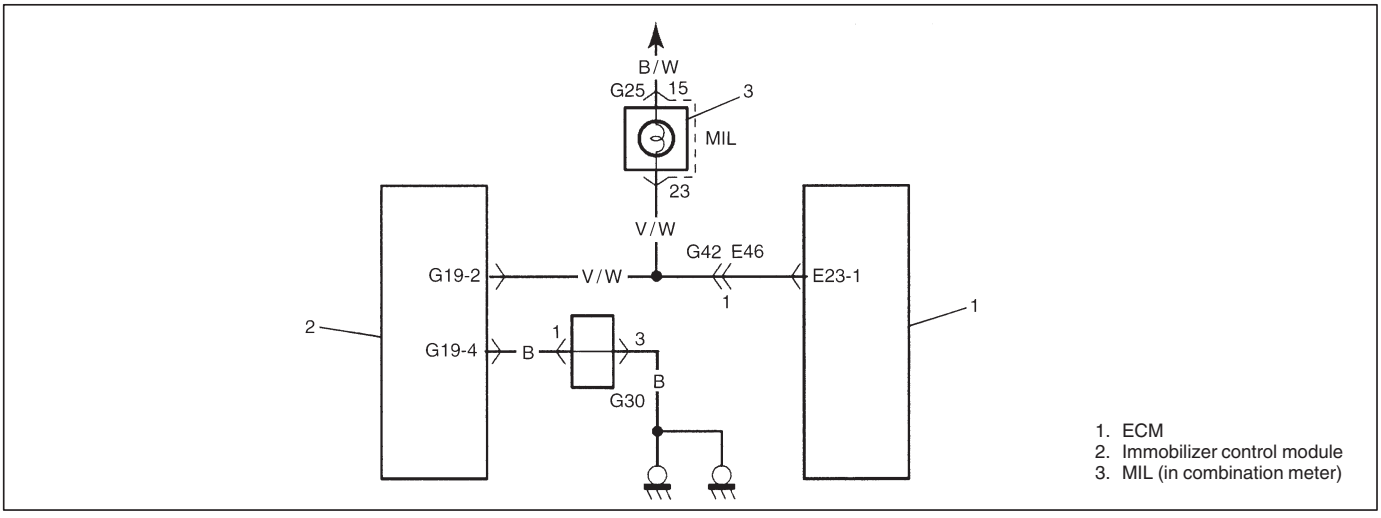

DTC DETECTING CONDITION AND TROUBLE AREA

DTC DETECTING CONDITION	TROUBLE AREA
No request from ECM via MIL circuit Ignition switch is not reset correctly.	MIL circuit faulty Communication between ECM and immobilizer control module

TROUBLE SHOOTING (DTC B3059)

STEP	ACTION	YES	NO
1	Turn ignition switch to (I) position or ( ) position for more than 5 seconds, then turn ignition switch to ON (II) position. Recheck DTC. Is DTC B3059 current?	Go to step 2.	Communication between ECM and immobilizer control module was not finished correctly.
2	1) Check for proper connection to ECM at E23-1 terminal. Is it in good condition?	Go to step 3.	Repair or replace.
3	1) Check for proper connection to immobilizer control module at G19-2 terminal. Is it in good condition?	Go to step 4.	Repair or replace.
4	1) Check V/W line for open or short. Is it in good condition?	Substitute a known-good ECM according to PROCEDURE FOR ECM REPLACEMENT and recheck.	Repair or replace.

DTC B3060 INCORRECT TRANSPONDER DETECTED

DTC DETECTING CONDITION AND TROUBLE AREA

DTC DETECTING CONDITION	TROUBLE AREA
FIX CODE does not match with registered one. FIX CODE is not registered in immobilizer control module.	Unregistered ignition key with built-in transponder Ignition key with built-in transponder faulty Immobilizer control module

TROUBLE SHOOTING (DTC B3060)

STEP	ACTION	YES	NO
1	Is DTC B3056 also output?	Proceed DTC FLOW TABLE of DTC B3056. Then go to step 2.	Go to step 2.
2	Check DATA LIST “TRANSPONDER FC”. Is it registered?	Replace ignition key with built-in transponder. Then go to step 3.	Go to step 3.
3	Register transponder according to HOW TO REGISTER IGNITION KEY under ON-VEHICLE SERVICE. Check SUZUKI scan tool DATA LIST for “FIX CODE”. Is it registered?	Transponder FIX CODE is registered.	Transponder registration procedure is not completed correctly. Register ignition key again.

DTC B3061 TRANSPONDER COMMUNICATION FAIL

DTC DETECTING CONDITION AND TROUBLE AREA

DTC DETECTING CONDITION	TROUBLE AREA
No response from transponder.	Ignition key with built-in transponder internally faulty
Secret key is not matched between ignition key (transponder)	Secret key is not registered in transponder Secret key is not registered in ECM Secret keys are different between ECM and transponder
FIX CODE does not match with registered one.	Unregistered ignition key with built-in transponder FIX CODE is detected
FIX CODE is not registered in immobilizer control module.	No FIX CODE in immobilizer control module

TROUBLE SHOOTING (DTC B3061)

STEP	ACTION	YES	NO
1	Is DTC B3060 also output?	Proceed DTC FLOW TABLE of DTC B3060. Then go to step 2.	Go to step 2.
2	Is DTC B3055 also output?	Proceed DTC FLOW TABLE of DTC B3055. Then go to step 3.	Go to step 3.
3	Check scan tool DATA LIST “TRANS SKC”. Is it REGISTERED?	Go to step 5.	Go to step 4.
4	1) Register SKC by performing REGI SKC/FC. 2) Check DTC. Is DTC B3061 still output?	Go to step 5.	Register SKC and recheck.
5	1) Register SKC and PWD to ECM by referring PROCEDURE AFTER ECM REPLACEMENT. 2) Check DTC. Is DTC B3061 still output?	Go to step 6.	If there is other DTC, proceed the DTC FLOW TABLE.
6	1) Replace ignition key with new one and register it by referring HOW TO REGISTER IGNITION KEY. 2) Check DTC. Is DTC B3061 still output?	Substitute a known-good immobilizer control module according to PROCEDURE FOR IMMOBILIZER CONTROL MODULE REPLACEMENT and recheck.	If there is other DTC, proceed to DTC FLOW TABLE.

DTC B3077 READ-ONLY TRANSPONDER DETECTED

DTC DETECTING CONDITION AND TROUBLE AREA

DTC DETECTING CONDITION	TROUBLE AREA
Transponder for other system is detected.	Ignition key with transponder

TROUBLE SHOOTING (DTC B3077)

STEP	ACTION	YES	NO
1	1) Ignition switch at OFF position and leave it for 5 seconds or more. 2) Pull out ignition key and reinsert it. 3) Turn ignition switch to run engine. Does engine start?	Temporary error in reading. Immobilizer control system is in good condition.	Replace ignition key with built-in transponder. Register transponder according to TRANSPONDER REGISTRATION.
2	Check ignition key for shape by referring to figure. Is it the original one?	Check ignition key referring to PRECAUTIONS IN HANDLING IMMOBILIZER CONTROL SYSTEM and repair or replace.	Ignition key with built-in transponder unusable. Replace, register it if necessary and recheck.

Fig. for step 2

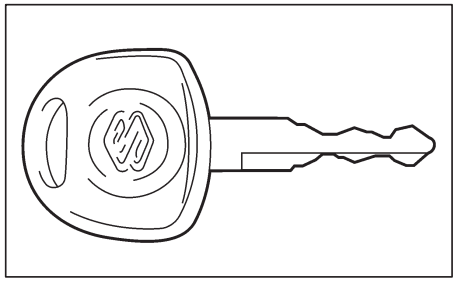

DTC P1610 SECRET KEY AND PASSWORD NOT REGISTERED

DTC DETECTING CONDITION AND TROUBLE AREA

DTC DETECTING CONDITION	TROUBLE AREA
SKC and PWD are not registered in ECM.	ECM

TROUBLE SHOOTING (DTC P1610)

STEP	ACTION	YES	NO
1	1) Register password and secret key by using SUZUKI scan tool. Refer to PROCEDURE AFTER ECM REPLACEMENT. 2) Check DTC. Is DTC P1610 still output?	Perform registration procedure again and recheck.	ECM is registered correctly.

DTC P1611 PASSWORD NOT MATCHED

DTC DETECTING CONDITION AND TROUBLE AREA

DTC DETECTING CONDITION	TROUBLE AREA
Password registered in ECM is not correct.	ECM

TROUBLE SHOOTING (DTC P1610)

STEP	ACTION	YES	NO
1	Register password and secret key by using scan tool. Turn ignition switch to OFF position and leave it for 5 seconds or more. Then turn ignition switch to ON position. Is DTC P1611 still output?	Substitute a known-good ECM according to PROCEDURE FOR ECM REPLACEMENT and recheck.	ECM is in good condition.

DTC P1612/P1613 NO SIGNAL FROM IMMOBILIZER

DTC DETECTING CONDITION AND TROUBLE AREA

DTC DETECTING CONDITION	TROUBLE AREA
Signal from immobilizer control module is not received correctly.	W-line circuit Immobilizer control module failure

TROUBLE SHOOTING (DTC P1612/1613)

STEP	ACTION	YES	NO
1	Is DTC B3040, B3042 or B3043 output at immobilizer control module?	W-line fail. Proceed to each DTC FLOW TABLE according to that DTC number. Check B3042 or B3043 first and then B3040 if two codes are output at the same time.	Go to step 2.
2	1) Ignition switch at OFF position and leave it for 5 seconds or more. 2) Pull out ignition key and reinsert it. 3) Turn ignition switch to run engine. Does engine start?	Temporary error in reading. Immobilizer control system is in good condition.	Substitute a known-good ECM according to PROCEDURE FOR ECM REPLACEMENT and recheck.

DTC P1614 INCORRECT SIGNAL FROM IMMOBILIZER

DTC DETECTING CONDITION AND TROUBLE AREA

DTC DETECTING CONDITION	TROUBLE AREA
Signal from immobilizer control module is not matched.	Ignition key with built-in transponder internally faulty SKC is not registered in transponder SKC key is not registered in ECM SKCs are different between ECM and transponder Unregistered ignition key with built-in transponder FIX CODE is detected No FIX CODE in immobilizer control module

TROUBLE SHOOTING (DTC P1614)

STEP	ACTION	YES	NO
1	Proceed DTC FLOW TABLE of DTC B3061. Recheck DTC. Is DTC P1614 still output?	Substitute a known-good ECM according to PROCEDURE FOR ECM REPLACEMENT and recheck.	ECM and immobilizer control module are programmed correctly.

DIAGNOSTIC TROUBLE CODE (DTC) CONFIRMATION PROCEDURE

1) Turn ignition switch to (I) or ( ) position.
2) Leave it for 5 seconds or more.
3) Check DTC. Refer to DTC CHECK in this section.

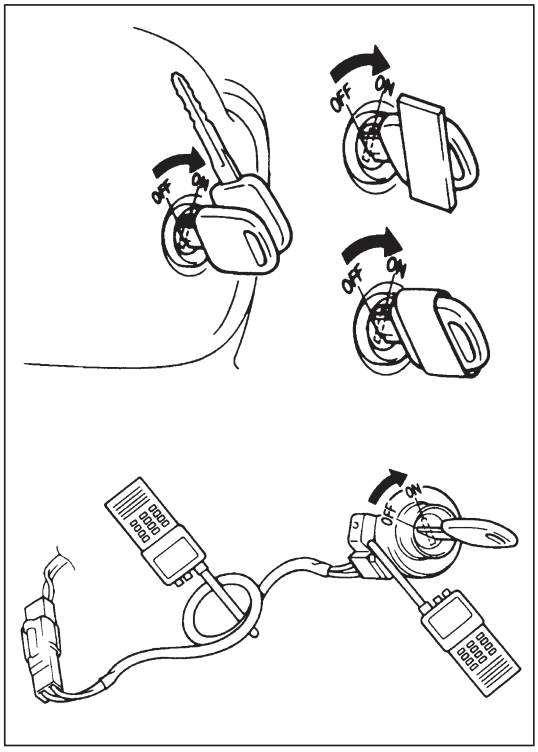

ON-VEHICLE SERVICE

PRECAUTIONS IN HANDLING IMMOBILIZER CONTROL SYSTEM

- Do not turn ignition switch to ON position (II) with ignition key with built-in transponder put together with another one or placed quite close to another one. Or the system may detect abnormal condition and prevent engine from running.
- Do not turn ignition switch to ON position (II) by using ignition key with built-in transponder with any type of metal wound around its grip (housing) or in contact with it. Or the system may detect abnormal condition and prevent engine from starting.
- Do not leave ignition key with built-in transponder where high temperature is anticipated. High temperature will cause transponder in ignition key to be abnormal or damaged.
- Do not turn ignition switch to ON position (II) with a radio antenna placed near coil antenna or its harness to immobilizer control module.
  Or the system may detect abnormal condition and prevent engine from starting.

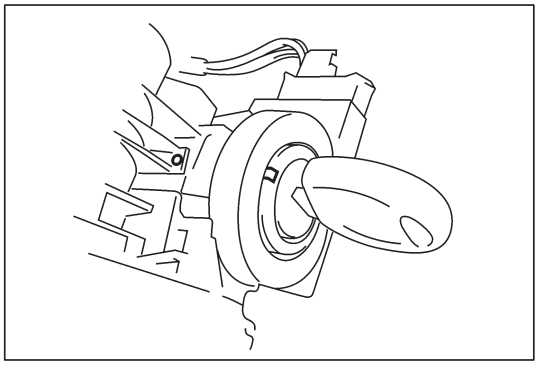

IMMOBILIZER CONTROL MODULE

REMOVAL

1) Remove steering column cover.
2) Remove key cylinder cap from key cylinder switch.
3) Turn ignition switch to (I) position.

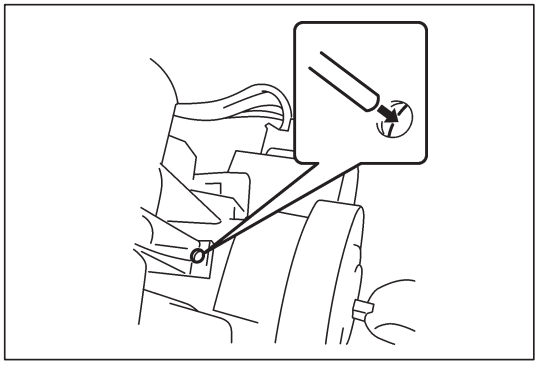

4) Push the protrusion in the hole.

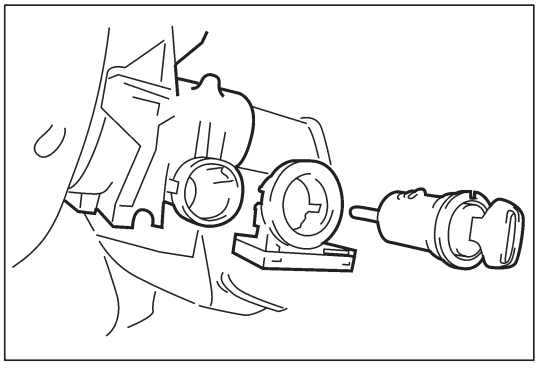

5) Pull off key cylinder from column ass'y.
6) Disconnect wire harness connector from immobilizer control module.
7) Remove immobilizer control module.

INSTALLATION

Reverse removal procedure. Before inserting key cylinder to steering column, push protrusion on key cylinder.

REGISTRATION PROCEDURE OF IMMOBILIZER SYSTEM COMPONENTS

IMMOBILIZER SYSTEM COMPONENTS REGISTRATION FLOW TABLE

When replacing any component of immobilizer system, perform registration procedure according to following flow table.

NOTE:

When replacing immobilizer control module and ECM at the same time, the ignition key with built-in transponder that has been registered to the system (SKC registered transponder) can not be used. Prepare new ignition key with built-in transponder (SKC unregistered transponder), and perform steps 1 to 4 as follows.

STEP	ACTION	YES	NO
1	DTC CHECK. Check for DTC referring to DTC CHECK. Are there DTC B1000, B3040, B3042, and/or B3043?	Proceed to each diagnostic flow table corresponding to that DTC number.	Go to step 2.
2	Confirmation of password registration. Is there DTC B3057?	Register password by referring HOW TO REGISTER PASSWORD. After completing, go to step 3.	Go to step 3.
3	ECM replacement. Is ECM replaced?	Proceed to PROCEDURE AFTER ECM REPLACEMENT. After completing, go to step 4.	Go to step 4.
4	Immobilizer control module replacement. Is immobilizer control module replaced?	Proceed to PROCEDURE AFTER IMMOBILIZER CONTROL MODULE REPLACEMENT.	Go to step 5.
5	Ignition key with built-in transponder registration. Is ignition key registered?	Proceed to HOW TO REGISTER IGNITION KEY.	End.

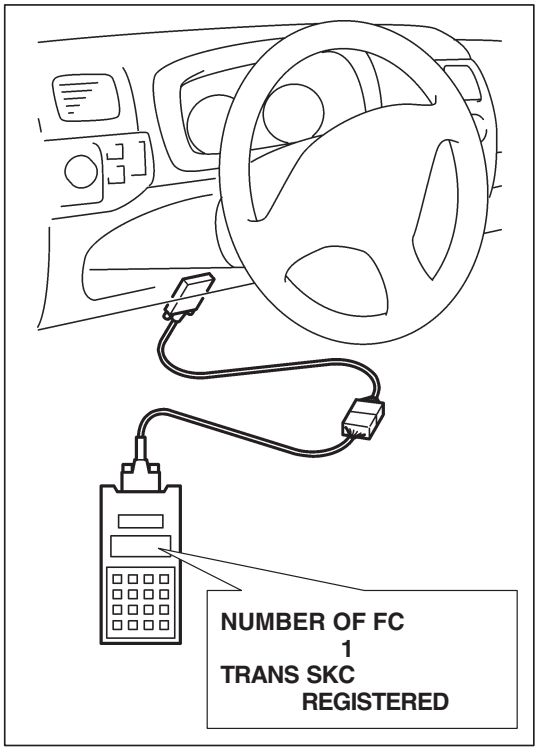

HOW TO REGISTER IGNITION KEY

Register ignition key with built-in transponder by performing the following procedure.

NOTE:
Registering secret key to ignition key with built-in transponder is able only once.

1) Perform IMMOBILIZER SYSTEM COMPONENTS REGISTRATION FLOW TABLE.
2) Prepare ignition key with built-in transponder to be registered for the vehicle.
   NOTE:
   As up to 5 ignition keys may be used for immobilizer control system, make sure that total number of ignition keys that are used for the vehicle is 5 or less.
3) Prepare SUZUKI scan tool and immobilizer cartridge. Connect SUZUKI scan tool to DLC with ignition switch at OFF position.
   NOTE:
   For operation procedure of SUZUKI scan tool, refer to its operator's manual.
4) Insert ignition key with built-in transponder to be registered to key cylinder and turn ignition switch to ON (II) position.
5) Check scan tool DATA LIST for "NUMBER OF FC", "TRANS SKC" and "FIX CODE".
   Turn ignition switch at OFF position and input password. If 5 ignition keys are already registered, clear all FIX CODEs registered in immobilizer control module by executing "CLEAR FC" command in IMMOBI CONT menu with scan tool.

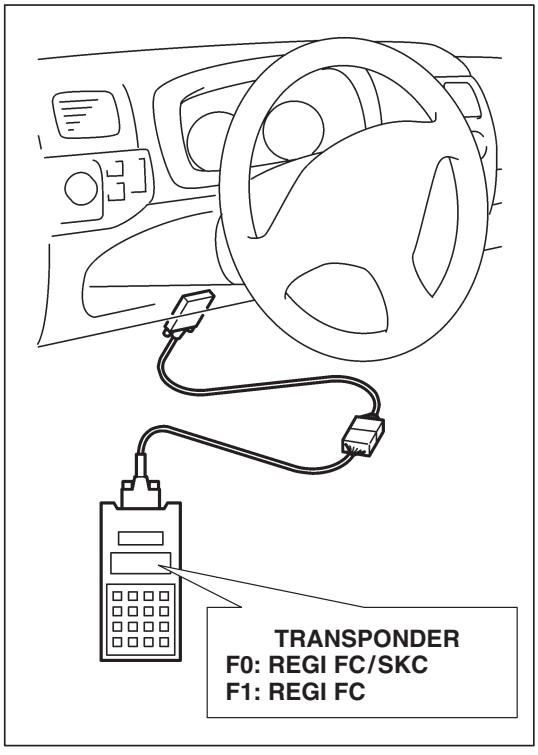

6) If FIX CODE is already registered in immobilizer control module and secret key in transponder is not registered, execute "CLEAR FC" command with scan tool.
7) By using scan tool, register FIX CODE (FC) to immobilizer control module and register secret key (SKC) to transponder by executing REGI FC/SKC command in TRANSPONDER under SELECT MODE menu with ignition switch at OFF position.
   If secret key is already registered in ignition key with built-in transponder, register FIX CODE by executing "REGI FC" at TRANSPONDER menu under SELECT MODE with ignition switch at OFF position.
8) After completing registration, turn ignition switch to ON position and check that registration is executed correctly by monitoring "FIX CODE REGISTERED" and "TRANS SKC REGISTERED" displayed on scan tool DATA LIST.
9) If there is other keys to registered, perform steps 4) to 8).

SEL PASSWORD MOD

F0: INPUT

F1: REGISTER

HOW TO REGISTER PASSWORD

1) Perform IMMOBILIZER SYSTEM COMPONENTS REGISTRATION FLOW TABLE.
2) Prepare SUZUKI scan tool and immobilizer cartridge. Connect Suzuki scan tool to DLC with ignition switch at OFF position.
   NOTE:
   For operation procedure of SUZUKI scan tool, refer to its operator's manual.
3) Register password by performing REGISTER in SEL PASSWORD MOD menu.

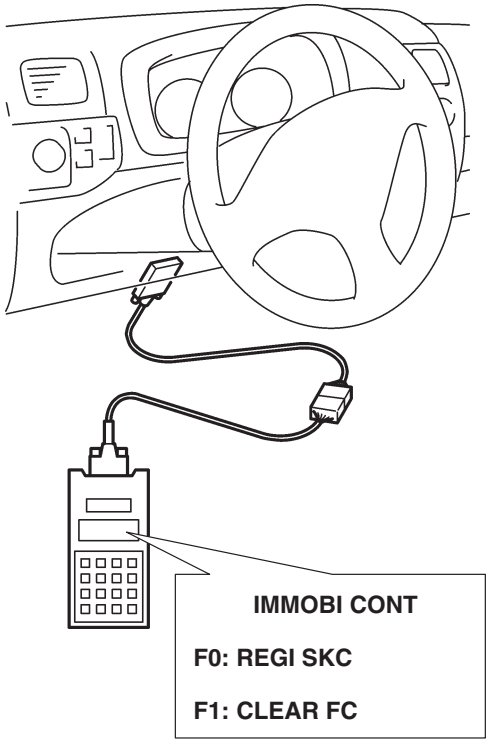

PROCEDURE AFTER IMMOBILIZER CONTROL MODULE REPLACEMENT

When immobilizer control module must be replaced including when replaced because rechecking by using a known-good immobilizer control module is necessary during trouble diagnosis, register FIX CODE (FC) and secret key (SKC) to immobilizer control module by performing the following procedure.

1) Perform IMMOBILIZER SYSTEM COMPONENTS REGISTRATION FLOW TABLE.
2) Prepare SUZUKI scan tool and IMMOBILIZER cartridge. Connect scan tool to DLC with ignition switch at OFF position.

   NOTE:
   For operation procedure of scan tool, refer to operator's manual.

3) Register secret key (SKC) by executing REGI SKC in IMMOBI CONT menu under SELECT MODE.

   CAUTION:
   Never execute REGI SKC/PWD in ECM menu under SELECT MODE during immobilizer control module registration procedure. Or the ignition key will be unusable.

4) Check for number of registered FIX CODEs by referring DATA LIST of scan tool. If any FIX CODEs are registered, clear FIX CODEs by executing CLEAR FC in IMMOBI CONT menu.
5) Register ignition key to immobilizer control module by referring HOW TO REGISTER IGNITION KEY.

ECM

F0: REGI SKC/PWD

PROCEDURE AFTER ECM REPLACEMENT

When ECM is replaced, including when replaced because rechecking by using a known-good ECM is necessary during trouble diagnosis, register password and secret key (SKC) to ECM by performing following procedure.

1) Perform IMMOBILIZER SYSTEM COMPONENTS REGISTRATION FLOW TABLE.
2) Prepare SUZUKI scan tool and IMMOBILIZER cartridge. Connect scan tool to DLC with ignition switch at OFF position.

   NOTE:
   For operation procedure of scan tool, refer to operator's manual.

3) Register password (PWD) and secret key (SKC) to ECM by executing REGI SKC/PWD command in ECM under SELECT MODE with scan tool.

   CAUTION:
   Never execute REGI SKC in IMMOBI CONT menu under SELECT MODE during ECM registration procedure. Or the ignition key will be unusable.

SPECIAL TOOLS

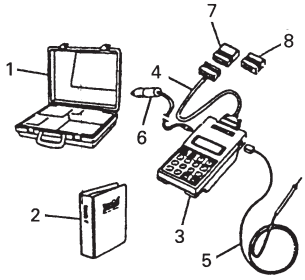 1. Storage case 2. Operator's manual 3. Tech-1A 4. DLC cable 5. Test lead/probe 6. Power source cable 7. DLC cable adapter 8. Self-test adapter 09931-76011 SUZUKI scan tool (Tech-1A) kit	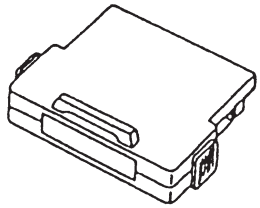 Mass storage cartridge/ Immobilizer cartridge	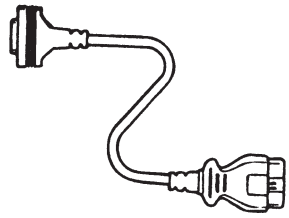 09931-76030 16/14 pin DLC cable

SECTION 9

BODY SERVICE

WARNING:
For vehicles equipped with Supplemental Restraint (Air Bag) System:
- **Service on and around the air bag system components or wiring must be performed only by an authorized SUZUKI dealer. Refer to "Air Bag System Components and Wiring Location View" under "General Description" in air bag system section in order to confirm whether you are performing service on or near the air bag system components or wiring. Please observe all WARNINGS and "Service Precautions" under "On-Vehicle Service" in air bag system section before performing service on or around the air bag system components or wiring. Failure to follow WARNINGS could result in unintentional activation of the system or could render the system inoperative. Either of these two conditions may result in severe injury.**
- **Technical service work must be started at least 90 seconds after the ignition switch is turned to the "LOCK" position and the negative cable is disconnected from the battery. Otherwise, the system may be activated by reserve energy in the Sensing and Diagnostic Module (SDM).**
- **When body servicing, if shock may be applied to air bag system component parts, remove those parts beforehand. (Refer to Section 10B.)**

NOTE:
Fasteners are important attaching parts in that they could affect the performance of vital components and systems, and/or could result in major repair expense. They must be replaced with one of the same part number of with an equivalent part if replacement becomes necessary.
Do not use a replacement part of lesser quality or substitute a design. Torque values must be used as specified during reassembly to assure proper retention of these parts.

CONTENTS

GLASS, WINDOWS AND MIRRORS

FRONT DOOR GLASS

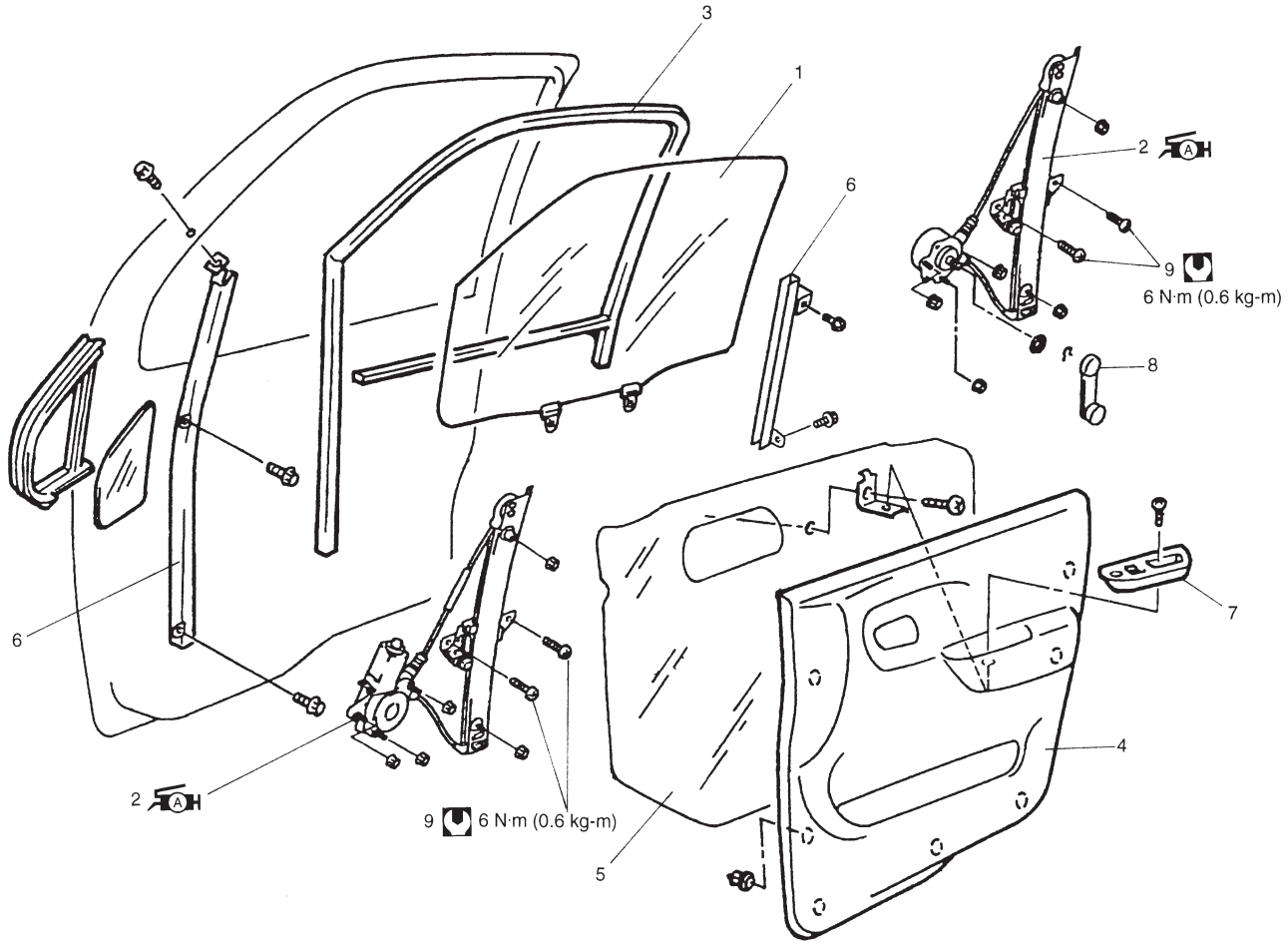

1. Door glass
2. Window regulator: Apply SUZUKI SUPER GREASE A(99000-25030) to sliding part.
3. Glass run
4. Door trim
5. Door sealing cover
6. Door sash
7. Power window switch assembly
8. Window regulator handle
9. Door glass mounting screw

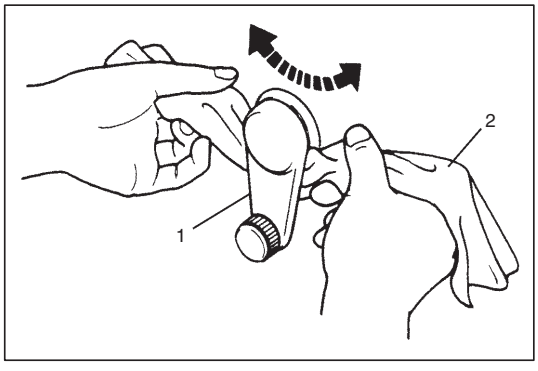

REMOVAL

1) Remove window regulator handle (1) (if equipped).
   For its removal, pull off snap by using a cloth (2) as shown in figure.

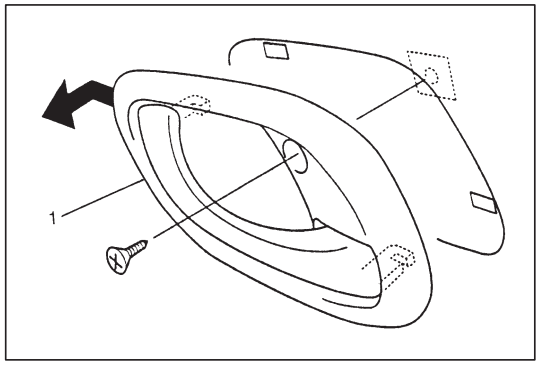

2) Remove inside handle bezel (1).
3) Remove inside lock knob and door trim fitting screw.

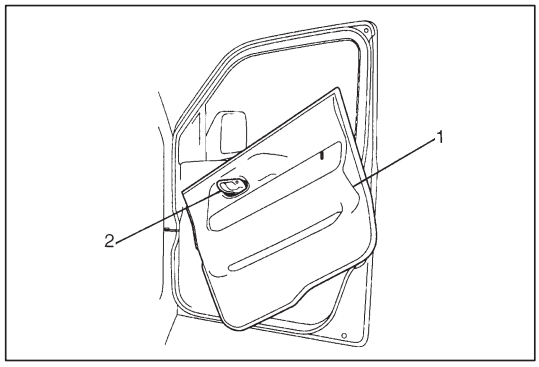

4) Remove door trim (1).
   With inside handle bezel (2) tilted as shown in figure, turn door trim (1) 90° counterclockwise to remove it.
   And disconnect power window switch lead wire at coupler (if equipped).

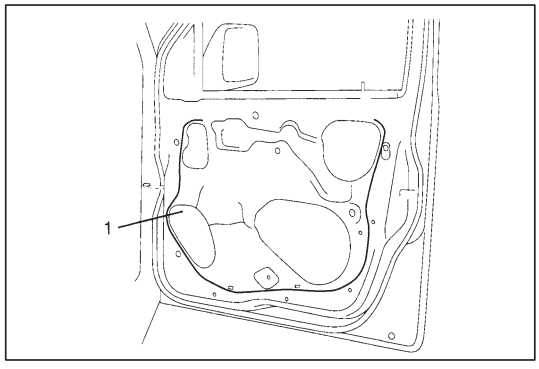

5) Remove door sealing cover (1).
6) Remove door mirror.
   Refer to “DOOR MIRROR” in this section.

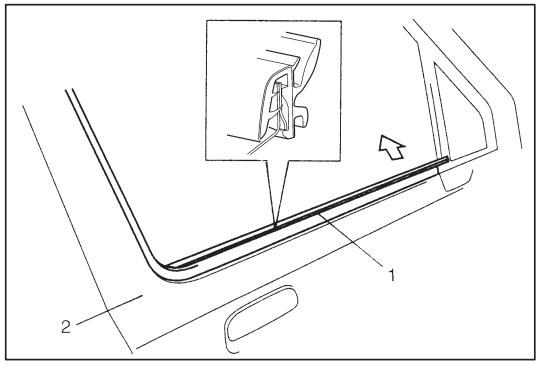

7) Remove glass run (1).
   Lower window all the way down. Then, use a tape-wrapped putty knife to pry off glass run.

   NOTE:
   When removed glass run (1) from door panel (2), be careful not to deformation for glass run (1).

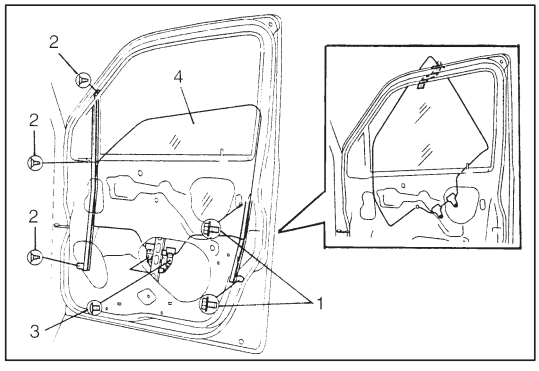

8) Remove door sash mounting bolts (1) and screws (2).
9) Remove glass attaching screws (3).
10) Take out door glass (4).

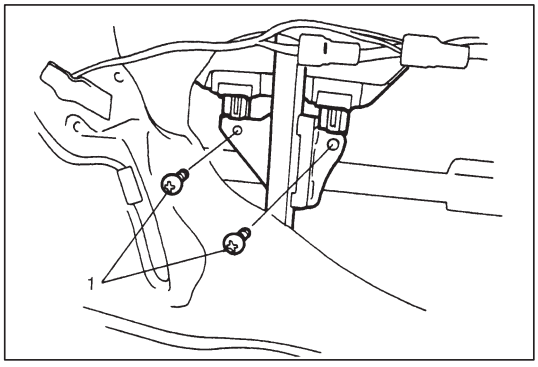

INSTALLATION

NOTE:

If there is deformity for glass run, replace new one.

Reverse removal procedure to install door glass noting the following points:

- Tighten glass attaching screws (1) to specified torque. Tighten rear screw first, then front screw.

  Tightening Torque: 6 N·m (0.6 kg-m, 4.3 lb-ft)

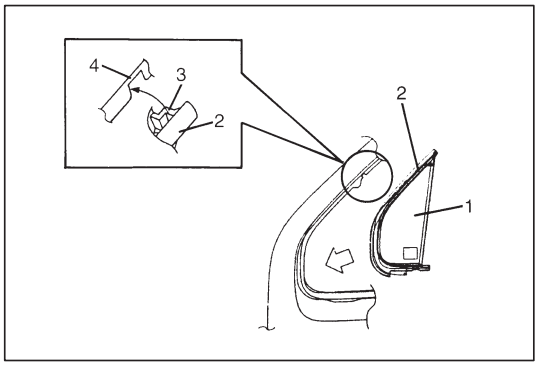

- When door window front glass (1) is installed, fit weatherstrip (2) convex part (3) to door panel cut part (4).

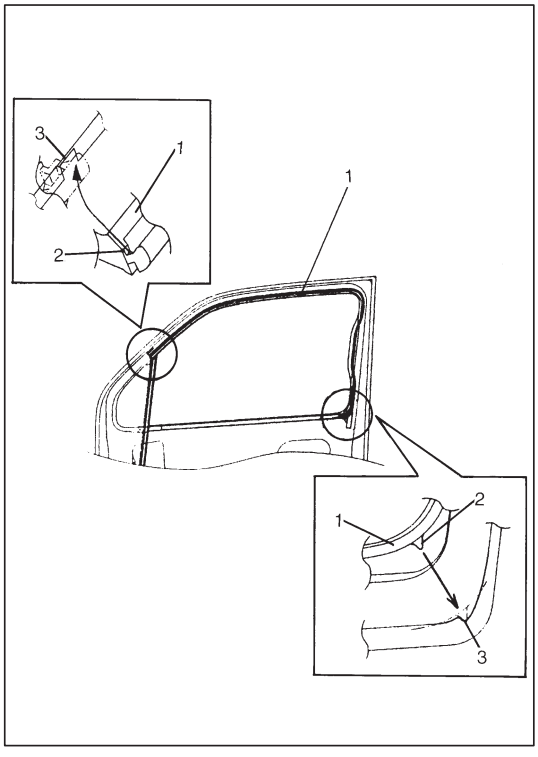

- When glass run (1) is installed, fit glass run convex part (2) to door panel cut part (3).

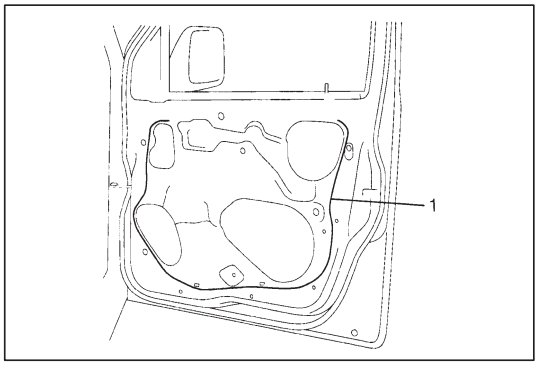

- Secure door sealing cover with adhesive (1).

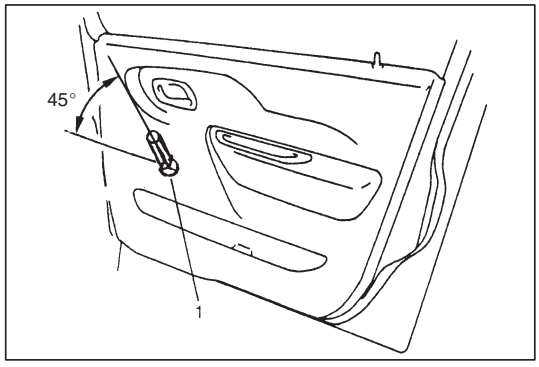

- Install door window regulator handle (1) so that it has a 45° angle when glass is fully closed, as shown in figure.

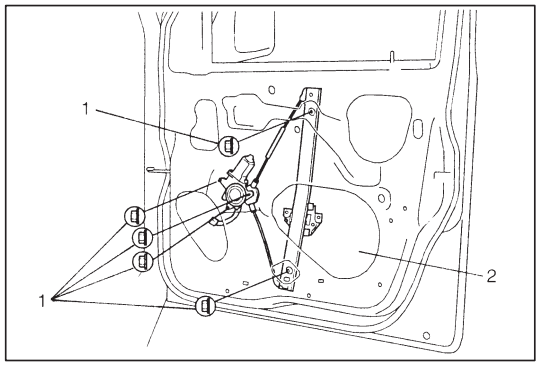

FRONT DOOR WINDOW REGULATOR

REMOVAL

1) Remove door glass, referring to steps 1) to 9) of FRONT DOOR GLASS REMOVAL in this section.
2) Disconnect power window motor lead wire at coupler and loosen clamp, if equipped.
3) Loosen regulator mounting nuts (1) and take out regulator through hole (2) as shown in figure.

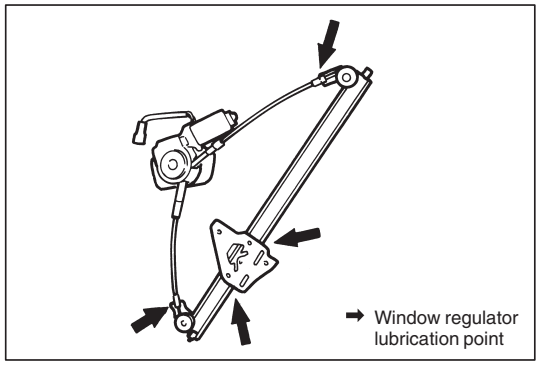

INSPECTION

1) Check regulator sliding and rotating parts for greasing.
2) Check rollers for wear and damage.
3) Check wire for damage.

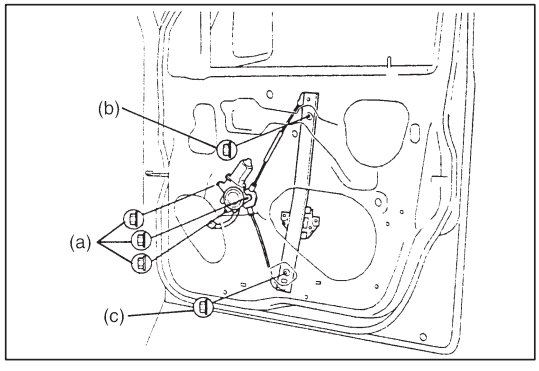

INSTALLATION

Reverse removal procedure to install window regulator noting the following.

- Tighten window regulator attaching nuts to proper tightening order.

  Tightening Order: (a) → (b) → (c)

- Tighten door glass attaching screws to specified torque. Refer to “FRONT DOOR GLASS” in this section.

DOOR MIRROR

REMOVAL AND INSTALLATION

When removing or installing door mirror, refer to figure shown below.

- Tightening Order: (a) → (b)

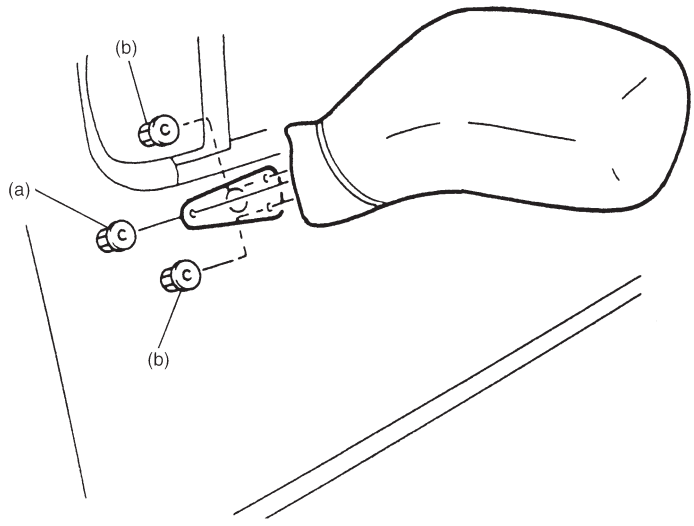

REAR DOOR GLASS

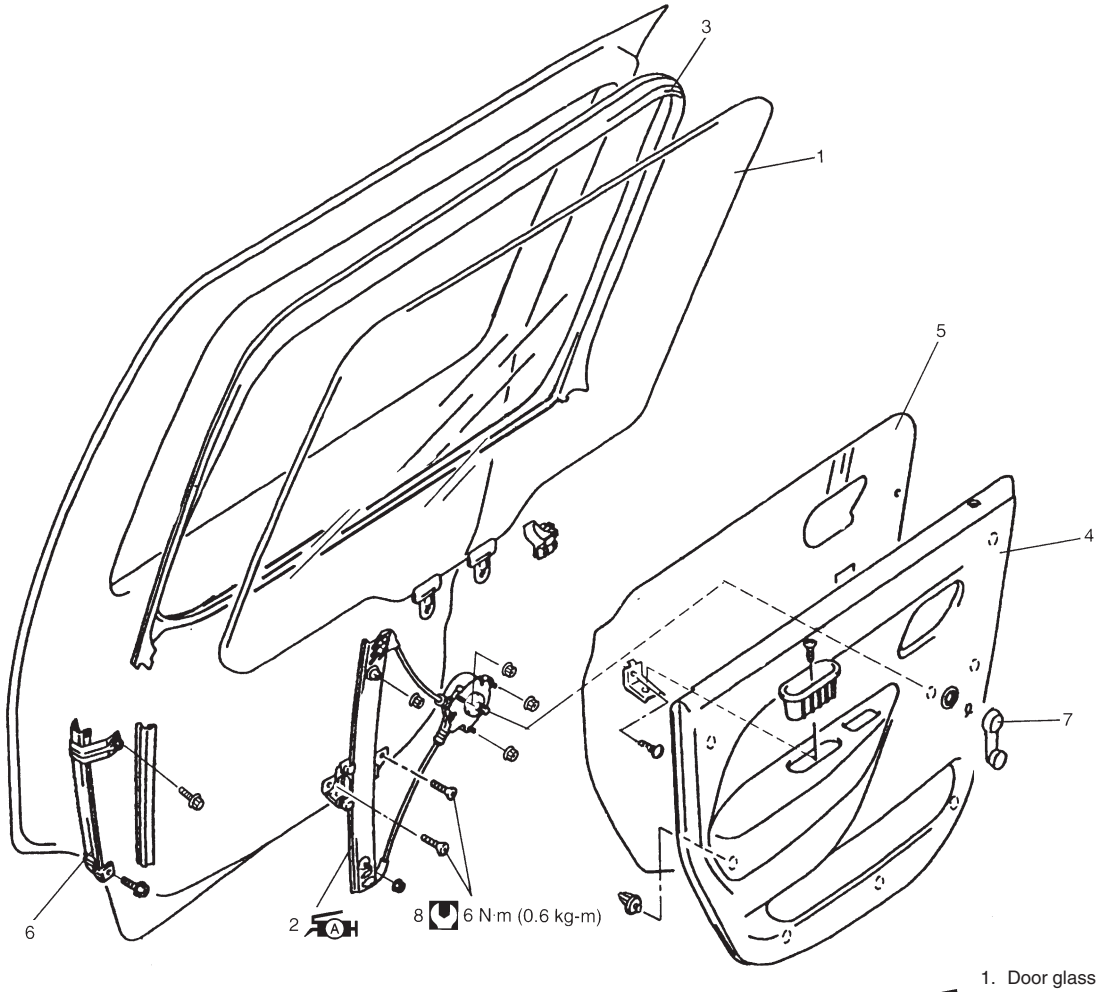

1. Door glass
2. Window regulator: Apply SUZUKI SUPER GREASE A (99000-25010) to moving section.
3. Glass run
4. Door trim
5. Door sealing cover
6. Door sash
7. Window regulator handle
8. Door glass mounting screw

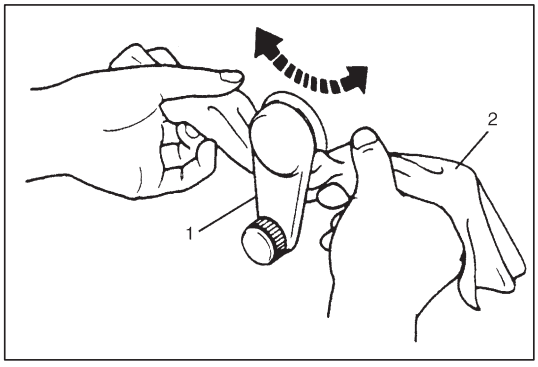

REMOVAL

1) Remove window regulator handle (1).
   For its removal, pull off snap by using a cloth (2) as shown in figure.

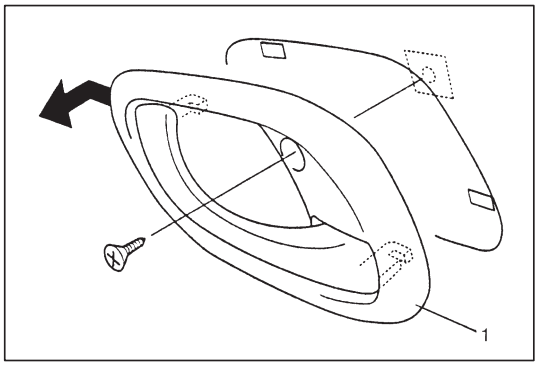

2) Remove inside handle bezel (1).
3) Remove inside lock knob and door trim fitting screw.

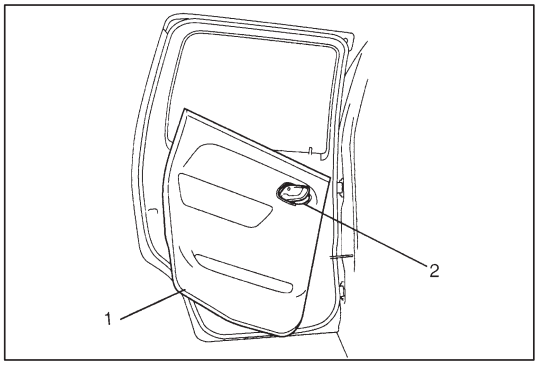

4) Remove door trim (1).
   With inside handle bezel (2) tilted as shown in figure, turn door trim 90° counterclockwise to remove it.

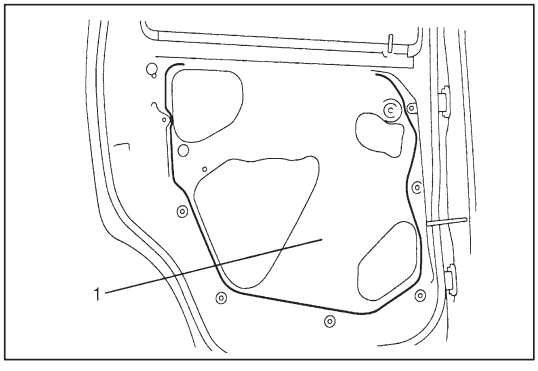

5) Remove door sealing cover (1).

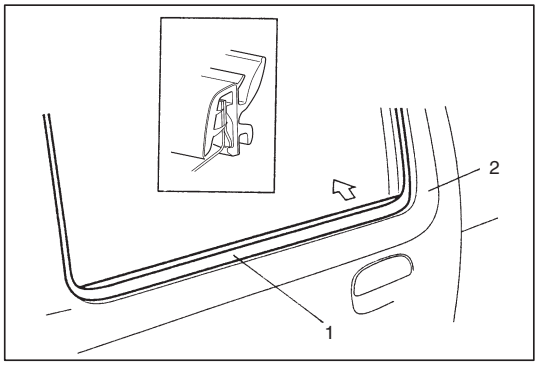

6) Remove glass run (1).
   Lower window all the way down. Then, use a tape-wrapped putty knife (or screwdriver) to pry off glass run.

   NOTE:
   When removed glass run (1) from door panel (2), be careful not to deformation for glass run (1).

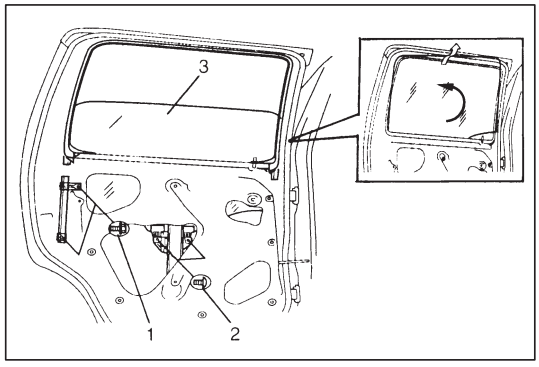

7) Remove door sash mounting bolts (1).
8) Remove glass attaching screws (2).
9) Turn door glass (3) 90°.
10) Take out door glass (3).

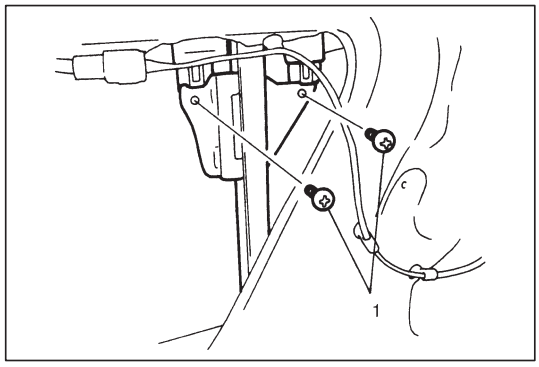

INSTALLATION

NOTE:

If there is deformity for glass run, replace new one.

Reverse removal procedure to install door glass noting following points:

- Tighten glass attaching screws (1) to specified torque. Tighten rear screw first, then front screw.

  Tightening Torque: 6 N·m (0.6 kg-m, 4.3 lb-ft)

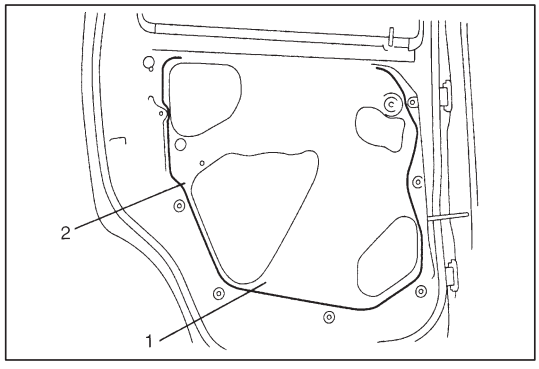

- Secure door sealing cover (1) with adhesive (2).

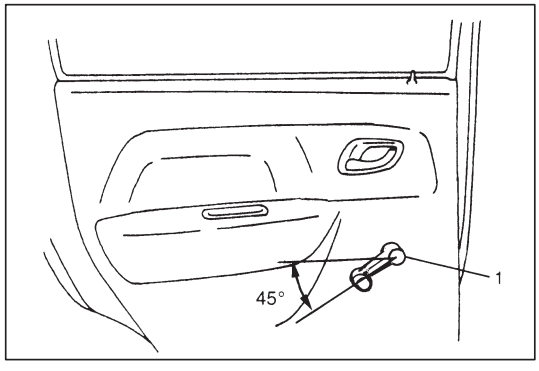

- Install door window regulator handle (1) so that it has a 45° angle when glass is fully closed, as shown in left figure.

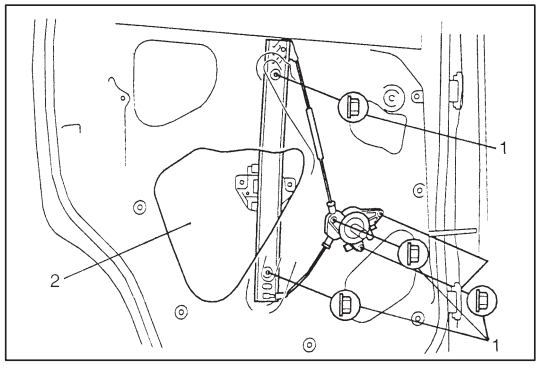

REAR DOOR WINDOW REGULATOR

REMOVAL

1) Remove door glass, referring to steps 1) to 9) of REAR DOOR GLASS REMOVAL in this section.
2) Loosen regulator mounting nuts (1) and take out regulator through hole (2) as shown in left figure.

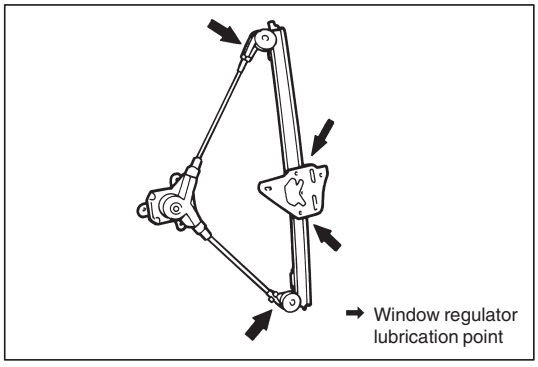

INSPECTION

1) Check regulator sliding and rotating parts for greasing.
2) Check rollers for wear and damage.
3) Check wire for damage.

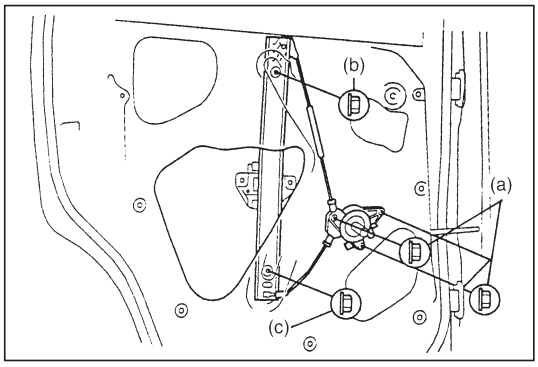

INSTALLATION

Reverse removal procedure to install window regulator noting following.

- Tighten window regulator attaching nuts to proper tightening order.

  Tightening Order: (a) → (b) → (c)

- Tighten door glass attaching screw to specified torque. Refer to “REAR DOOR GLASS” in this section.

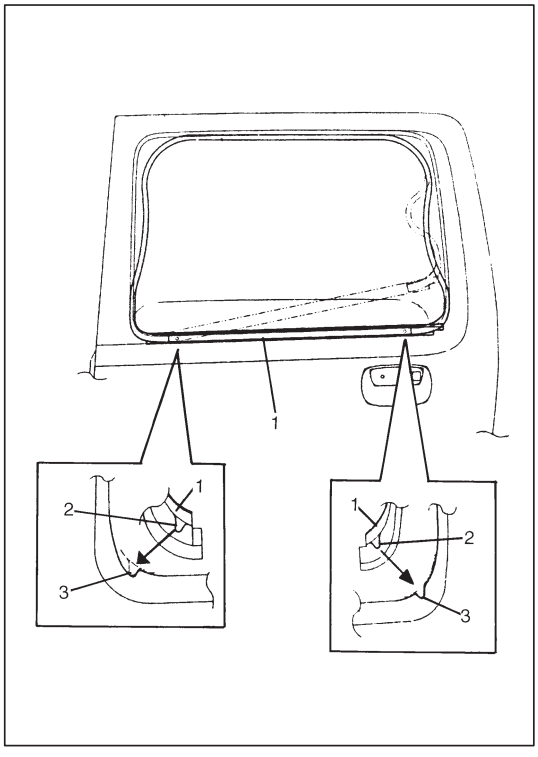

- When glass run (1) is installed, fit glass run convex part (2) to door panel cut part (3).

WINDOW SHIELD

The front windshield is installed by using a special type of adhesive (that is, one component urethane adhesive used with primer). For the Windshield replacement, it is important to use an adhesive which provides sufficient adhesion strength and follow the proper procedure.

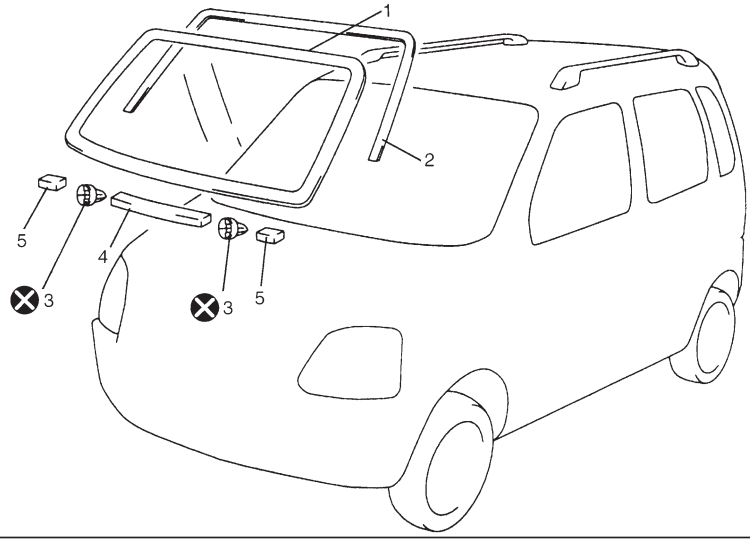

1. Windshield glass
2. Windshield molding
3. Stopper
4. Center spacer
5. Side spacer

⊗ : Do not reuse

CAUTION:

- **Described in this section is the glass replacement by using 3 types of primers and 1 type of adhesive made by YOKOHAMA (one component urethane adhesive to be used with primer in combination). When using primer and adhesive made by other manufacturers, be sure to refer to handling instructions supplied with them. Negligence in following such procedure or misuse of the adhesive in any way hinders its inherent adhesive property. Therefore, before the work, make sure to read carefully the instruction and description given by the maker of the adhesive to be used and be sure to follow the procedure and observe each precaution throughout the work.**
- **Should coated surface be scratched or otherwise damaged, be sure to repair damaged part, or corrosion may start from there.**

Use an adhesive of above mentioned type which has the following property.

Shearing strength: 40 kg/cm^2 (569 lb/in^2) or more

Adhesive materials and tools required for removal and installation.

- One component urethane adhesive and primers used in combination (For one sheet of windshield).
  Adhesive (470 g (15.7 oz.))
  Primer for glass (30 g (1.0 oz.))
  Primer for body (30 g (1.0 oz.))
  Primer for molding (30 g (1.0 oz.))
- Eyeleteer
- Piano string
- Windshield knife
- Brush for primer application (2 pcs)
- Knife
- Rubber sucker grip
- Sealant gun (for filling adhesive)
- Putty spatula (for correcting adhered parts)

REMOVAL

1) Clean both inside and outside of glass and around it.
2) Remove wiper arms and garnish.
3) Using tape, cover body surface around glass to prevent any damage.
4) Remove rear view mirror, sunvisor, and front pillar trims (right & left).
5) If necessary, remove instrument panel. Refer to “INSTRUMENT PANEL” in this section.
6) If necessary, remove head lining. Refer to “HEAD LINING” in this section.
7) Remove (or cut) windshield molding.

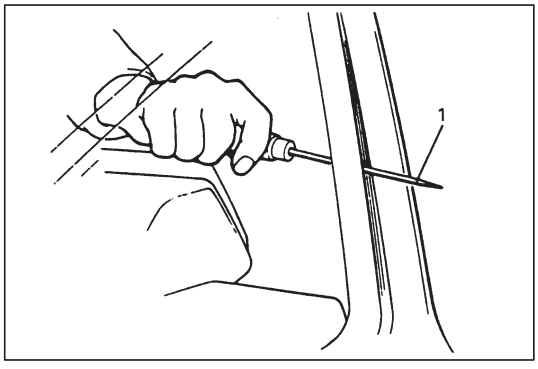

8) Drill hole with eyeletter (1) through adhesive and let piano string through it.

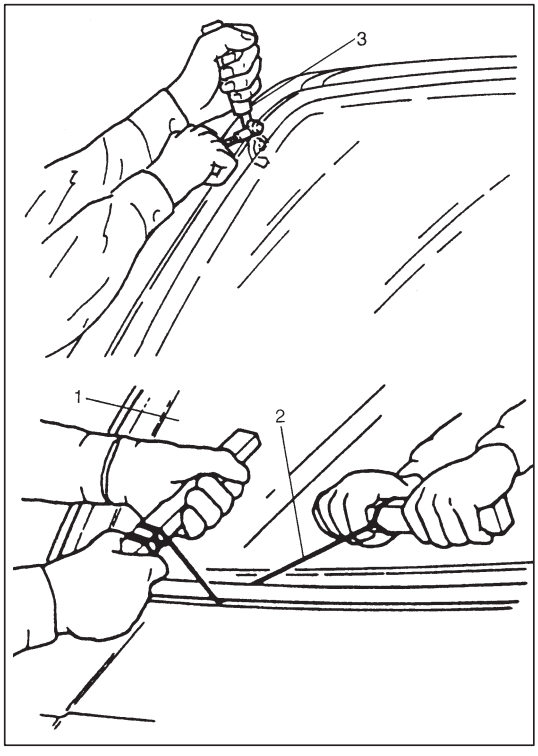

9) Cut adhesive all around windshield (1) with piano string (2). When using tool, windshield knife (3), to cut adhesive, be careful not to cause damage to windshield. Use wire to cut adhesive along lower part of windshield.

NOTE:
Use piano string as close to glass as possible so as to prevent damage to body and instrument panel.

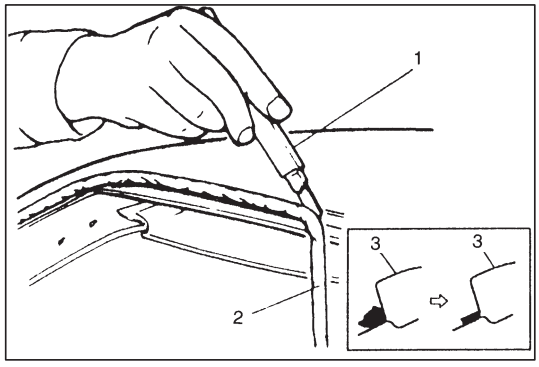

10) Using knife (1), smoothen adhesive (2) remaining on body side (3) so that it is 1 to 2 mm thick all around.

NOTE:
Before using knife, clean it with alcohol or the like to remove oil from it.

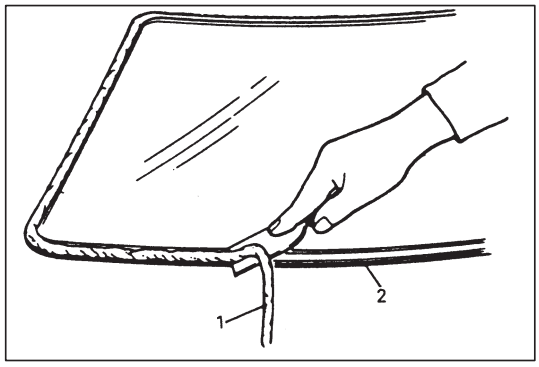

11) When reusing windshield, remove the adhesive (1) from it, using care not to damage primer coated surface (2).

INSTALLATION

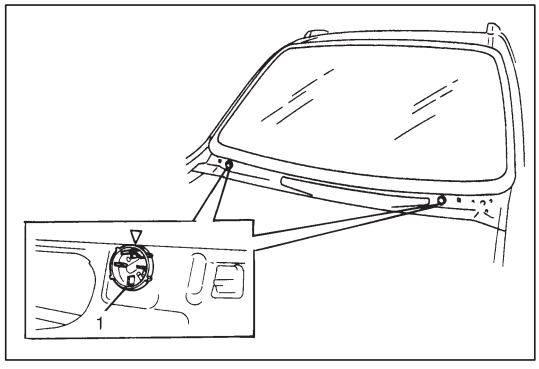

1) Using cleaning solvent, clean windshield edge where windshield glass is to be adhered. (Let it dry for more than 10 minutes.)
2) Install new glass stoppers (1) (2pcs) to lower side of windshield.

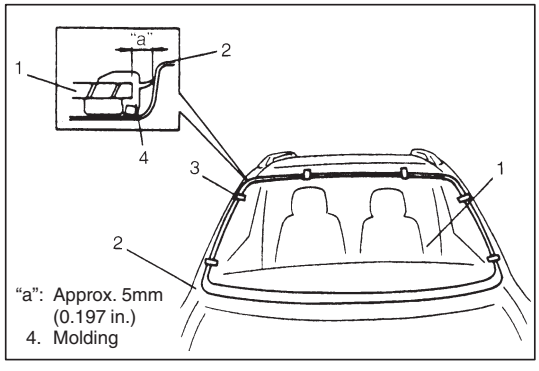

3) To determine installing position of glass (1) to body (2), position glass against body so that clearance between upper end of glass (1) and body (2) is about 5 mm (0.197 in.) and clearances between each side end (right & left) of glass (1) and body (2) are even. Then mark mating marks (3) on glass (1) and body (2) as shown. Upper clearance can be adjusted by moving stoppers position.

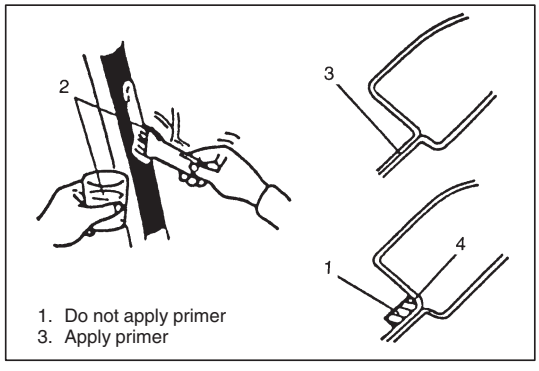

4) Clean contact surfaces of old adhesive (4), paint or bare metal thoroughly.
If surfaces of paint or bare metal come out, apply primer (2) for body with caution not to apply primer (2) to surface of adhesive remaining on body.

NOTE:
- **Be sure to refer to primer maker's instruction for proper handling and drying time.**
- **Do not touch body and old adhesive surfaces where glass is to be adhered.**

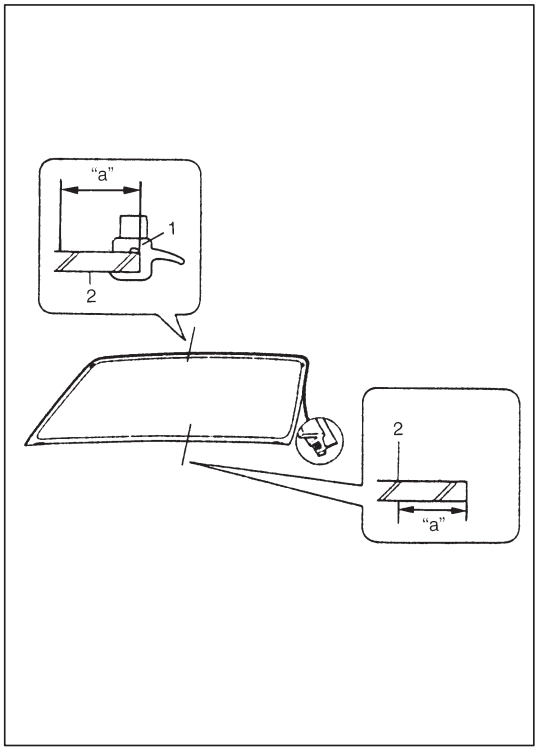

5) Install new molding (1) to glass (2).
6) Clean glass surface to be adhered to body with clean cloth. If cleaning solvent is used, let it dry for more than 10 minutes.

Cleaning Area
Distance from the edge of glass
"a": 30 – 50 mm (1.18 – 1.97 in.)

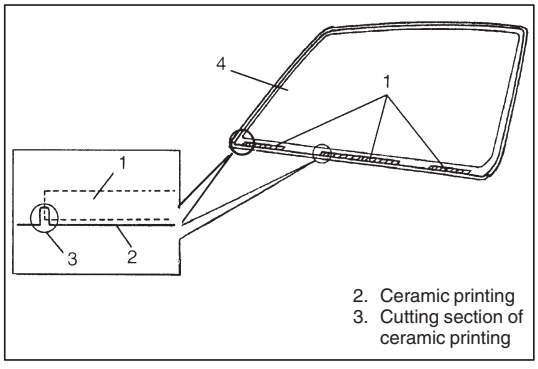

7) Install new spacer (1) to glass (4).

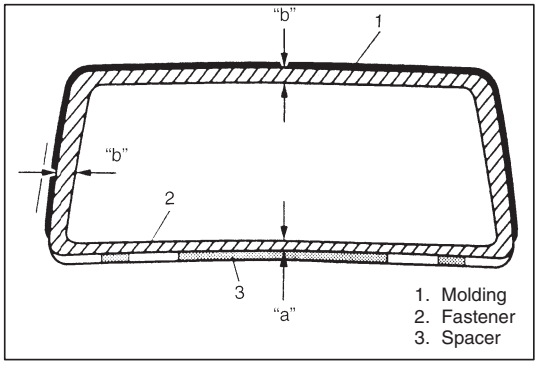

8) Using new brush, apply sufficient amount of primer for glass along glass surface to be adhered to body.

NOTE:
- **Be sure to refer to maker's instruction for proper handling and drying time.**
- **Do not apply primer on outside of ceramic coated surface.**
- **Do not touch primer coated surface.**
  Width "a": 22 mm (0.87 in.)
  "b": 15 mm (0.59 in.)

9) Apply primer for molding along molding surface all around as shown in figure.

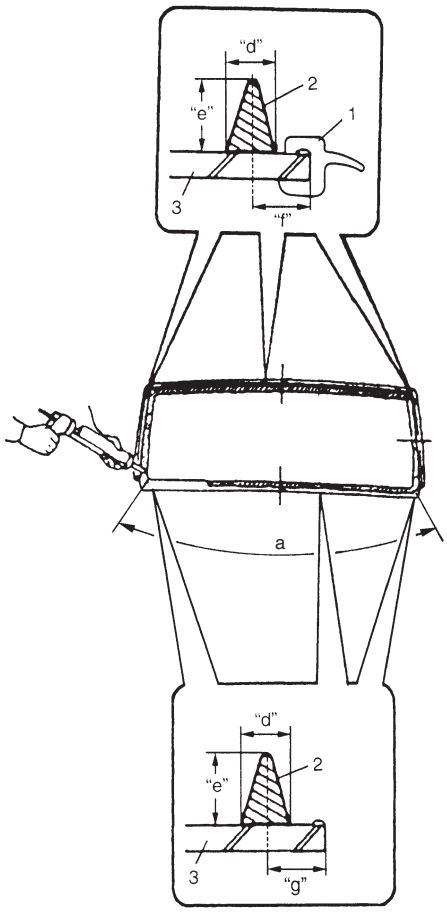

1. Molding

10) Apply adhesive referring to figure.

NOTE:
- **Start from bottom side of glass (3).**
- **Be careful not to damage primer.**
- **Height of adhesive (2) applied to lower side should be higher than that of other three sides.**

Upper, right and left sides

Width	**"d": Approx. 7 mm (0.27 in.)**
Height	**"e": Approx. 15 mm (0.59 in.)**
Position	**"f" : Approx. 10 mm (0.39 in.)**
	"g": Approx. 17 mm (0.67 in.) section "a"

- **Press glass (3) against fittings surface of body panel quickly after adhesive (2) is applied.**
- **Use of rubber sucker grip is helpful to hold and carry glass after adhesive (3) is applied.**
- **Perform steps 8) to 9) within 10 min. to ensure sufficient adhesion.**
- **Be sure to refer to adhesive maker's instruction for proper handling and drying time.**

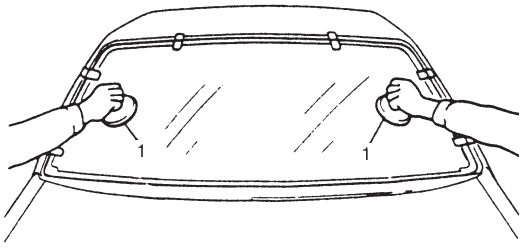

11) Holding rubber sucker grips (1), place glass onto body by aligning mating marks marked in step 3) and press it.

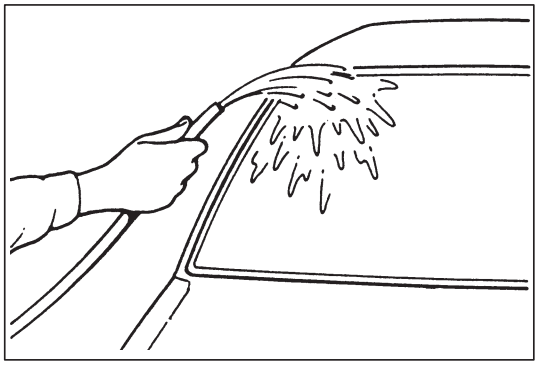

12) Check for water leakage by pouring water over windshield through hose. If leakage is found, dry windshield and fill leaky point with adhesive. If water still leaks even after that, remove glass and start installation procedure all over again.

NOTE:
- **Do not use high pressure water.**
- **Do not blow compressed air directly at adhesive applied part when drying.**
- **Do not use infrared lamp or like for drying.**

CAUTION:
Upon completion of installation, note the following.
- **Sudden closing of door before adhesive is completely set may cause glass to become loose or to come off. Therefore, if door is opened or closed before adhesive is completely set, make sure to open all door glasses and use proper care.**
- **If molding is not securely in place, hold it down with a tape until adhesive is completely set.**
- **Each adhesive has its own setting time.**
  Be sure to refer to its maker's instruction, check setting time of adhesive to be used and observe precautions to be taken before adhesive is set.
- **Refrain from driving till adhesive is completely set so as to ensure proper and sufficient adhesion.**

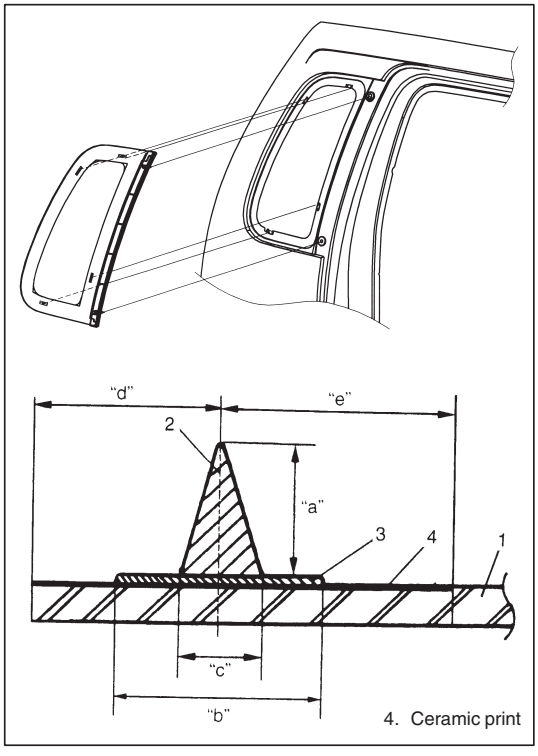

4. Ceramic print

QUARTER WINDOW

REMOVAL AND INSTALLATION

Refer to "WINDSHIELD" section as removal and installation procedures are basically the same. However, note the following.

NOTE:
Observe the following precautions when applying adhesive (2) along glass (1) edge.
- **Adhesive (2) should be applied evenly especially in height.**
- **Be careful not to damage primer (3).**
- **Press glass against body quickly after adhesive (2) is applied.**

Height	**"a"**	**: 10 mm (0.39 in.)**
Width	**"b"**	**: 14 mm (0.55 in.)**
	"c"	**: 6 mm (0.24 in.)**
Position	**"d"**	**: 9.5 mm (0.37 in.) for glass lower section.**
		: 11 mm (0.43 in.) for glass rear section.
		: 8.5 mm (0.33 in.) for glass upper section.
	"e"	**: 27.5 mm (1.1 in.) for glass front section.**

BACK DOOR GLASS

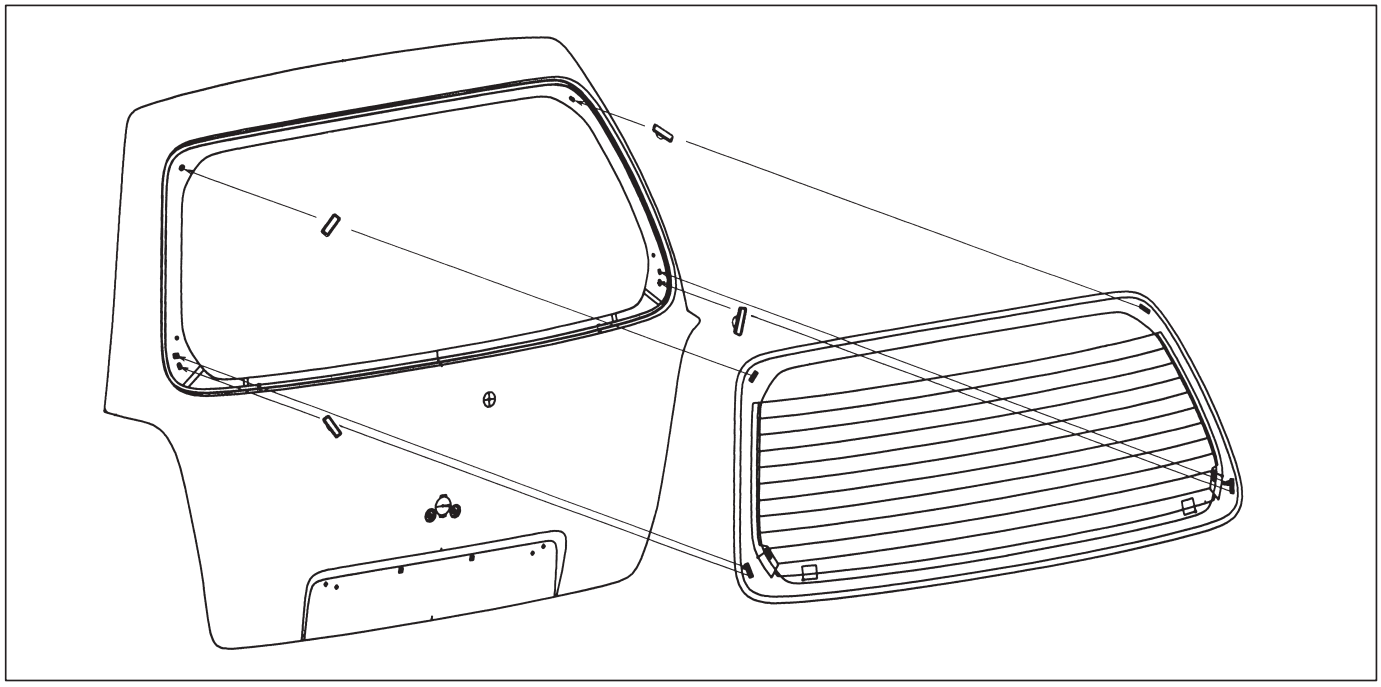

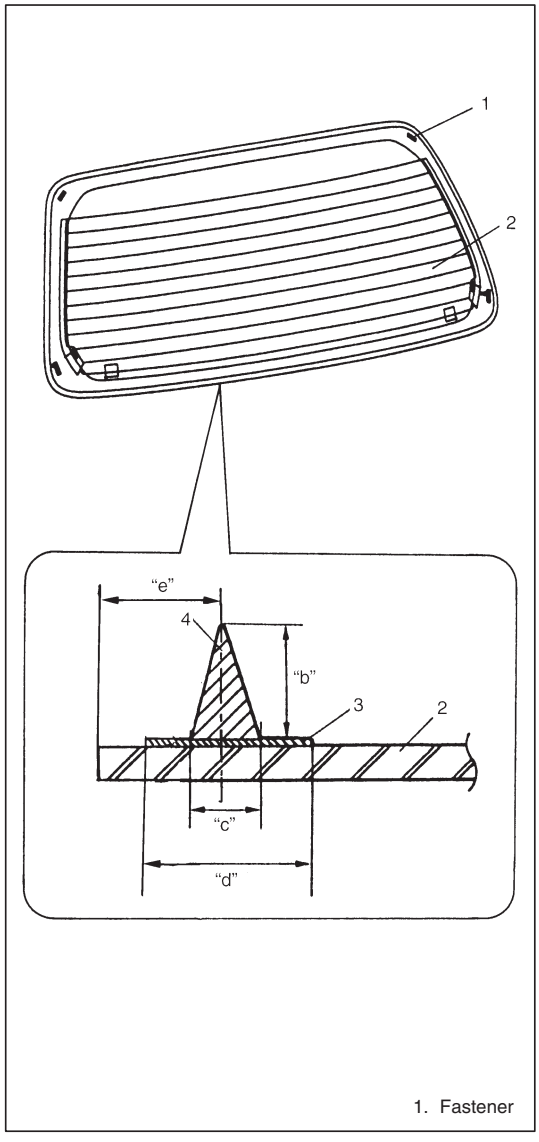

1. Fastener

REMOVAL AND INSTALLATION

Refer to "WINDSHIELD" section as removal and installation procedures are basically the same. However, note the following.

NOTE:

Observe the following precautions when applying adhesive (4) along glass (2) edge.

- **Adhesive (4) should be applied evenly especially in height.**
- **Be careful not to damage primer (3).**
- **Press glass against body quickly after adhesive (4) is applied.**

Height	**"b"**	**: 15 mm (0.59 in.)**
Width	**"c"**	**: 7 mm (0.28 in.)**
Width	**"d"**	**: 16 mm (0.63 in.)**
Clearance	**"e"**	**: 13 mm (0.51 in.)**

BODY STRUCTURE

FRONT AND REAR DOOR ASSEMBLY

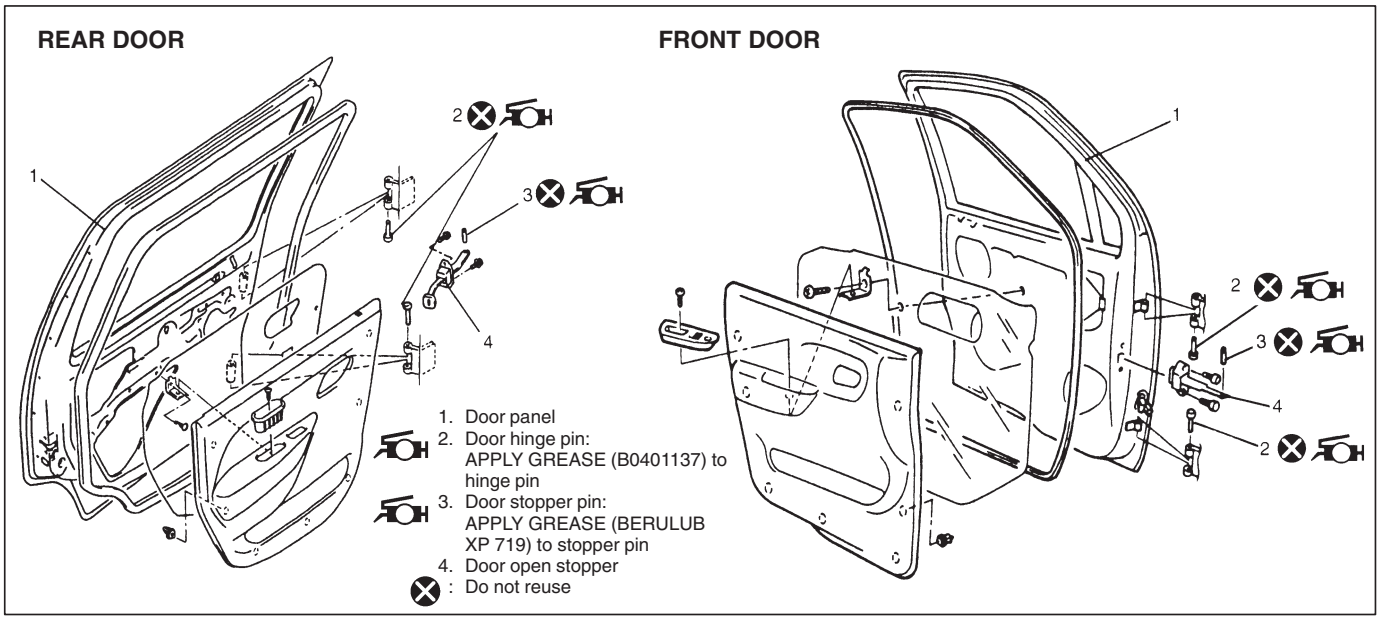

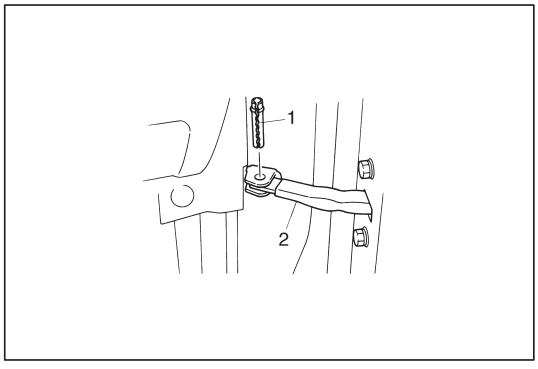

FRONT DOOR ASSEMBLY

REMOVAL

1) Remove front fender.
2) Disconnect door harness lead wires at each coupler.
3) Remove stopper pin (1) from door open stopper (2).

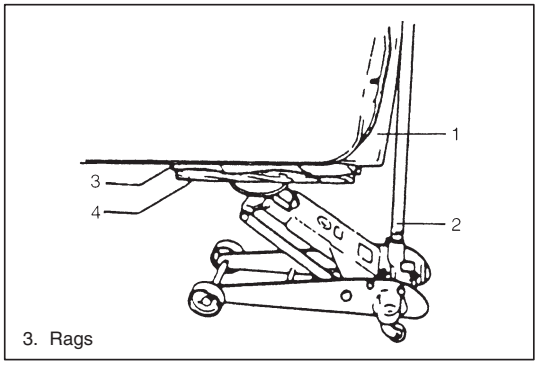

4) Support door panel (1) using a jack (2) with a piece of wood placed (4) between jack (2) and panel (1), as shown.

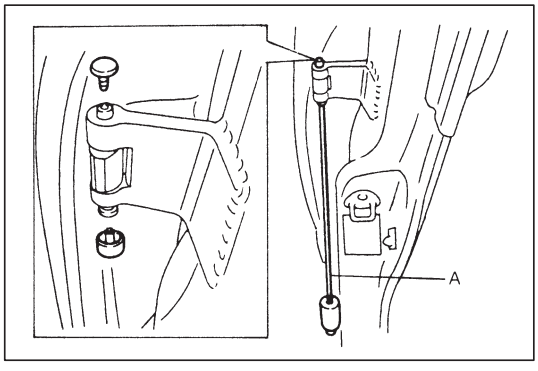

5) Remove door hinge pin by using special tool (A).

   Special Tool A: 09960-48330

6) Remove door assembly.

INSTALLATION

Reverse removal procedure to install door assembly, noting the following points.

NOTE:
When replacing door, coat replacement door inside with wax for proper anticorrosion treatment.
Refer to "UNDERCOATING/ANTI-CORROSION COMPOUND APPLICATION AREA" in "BODY REPAIR MANUAL".

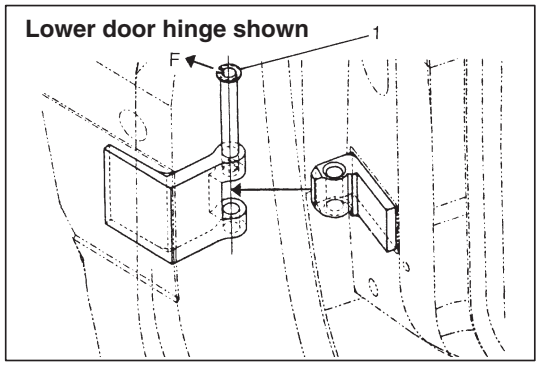

- When door hinge pin (1) is installed to install door to body, turn hinge pin cut section to vihecle forward.

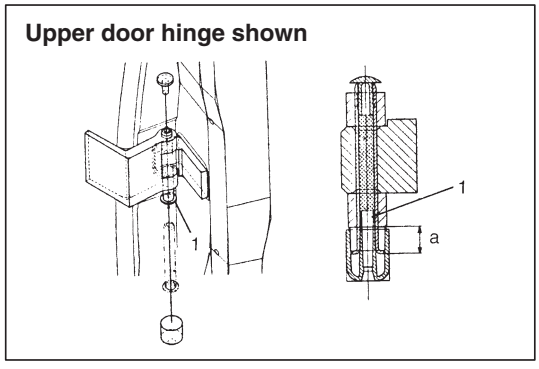

- Drive in door hinge pin (1) as become follow dimensions "a".

  Dimension "a": 10 mm (0.4 in.)

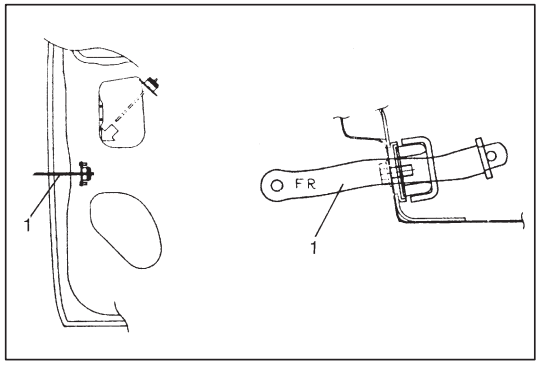

- When door open stopper (1) is installed, be care full to face side or reverse side or door open stopper.

  Front right side door : FR caved seal is face.
  Front left side door : FL caved seal is face.

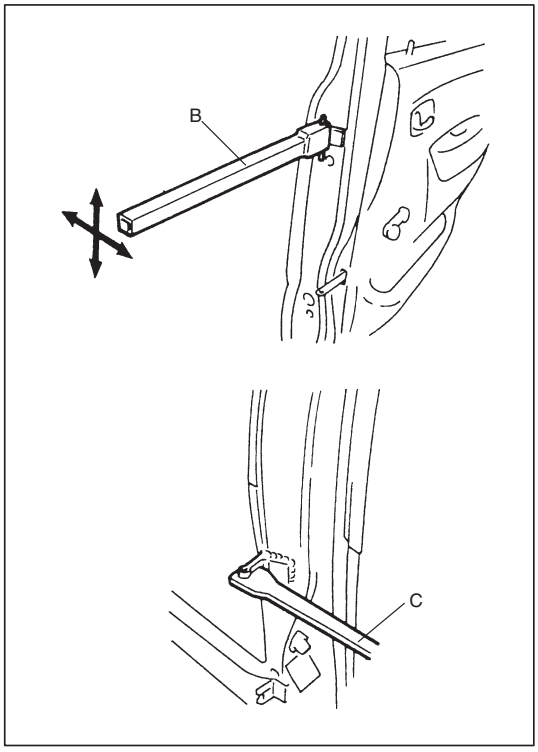

- Adjust door clearance as following procedure.

  Using special tool (B), (C) and adjust clearance between rear door and body at the beginning, refer to “PANEL CLEARANCE” in this section.
  Next, adjust clearance between front door and body, front door and rear door, refer to “PANEL CLEARANCE” in this section.

  Special Tool B: 09960-48320
  C: 09960-48310

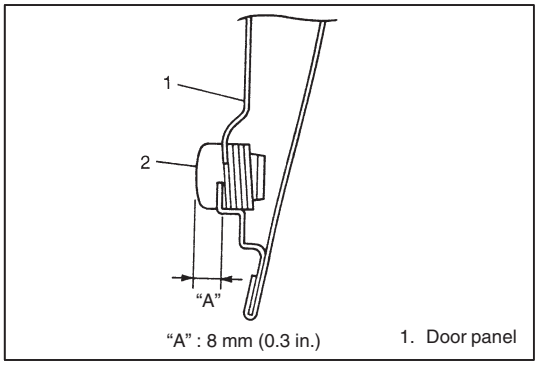

- Adjust door latch striker position by referring to “FRONT DOOR LOCK INSTALLATION” Section so that door is positioned correctly.
- Adjust front door cushion (2) into dimension (A) so that bring cushion into contact with body panel when the door is closed.
- After installation, open and close the door to check looseness. Replace door open stopper pin when there is looseness.
- When weatherstrip is hardened, water leak may develop. In such case, replace it with new one.
- Apply grease to rotating part of door hinge.

REAR DOOR ASSEMBLY

REMOVAL/INSTALLATION

Follow procedures for Front Door removal/installation in this section.

BACK DOOR ASSEMBLY

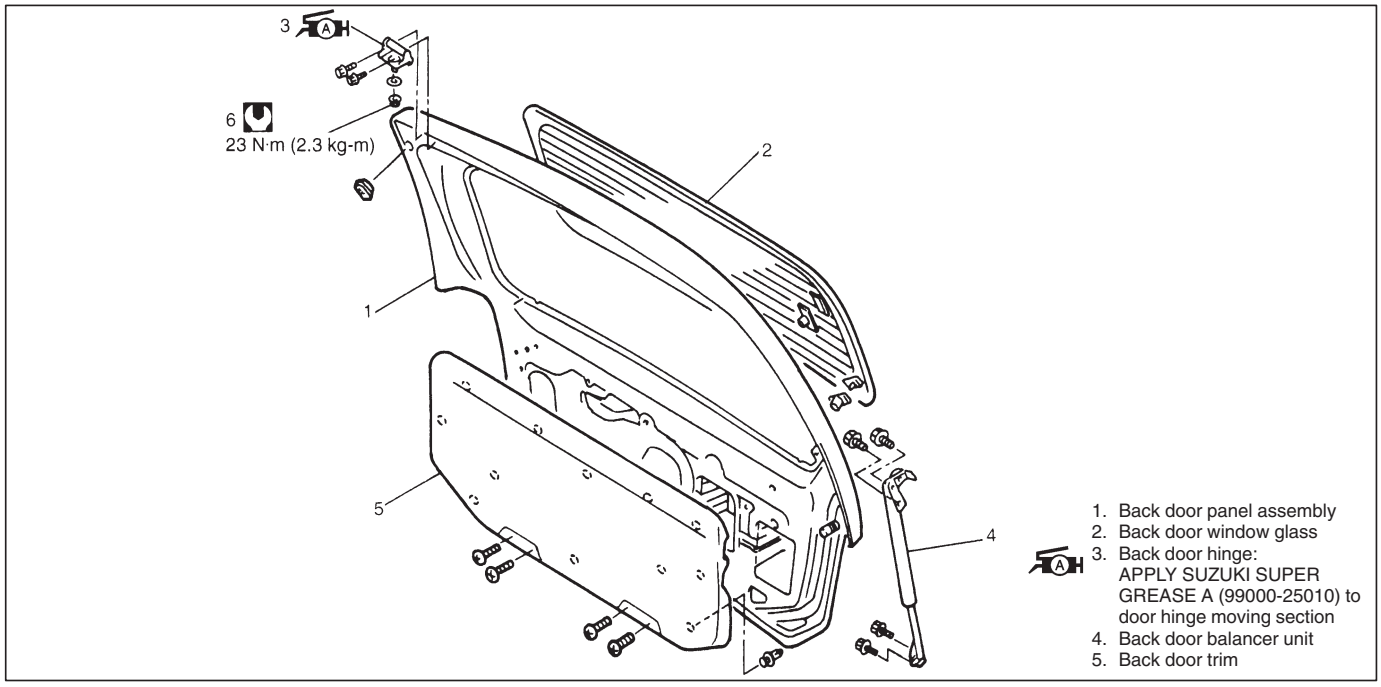

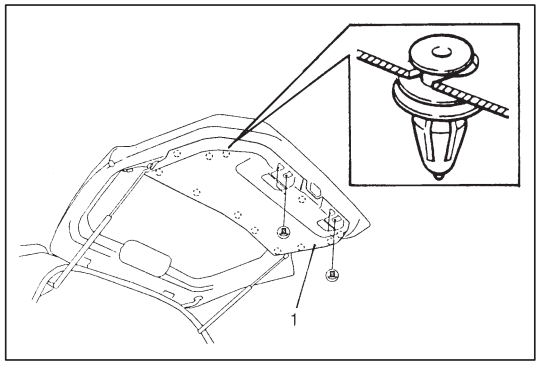

REMOVAL

1) Remove back door trim (1).
2) Remove rear section of head lining and quater trim.

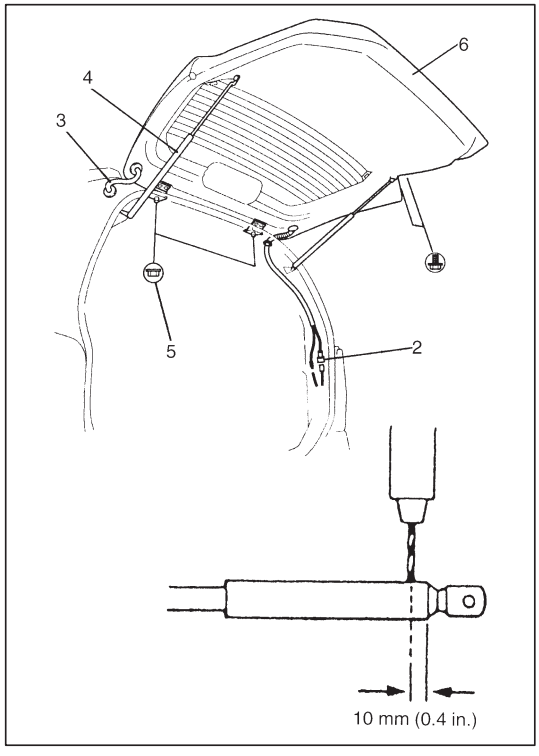

3) Disconnect back door harness connector (2) and washer hose (3).
4) Remove back door balancer (4) (first at its door side and next at its body side).
5) Remove door hinge nuts (5) and remove back door assembly (6).

WARNING:
Handling of Back Door Balancer (Damper)

- **Do not disassemble balancer because its cylinder is filled with gas.**
- **Handle balancer carefully. Do not scar or scratch exposed surface of its piston rod, and never allow any paint or oil to stick to its surface.**
- **Do not turn piston rod with balancer fully extended.**
- **When discarding removed back door balancer (damper), use a 2 to 3 mm (0.08 to 0.12 in.) drill to make a hole as shown.**
- **The gas itself is harmless but it may issue out of the hole together with chips generated by the drill. Therefore, be sure to wear goggle.**

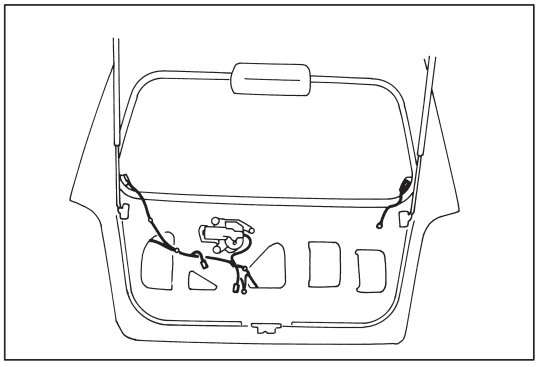

INSTALLATION

Reverse removal procedure to install back door noting the following points.

- Secure wiring harness.

- Adjust door latch striker position by referring “BACK DOOR LOCK ASSEMBLY INSTALLATION” so that door is positioned correctly.
- Adjust door cushion so that door contacts body when closed.
- Adjust door clearance by loosening door hinge mounting bolts and nuts referring to “PANEL CLEARANCE” in this section.
- Apply grease to hinge rotating part.
- Tighten door hinge mounting nut to specified torque.

Tightening Torque: 23 N·m (2.3 kg-m, 17.0 lb-ft)

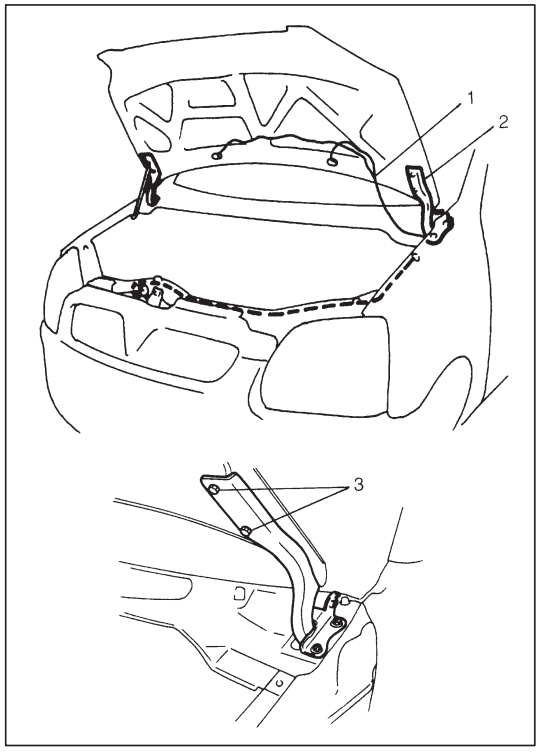

HOOD

REMOVAL

1) Remove window washer hose (1) from hood (2).
2) Remove four mounting bolts (3) to detach hood (2).

INSTALLATION

Reverse removal procedure to install hood.

ADJUSTMENT

Hood position adjustment.
Fore-and-aft and right-and-left adjustment.
Adjust hood clearance by loosening hood mounting bolts, refer to "PANEL CLEARANCE" in this section.

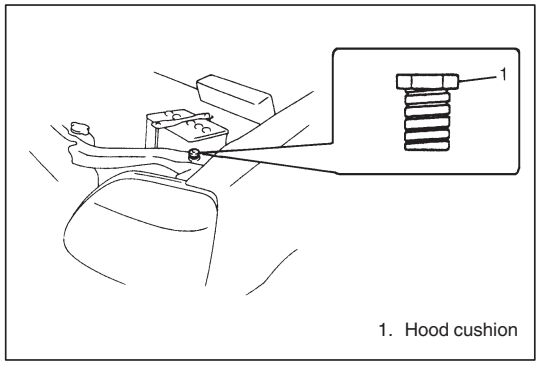

1. Hood cushion

3) Vertical adjustment
   If only one side (right or left) of hood is not level with front fender, make it level by tightening or loosening hood cushion.

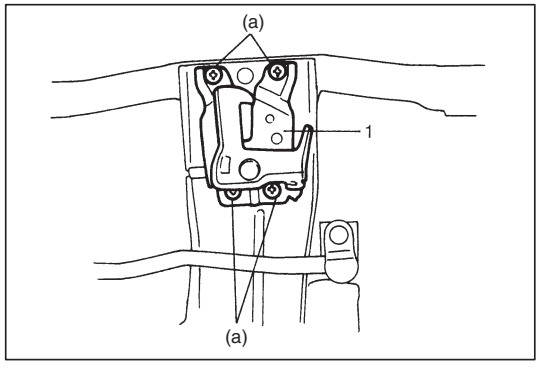

4) Hood lock position adjustment
   When installing hood lock (1), bring bolt at highest position and move it in vertical direction for adjustment free from loose to hood striker.

   Tightening Torque
   (a): 10 N·m (1.0 kg-m, 7.0 lb-ft)

INSPECTION

Check that hood opens and closes smoothly and properly. Lubricate if necessary. Also check that secondary latch operates properly (check that secondary latch keeps hood from opening all the way) and hood locks securely when closed.
Adjust hood locks position if necessary.

FRONT FENDER

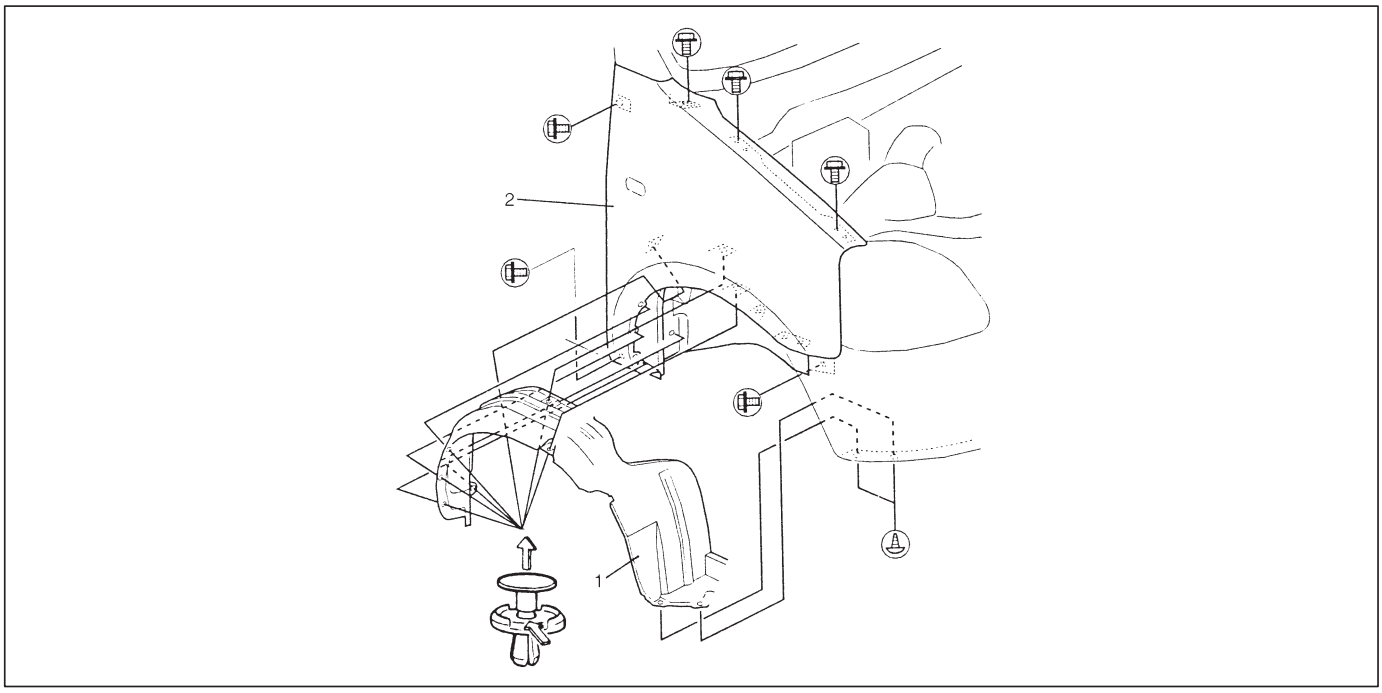

REMOVAL

1) Remove front bumper.
2) Disconnect connector of side turn signal (or side marker) lamp.
3) Remove front fender lining (1).
4) Remove front fender (2).

INSTALLATION

Reverse removal procedure for installation.

NOTE:

If paint on fender bolt is peeled off, be sure to apply paint again.

Adjust panel clearance referring to “PANEL CLEARANCE” in this section.

FRONT BUMPER AND REAR BUMPER

NOTE:
Fasteners are important attaching parts in that they could affect the performance of vital components and systems, and/or could result in major repair expense. They must be replaced with one of the same part number or with an equivalent part if replacement becomes necessary.
Do not use a replacement part of lesser quality or substitute design. Torque values must be used as specified during reassembly to assure proper retention of these parts.

FRONT BUMPER

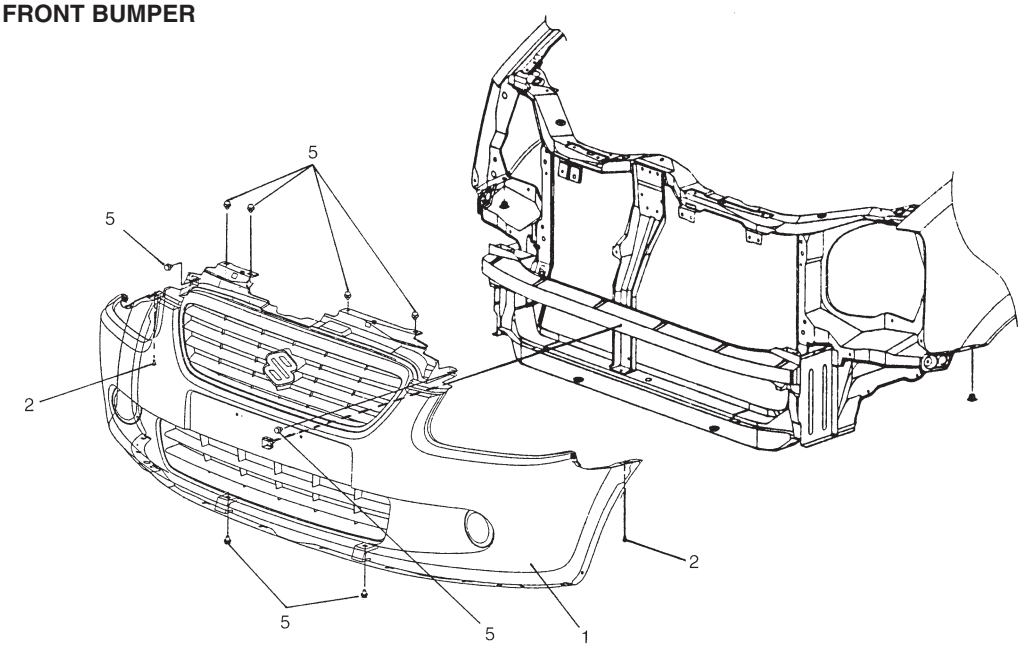

REAR BUMPER

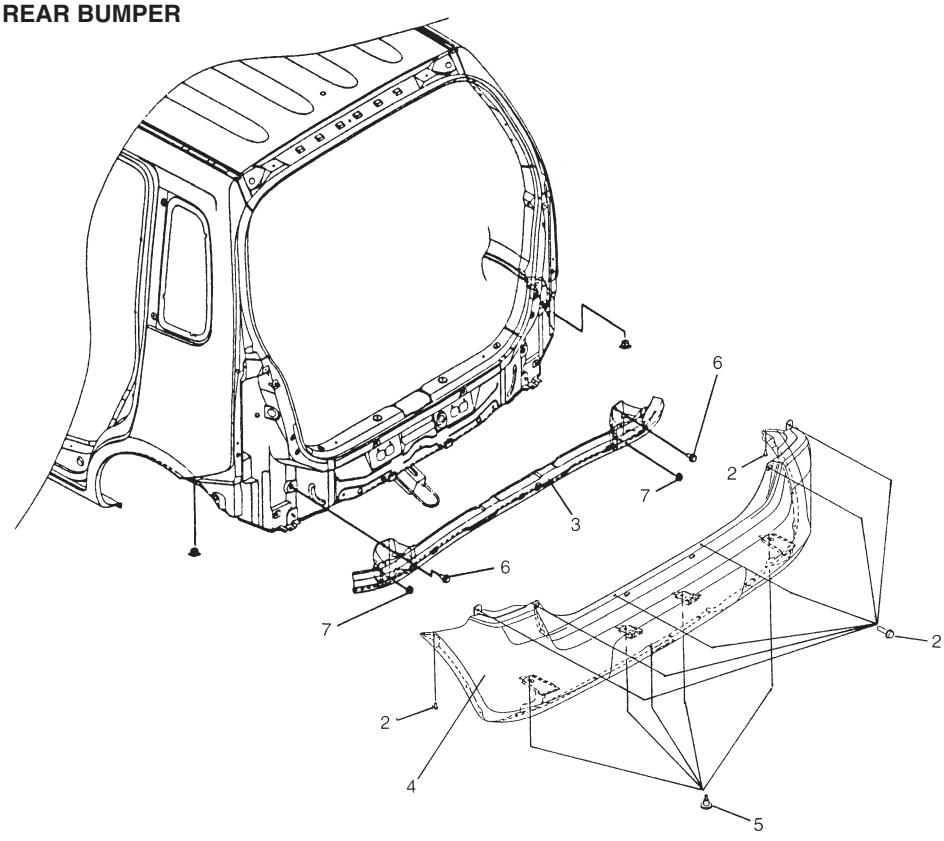

1. Front bumper
2. Screws
3. Rear bumper member
4. Rear bumper
5. Clips
6. Bolts
7. Nuts

INSTRUMENTATION AND DRIVER INFORMATION

INSTRUMENT PANEL

WARNING:
See WARNING at the beginning of this section.

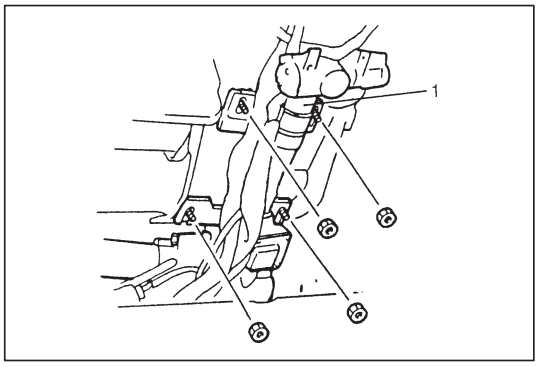

REMOVAL

1) Disconnect negative (–) cable at battery.
2) Disable air bag system, if equipped.
   Refer to “Disabling Air Bag System” in Section 10B.
3) Remove steering column assembly (1).
   Refer to Section 3C.

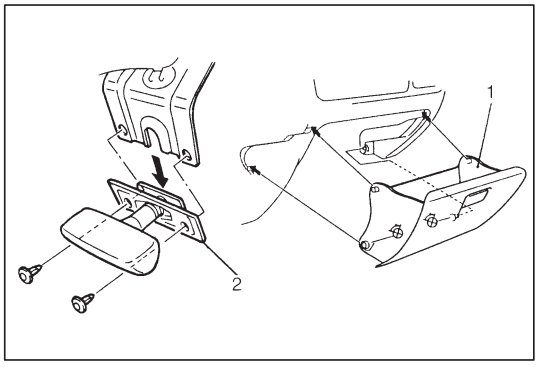

4) Remove glove box (1) and hood latch release lever (2).

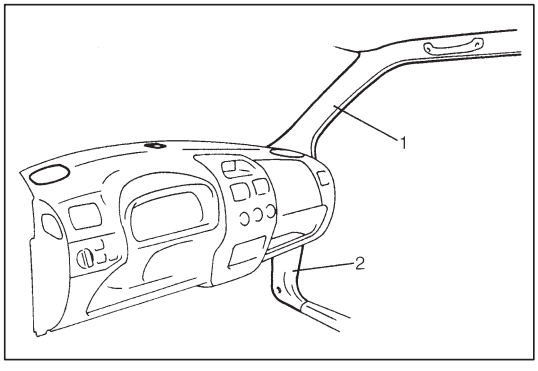

5) Remove both sides front pillar inner trim (1) and dash side trim (2).

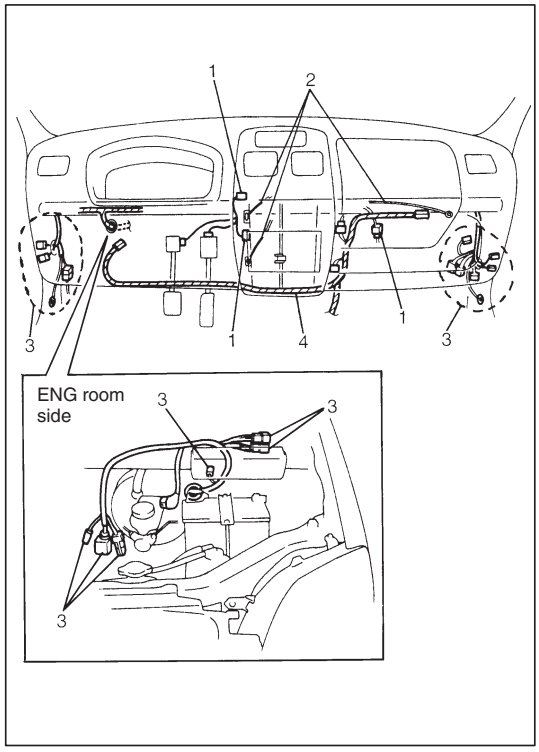

6) Disconnect harness (1) and cables (2) from heater unit and air inlet box assembly.
7) Disconnect each connector (3) and cables which need to be disconnected for removal for instrument panel.
8) Remove air bag harness (4) in instrument panel.

CAUTION:
For vehicle with Air Bag, instrument panel could not be removed with Air Bag harness coupler connected. Use are not to damage Air Bag harness.

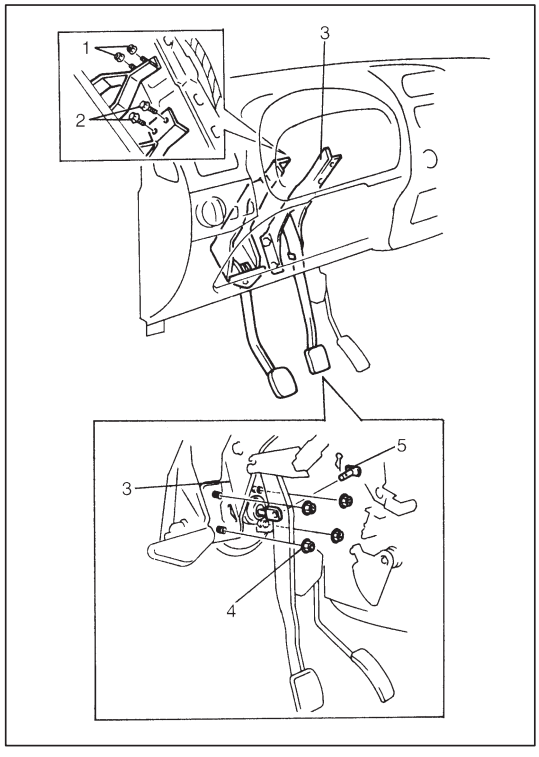

9) Loosen brake pedal bracket mounting nuts (1) and clutch pedal bracket mounting bolts (2).
10) Remove brake pedal pin (5).
11) Loosen brake pedal bracket and brake master booster mounting nuts (4).
    Refer to “BRAKE BOOSTER” in Section 5A.
12) Remove brake pedal bracket (3).

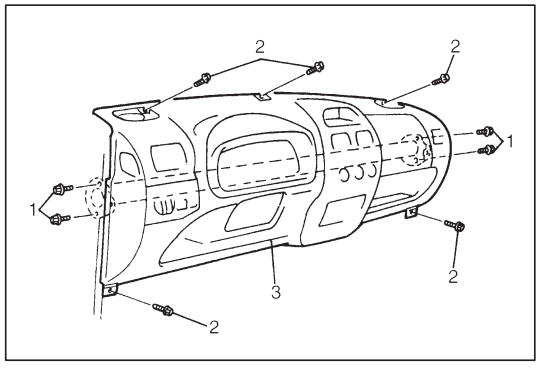

13) Remove instrument panel mounting bolts (1) and screws (2).
14) Remove instrument panel (3).

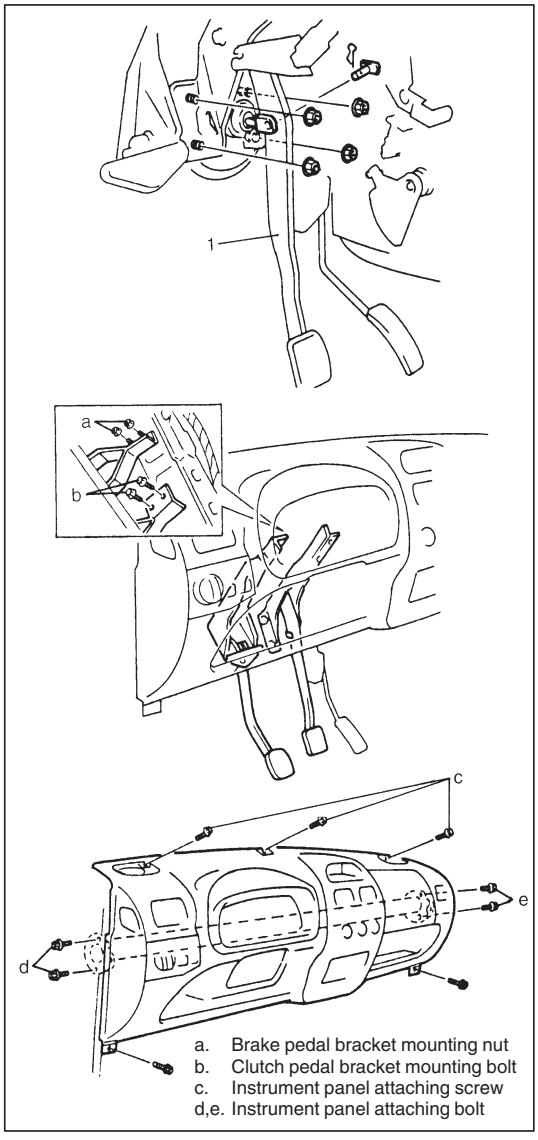

INSTALLATION

1) Install instrument panel by reversing removal procedure, noting the following items.
   - When installing each part, be careful not to catch any cable or wiring harness.
   - When installing brake pedal assembly (1), refer to Section 5A "BRAKE BOOSTER INSTALLATION".
   - Tighten each parts to specified torque and proper tightening order for instrument panel attaching.

     Tightening Order: (c) → (d) → (e)

     Tightening Torque
     (a) (b) : 13 N·m (1.3 kg-m, 9.5 lb-ft)
     (d) (e) : 23 N·m (2.3 kg-m, 16.5 lb-ft)

   - When installing steering column assembly, refer to Section 3C "STEERING COLUMN INSTALLATION".
2) Adjust control cables. (Refer to Section 1A "HEATER CONTROL CABLES".)
3) Enable air bag system if equipped. Refer to "Enabling Air Bag System" in Section 10B.

SEATS

FRONT SEAT AND REAR SEAT

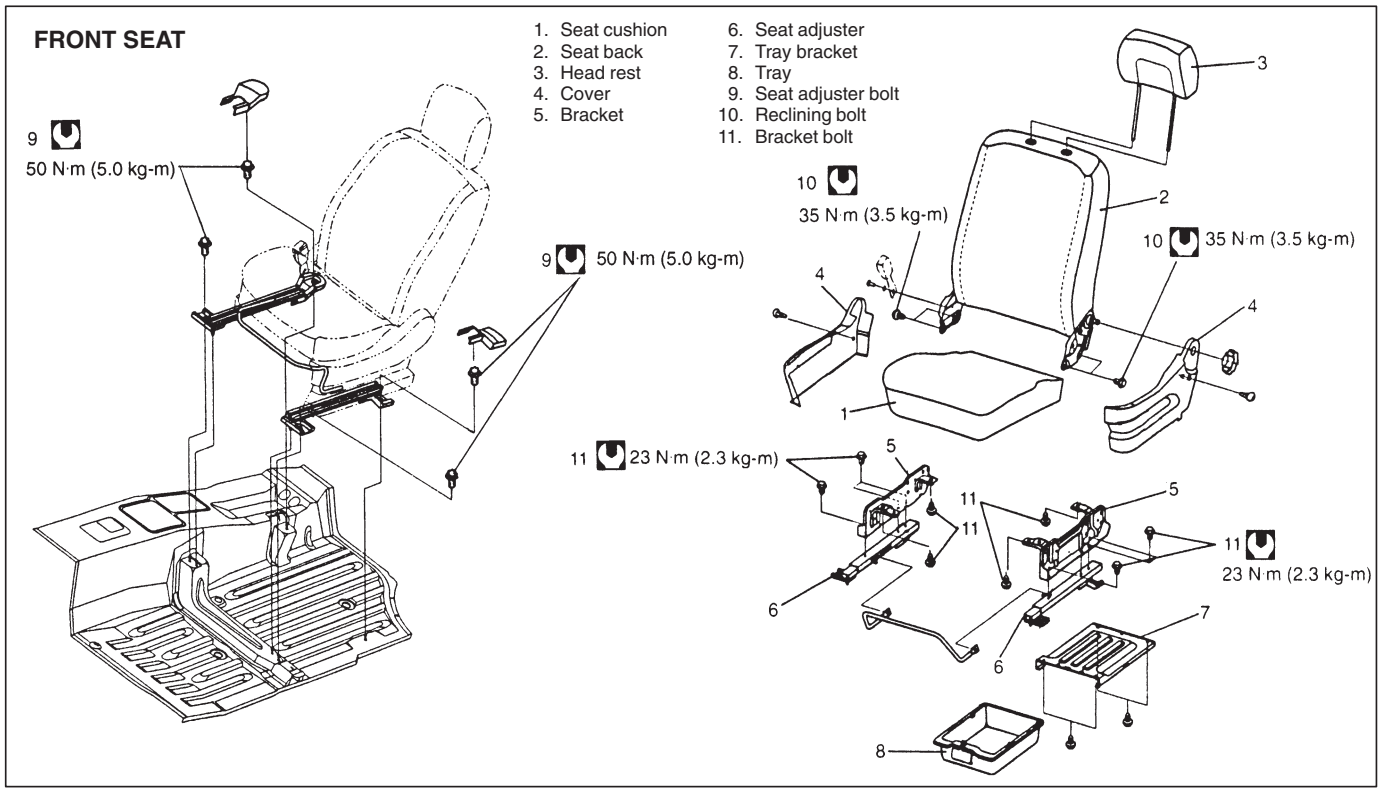

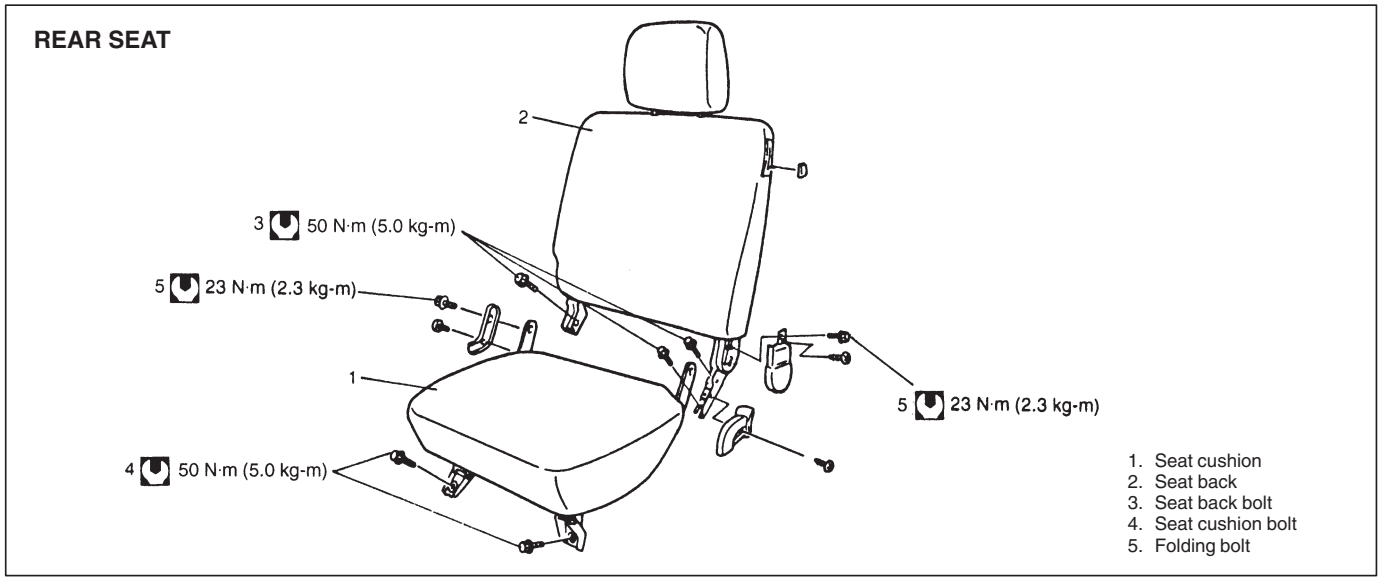

REMOVAL

1) Remove four mounting bolts to remove seat cushion.
2) Remove four mounting bolts (front seat) or five mounting bolts (rear seat) to remove seat back.
3) Disassemble and repair seat as necessary.

INSTALLATION

Reverse removal procedure to install front seat.
Torque to specifications, as shown.

SECURITY AND LOCKS

FRONT DOOR LOCK ASSEMBLY

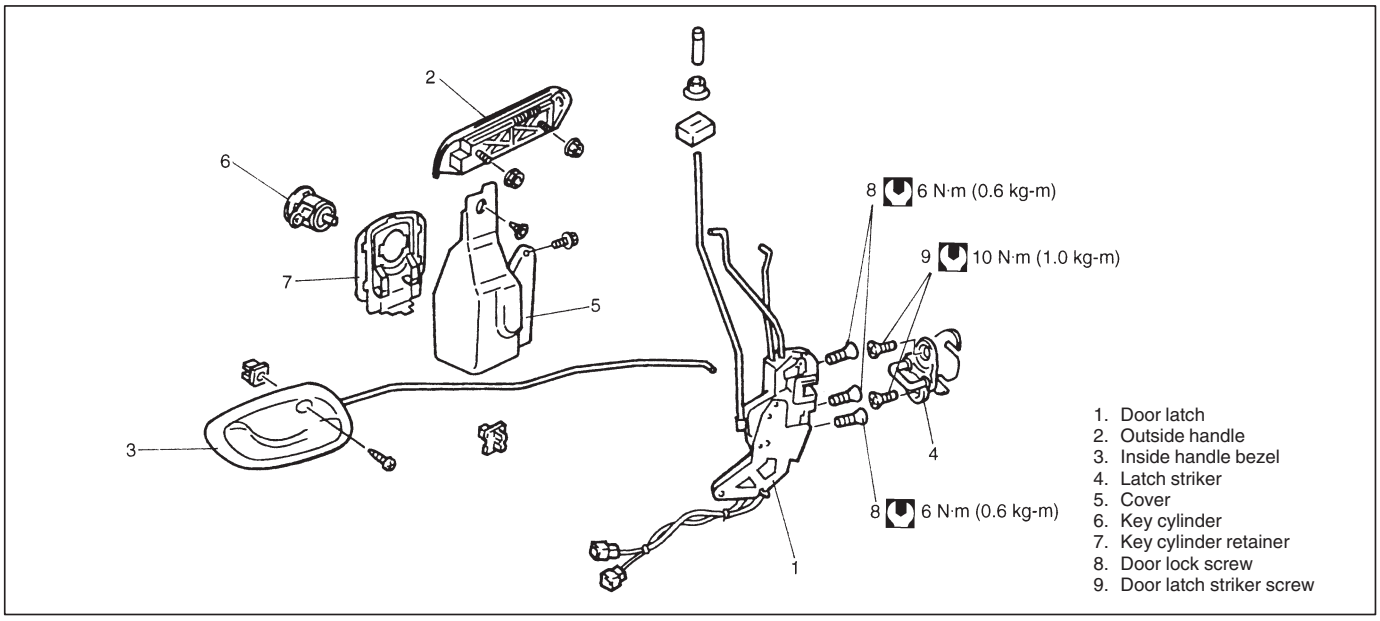

REMOVAL

1) Remove door trim and door sealing cover, refer to steps 1) to 9) of FRONT DOOR GLASS REMOVAL in this section.
2) Raise window all the way up.
3) Remove door sash.

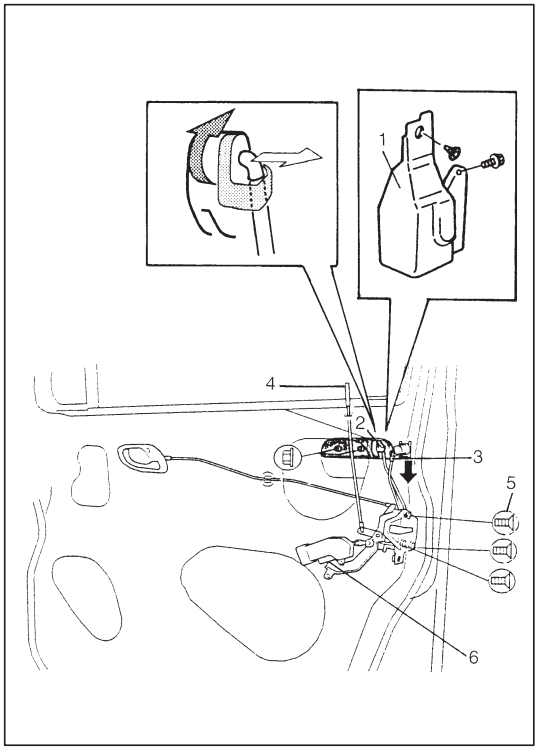

4) Remove door lock cover (1).
5) Disconnect door opening control rod (2) from outside handle.
6) Disconnect door lock control rod (3).
7) Disconnect door lock motor lead wire (if equipped).
8) Remove door lock nob (4).
9) Loosen door lock mounting screw (5) and remove door lock assembly (6).

INSTALLATION

To install front door lock, reverse removal procedure, noting the following.

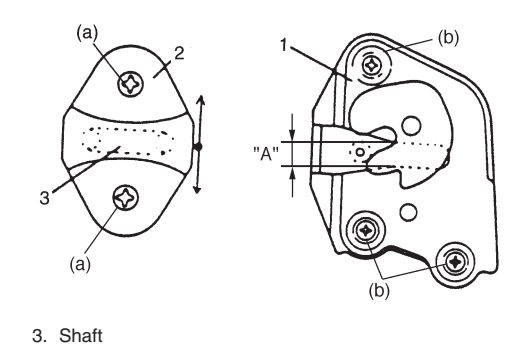

- Door latch striker.
  Move door latch striker (2) up or down so its center aligns with the center of groove “A” on the door lock assembly (1), as shown.

  NOTE:
  Striker should be moved vertically and placed level. Do not adjust door lock.

  Tightening Torque
  (a): 10 N·m (1.0 kg-m, 7.2 lb-ft)
  (b): 6 N·m (0.6 kg-m, 4.3 lb-ft)

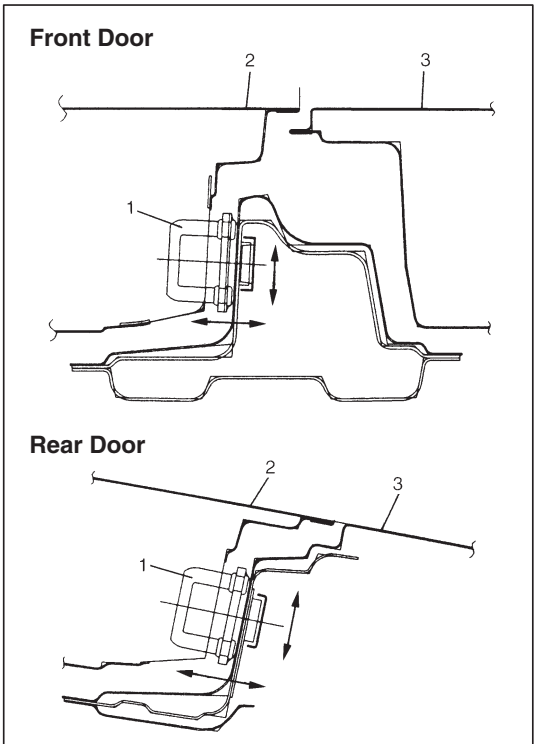

- Move door latch striker (1) sideways to adjust door outer panel surface (2) flush with rear door outer panel or body outer panel surface (3), as shown.
  In order to correctly obtain door lock operates, increase or decrease number of shims inserted between body and striker (1) to adjust it.

  NOTE:
  Apply grease to striker contacts parts periodically.

INSPECTION

Check that door open and closes smoothly and properly.
Also check that door latch half look operates properly (check that door latch half lock keeps door from opening all the way) and door latch full locks securely when closed.
Adjust door latch striker position if necessary.

REAR DOOR LOCK ASSEMBLY

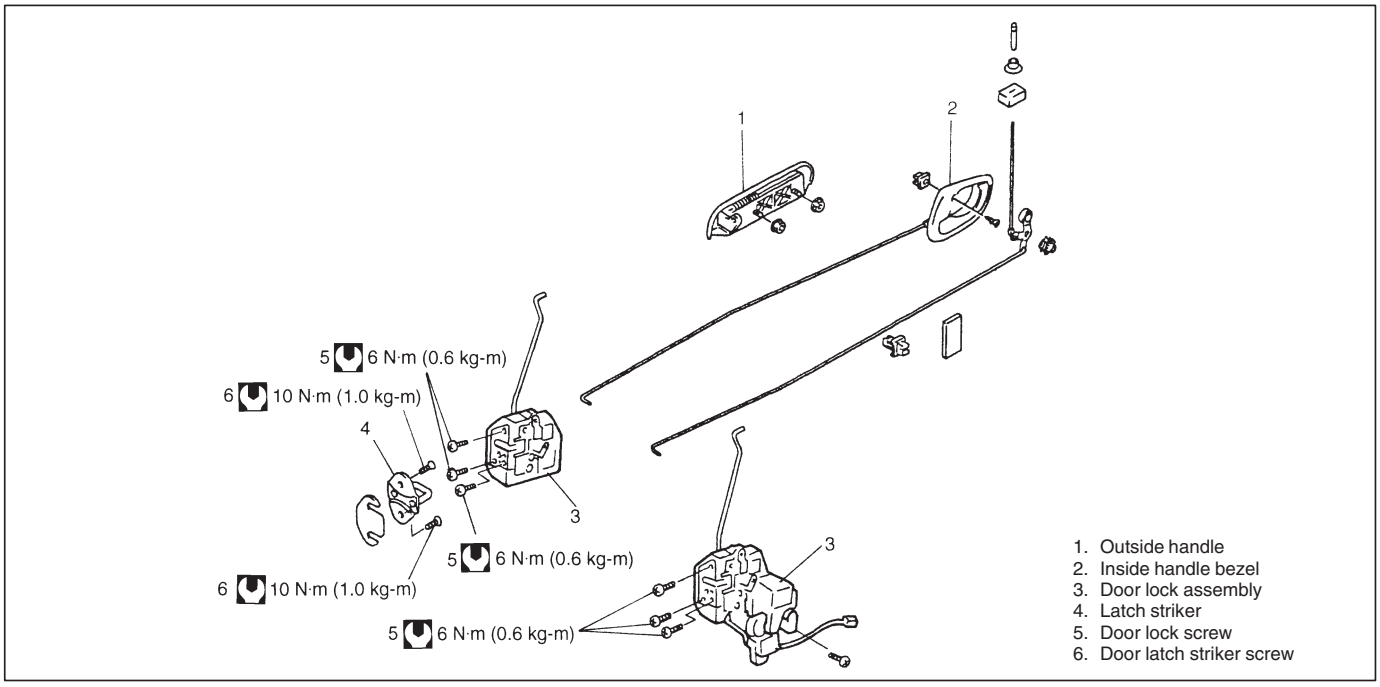

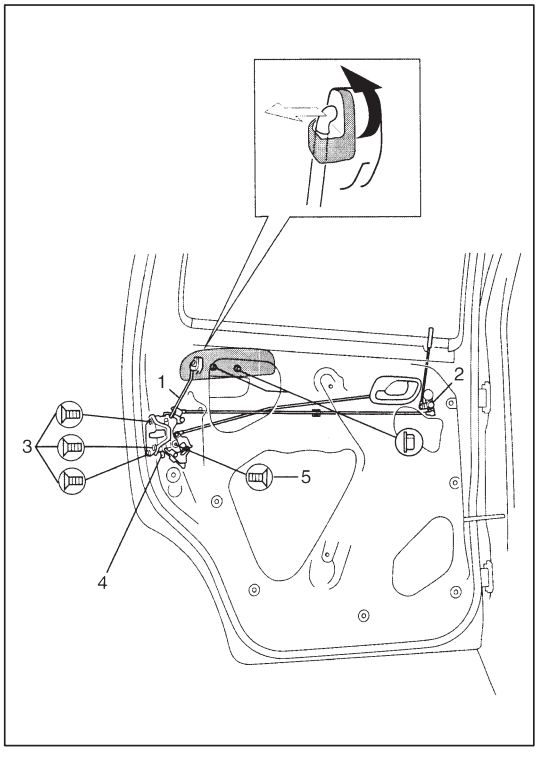

REMOVAL

1) Remove door trim and door sealing cover, refer to steps 1) to 4) of REAR DOOR GLASS REMOVAL in this section.
2) Disconnect door opening control rod (1) and door lock control rod (2).
3) Loosen door lock mounting screw (3), door lock actuator screw (5) (if equipped power door lock) and remove door lock assembly (4).

INSTALLATION

Reverse removal sequence to install rear door lock, noting points mentioned in “FRONT DOOR LOCK ASSEMBLY”.

BACK DOOR LOCK ASSEMBLY

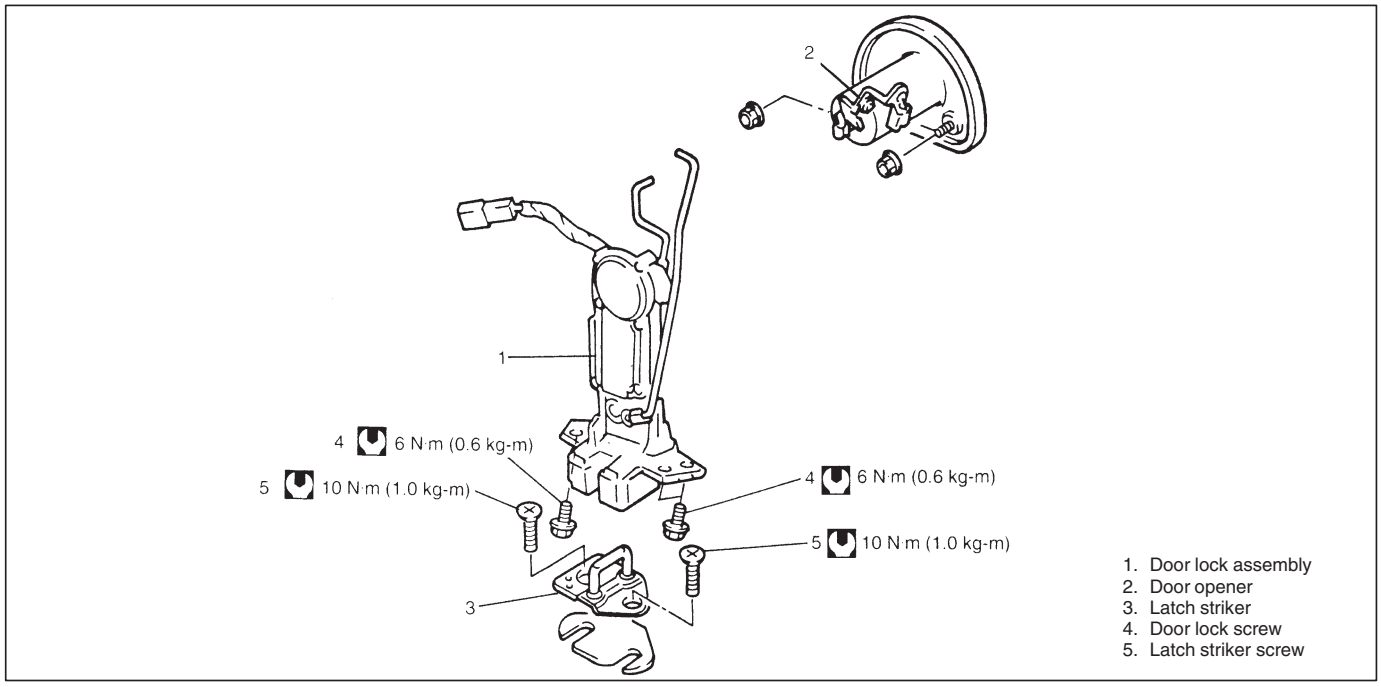

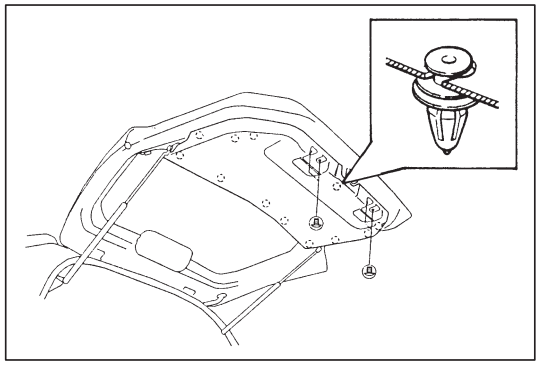

REMOVAL

1) Remove door trim.

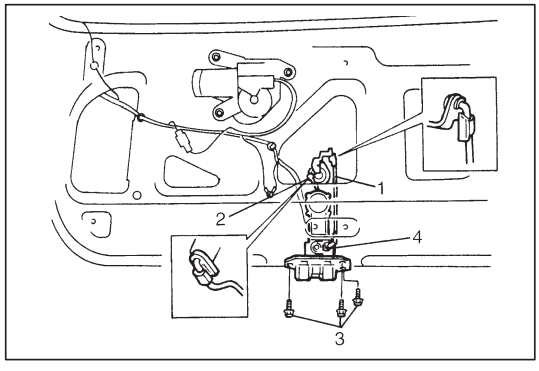

2) Disconnect door lock control rod (1).
   Disconnect control rod (2).
3) Disconnect door lock motor lead wire if equipped.
4) Loosen door lock mounting screw (3) and remove door lock assembly (4).

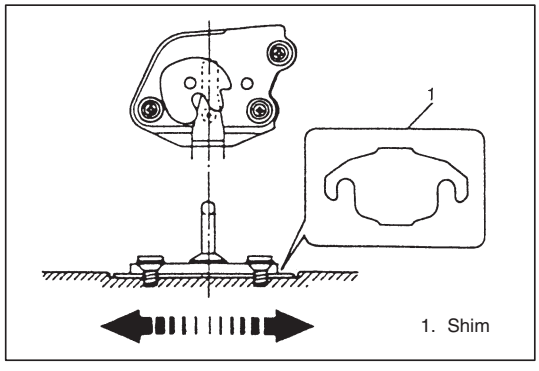

INSTALLATION

Reverse removal procedure to install back door lock assembly noting the following points.

- Door latch striker.
  Adjust door latch striker so that its center aligns with the center of groove in door latch base.
  To adjust securely door lock operates, insert proper number of shims below the bottom of striker, as shown.

INSPECTION

Check that door open and closes smoothly and properly.
Also check that door latch half lock operates properly (Check that door latch half lock keeps door from opening all the way) and door latch full locks securely closed.
Adjust door latch striker position if necessary.

KEY CODING

KEY USAGE AND IDENTIFICATION

Key is used for ignition and door lock cylinder. Keys are cut on both edges to make them reversible.
Key identification is obtained from five character key code stamped on key code tag. Using this key code, key code cutting combination can be determined from a code list (available to owners of key cutting equipment from suppliers).
If original key is available, key code cutting combination can be determined by laying key.

IGNITION SWITCH LOCK CYLINDER

Removal/Installation

See Section 3C, “STEERING WHEEL AND COLUMN”.

ELECTRICAL DIAGNOSIS

For ignition switch electrical troubleshooting, see Section 8C, “INSTRUMENTATION/DRIVER INFORMATION” in “BODY ELECTRICAL SYSTEM”.

SUNROOF

SLIDING ROOF (IF EQUIPPED)

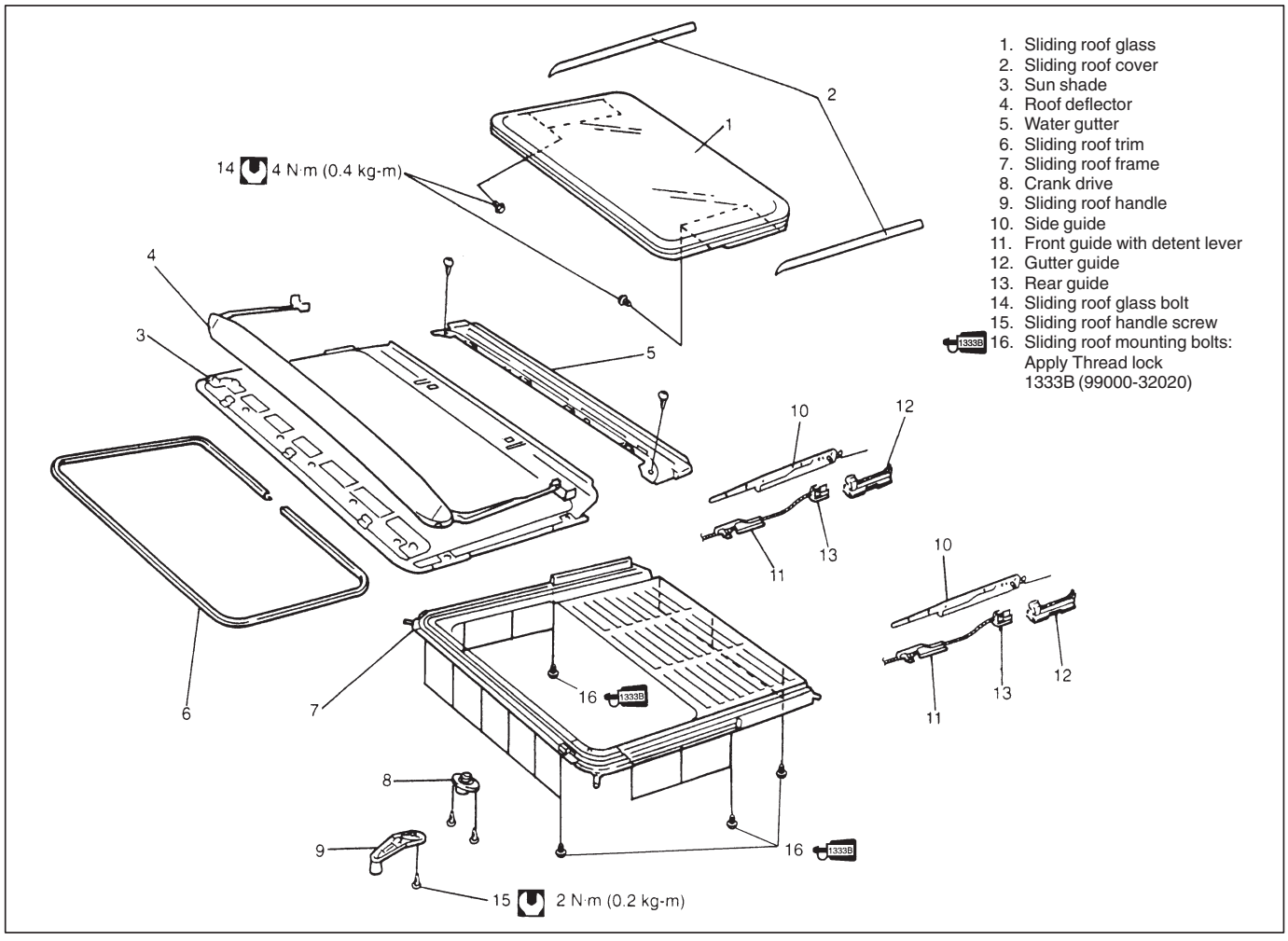

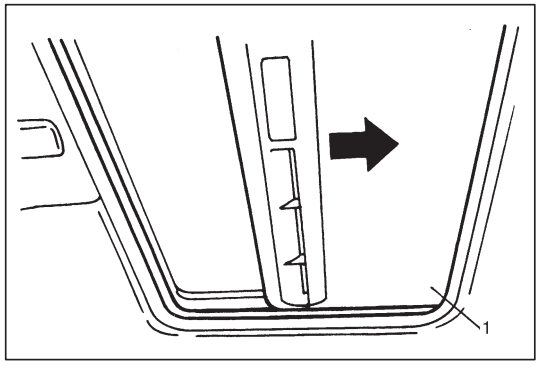

SLIDING ROOF GLASS

REMOVAL

1) Open sunshade (1) fully and tilt up sliding roof glass.

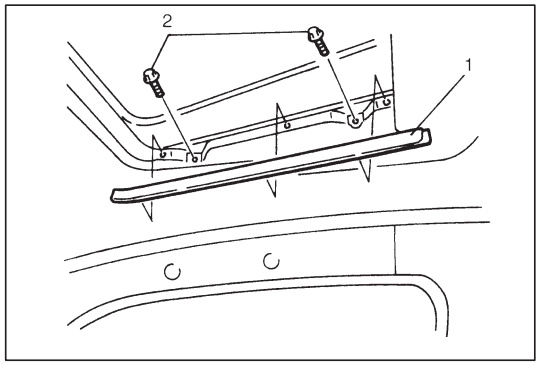

2) Remove sliding roof cover (1).
3) Loosen sliding roof bolt (2) and remove sliding roof glass.

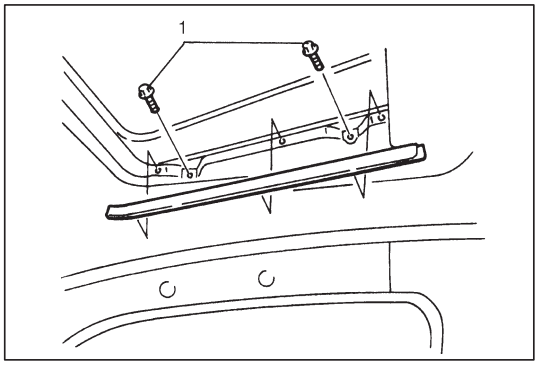

INSTALLATION

Reverse removal procedure for installation, noting the following point.

1) Tighten glass fixing bolts (1) temporarily.
2) Position sliding roof glass by closing sliding roof glass completely.
3) Tighten glass fixing bolts (1).

Tightening Torque: Sliding roof bolt 4 N·m (0.4 kg-m, 3 lb-ft)

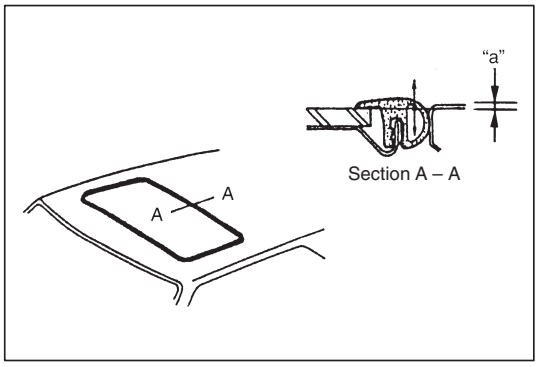

ADJUSTMENT

1) Loosen sunroof glass fixing screws (at 4 locations) and move sunroof glass up and down 2 to 3 times. In this way, sunroof glass can be positioned in both vertical and horizontal directions by elasticity of sliding roof weather strip.
2) Position sunroof glass by such dimensions with respect to roof panel surface as specified below.

Dimension: "a": 0 mm (0.0 in.)

3) After installing all parts and adjusting properly, check sunroof for proper operation (open, close and up).

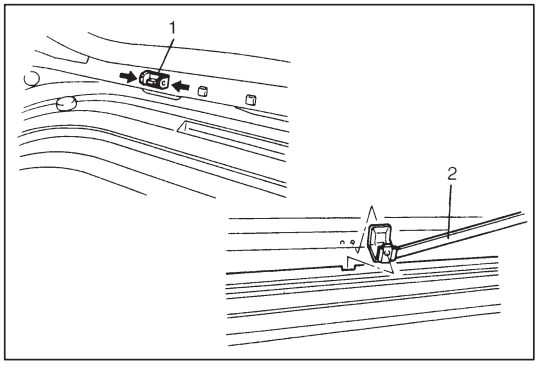

SLIDING ROOF DEFLECTOR

REMOVAL

1) Open sliding roof.
2) Release lags (1) at both bearing points with pliers.
3) Detach deflector rod (2) and then remove sliding roof deflector with rod.

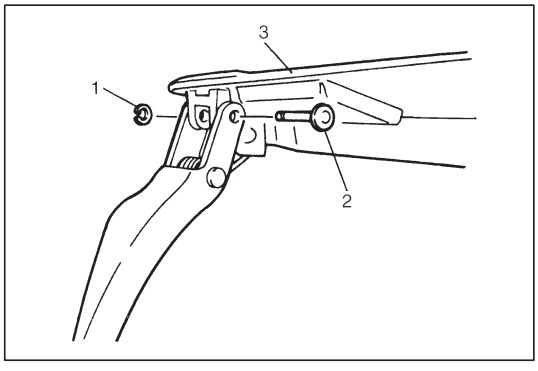

4) Remove circlip (1) and pull off connecting pin (2).
5) Remove sliding roof deflector (3).

INSTALLATION

Reverse removal procedure to install deflector.

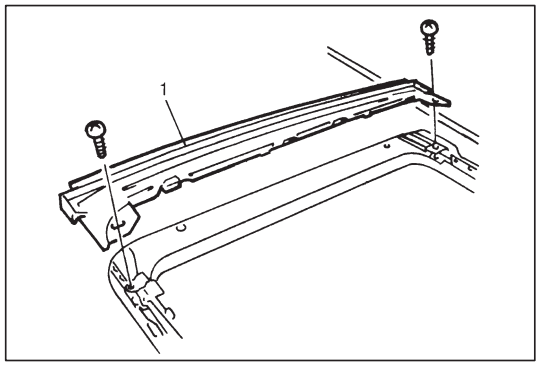

SUNSHADE

REMOVAL

1) Remove sliding roof glass. Refer to “SLIDING ROOF GLASS” in this section.
2) Remove water gutter (1) as shown.

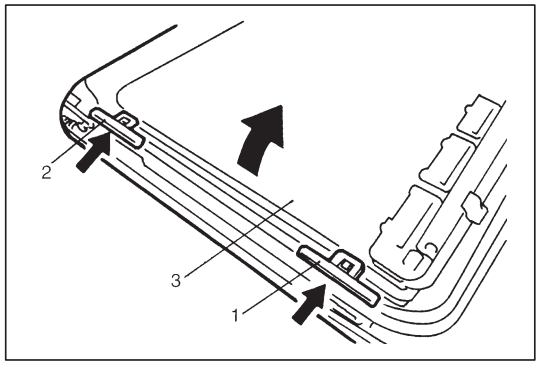

3) Close sun shade (3).
4) Detach front slider (1) and rear slider (2) by pushing arrow direction as shown.
5) Pull out sunshade (3) from sliding roof frame.

INSTALLATION

Reverse removal procedure to install sunshade.

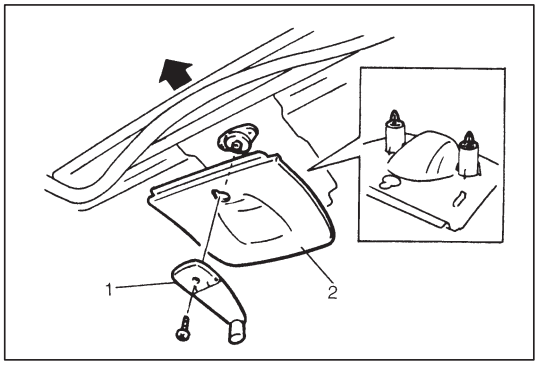

CRANK DRIVE

REMOVAL

1) Close sliding roof glass.
2) Remove sliding roof handle (1) and remove sliding roof handle garnish (2).

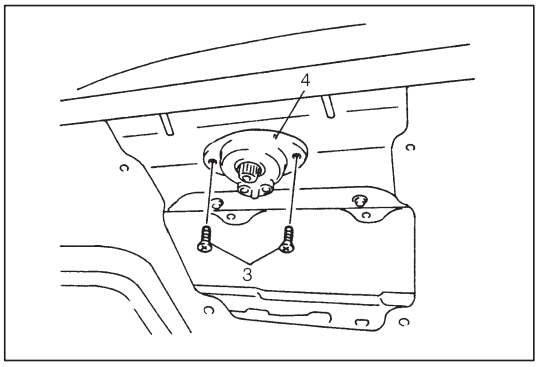

3) Loosen crank drive screws (3) and then remove crank drive (4).

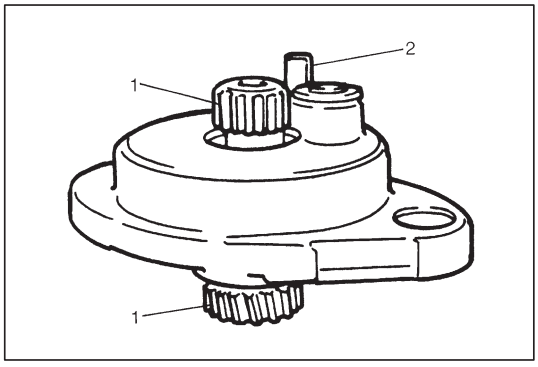

INSPECTION

- Check that the crank drive operates smoothly.
- Check crack and deformation for pinion gear (1) and drive lock pin (2).

If replace as necessary.

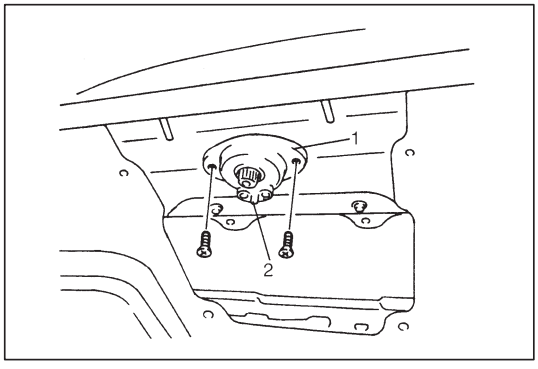

INSTALLATION

1) Adjust sliding roof assembly and crank drive for assemblying position. Refer to SLIDING ROOF ASSEMBLY in this section.
2) Reverse removal procedure for installation.
   - Install crank drive (1) with turned it lock pin (2) to forward direction as shown in figure.

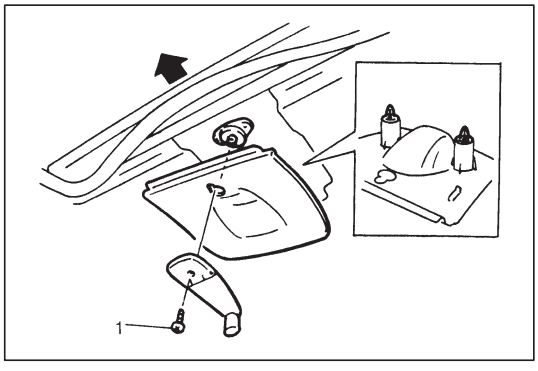

- Tighten crank drive handle screw (1) to specified torque.

  Tightening Torque: 2 N·m (0.2 kg-m, 1.4 lb-ft)

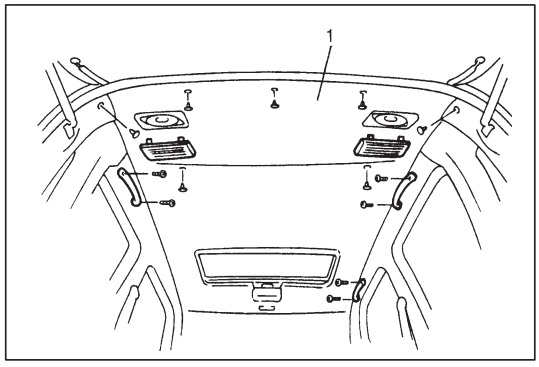

SLIDING ROOF ASSEMBLY

REMOVAL

1) Remove sliding roof glass. Refer to “SLIDING ROOF GLASS” in this section.
2) Remove head lining (1). Refer to “HEAD LINING” in this section.

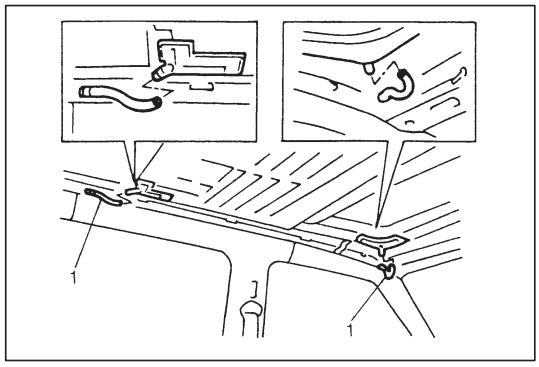

3) Disconnect drain hose (1) connected to sliding roof assembly at 4 locations.

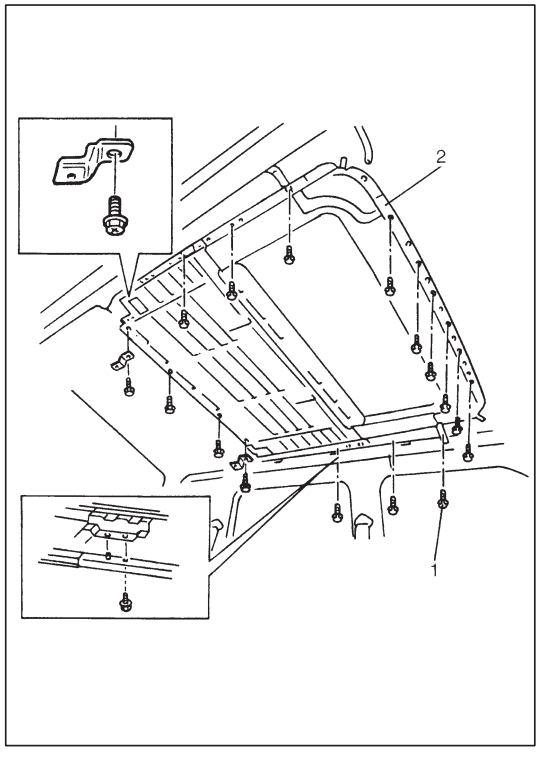

4) Loosen sliding roof mounting bolts (1) (16 pieces) and then remove sliding roof assembly (2).

DISASSEMBLY

1) Remove sunshade. Refer to “SUNSHADE” in this section.
2) Remove sliding roof deflector. Refer to “SLIDING ROOF DEFLECTOR” in this section.
3) Remove crank drive. Refer to “CRANK DRIVE” in this section.

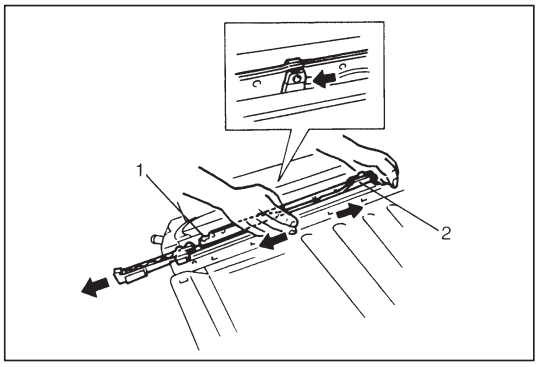

4) Pull-out side guide (1) and rear guide (2) with action cable from guide rail.

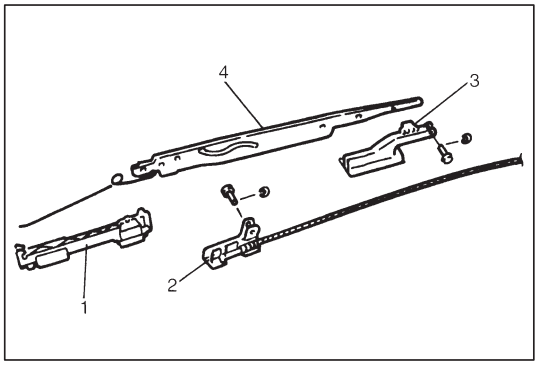

5) Detach gutter guide (1), rear guide with actuation cable (2) and front guide with detent lever (3) from side guide (4).

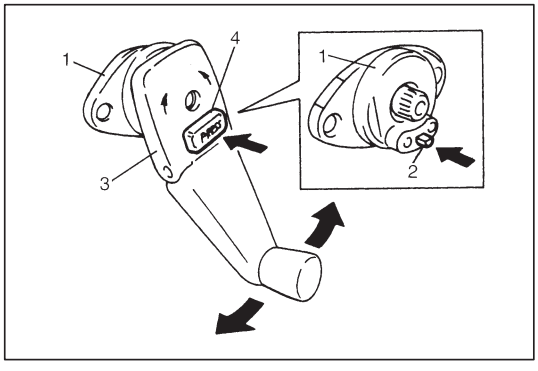

ASSEMBLY

Reverse disassembly procedure for assembly, observing the following instructions.

● Adjust crank drive position as follows.

1) Install crank handle (3) to crank drive (1) temporary.
2) Push crank (1) onto drive (2) by pushing press bottom (4).
3) Turn crank (1) clockwise to stop position.
4) Turn crank back three whole turns until lock position is reached.

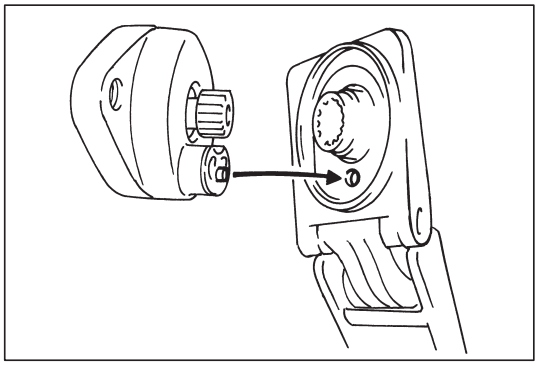

5) Crank must now fit into recess provided.
   If did not properly position, readjust crank drive position.

   NOTE:
   If crank drive is properly operates, crank drive is stopped at “Open” position after 8 turns from adjusted position and crank drive attains its end position when the button is pressed and the crank drive turned another 2 turns.

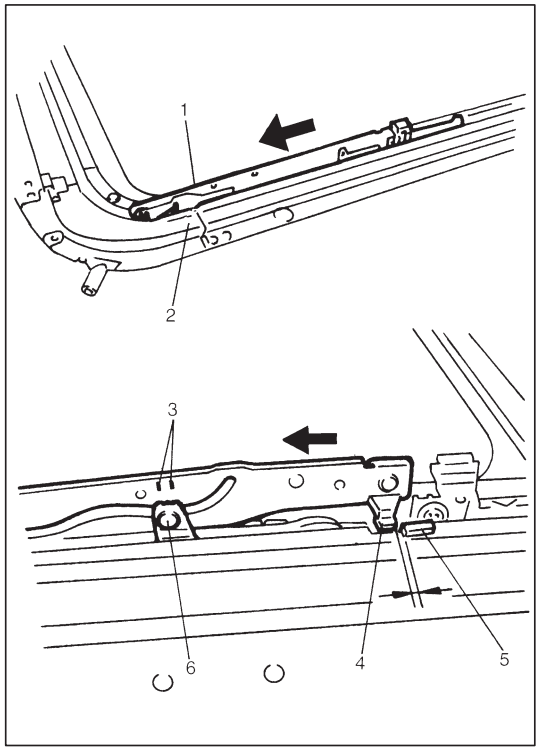

- Adjust both actuation cables as follows.

1) Push block guide assembly (1) forward until stopping (catch lever engages in front most recess (2) of guide rail).
2) Press front guide backward.
3) Push rear guide (6) connecting pins meet with adjusting notches (3) of side guide.
4) At this time, side guide bracket (4) has to lifted from rear edge (5) of guide rail recess with slight offset of 0.2 to 0.5 mm (0.008 to 0.02 in.).

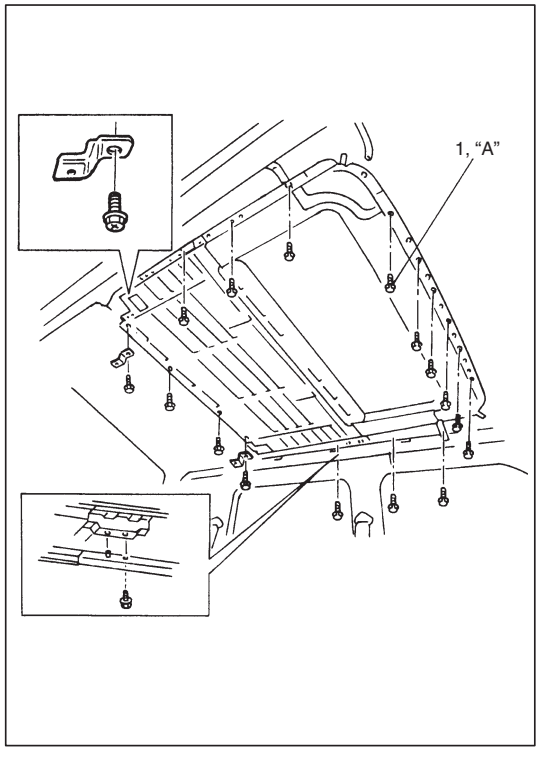

INSTALLATION

For installation, reverse removal procedure, noting the following points.

- Align both right and left positioning pins on sliding roof assembly with holes in body side for installation.
- Clean sliding roof mounting bolts (1) (16 pieces).
  Then, apply thread lock cement "A" to them.

"A": Thread lock 99000-32020

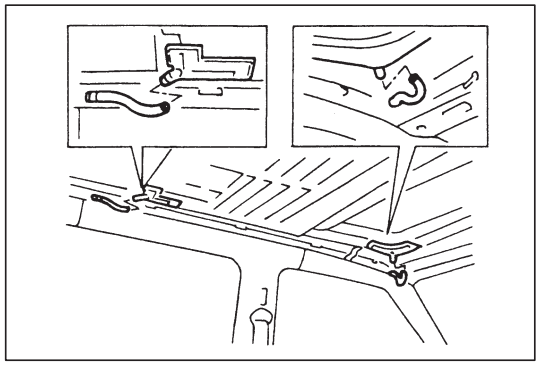

- Connect drain hoses to sliding roof assembly at 4 locations. Pass front drain hose between roof panel and inner panel and through front pillar down to outlet hole on dash side panel. Then connect drain hose to drain hose connector on dash side panel. Pass rear drain hose into on rear quarter inner panel and connect drain hose to drain hose connector on its panel.

NOTE:
After reinstalling sliding roof assembly, be sure to make glass position adjustment. (Refer to SLIDING ROOF GLASS ADJUSTMENT described previously.)

EXTERIOR AND INTERIOR TRIM

FLOOR CARPET

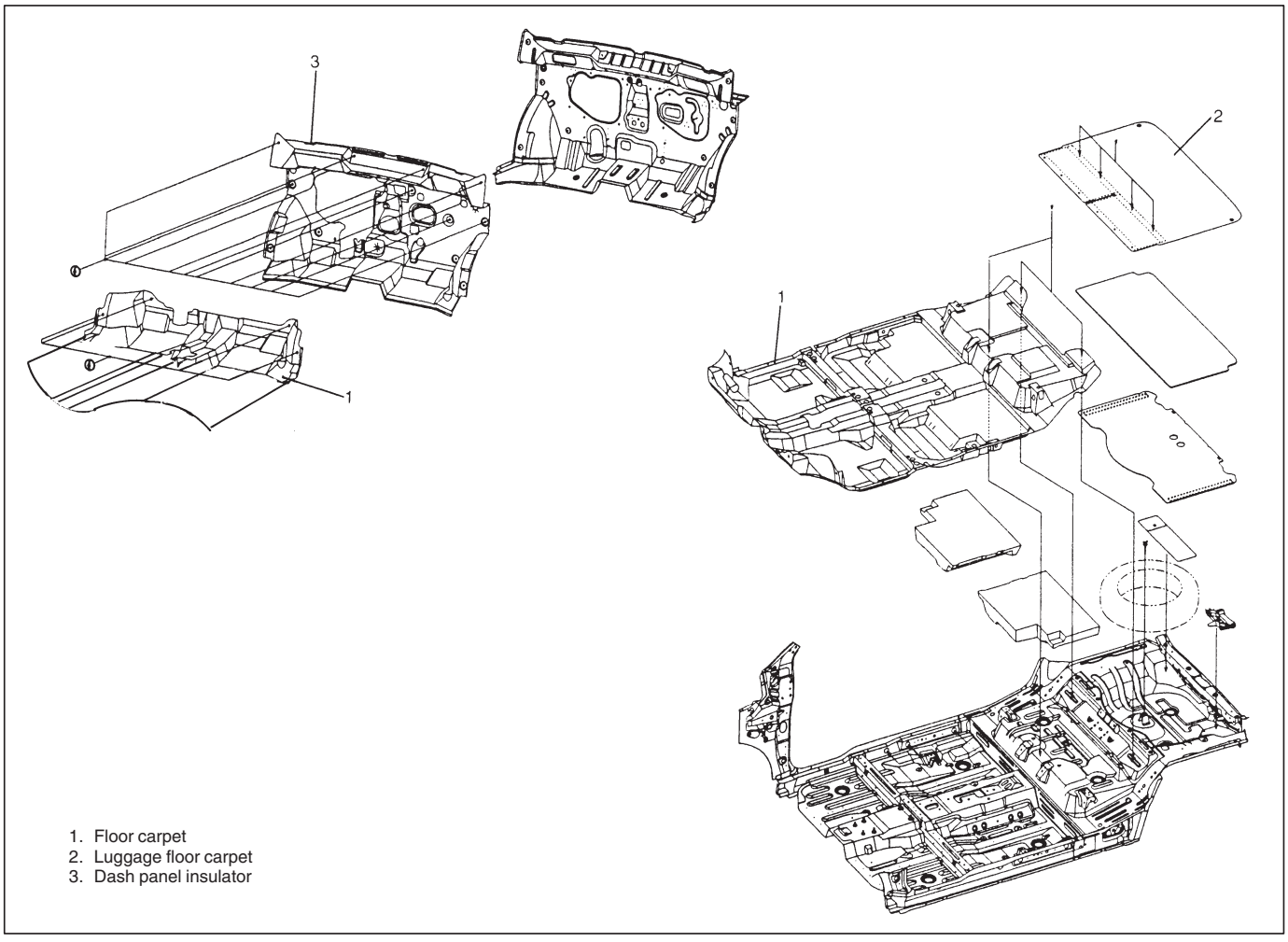

REMOVAL

1) Remove front seats and rear seat cushions.
2) Remove seat belt lower anchor bolt.
3) Remove dash side trims, front side sill scuffs, center pillar inner lower trims and rear side sill scuffs.
4) Remove parking brake lever cover, console box.
5) Remove front floor carpet.

INSTALLATION

Reverse removal sequence to install front floor carpet, noting the following point.

- When tightening seat belt anchor bolt, refer to Section 10A “FRONT SEAT BELT” for tightening torque.

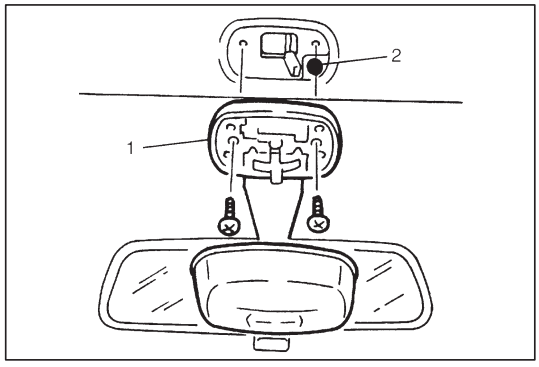

HEAD LINING

REMOVAL

1) Remove interior light (1).
2) Remove head lining clip (2).

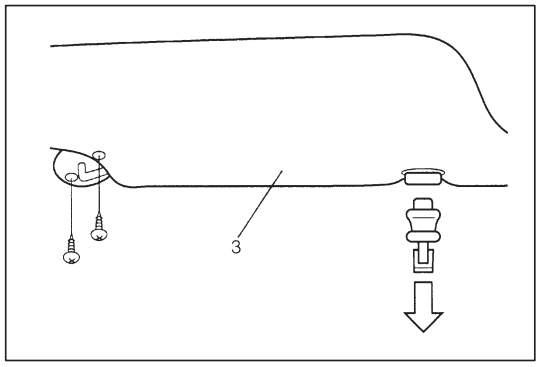

3) Remove sun visor (3).

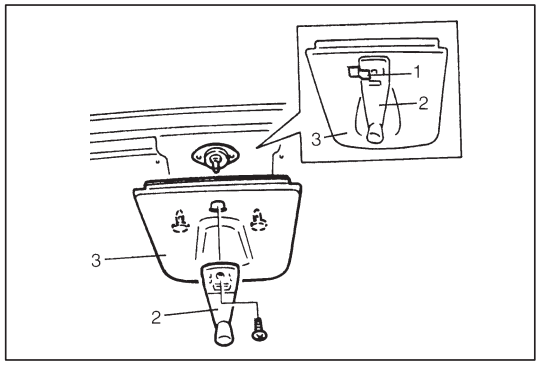

4) Mark mating marks (1) on roof handle (2) and roof garnish (3), if equipped sliding roof.
5) Remove roof handle (2) and roof garnish (3), if equipped sliding roof.

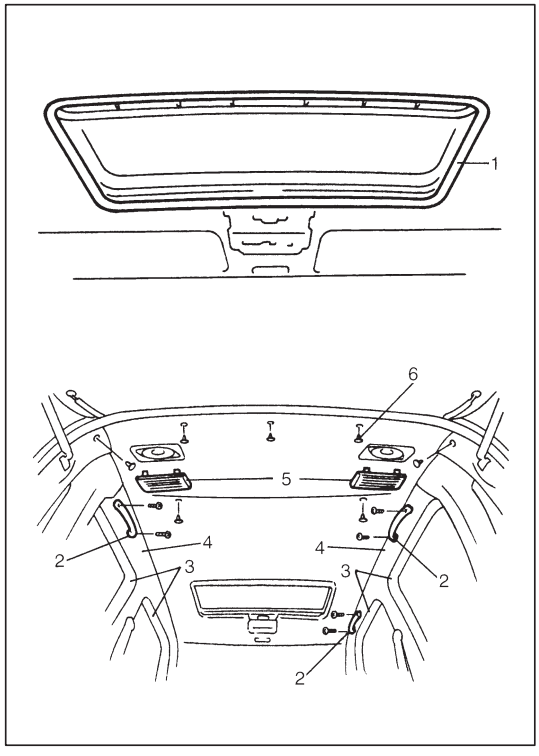

6) Remove roof trim (1), if equipped sliding roof.
7) Remove assistant grips (2).
8) Remove door opening trims (3) and remove inner trims covering headlinings (4).
9) Remove rear speaker covers (5).
10) Remove head lining clips (6) (5 pieces) and remove head lining.

NOTE:
Adhesive is used to attach head lining for vehicle without sliding roof.
Clear adhesive from headlining and roof after removing head lining if applied.

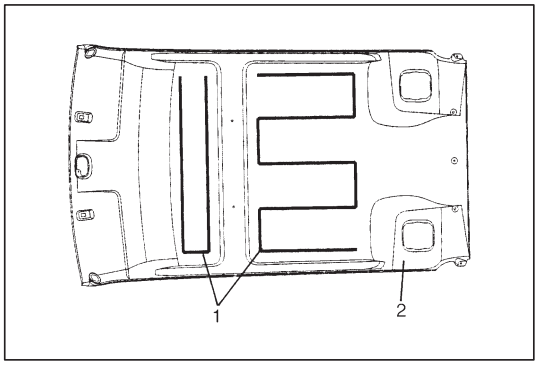

INSTALLATION

Reverse removal procedure for installation, noting the following items.

- Attach adhesive tapes (1) to head lining (2) as shown figure.

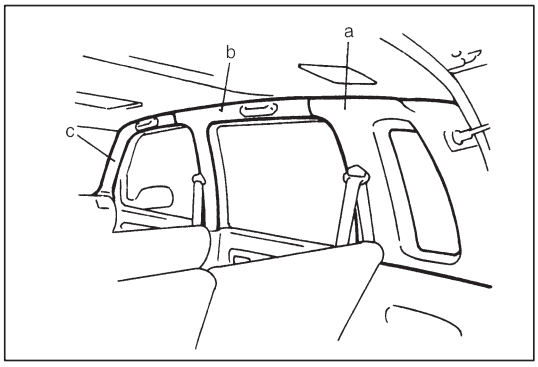

- Install interior trims in order of (a), (b), (c).

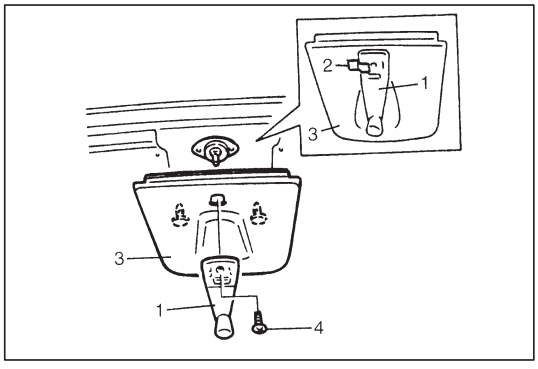

- When install roof handle (1), match marks (2) on roof handle (1) and roof garnish (3).
- Tighten roof handle screw (4) to specified torque.

  Tightening Torque: 2 N·m (0.2 kg-m, 1.4 lb-ft)

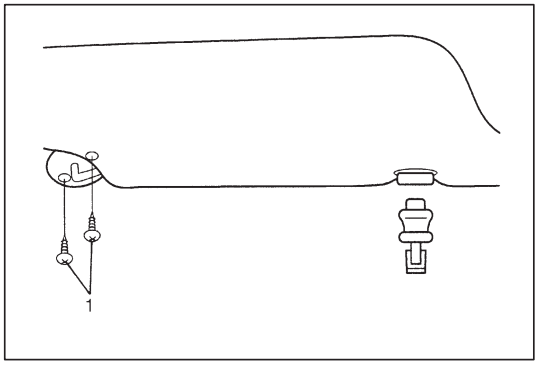

- Tighten sun visor screws (1) to specified torque.

  Tightening Torque: 4 N·m (0.4 kg-m, 2.8 lb-ft)

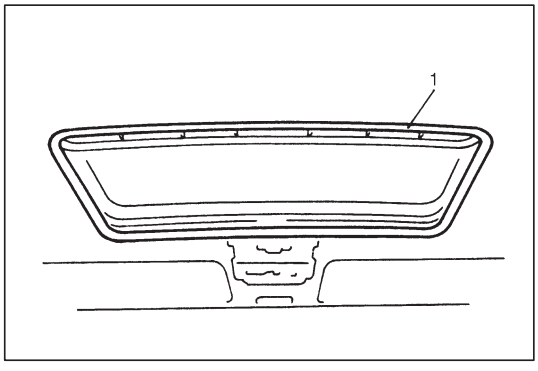

- Install sliding roof trim (1) as shown in figure.

ROOF RAIL (IF EQUIPPED)

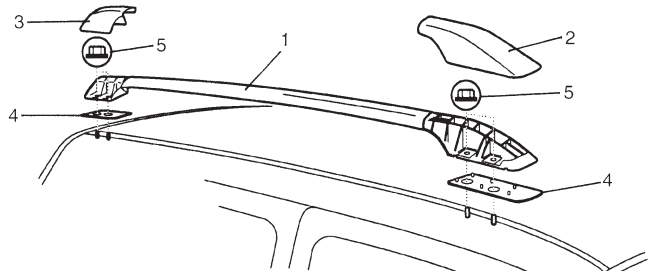

1. Roof rail assembly
2. Front cap
3. Rear cap
4. Base seals
5. Nuts

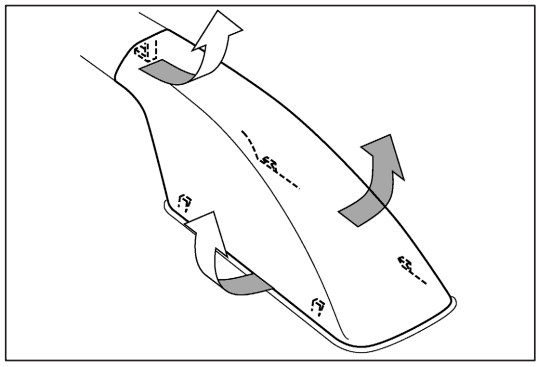

Removal

1) Remove roof rail front and rear caps as shown in figure.
2) Remove nuts.
3) Remove roof rail assembly.

Installation

Reverse removal procedure for installation.
Confirm that each roof rail fixing nut is tightened securely.

DOOR MOLDING

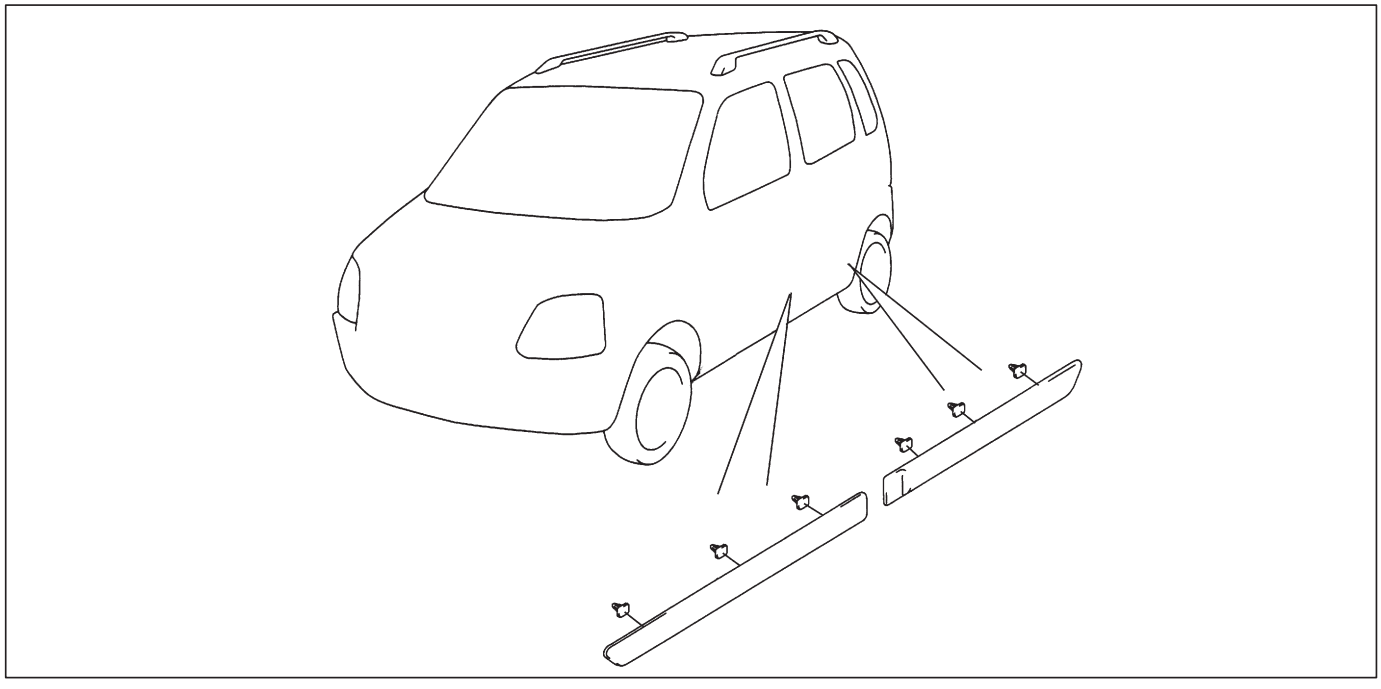

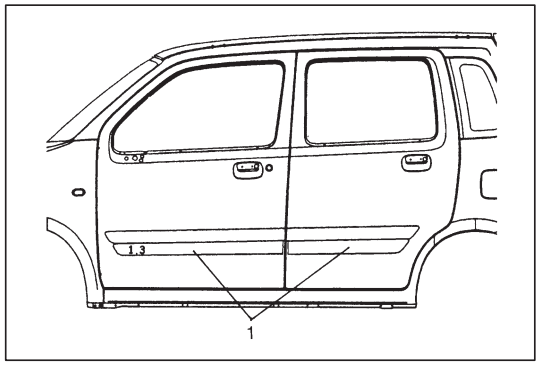

When door molding (1) is installed, be careful not to install for wrong side door panel.

BACK DOOR EMBLEM

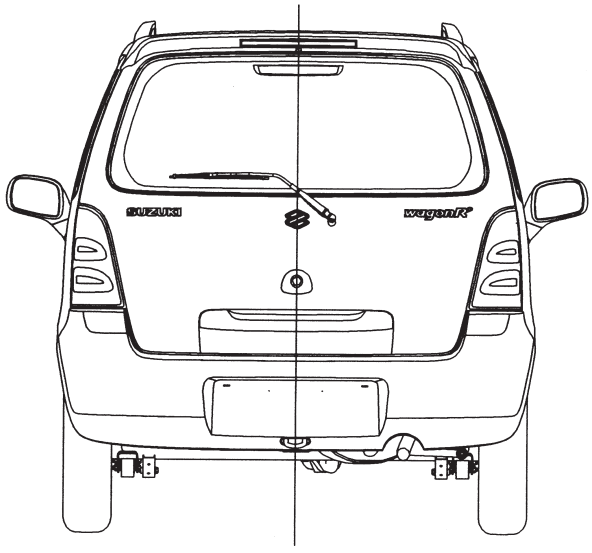

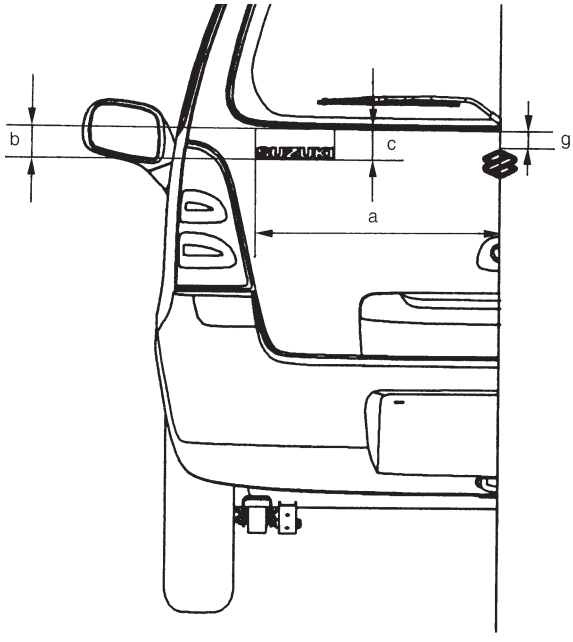

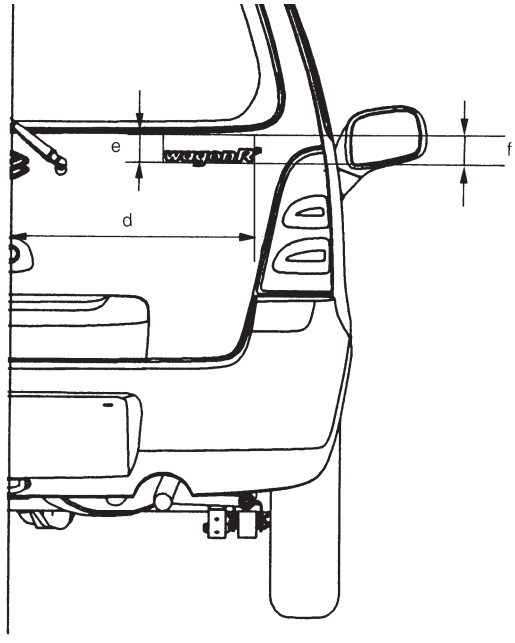

DIMENSION

Position	Dimension	
	mm	in
a	568	22.36
b	76	2.99
c	69	2.72
d	574	22.6
e	74.5	2.93
f	74	2.91
g	43	1.69

PANEL CLEARANCE

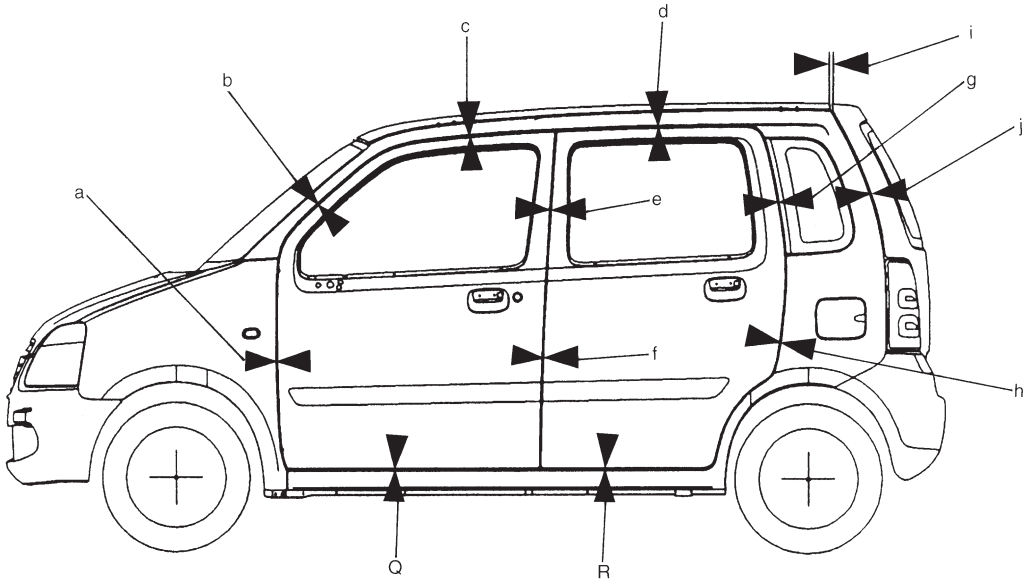

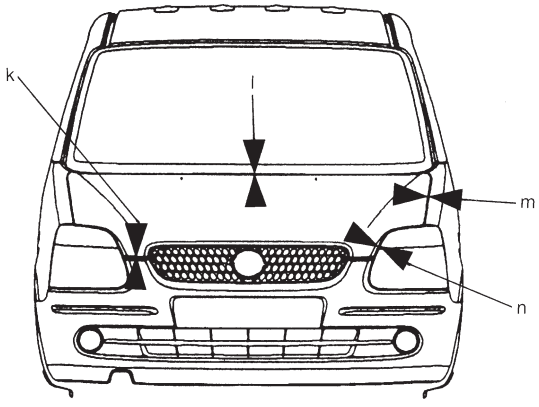

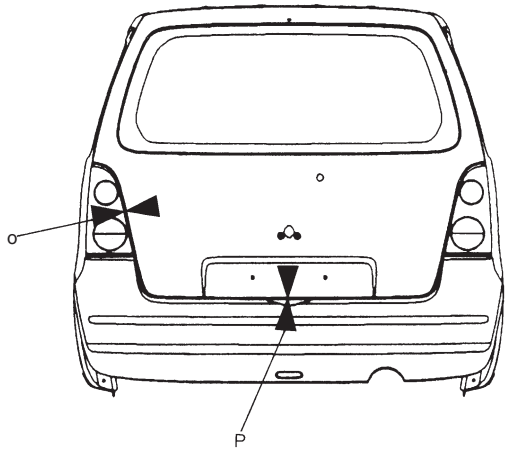

Position	Dimension		Position	Dimension	
	mm	in		mm	in
a	4 – 6	0.16 – 0.24	j	5 – 7	0.2 – 0.28
b	5 – 7	0.2 – 0.28	k	6 – 8	0.24 – 0.31
c	5 – 7	0.2 – 0.28	l	5 – 8	0.2 – 0.31
d	5 – 7	0.2 – 0.28	m	2.5 – 4.5	0.1 – 0.18
e	3.5 – 5.5	0.14 – 0.22	n	4.5 – 6.5	0.18 – 0.26
f	4 – 6	0.16 – 0.24	o	5 – 7	0.2 – 0.28
g	3.5 – 5.5	0.14 – 0.22	P	5 – 7	0.2 – 0.28
h	3.5 – 5.5	0.14 – 0.22	Q	4.5 – 6.5	0.18 – 0.26
i	8.5 – 10.5	0.33 – 041	R	4.5 – 6.5	0.18 – 0.26

REQUIRED SERVICE MATERIAL

MATERIALS	RECOMMENDED SUZUKI PRODUCTS	USE
Lithium grease	SUZUKI SUPER GREASE A (99000-25010)	● Window regulator
Grease	Carl Bechem GmbH B0401137	● Door hinge
Grease	Carl Bechem GmbH BERULUB XP 719	● Door open stopper
Thread lock cement	Thread Lock Cement Super “1333B” (99000-32020)	● Sliding roof mounting bolts

SPECIAL TOOLS

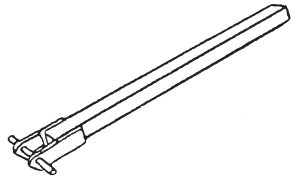		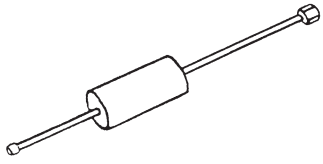
09960-48320/KM-149-A Door hinge alining lever	09960-48310/KM-295-1 Door hinge aligning bars	09960-48330/KM-298 Door hinge pin remover

SECTION 10

RESTRAINT SYSTEM

WARNING:
For vehicles equipped with Supplemental Restraint (Air Bag) System:

- **Service on and around the air bag system components or wiring must be performed only by an authorized SUZUKI dealer. Please observe all WARNINGS and "Service Precautions" under "On-Vehicle Service" in air bag system section before performing service on or around the air bag system components or wiring. Failure to follow WARNINGS could result in unintentional activation of the system or could render the system inoperative. Either of these two conditions may result in severe injury.**
- **The procedures in this section must be followed in the order listed to temporarily disable the air bag system and prevent false diagnostic codes from setting. Failure to follow procedures could result in possible air bag system activation, personal injury or otherwise unneeded air bag system repairs.**

CONTENTS

GENERAL DESCRIPTION

Either restraint system type 1 or 2 is used depending on vehicle specification.

	Front seat belt	Rear seat belt	Supplemental restraint system	
TYPE1	Seat belt with ELR	Seat belt with A-ELR	Driver air bag	Driver and front passenger seat belt pretensioner
TYPE2	Seat belt with ELR	Seat belt with A-ELR	Driver and front passenger air bag	Driver and front passenger seat belt pretensioner

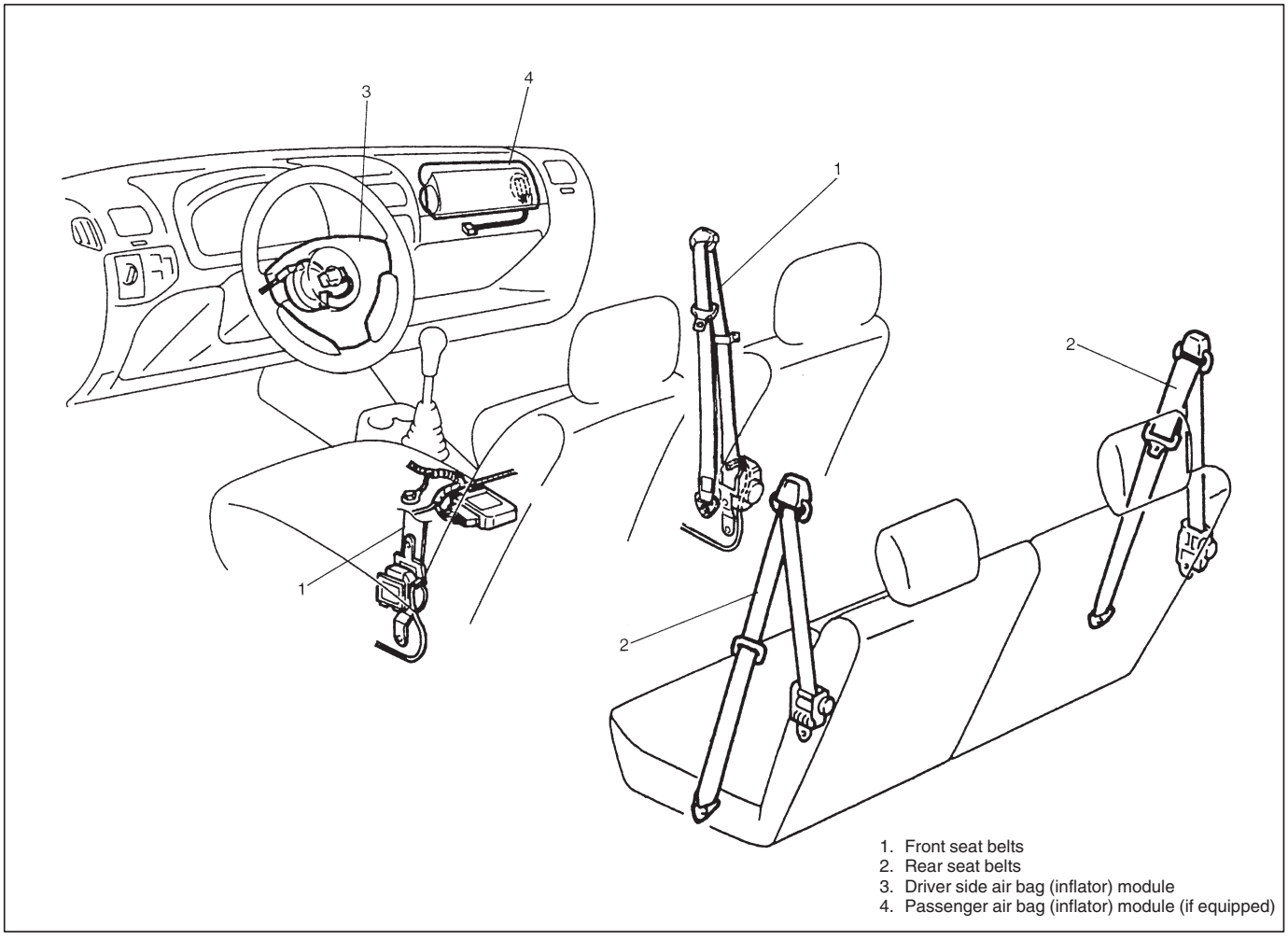

- **Seat belt with ELR**

  The seat belt with emergency locking retractor (ELR) is designed so that it locks immediately (to prevent the webbing from being pulled out of the retractor any further) when any of the following items is detected as exceeding each set value;
  - **speed at which the webbing is pulled out of the retractor,**
  - **acceleration or deceleration of the vehicle speed, and**
  - **inclination.**
- **Seat belt with A-ELR**

  The automatic and emergency locking retractor (A-ELR) works as an Emergency Locking Retractor (ELR) till its webbing is pulled all the way out and then on as an Automatic Locking Retractor (ALR) till it is retracted fully.

  ALR: Automatically locks when the webbing is pulled out from the retractor and allowed to retract even a little. Then the webbing can not be pulled out any further, unless it is wound all the way back into the retractor, which releases the lock and allows the webbing to be pulled out.
- **Seat belt with ELR and pretensioner**

  The seat belt with ELR and a pretensioner has a pretensioner mechanism which operates in linkage with the air bag in addition to the above described ELR. The pretensioner takes up the sag of the seat belt in occurrence of a front collision with an impact larger than a certain set value, thereby enhancing restraint performance.
- **Driver and front passenger side air bags and seat belt pretensioners**

  With the air bag system which includes air bags for both the driver's and passenger's sides as well as the seat belt pretensioners, the pretensioner takes up the sag of the seat belt, the driver air bag (inflator) module is deployed from the center of the steering column and the passenger air bag (inflator) module (if equipped) from the top of the instrument panel in front of the front passenger seat in occurrence of a front collision with an impact larger than a certain set value to supplement protection offered by the driver and front passenger seat belts. For more information, refer to SECTION 10B "Air Bag System".

SECTION 10A

SEAT BELT

WARNING:
For vehicles equipped with Supplemental Restraint (Air Bag) System:
- **Service on and around the air bag system components or wiring must be performed only by an authorized SUZUKI dealer. Please observe all WARNINGS and "Service Precautions" under "On-Vehicle Service" in air bag system section before performing service on or around the air bag system components or wiring. Failure to follow WARNINGS could result in unintentional activation of the system or could render the system inoperative. Either of these two conditions may result in severe injury.**
- **The procedures in this section must be followed in the order listed to temporarily disable the air bag system and prevent false diagnostic codes from setting. Failure to follow procedures could result in possible air bag system activation, personal injury or otherwise unneeded air bag system repairs.**

CAUTION:
When fasteners are removed, always reinstall them at the same location from which they were removed. If a fastener needs to be replaced, use the correct part number fastener for that application. If the correct part number fastener is not available, a fastener of equal size and strength (or stronger) may be used. Fasteners that are not reused, and those requiring thread-locking compound, will be called out. The correct torque value must be used when installing fasteners that require it. If the above procedures are not followed, parts or system damage could result.

CONTENTS

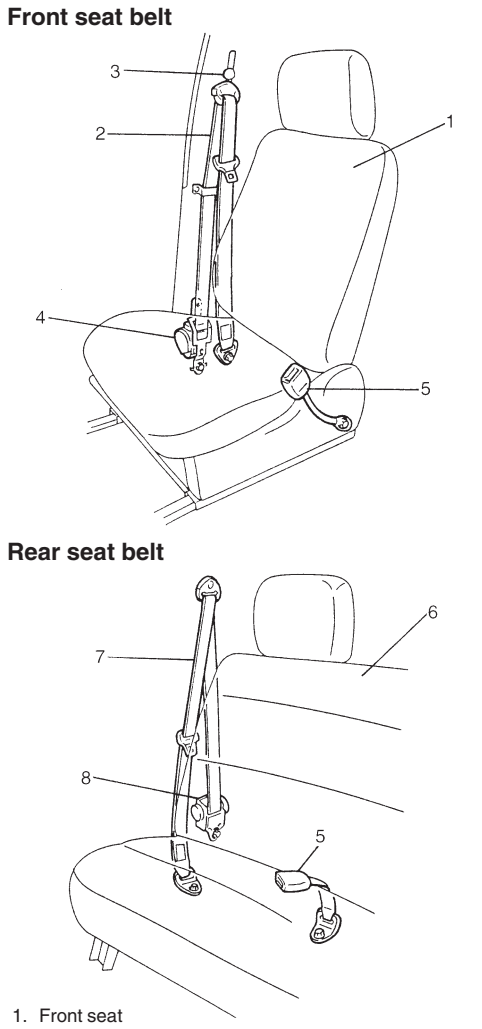

1. Front seat
2. Front seat belt
3. Shoulder adjuster
4. Retractor assembly (with pretensioner)
5. Buckle
6. Rear seat
7. Rear seat belt
8. Retractor assembly

GENERAL DESCRIPTION

SEAT BELT

Refer to SECTION 10.

SEAT BELT PRETENSIONER

Seat belts of the driver and front passenger seats are provided with a pretensioner as an optional function unit. The pretensioner is incorporated in retractor assembly and controlled by SDM as one of air bag system components. It will be activated at the same time as the air bag when an impact at the front of vehicle exceeds the specified value.
When servicing seat belt (retractor assembly) with pretensioner, be sure to observe all WARNINGS and CAUTIONS in this section and "Service Precautions" under "On-Vehicle Service" in SECTION 10B.

CAUTION:
Do not reuse the seat belt pretensioner (retractor assembly) that has operated but replace it with a new one as an assembly. To confirm whether pretensioner is operated or not, refer to "Service Precautions" under "On-Vehicle Service" in SECTION 10B.

DIAGNOSIS

For diagnosis of the seat belt pretensioner, refer to SECTION 10B.

INSPECTION AND REPAIR REQUIRED AFTER ACCIDENT

After an accident, whether the seat belt pretensioner has been activated or not, be sure to perform checks, inspections and repairs described on "Repairs and Inspections Required after Accident" under "Diagnosis" in SECTION 10B.

ON-VEHICLE SERVICE

SERVICE PRECAUTIONS

SERVICE AND DIAGNOSIS

WARNING:
If replacing seat belt is necessary, replace buckle and ELR (or webbing) together as a set. This is for the reason of ensuring locking of tongue plate with buckle.
If these parts are replaced individually, such a locking condition may become unreliable. For this reason, SUZUKI will supply only the spare buckle and ELR (or webbing) in a set part.

Before servicing or replacing seat belts, read the following precautionary items and observe them.
- Seat belts should be normal relative to strap retractor and buckle portions.
- Keep sharp edges and damaging objects away from belts.
- Avoid bending or damaging any portion of belt buckle or latch plate.
- Do not bleach or dye belt webbing. (Use only mild soap and lukewarm water to clean it.)
- When installing a seat belt anchor bolt hand-tighten first to prevent cross-threading.
- Do not attempt any repairs on retractor mechanisms or retractor covers. Replace defective assemblies with new replacement parts.
- Keep belts dry and clean at all times.
- If there exist any parts in question, replace such parts.
- Replace belts whose webbing is cut or otherwise damaged.
- Do not put anything into trim panel opening which seat belt webbing passes through.

For seat belt with pretensioner
Refer to “Service and Diagnosis” of “Service Precautions” under “On-Vehicle Service” in SECTION 10B in addition to above precaution.

WARNING:
When performing service on or around air bag system components or air bag system wiring, disable the air bag system. Refer to “Disabling Air Bag System” later in this section.
Failure to follow procedures could result in possible air bag activation, personal injury or unneeded air bag system repairs.

DISABLING AIR BAG SYSTEM
Refer to “Disabling Air Bag System” of “Service Precautions” under “On-Vehicle Service” in SECTION 10B.

ENABLING AIR BAG SYSTEM
Refer to “Enabling Air Bag System” of “Service Precautions” under “On-Vehicle Service” in SECTION 10B.

HANDLING AND STORAGE
Refer to “Handling and Storage” of “Service Precautions” under “On-Vehicle Service” in SECTION 10B.

DISPOSAL
Refer to “Disposal” of “Service Precautions” under “On-Vehicle Service” in SECTION 10B.

FRONT SEAT BELT WITH PRETENSIONER

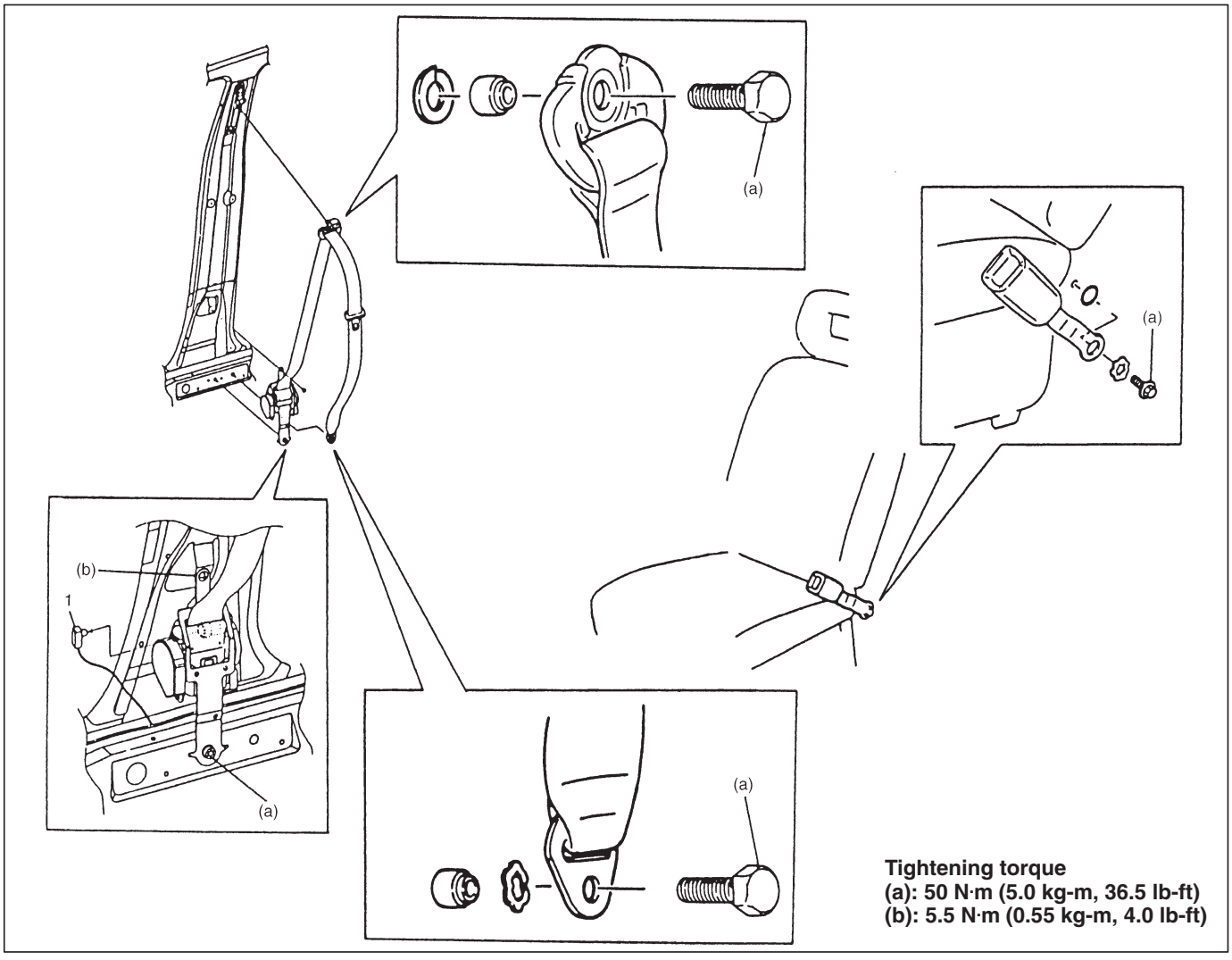

WARNING:

- **Never attempt to disassemble or repair the seat belt pretensioner (retractor assembly). If any abnormality is found, be sure to replace it with new one as an assembly.**
- **Be sure to read "Service Precautions" earlier in this section, before starting to work and observe every precaution during work. Neglecting them may result in personal injury or unactivation of the seat belt pretensioner when necessary.**

REMOVAL

1) Disconnect negative battery cable from battery.
2) Disable air bag system. Refer to "Disabling Air Bag System" of "Service Precautions" under "On-Vehicle Service" in SECTION 10B.
3) Disconnect Yellow connector (1) from seat belt pretensioner.
4) Remove front seat belts from vehicle referring to above figure.

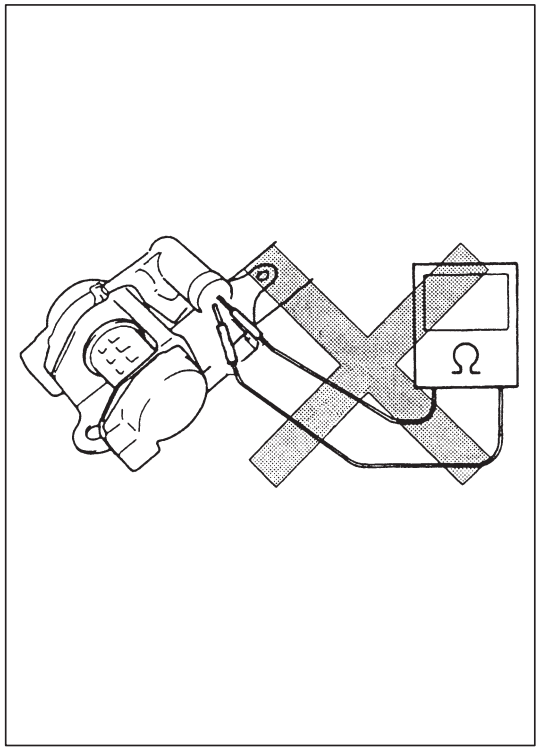

INSPECTION

WARNING:
Never measure resistance of pretensioner or disassemble it. Otherwise, personal injury may result.

CAUTION:
If seat belt pretensioner (retractor assembly) was dropped from a height of 30 cm (1 ft) or more, it should be replaced.

Seat belts and attaching parts can affect the vital components and systems of a vehicle.
Therefore, they should be inspected carefully and replaced with genuine parts only.

- Seat belt
  Its webbing or strap should be free from damage.
- Retractor assembly
  It should lock webbing when pulled quickly.
  The front seat belt retractor assembly should pass the above inspection and should lock webbing even when tilted (approx. 15°) toward the fore and aft or right and left directions.
- Anchor bolt
  Anchor bolts should be torqued to specification.
- Belt latch
  It should be secure when latched.

Check retractor assembly with seat belt pretensioner appearance visually for the following symptoms and if any one of them is applicable, replace it with a new one as an assembly.

- Pretensioner has activated.
- There is a crack in seat belt pretensioner (retractor assembly).
- Wire harness or connector is damaged.
- Seat belt pretensioner (retractor assembly) is damaged or a strong impact (e.g., dropping) was applied to it.

INSTALLATION

Install seat belts in reverse order of removal, noting the following.

- Tighten bolts to specified torque.
- Connect Yellow connector for seat belt pretensioner securely.
- Connect negative battery cable to battery.
- Enable air bag system. Refer to “Enabling Air Bag System” under “Service Precautions” in SECTION 10B.

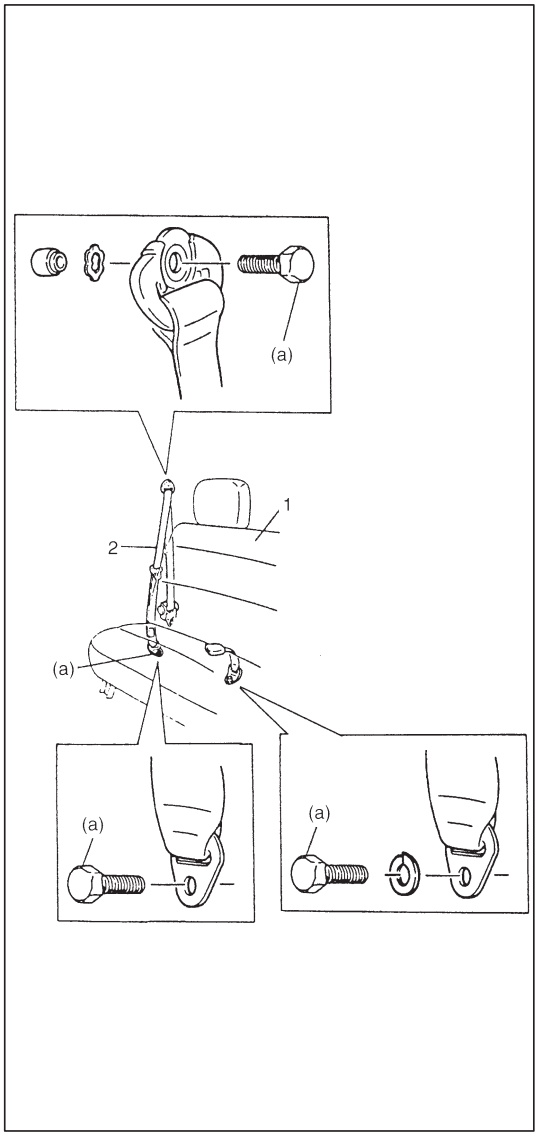

REAR SEAT BELT

WARNING:
Be sure to read "Service Precautions" earlier in this section before starting to work and observe every precaution during work.

REMOVAL

1) Remove rear seat (1) referring to "BODY SERVICE" section.
2) Refer to the left figure to remove rear seat belt (2).

INSPECTION

Check rear seat belt for the same items as front seat belt inspection other than related to pretensioner.

INSTALLATION

Install the rear seat belt observing the following precautions.

- Seat belt anchor bolts should have an unified fine thread (7/16 – 20 UNF). Under no circumstances should any different sized or metric screw threads be used.
- Be sure to tighten seat belt anchor bolts to specified torque.

Tightening Torque
(a): 50 N·m (5.0 kg-m, 36.5 lb-ft)

SECTION 10B

AIR BAG SYSTEM

WARNING:
For vehicles equipped with Supplemental Restraint (Air Bag) System:
- **Service on and around the air bag system components or wiring must be performed only by an authorized SUZUKI dealer. Please observe all WARNINGS and "Service Precautions" under "On-Vehicle Service" in air bag system section before performing service on or around the air bag system components or wiring. Failure to follow WARNINGS could result in unintentional activation of the system or could render the system inoperative. Either of these two conditions may result in severe injury.**
- **The procedures in this section must be followed in the order listed to temporarily disable the air bag system and prevent false diagnostic codes from setting. Failure to follow procedures could result in possible air bag system activation, personal injury or otherwise unneeded air bag system repairs.**

CAUTION:
When fasteners are removed, always reinstall them at the same location from which they were removed. If a fastener needs to be replaced, use the correct part number fastener for that application. If the correct part number fastener is not available, a fastener of equal size and strength (or stronger) may be used. Fasteners that are not reused, and those requiring thread-locking compound, will be called out. The correct torque value must be used when installing fasteners that require it. If the above conditions are not followed, parts or system damage could result.

CONTENTS

GENERAL DESCRIPTION

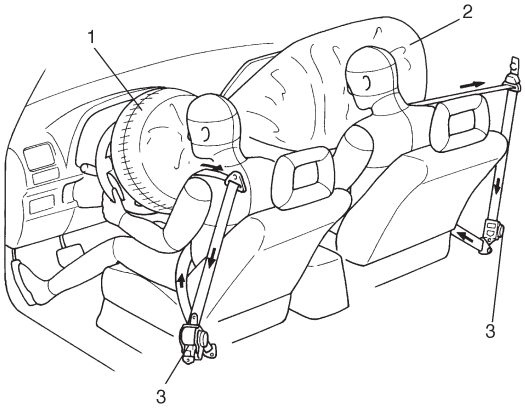

1. Driver side air bag
2. Passenger side air bag (if equipped)
3. Seat belt pretensioners

With the air bag system which includes air bags for both the driver's and passenger's (if equipped) sides as well as the seat belt pretensioners, the sag of the seat belt is taken up, the driver air bag (inflator) module is deployed from the center of the steering column and the passenger air bag (inflator) module from the top of the instrument panel in front of the front passenger seat in occurrence of a front collision with an impact larger than a certain set value to supplement protection offered by the driver and front passenger seat belts.

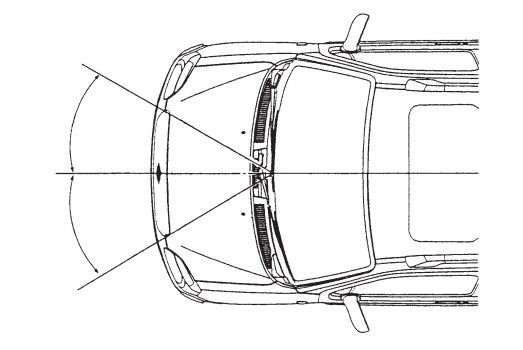

The air bag system is designed to activate only in severe frontal collisions. It is not designed to activate in rear impacts, side impacts, rollovers, or minor frontal collisions, since it would offer no protection in those types of accidents.

SYSTEM COMPONENTS AND WIRING LOCATION VIEW AND CONNECTORS

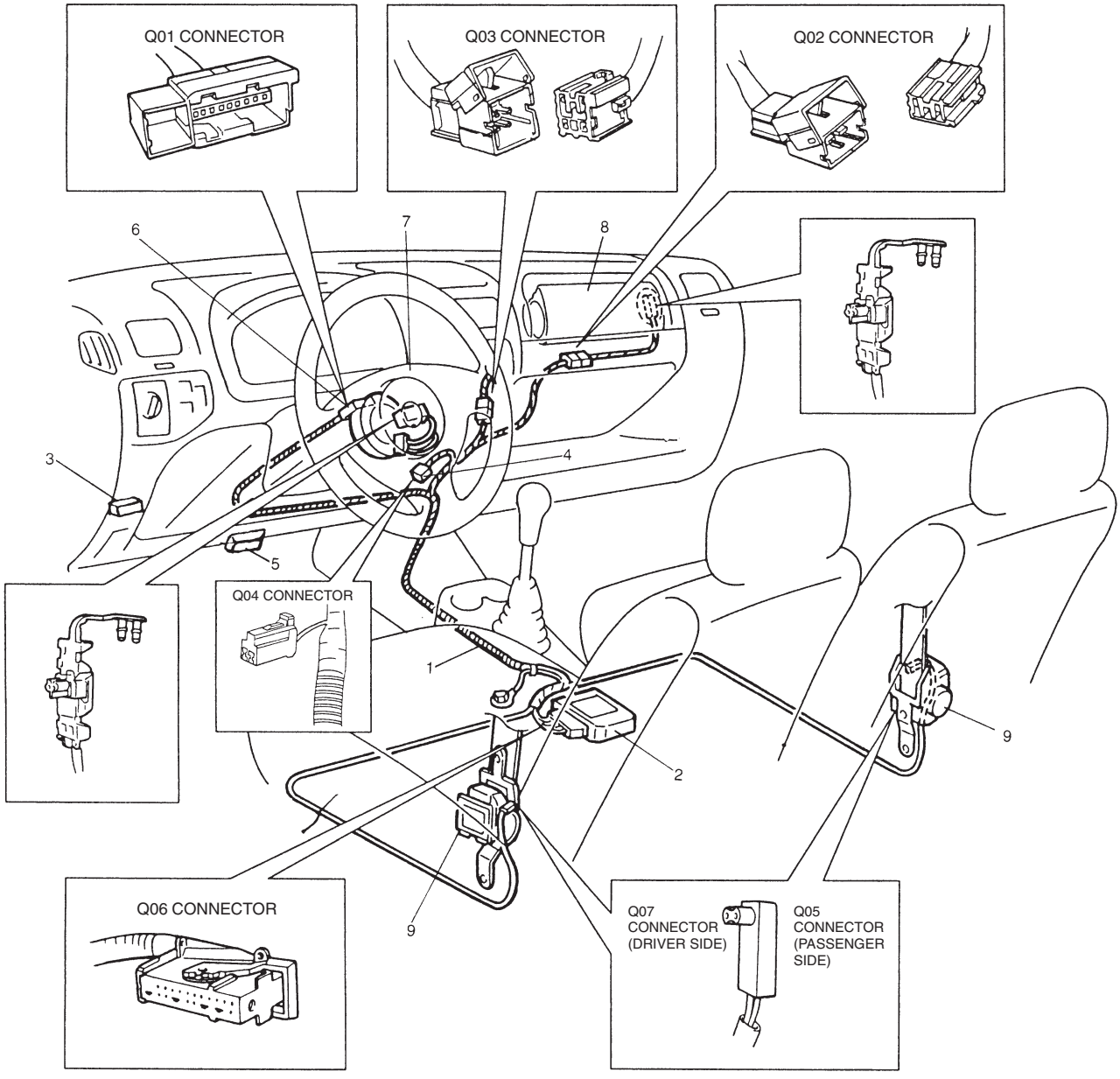

1. Air bag harness
2. SDM
3. Circuit fuse box (“AIR BAG” fuse included)
4. Air bag monitor coupler
5. DLC (Data Link Connector)
6. Contact coil assembly
7. Driver air bag (inflator) module
8. Passenger air bag (inflator) module
9. Seat belt pretensioners

SYSTEM WIRING DIAGRAM

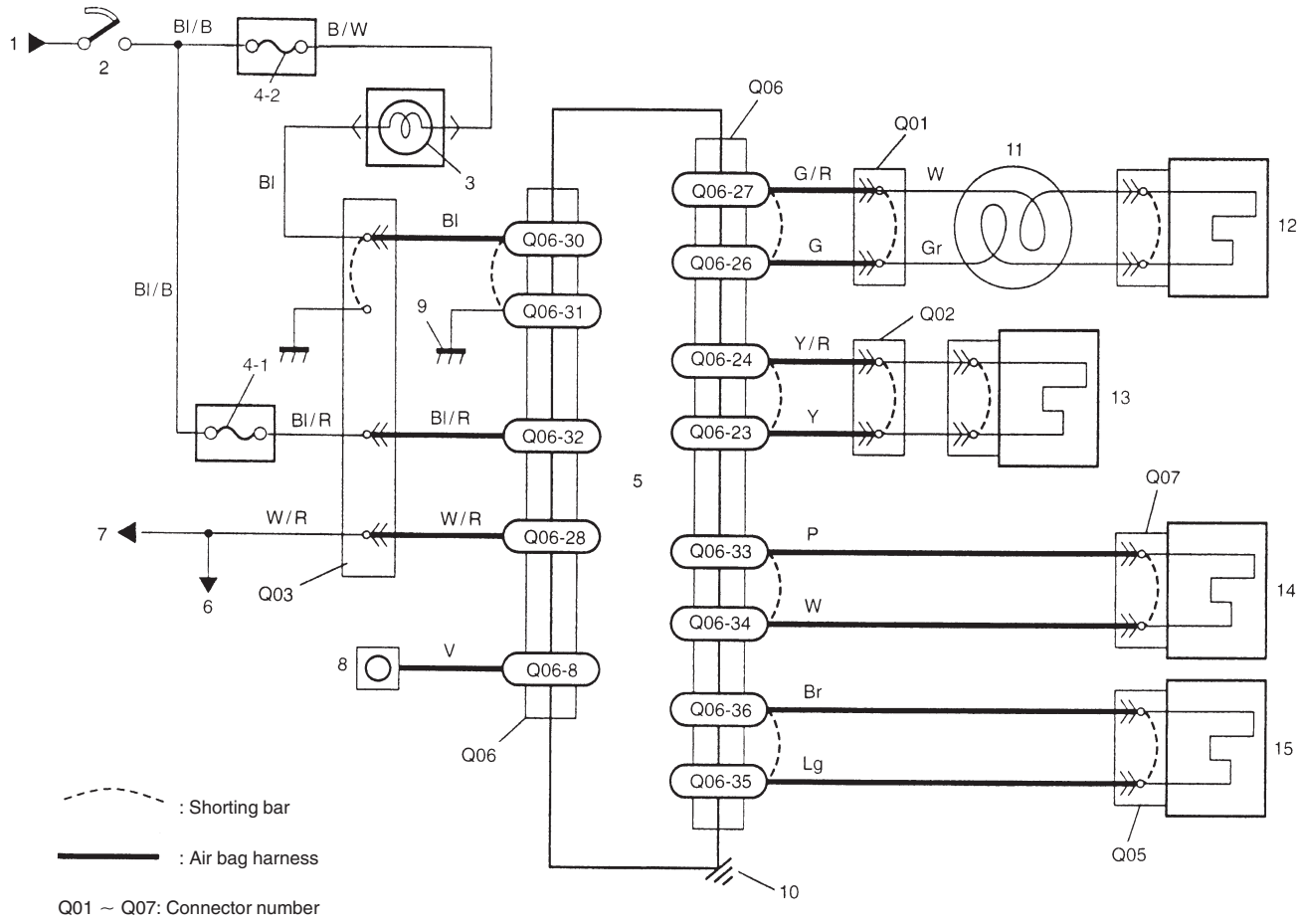

TERMINAL ARRANGEMENT OF SDM (VIEWED FROM HARNESS SIDE)

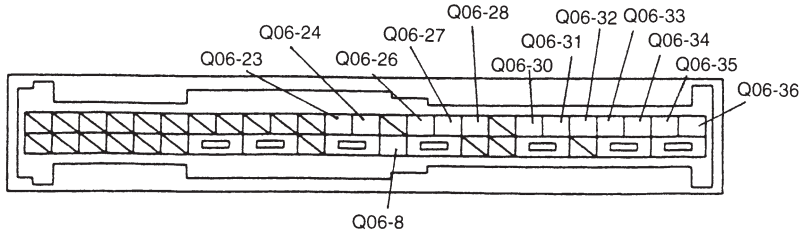

1. From main fuse
2. Ignition switch
3. "AIR BAG" warning lamp in combination meter

4-1. "AIR BAG" fuse in circuit fuse box
4-2. "IG COIL" fuse in circuit fuse box

5. SDM
6. To ECM, ICM (if equipped), EPS control module (if equipped) and ABS control module (if equipped)
7. To data link connector (DLC)
8. Air bag monitor coupler
9. Ground for air bag system
10. SDM case ground
11. Contact coil assembly
12. Driver air bag (inflator) module
13. Passenger air bag (inflator) module (if equipped)
14. Driver seat belt pretensioner
15. Passenger seat belt pretensioner

WIRE HARNESS COLOR

B : Black	G/R : Green/Red
B/W : Black/White	Lg : Lightgreen
B/Bl : Black/Blue	P : Pink
Bl : Blue	V : Violet
Bl/R : Blue/Red	Y : Yellow
Br : Brown	Y/B : Yellow/Black
G : Green	Y/R : Yellow/Red
Gr : Gray	W : White

CONNECTOR "Q06" (SDM connector)

TERMINAL	CIRCUIT	
Q06-23	Passenger air bag (inflator) module	Low
Q06-24		High
Q06-28	Data link connector (DLC)	
Q06-30	"AIR BAG" warning lamp	
Q06-26	Driver air bag (inflator) module	Low
Q06-27		High
Q06-8	Diagnosis switch	
Q06-31	Ground	
Q06-35	Passenger pretensioner (if equipped)	Low
Q06-36		High
Q06-34	Driver pretensioner (if equipped)	Low
Q06-33		High
Q06-32	Ignition switch (power source)	

DIAGNOSIS

WARNING:
To avoid deployment when troubleshooting the air bag system, do not use electrical test equipment such as a battery powered or AC powered voltmeter, ohmmeter, etc., or any type of electrical equipment other than that specified in this manual. Do not use a non-powered probe type tester.
Instructions in this manual must be followed carefully, otherwise personal injury may result.

DIAGNOSTIC TROUBLE CODES

The “Air Bag Diagnostic System Check” must always be the starting point of any air bag system diagnosis. The “Air Bag Diagnostic System Check” checks for proper air bag warning lamp operation and checks for air bag diagnostic trouble codes using on-board diagnosis function.

USE OF SPECIAL TOOLS

WARNING:
To avoid deployment when troubleshooting the air bag system, do not use electrical test equipment such as a battery powered or AC powered voltmeter, ohmmeter, etc., or any type of electrical equipment other than that specified in this manual. Do not use a non-powered probe type tester.
Instructions in this manual must be followed carefully, otherwise personal injury may result.

You should be familiar with the tools listed in this section under the heading “Special Tools”. You should be able to measure voltage and resistance. You should be familiar with proper use of SUZUKI scan tool, Air Bag Driver/Passenger Load Tool, Connector Test Adapter Kit and the Digital Multimeter.

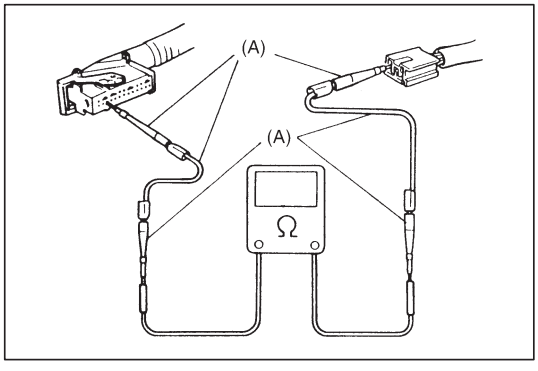

Special Tool (Connector Test Adapter Kit)
(A): 09932-76010

This must be used whenever a diagnostic procedure requests checking or probing a terminal.
Using the appropriate adapter in the special tool will ensure that no damage to the terminal will occur from the multimeter probe, such as spreading or bending.

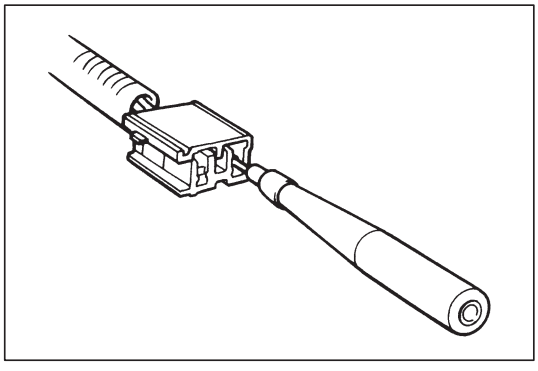

The adapter will also give an idea of whether contact tension is sufficient, helping to find an open or intermittent open due to poor terminal contact.

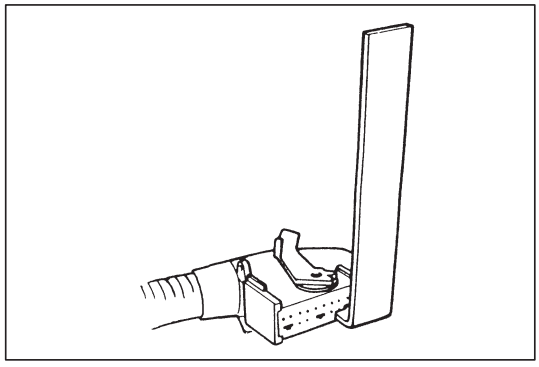

An SDM short bar release tool is included in the connector test adapter kit.
Inserting it into the SDM connector will release the shorting bar.

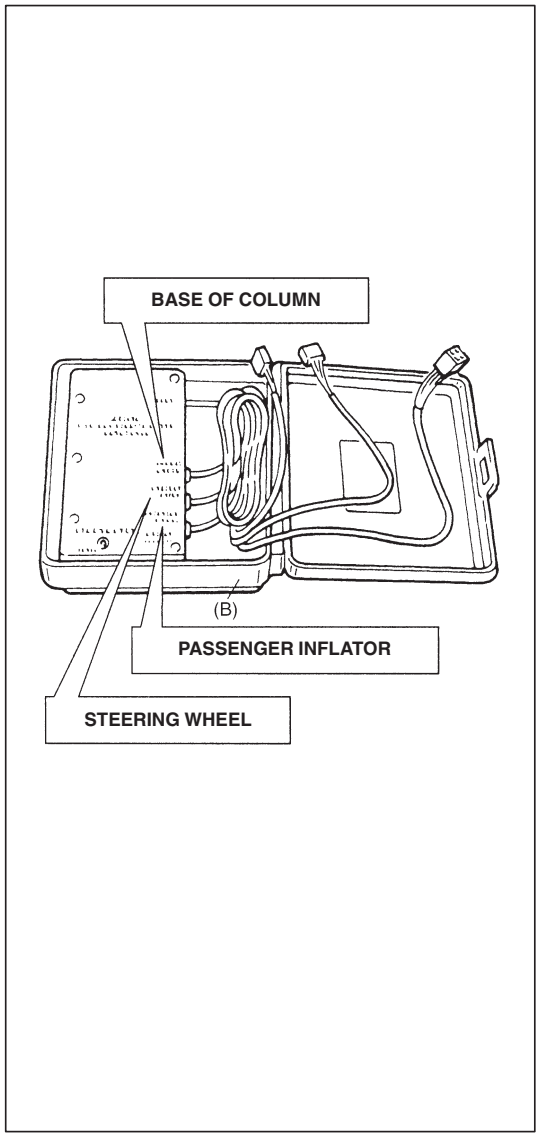

Special Tool (Air Bag Driver/Passenger Load Tool) (B): 09932-75010

This tool is used only when called for in this section. It is used as a diagnostic aid and safety device to prevent inadvertent air bag (inflator) module deployment and seat belt pretensioner activation.
The load tool has three connectors attached to its case which are electrically functional and serve as resistive load substitutions.

One of connectors (“STEERING WHEEL”) is used to substitute the load of the followings.

- driver air bag (inflator) module when it is connected at the top of the column to the contact coil assembly.
- passenger air bag (inflator) module when it is connected to the air bag harness connector for passenger air bag (inflator) module.
- driver and passenger seat belt pretensioner when it is connected to air bag harness connector for driver and passenger seat belt pretensioner.

The other connectors (“BASE OF COLUMN” and “PASSENGER INFLATOR”) are not used for this vehicle.

By substituting the resistance of the load tool when called for, a determination can be made as to whether an inflator circuit component is causing system malfunction and which component is causing the malfunction.
The load tool should be used only when specifically called for in the diagnostic procedures.

INTERMITTENTS AND POOR CONNECTIONS

Most intermittents are caused by faulty electrical connections or wiring. When a check for proper connection is requested in a diagnostic flow table, perform careful check of suspect circuits for:

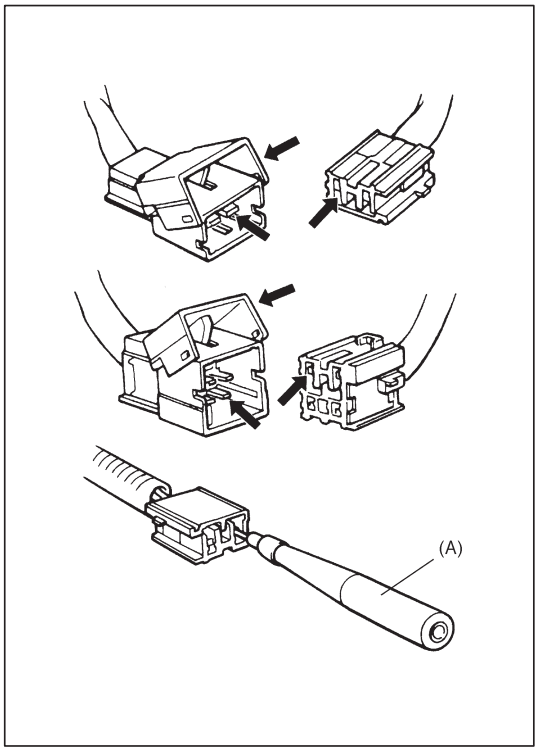

- Poor mating of connector halves, or terminals not fully seated in the connector body (backed out).
- Dirt or corrosion on the terminals. The terminals must be clean and free of any foreign material which could impede proper terminal contact.
  However, cleaning the terminal with a sand paper or the like is prohibited.
- Damaged connector body, exposing the terminals to moisture and dirt, as well as not maintaining proper terminal orientation with the component or mating connector.
- Improperly formed or damaged terminals.
  Check each connector terminal in problem circuits carefully to ensure good contact tension by using the corresponding mating terminal included in the connector test adapter kit (special tool).
  If contact tension is not enough, reform it to increase contact tension or replace.

  Special Tool (Connector Test Adapter Kit)
  (A): 09932-76010

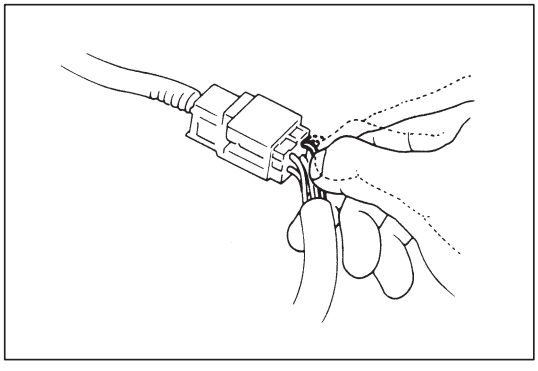

- Poor terminal-to-wire connection.
  Check each wire harness in problem circuits for poor connection by shaking it by hand lightly. If any abnormal condition is found, change the wire harness assembly or component parts with new ones.

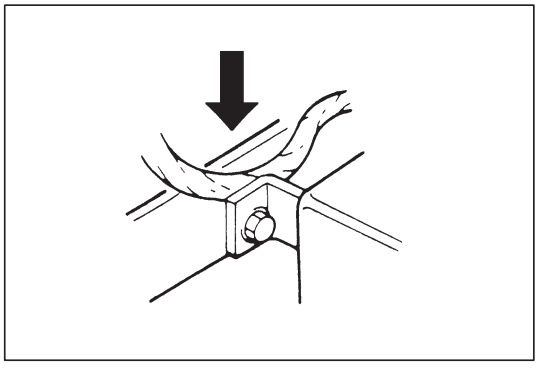

- Wire insulation which is rubbed through, causing an intermittent short as the bare area touches other wiring or parts of the vehicle.
- Wire broken inside the insulation. This condition could cause a continuity check to show a good circuit, but if only 1 or 2 strands of a multi-strand-type wire are intact, resistance could be far too high.

If any abnormality is found, repair or replace as a wire harness assembly.

AIR BAG DIAGNOSTIC SYSTEM CHECK

WARNING:
To avoid deployment when troubleshooting the air bag system, do not use electrical test equipment such as a battery powered or AC powered voltmeter, ohmmeter, etc., or any type of electrical equipment other than that specified in this manual. Do not use a non-powered probe type tester.
Instructions in this manual must be followed carefully, otherwise personal injury may result.

CAUTION:
The order in which diagnostic trouble codes are diagnosed is very important. Failure to diagnose the diagnostic trouble codes in the order specified may result in extended diagnostic time, incorrect diagnosis and incorrect parts replacement.

The diagnostic procedures used in this section are designed to find and repair air bag system malfunctions. To get the best results, it is important to use the diagnostic flow tables and follow the sequence listed below.

A. PERFORM THE “AIR BAG DIAGNOSTIC SYSTEM CHECK FLOW TABLE”
The “Air Bag Diagnostic System Check Flow Table” must be the starting point of any air bag system diagnosis. The “Air Bag Diagnostic System Check Flow Table” checks for proper air bag warning lamp operation through air bag warning lamp and whether air bag diagnostic trouble codes exist.

B. REFER TO THE PROPER DIAGNOSTIC TABLE AS DIRECTED BY THE “AIR BAG DIAGNOSTIC SYSTEM CHECK FLOW TABLE”.
The “Air Bag Diagnostic System Check Flow Table” will lead you to the correct table to diagnose any air bag system malfunctions. Bypassing these procedures may result in extended diagnostic time, incorrect diagnosis and incorrect parts replacement.

C. REPEAT THE “AIR BAG DIAGNOSTIC SYSTEM CHECK FLOW TABLE” AFTER ANY REPAIR OR DIAGNOSTIC PROCEDURES HAVE BEEN PERFORMED.
Performing the “Air Bag Diagnostic System Check Flow Table” after all repair or diagnostic procedures will ensure that the repair has been made correctly and that no other malfunctions exist.

AIR BAG DIAGNOSTIC SYSTEM CHECK FLOW TABLE

STEP	ACTION	YES	NO
1	1) Make sure that battery voltage is about 11 V or higher. 2) Note air bag warning lamp as ignition switch is turned ON. 3) Does air bag warning lamp come ON or flash when ignition switch is turned ON?	Go to step 2.	Air bag warning lamp does not come ON. Proceed to Table B.
2	Does air bag warning lamp come ON steady?	Air bag warning lamp come ON steady. Proceed to Table A.	Go to step 3.
3	Does air bag warning lamp keep flashing (indicating DTC) even after initial 6-time flashing when ignition switch is ON?	Air bag warning lamp flashes. Proceed to Table C.	Go to step 4.
4	Does air bag warning lamp turn OFF, after flashing 6 times?	Go to step 5.	Go to step 6.
5	1) Check DTC. Refer to DTC CHECK. 2) Not using SUZUKI scan tool: Is DTC 12 indicated? Using SUZUKI scan tool: Is “NO DTC” displayed?	Air bag system is in good condition.	An intermittent trouble has occurred at some place. Check the connector harness, etc. related to the sensed DTC. Refer to INTERMITTENT AND POOR CONNECTIONS in this section. Then clear DTC (Refer to DTC CLEARANCE) and repeat this table.
6	1) Check DTC. Refer to DTC CHECK. 2) Not using SUZUKI scan tool: Is DTC 12 indicated? Using SUZUKI scan tool: Is “NO DTC” displayed?	Substitute a known-good SDM and recheck.	Check and repair according to Flow Table corresponding to that DTC.

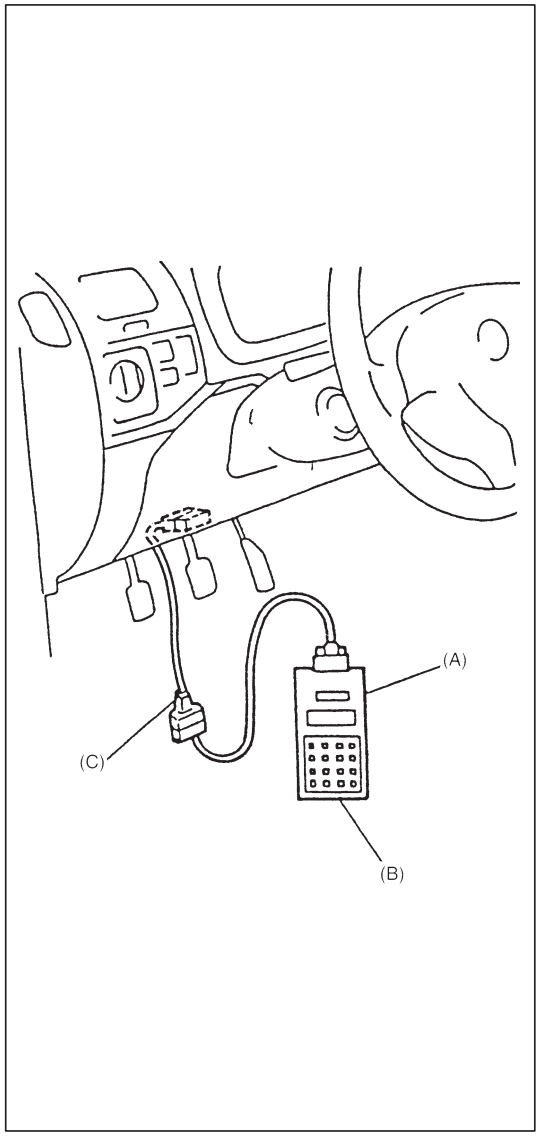

DIAGNOSTIC TROUBLE CODE (DTC) CHECK

[Using SUZUKI scan tool]

1) Turn ignition switch OFF.
2) After setting cartridge to SUZUKI scan tool, connect it to data link connector (DLC) located on underside of instrument panel at driver's seat side.

   Special Tool
   (A): 09931-76011 (SUZUKI scan tool)
   (B): Mass storage cartridge
   (C): 09931-76030 (16/14 pin DLC cable)

4) Turn ignition switch ON.
5) Read DTC according to instructions displayed on scan tool and print it or write it down. Refer to scan tool operator's manual for further details.

   NOTE:
   If scan tool cannot communicate with SDM, proceed to TABLE E.

6) After completing the check, turn ignition switch OFF and disconnect scan tool cable from data link connector (DLC).

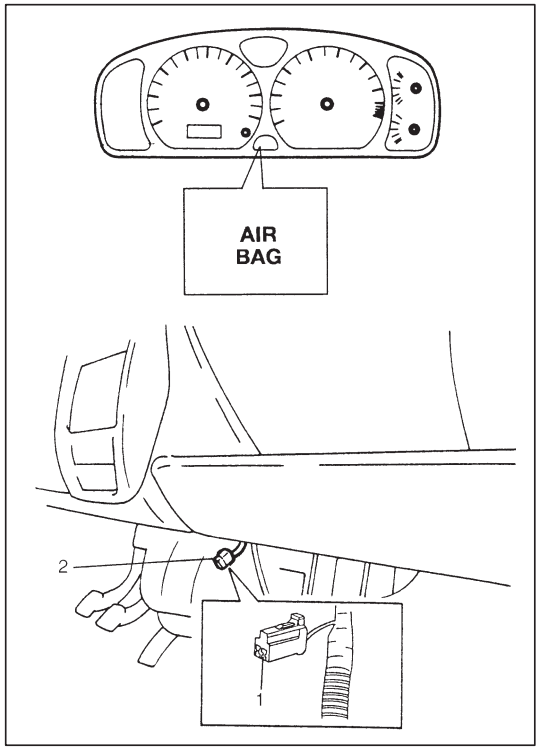

[Not using SUZUKI scan tool]

1) Perform Step 1 to 4 in AIR BAG DIAGNOSTIC FLOW TABLE on previous page to check air bag warning lamp for operation.
2) Using service wire, ground diagnosis switch terminal (1) in monitor coupler (2) (to steering column, etc.).
3) Turn ignition switch ON.
4) Read DTC from flashing pattern of air bag warning lamp. (Refer to "Diagnostic Trouble Code Table" in this section.)

   NOTE:
   When air bag warning lamp doesn't indicate flashing pattern of DTC while diagnosis switch terminal on air bag monitor coupler is grounded, proceed to TABLE D.

5) After completing the check, turn ignition switch OFF and disconnect service wire from air bag monitor coupler.

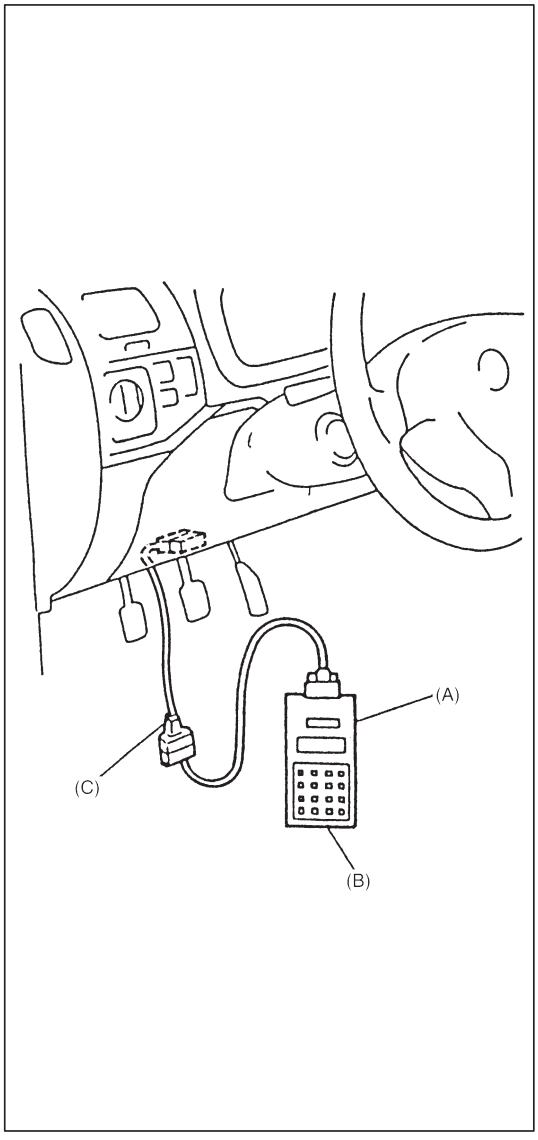

DIAGNOSTIC TROUBLE CODE (DTC) CLEARANCE

NOTE:
As execution of the DTC clearance will clear all DTCs, be sure to record all DTCs before servicing.

[Using SUZUKI scan tool]

1) Turn ignition switch OFF.
2) Connect SUZUKI scan tool to data link connector (DLC) in the same manner as when making this connection for DTC check.

   Special Tool
   (A): 09931-76011 (SUZUKI scan tool)
   (B): Mass storage cartridge
   (C): 09931-76030 (16/14 pin DLC cable)

3) Turn ignition switch ON.

   NOTE:
   If scan tool cannot communicate with SDM, proceed to TABLE E.

4) Erase DTC according to instructions displayed on SUZUKI scan tool.
   Refer to SUZUKI scan tool operator's manual for further details.
5) After completing the check, turn ignition switch OFF and disconnect SUZUKI scan tool from data link connector (DLC).
6) Perform "Diagnostic Trouble Code (DTC) Check" and confirm that "NO DTC" is displayed and not malfunction DTC.

   NOTE:
   If DTC 51 or DTC 71 is stored in SDM, it is not possible to clear DTC.

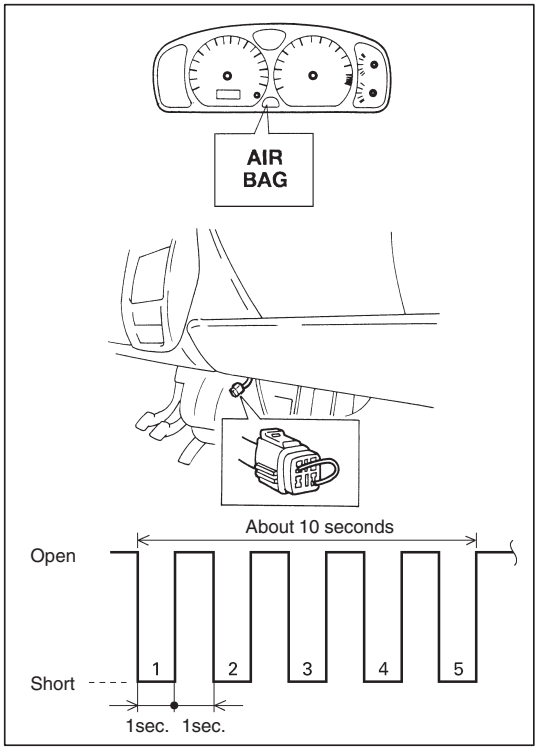

[Not using SUZUKI scan tool]

1) Turn ignition switch ON and wait about 6 seconds or more.
2) Using service wire, repeat shorting and opening between diagnosis switch terminal and ground terminal on air bag monitor coupler 5 times at about 1 second intervals.
3) Perform "Diagnosis Trouble Code (DTC) Check" and confirm that normal DTC (DTC 12) is displayed and not malfunction DTC.

   NOTE:
   If DTC 51 or DTC 71 is stored in SDM, it is not possible to clear DTC.

DIAGNOSTIC TROUBLE CODE TABLE (Page 1 of 2)

EXAMPLE: WHEN DRIVER AIR BAG INITIATOR CIRCUIT RESISTANCE HIGH (CODE NO.21) IS SET

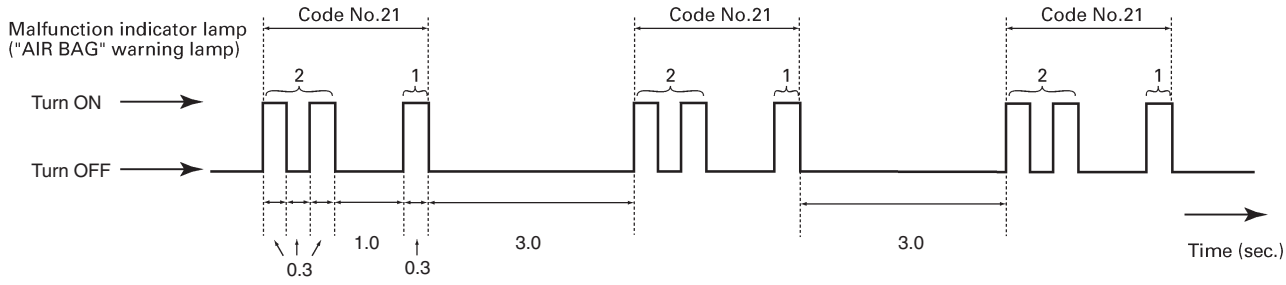

DTC (displayed on SUZUKI scan tool)	DTC (indicated by air bag warning lamp)	Air bag warning lamp flashing pattern	DIAGNOSIS	
NO DTC	12		Normal	
B1015	15		Passenger air bag circuit	Resistance high
B1016	16			Resistance low
B1018	18			Short to ground
B1019	19			Short to power circuit
B1021	21		Driver air bag circuit	Resistance high
B1022	22			Resistance low
B1024	24			Short to ground
B1025	25			Short to power circuit
B1031	31		Power source voltage	Too high
B1032	32			Too low

DIAGNOSTIC TROUBLE CODE TABLE (Page 2 of 2)

DTC (displayed on SUZUKI scan tool)	DTC (indicated by air bag warning lamp)	Air bag warning lamp flashing pattern	DIAGNOSIS	
B1041	41		Driver pretensioner circuit	Resistance high
B1042	42			Resistance low
B1043	43			Short to ground
B1044	44			Short to power circuit
B1045	45		Passenger pretensioner circuit	Resistance high
B1046	46			Resistance low
B1047	47			Short to ground
B1048	48			Short to power circuit
B1051	51		SDM	Frontal crash detected
B1061	61		Warning lamp circuit	Warning lamp failure
B1071	71		SDM	Internal fault

NOTE:

- **When 2 or more codes are indicated, the lowest numbered code will appear first.**
- **If a code not listed on the table is displayed, then the SDM is faulty.**
- **After ignition switch is turned ON, air bag warning lamp flashes 6 times and then operates as shown below depending on the trouble condition and whether diagnosis switch terminal is grounded or not. For grounding diagnosis switch terminal to check DTC, refer to "DIAGNOSIS TROUBLE CODE (DTC) CHECK – [Not using SUZUKI scan tool]" in this section.**

SYSTEM CONDITION		AIR BAG WARNING LAMP	
		Diagnosis switch terminal is not grounded	Diagnosis switch terminal is grounded
In good condition at present	No trouble in the past	OFF	DTC 12
	Trouble occurred in the past	ON and turns OFF after 6 sec.	History DTC
Abnormality exists at present	No trouble in the past	ON	Current DTC
	Trouble occurred in the past	ON	Current and history DTCs

TABLE A – AIR BAG WARNING LAMP COMES ON STEADY WITHOUT FLASHING
TABLE B – AIR BAG WARNING LAMP DOES NOT COME ON WITH IGNITION SWITCH ON
TABLE C – AIR BAG WARNING LAMP FLASHES EVEN AFTER INITIAL 6-TIME FLASHING
TABLE D – AIR BAG WARNING LAMP CANNOT INDICATE FLASHING PATTERN OF DTC
TABLE E – SCAN TOOL CANNOT COMMUNICATE SDM

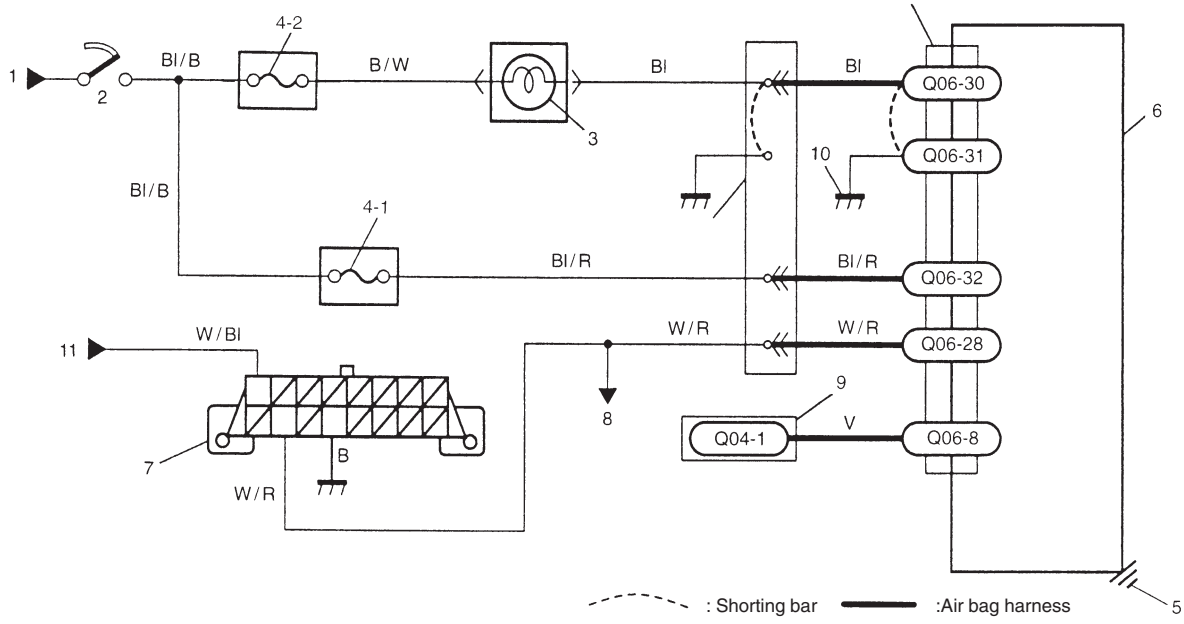

1. From main fuse
2. Ignition switch
3. “AIR BAG” warning lamp in combination meter
4-1. “AIR BAG” fuse in circuit fuse box
4-2. “IG COIL” fuse in circuit fuse box
5. SDM case ground
6. SDM
7. DLC (Data Link Connector)
8. To ECM, ICM (if equipped), EPS control module (if equipped) and ABS controller (if equipped)
9. Air bag monitor coupler
10. Ground for air bag system
11. From circuit fuse

CAUTION:
- **Be sure to perform “Air Bag Diagnostic System Check Flow Table” in this section before starting diagnosis according to flow table.**
- **When measurement of resistance or voltage is required in this table, use a special digital multimeter (refer to SPECIAL TOOLS in this section) along with a correct terminal adapter from special tool (Connector test adaptor kit).**
- **When a check for proper connection is required, refer to “Intermittent and Poor Connections” in this section.**
- **If there is open circuit in the air bag wire harness, connector or terminal is found damaged, replace the wire harness, connector and terminal as an assembly.**

DIAGNOSTIC FLOW TABLE

Table A: AIR BAG WARNING LAMP COMES ON STEADY WITHOUT FLASHING

STEP	ACTION	YES	NO
1	1) Check connections at Q03 and Q06 connectors with ignition switch OFF. Are they properly connected and secured by lock levers of couplers?	Go to step 2.	Reconnect and secure them with lock levers.
2	1) Ignition switch OFF. 2) Remove and inspect “AIR BAG” fuse. Is fuse good?	Go to step 2.	“Bl/R” wire short to ground. After repair, replace “AIR BAG” fuse.
3	1) Disconnect SDM connector. 2) Check proper connection to SDM at terminal Q06-32. 3) If OK then check voltage between Q06-32 terminal of SDM connector and body ground with ignition switch ON. (See figure below.) Is it 8 V more?	Go to step 3.	“Bl/R” wire (between “AIR BAG” fuse and SDM connector) open, “Bl/B” wire (between ignition switch and air bag fuse) open or shorted to ground.
4	1) Disconnect connector from combination meter, referring to SECTION 8C. 2) Check continuity between Q06-30 terminal of SDM connector and body ground. (See figure below.) Is there continuity?	“Bl” wire (between combination meter and SDM connector) short to ground.	Substitute a known-good SDM and recheck.

Fig. for STEP 3

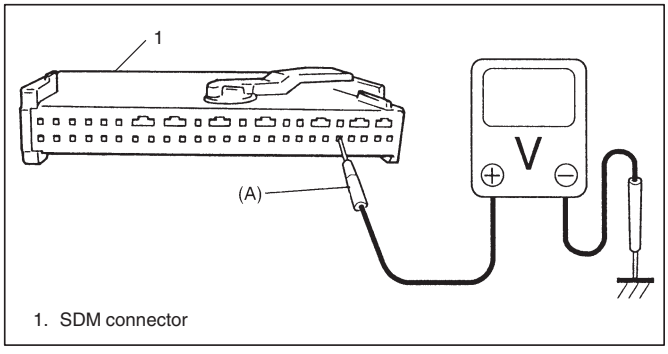

1. SDM connector

Fig. for STEP 4

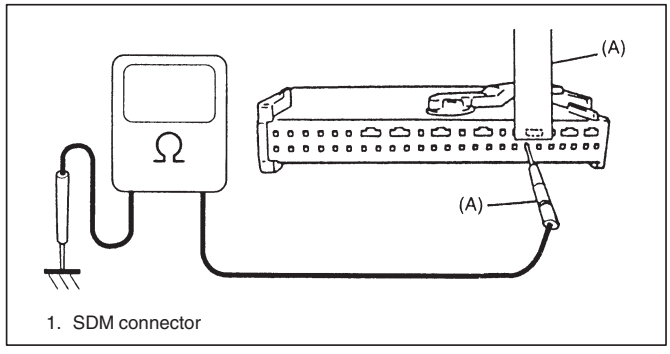

1. SDM connector

Special Tool
(A): 09932-76010

NOTE:
Upon completion of inspection and repair work, perform following items.
1) Reconnect all air bag system components, ensure all components are properly mounted.
2) Repeat “Air Bag Diagnostic System Check” in this section to confirm that the trouble has been corrected.

Table B: AIR BAG WARNING LAMP DOES NOT COME ON WITH IGNITION SWITCH ON

STEP	ACTION	YES	NO
1	1) Set parking brake. 2) Note combination meter when ignition switch is turned ON. Does the “BRAKE” indicator (warning lamp) come ON?	Go to step 2.	“B/W” wire (between ignition switch and combination cluster) open or short to ground.
2	1) Disconnect SDM. 2) Check proper connection to SDM at terminal Q06-30. 3) If OK then check voltage from Q06-30 terminal of SDM connector to body ground with ignition switch ON. (See figure below.) Is it 8 V or more?	Substitute a known-good SDM and recheck.	Go to step 3.
3	1) Remove combination meter, referring to SECTION 8C. 2) Check proper connection to combination meter at terminal for air bag warning lamp and to SDM at terminal Q06-30. 3) If OK then check resistance between “Bl” wire terminal of combination meter connector and Q06-30 terminal of SDM connector. (See figure below.) Is there continuity?	Go to step 4.	Repair high resistance or open in “Bl” wire circuit (between combination meter and SDM).
4	1) Measure voltage from Q06-30 terminal of SDM connector to body ground with ignition switch ON. Is it 8 V or more?	Repair short from “Bl” wire circuit (between combination meter and SDM) to power circuit.	Go to step 5.
5	1) Remove and inspect “AIR BAG” bulb. Is bulb good?	Substitute a known-good combination meter and recheck.	Replace bulb.

Fig. for STEP 2

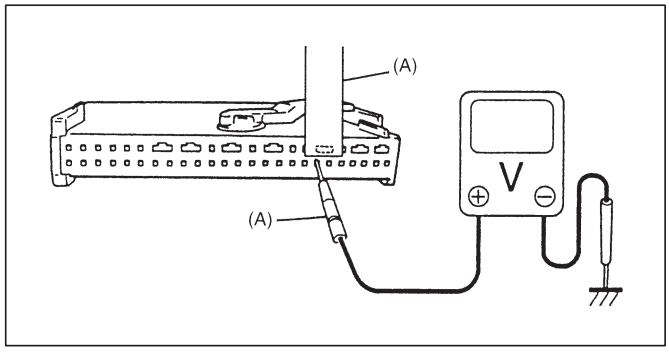

Fig. STEP 3

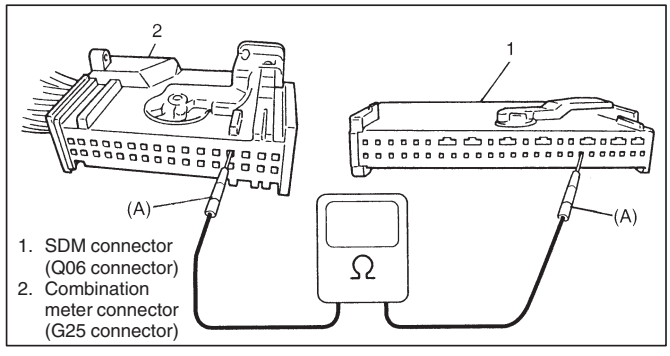

Special Tool
(A): 09932-76010

NOTE:
Upon completion of inspection and repair work, perform following items.
1) Reconnect all air bag system components, ensure all components are properly mounted.
2) Repeat “Air Bag Diagnostic System Check” in this section to confirm that the trouble has been corrected.

Table C: AIR BAG WARNING LAMP FLASHES EVEN AFTER INITIAL 6-TIME FLASHING

STEP	ACTION	YES	NO
1	1) Check air bag monitor coupler. Is diagnosis switch terminal in air bag monitor coupler grounded by service wire?	Go to step 2.	Remove service wire.
2	1) With ignition switch OFF, disconnect SDM connector. 2) Check continuity between Q06-8 terminal of SDM connector and body ground. (See figure below.) Is there continuity?	Repair short from “V” wire circuit to ground.	Substitute a known-good SDM and recheck.

Fig. for STEP 2

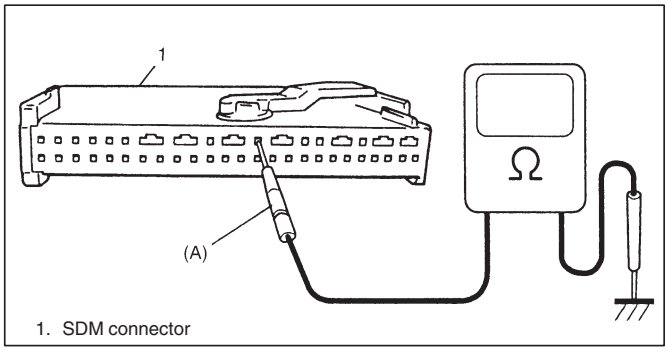

Special Tool
(A): 09932-76010

NOTE:
Upon completion of inspection and repair work, perform following items.
1) Reconnect all air bag system components, ensure all components are properly mounted.
2) Repeat “Air Bag Diagnostic System Check” in this section to confirm that the trouble has been corrected.

Table D: AIR BAG WARNING LAMP CANNOT INDICATE FLASHING PATTERN OF DTC EVEN WITH DIAGNOSIS SWITCH TERMINAL GROUNDED

STEP	ACTION	YES	NO
1	1) Inspect service wire between diagnostic switch terminal on air bag monitor coupler and body ground. Is it securely connected between them by service wire?	Go to step 2.	Properly connect and ground diagnostic switch terminal on air bag monitor coupler to body ground by service wire.
2	1) Disconnect SDM connector from SDM. 2) Check for proper connection at “V” wire terminal (Q06-8 terminal of SDM connector). 3) If OK then check continuity between terminals Q04-1 and Q06-8. Is there continuity?	Substitute a known-good SDM and recheck.	Check “V” wire terminals. If OK then “V” wire circuit high resistance or open.

Fig. for STEP 2

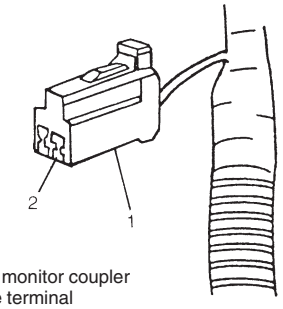

1. Air bag monitor coupler
2. “V” wire terminal

NOTE:
Upon completion of inspection and repair work, perform following items.
1) Reconnect all air bag system components, ensure all components are properly mounted.
2) Repeat “Air Bag Diagnostic System Check” in this section to confirm that the trouble has been corrected.

TABLE E: SCAN TOOL CANNOT COMMUNICATE WITH SDM

STEP	ACTION	YES	NO
1	1) Make sure that SUZUKI scan tool is free from malfunction and correct cartridge for air bag system is used. 2) Ignition switch OFF. 3) Check proper connection of SUZUKI scan tool to DLC. Is connection in good condition?	Go to step 2.	Properly connect SUZUKI scan tool to DLC.
2	1) Check if communication is possible by trying communication with other control module (ECM, ICM (if equipped), P/S control module (if equipped) or ABS control module (if equipped)). Is it possible to communicate with other control module?	Go to step 3.	Repair open in common section of serial data circuit (“W/R” wire circuit) used by all controllers or short to ground or power circuit which has occurred somewhere in serial data circuit (“W/R” wire circuit).
3	1) With ignition switch OFF, disconnect Q03 connector from SDM. 2) Check proper connection at “W/R” wire terminal for DLC in Q03 connector. 3) If OK, then check continuity between “W/R” wire terminal in Q03 connector and Q06-28 terminal of SDM connector. (See figure below.) Is there continuity?	Substitute a known-good SDM and recheck.	Repair high resistance or open in “W/R” wire circuit (in air bag harness).

Fig. for STEP 1

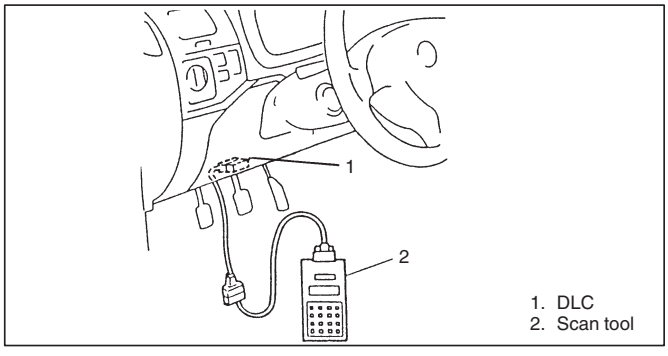

Fig. STEP 3

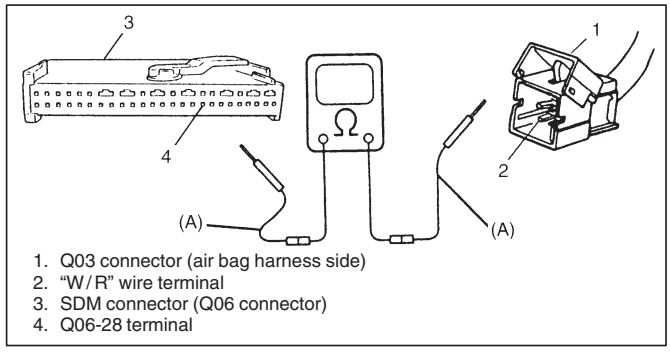

Special Tool
(A): 09932-76010

NOTE:
Upon completion of inspection and repair work, perform following items.
1) Reconnect all air bag system components, ensure all components are properly mounted.
2) Repeat “AIR BAG DIAGNOSTIC SYSTEM CHECK” to confirm that the trouble has been corrected.

DTC 15 – PASSENGER AIR BAG INITIATOR CIRCUIT RESISTANCE HIGH
DTC 16 – PASSENGER AIR BAG INITIATOR CIRCUIT RESISTANCE LOW
DTC 18 – PASSENGER AIR BAG INITIATOR CIRCUIT SHORT TO GROUND
DTC 19 – PASSENGER AIR BAG INITIATOR CIRCUIT SHORT TO POWER CIRCUIT

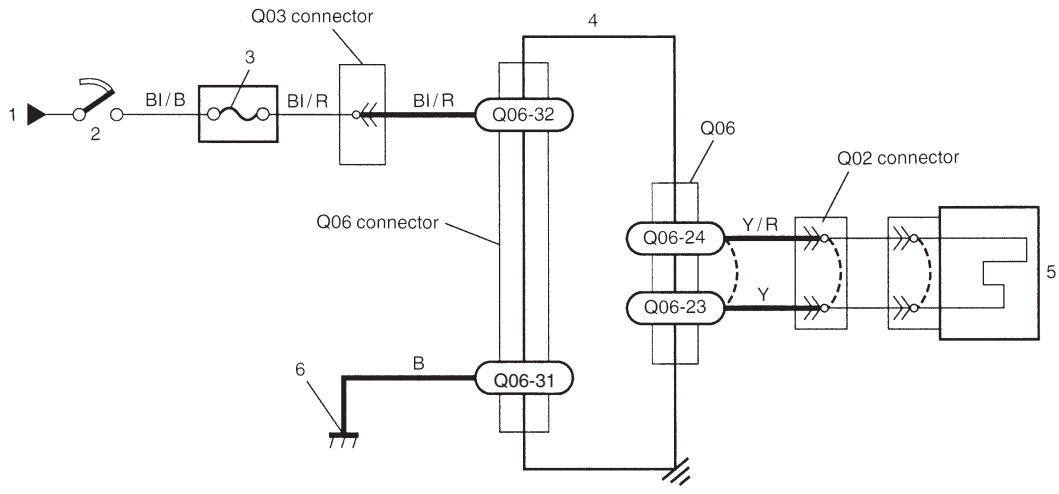

1. From main fuse
2. Ignition switch
3. "AIR BAG" fuse in circuit fuse box
4. SDM
5. Passenger air bag (inflator) module
6. Ground for air bag system

: Shorting bar

: Air bag harness

CAUTION:
- **When measurement of resistance or voltage is required in this table, use a special digital multimeter (refer to SPECIAL TOOLS in this section) along with a correct terminal adaptor from special tool (Connector test adapter kit).**
- **When a check for proper connection is required, refer to "Intermittent and Poor Connections" in this section.**
- **If there is open circuit in the air bag wire harness, connector or terminal is found damaged, replace the wire harness, connector and terminal as an assembly.**

DTC WILL SET WHEN:

DTC 15: The combined resistance of the passenger air bag (inflator) module, harness wiring and connector terminal contact is above a specified value for specified time.

DTC 16: The combined resistance of the passenger air bag (inflator) module, harness wiring and connector terminal contact is below a specified value for specified time.

DTC 18: The voltage measured at passenger air bag initiator circuit is below a specified value for specified time.

DTC 19: The voltage measured at passenger air bag initiator circuit is above a specified value for specified time.

DIAGNOSTIC FLOW TABLE

DTC 15: PASSENGER AIR BAG INITIATOR CIRCUIT RESISTANCE HIGH

STEP	ACTION	YES	NO
1	Was item “AIR BAG SYSTEM CHECK FLOW TABLE” described in this section performed?	Go to step 2.	Perform “AIR BAG SYSTEM CHECK FLOW TABLE” in this section.
2	1) With ignition switch OFF, disconnect passenger air bag (inflator) module Q02 connector behind the glove box. 2) Check proper connection to passenger air bag (inflator) module at terminals in Q02 connector. 3) If OK then connect Special Tool (B) to Q02 connector in stead of passenger air bag (inflator) module. (See figure below.) With ignition switch ON, is DTC 15 current?	Go to step 3.	1) Ignition switch OFF. 2) Replace passenger air bag (inflator) module.
3	1) With ignition switch OFF, disconnect SDM connector. 2) Check proper connection to SDM at terminals Q06-23 and Q06-24. 3) Release shorting bar in SDM connector inserting Special Tool (A), referring to figure below. 4) Measure resistance between terminals Q06-23 and Q06-24 with connected Special Tool (B). (See figure below.) Is resistance 3.8 Ω or less?	Substitute a known-good SDM and recheck.	Repair high resistance or open in “Y” or “Y/R” wire circuit.

Fig. for STEP 2 and 3

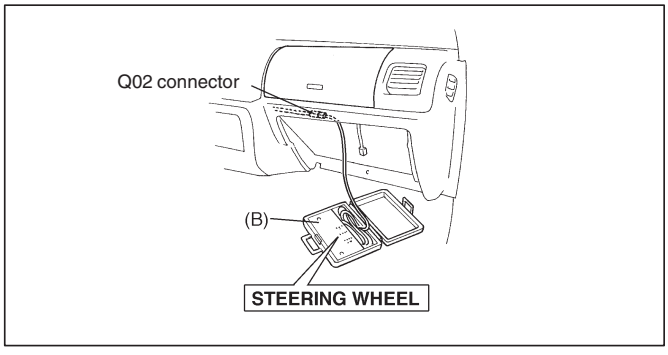

Fig. for STEP 3

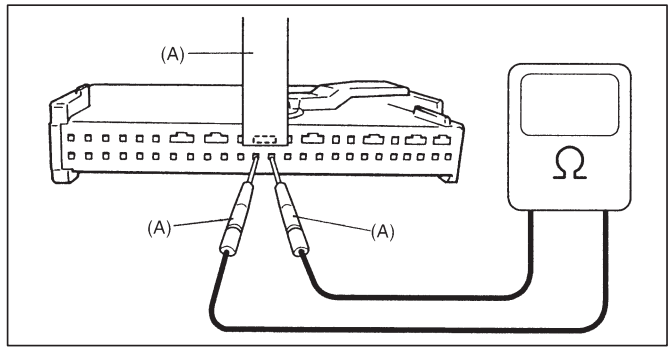

Special Tool
(A): 09932-76010
(B): 09932-75010

NOTE:
Upon completion of inspection and repair work, perform following items.
1) Reconnect all air bag system components, ensure all components are properly mounted.
2) Clear diagnostic trouble codes (Refer to “Diagnostic Trouble Code (DTC) Clearance”), if any.
3) Repeat “Air Bag Diagnostic System Check” in this section to confirm that the trouble has been corrected.

DTC 16: PASSENGER AIR BAG INITIATOR CIRCUIT RESISTANCE LOW

STEP	ACTION	YES	NO
1	Was item “AIR BAG SYSTEM CHECK FLOW TABLE” described in this section performed?	Go to step 2.	Perform “AIR BAG SYSTEM CHECK FLOW TABLE” in this section.
2	1) With ignition switch OFF, disconnect passenger air bag (inflator) module connector behind the glove box. 2) Check proper connection to passenger air bag (inflator) module at terminals in Q02 connector. 3) If OK then connect Special Tool (B) to Q02 connector in stead of passenger air bag (inflator) module. (See figure below.) With ignition switch ON, is DTC 16 current?	Go to step 3.	1) Ignition switch OFF. 2) Replace passenger air bag (inflator) module.
3	1) With ignition switch OFF, disconnect SDM connector. 2) Check proper connection to SDM at terminals Q06-23 and Q06-24. 3) Release shorting bar in SDM connector by inserting special tool (A), referring to the figure below. 4) Measure resistance between terminals Q06-23 and Q06-24 with connected Special Tool (B). (See figure below.) Is resistance 1.2 Ω or more?	Substitute a known-good SDM and recheck.	Repair short from “Y” wire circuit to “Y/R” wire circuit or from “Y” or “Y/R” wire circuit to other wire circuit.

Fig. for STEP 2 and 3

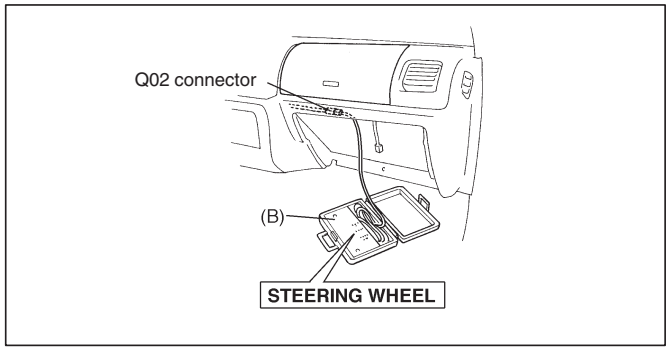

Fig. for STEP 3

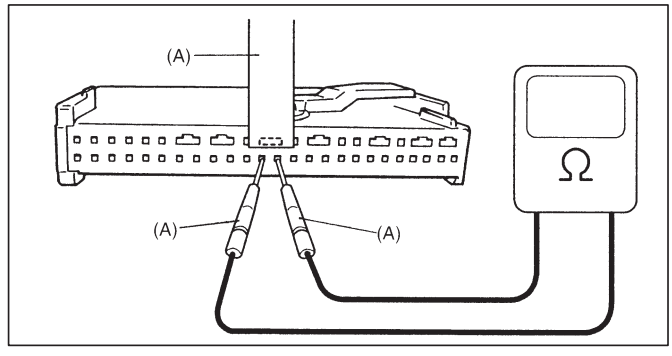

Special Tool
(A): 09932-76010
(B): 09932-75010

NOTE:
Upon completion of inspection and repair work, perform following items.
1) **Reconnect all air bag system components, ensure all components are properly mounted.**
2) **Clear diagnostic trouble codes (Refer to “Diagnostic Trouble Code (DTC) Clearance”), if any.**
3) **Repeat “Air Bag Diagnostic System Check” in this section to confirm that the trouble has been corrected.**

DTC 18: PASSENGER AIR BAG INITIATOR CIRCUIT SHORT TO GROUND

STEP	ACTION	YES	NO
1	Was item “AIR BAG SYSTEM CHECK FLOW TABLE” described in this section performed?	Go to step 2.	Perform “AIR BAG SYSTEM CHECK FLOW TABLE” in this section.
2	1) With ignition switch OFF, disconnect passenger air bag (inflator) module connector behind the glove box. 2) Check proper connection to passenger air bag (inflator) module at terminals in Q02 connector. 3) If OK then connect Special Tool (B) to Q02 connector instead of passenger air bag (inflator) module. (See figure below.) With ignition switch ON, is DTC 18 current?	Go to step 3.	1) Ignition switch OFF. 2) Replace passenger air bag (inflator) module.
3	1) With ignition switch OFF, disconnect Special Tool (B) and SDM connector. 2) Check continuity between Q06-23 and Q06-31 terminals. (See figure below.) Is there continuity?	Repair short from “Y” or “Y/R” wire circuit to ground.	Substitute a known-good SDM and recheck.

Fig. for STEP 2

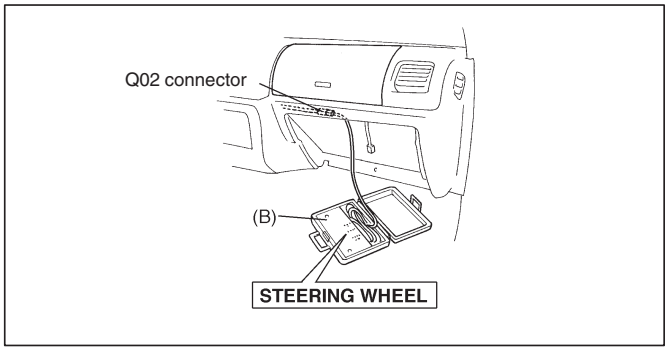

Fig. for STEP 3

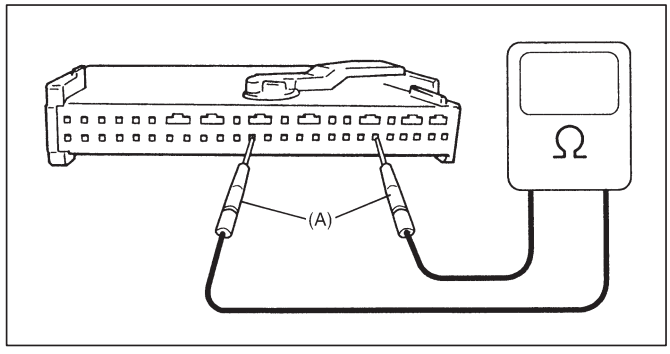

Special Tool
(A): 09932-76010
(B): 09932-75010

NOTE:
Upon completion of inspection and repair work, perform following items.
1) Reconnect all air bag system components, ensure all components are properly mounted.
2) Clear diagnostic trouble codes (Refer to “Diagnostic Trouble Code (DTC) Clearance”), if any.
3) Repeat “Air Bag Diagnostic System Check”in this section to confirm that the trouble has been corrected.

DTC 19: PASSENGER AIR BAG INITIATOR CIRCUIT SHORT TO POWER CIRCUIT

STEP	ACTION	YES	NO
1	Was item “AIR BAG SYSTEM CHECK FLOW TABLE” described in this section performed?	Go to step 2.	Perform “AIR BAG SYSTEM CHECK FLOW TABLE” in this section.
2	1) With ignition switch OFF, disconnect passenger air bag (inflator) module connector behind the glove box. 2) Check proper connection to passenger air bag (inflator) module at terminals in Q06-23 connector. 3) If OK then connect Special Tool (B) to Q06-23 connector in stead of passenger air bag (inflator) module. (See figure below.) With ignition switch ON, is DTC 19 current?	Go to step 3.	1) Ignition switch OFF. 2) Replace passenger air bag (inflator) module.
3	1) With ignition switch OFF, disconnect Special Tool (B) and SDM connector. 2) Measure voltage from Q06-24 terminal to body ground. (See figure below.) 3) With ignition switch ON, is voltage 1 V or less?	Substitute a known-good SDM and recheck.	Repair short from “Y” or “Y/R” wire circuit to power circuit.

Fig. for STEP 2

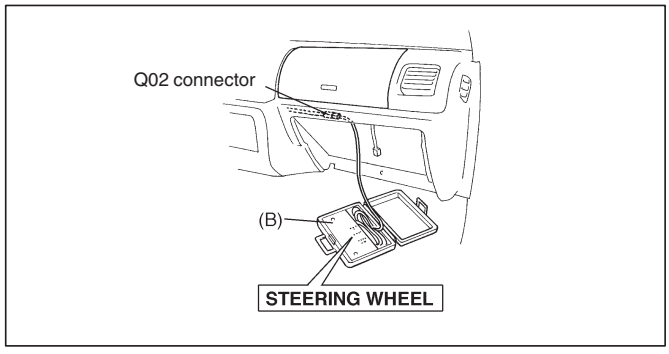

Fig. for STEP 3

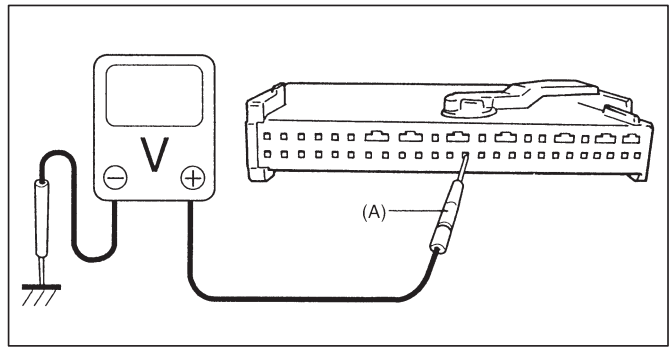

Special Tool
(A): 09932-76010
(B): 09932-75010

NOTE:
Upon completion of inspection and repair work, perform following items.
1) Reconnect all air bag system components, ensure all components are properly mounted.
2) Clear diagnostic trouble codes (Refer to “Diagnostic Trouble Code (DTC) Clearance”), if any.
3) Repeat “Air Bag Diagnostic System Check” in this section to confirm that the trouble has been corrected.

DTC 21 – DRIVER AIR BAG INITIATOR CIRCUIT RESISTANCE HIGH
DTC 22 – DRIVER AIR BAG INITIATOR CIRCUIT RESISTANCE LOW
DTC 24 – DRIVER AIR BAG INITIATOR CIRCUIT SHORT TO GROUND
DTC 25 – DRIVER AIR BAG INITIATOR CIRCUIT SHORT TO POWER CIRCUIT

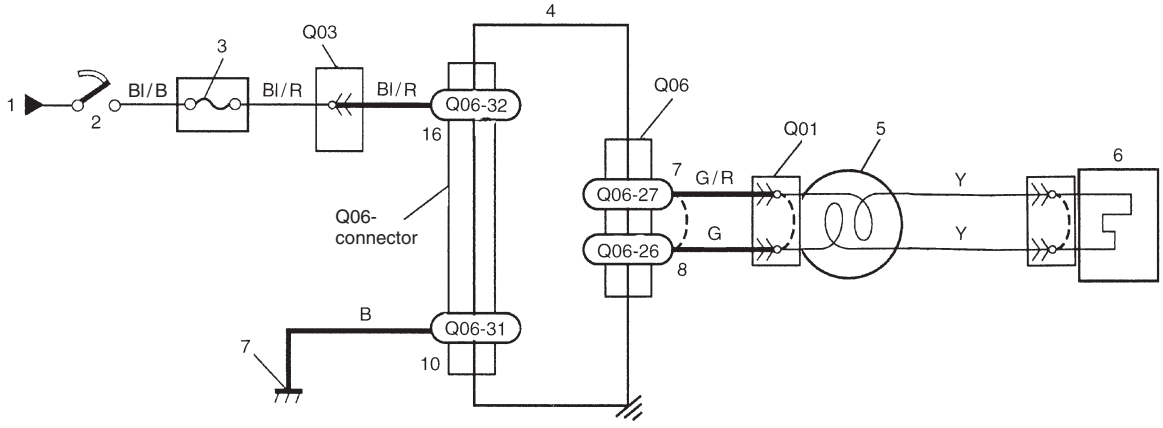

1. From main fuse
2. Ignition switch
3. "AIR BAG" fuse in circuit fuse box
4. SDM
5. Contact coil assembly
6. Driver air bag (inflator) module
7. Ground for air bag system

CAUTION:

- **When measurement of resistance or voltage is required in this table, use a special digital multimeter (refer to SPECIAL TOOLS in this section) along with a correct terminal adapter from special tool (Connector test adapter kit).**
- **When a check for proper connection is required, refer to "Intermittent and Poor Connections" in this section.**
- **If there is open circuit in the air bag wire harness, connector or terminal is found damaged, replace the wire harness, connector and terminal as an assembly.**

DTC WILL SET WHEN:

DTC 21: The combined resistance of the driver air bag (inflator) module, contact coil assembly, harness wiring and connector terminal contact is above a specified value for specified time.

DTC 22: The combined resistance of the driver air bag (inflator) module, contact coil assembly, harness wiring and connector terminal contact is below a specified value for specified time.

DTC 24: The voltage measured at driver air bag initiator circuit is below a specified value for specified time.

DTC 25: The voltage measured at driver air bag initiator circuit is above a specified value for specified time.

DIAGNOSTIC FLOW TABLE
DTC 21: DRIVER AIR BAG INITIATOR CIRCUIT RESISTANCE HIGH

STEP	ACTION	YES	NO
1	Was item “AIR BAG SYSTEM CHECK FLOW TABLE” described in this section performed?	Go to step 2.	Perform “AIR BAG SYSTEM CHECK FLOW TABLE” in this section.
2	1) With ignition switch OFF, disconnect contact coil connector located near the base of the steering column. 2) Check proper connection to contact coil at terminals in Q01 connector. 3) If OK then connect Special Tools to “G” terminal and “G/R” terminal of Q01 connector. (See figure below.) With ignition switch ON, is DTC 21 current?	Go to step 3.	Go to step 4.
3	1) With ignition switch OFF, disconnect SDM connector. 2) Check proper connection to SDM at terminals Q06-26 and Q06-27. 3) Release shorting bar in SDM connector by inserting Special Tool (A). (See figure below.) 4) If OK then measure resistance between Q06-26 and Q06-27 terminals with connected Special Tools. Is resistance 5.1 Ω or less?	Substitute a known-good SDM and recheck.	Repair high resistance or open in “G” or “G/R” wire circuit.
4	1) With ignition switch OFF, disconnect Special Tools then reconnect contact coil connector located near the base of the steering column. 2) Remove driver air bag (inflator) module from steering wheel (Refer to SECTION 3C). 3) Check proper connection to driver air bag (inflator) module at terminals. 4) If OK then connect Special Tools to driver air bag (inflator) module connector. With ignition switch ON, is DTC 21 current?	1) Ignition switch OFF. 2) Replace contact coil assembly (Refer to SECTION 3C).	1) Ignition switch OFF. 2) Replace driver air bag (inflator) module (Refer to SECTION 3C).

Fig. for STEP 2 and 3

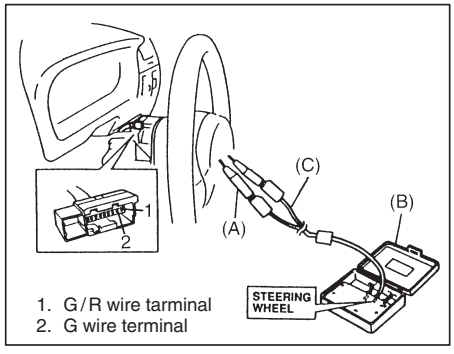

Fig. for STEP 3

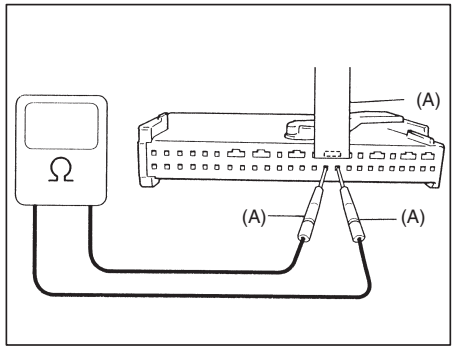

Fig. for STEP 4

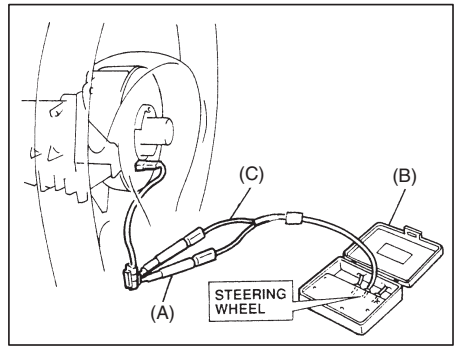

Special Tool
(A): 09932-76010
(B): 09932-75010
(C): 09932-78310

NOTE:
Upon completion of inspection and repair work, perform following items.
1) Reconnect all air bag system components, ensure all components are properly mounted.
2) Clear diagnostic trouble codes (Refer to “Diagnostic Trouble Code (DTC) Clearance”), if any.
3) Repeat “Air Bag Diagnostic System Check” in this section to confirm that the trouble has been corrected.

DTC 22: DRIVER AIR BAG INITIATOR CIRCUIT RESISTANCE LOW

STEP	ACTION	YES	NO
1	Was item “AIR BAG SYSTEM CHECK FLOW TABLE” described in this section performed?	Go to step 2.	Perform “AIR BAG SYSTEM CHECK FLOW TABLE” in this section.
2	1) With ignition switch OFF, disconnect contact coil connector located near the base of the steering column. 2) Check proper connection to contact coil at terminals in Q01 connector. 3) If OK then connect Special Tools to “G” terminal and “G/R” terminal of Q01 connector. (See figure below.) With ignition switch ON, is DTC 22 current?	Go to step 3.	Go to step 4.
3	1) With ignition switch OFF, disconnect SDM connector. 2) Check proper connection to SDM at terminals Q06-26 and Q06-27. 3) Release shorting bar in SDM connector by inserting Special Tool (A). Refer to the figure below. 4) If OK then measure resistance between terminals Q06-26 and Q06-27 with connected Special Tools. Is resistance 1.8 Ω or more?	Substitute a known-good SDM and recheck.	Repair short from “G” wire circuit to “G/R” wire circuit or from “G” other “G/R” wire circuit to other wire circuit.
4	1) With ignition switch OFF, disconnect Special Tool (B) then reconnect contact coil connector located near the base of the steering column. 2) Remove driver air bag (inflator) module from steering wheel (Refer to SECTION 3C). 3) Check proper connection to driver air bag (inflator) module at terminals. 4) If OK then connect Special Tools to driver air bag (inflator) module. (See figure below.) With ignition switch ON, is DTC 22 current?	1) Ignition switch OFF. 2) Replace contact coil assembly (Refer to SECTION 3C).	1) Ignition switch OFF. 2) Replace driver air bag (inflator) module (Refer to SECTION 3C).

Fig. for STEP 2 and 3

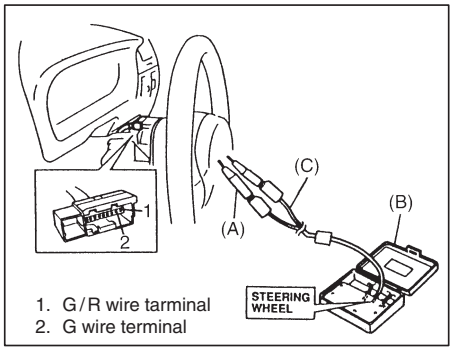

Fig. for STEP 3

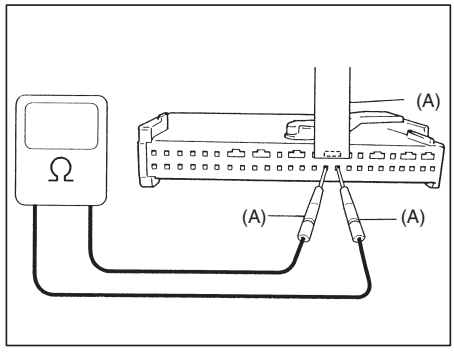

Fig. for STEP 4

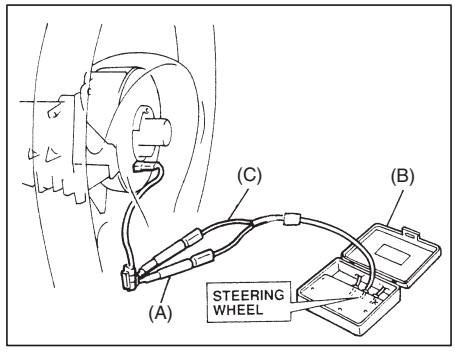

Special Tool
(A): 09932-76010
(B): 09932-75010
(C): 09932-78310

NOTE:
Upon completion of inspection and repair work, perform following items.
1) Reconnect all air bag system components, ensure all components are properly mounted.
2) Clear diagnostic trouble codes (Refer to “Diagnostic Trouble Code (DTC) Clearance”), if any.
3) Repeat “Air Bag Diagnostic System Check” in this section to confirm that the trouble has been corrected.

DTC 24: DRIVER AIR BAG INITIATOR CIRCUIT SHORT TO GROUND

STEP	ACTION	YES	NO
1	Was item “AIR BAG SYSTEM CHECK FLOW TABLE” described in this section performed?	Go to step 2.	Perform “AIR BAG SYSTEM CHECK FLOW TABLE” in this section.
2	1) With ignition switch OFF, disconnect contact coil connector located near the base of the steering column. 2) Check proper connection to contact coil at terminals in Q01 connector. 3) If OK then connect Special Tools to “G” terminal and “G/R” terminal of Q01 connector. (See figure below.) With ignition switch ON, is DTC 24 current?	Go to step 3.	Go to step 4.
3	1) With ignition switch OFF, disconnect Special Tools and SDM connector. 2) Check continuity between terminals Q06-26 and Q06-31. (See figure below.) Is there continuity?	Repair short from “G” or “G/R” wire circuit to ground.	Substitute a known-good SDM and recheck.
4	1) With ignition switch OFF, disconnect Special Tools then reconnect contact coil connector located near the base of the steering column. 2) Remove driver air bag (inflator) module from steering wheel (Refer to SECTION 3C). 3) Check proper connection to driver air bag (inflator) module at terminals. 4) If OK then connect Special Tools to driver air bag (inflator) module connector. (See figure below.) With ignition switch ON, is DTC 24 current?	1) Ignition switch OFF. 2) Replace contact coil assembly (Refer to SECTION 3C).	1) Ignition switch OFF. 2) Replace driver air bag (inflator) module (Refer to SECTION 3C).

Fig. for STEP 2

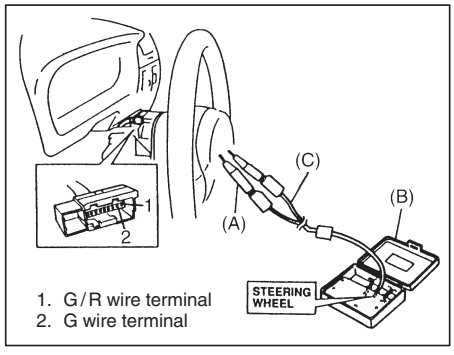

Fig. for STEP 3

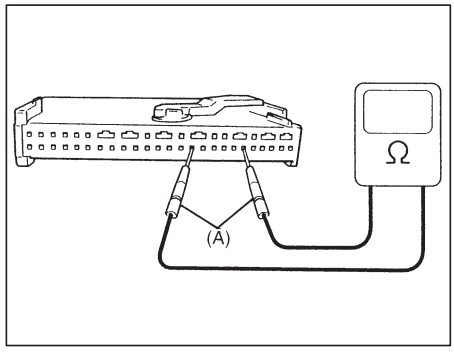

Fig. for STEP 4

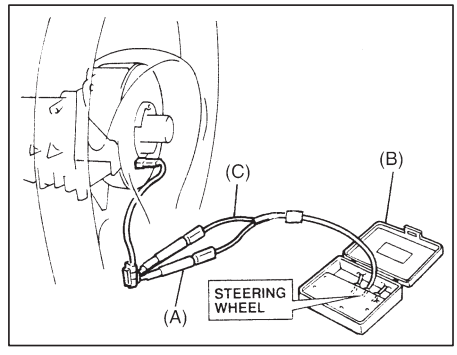

Special Tool
(A): 09932-76010
(B): 09932-75010
(C): 09932-78310

NOTE:
Upon completion of inspection and repair work, perform following items.
1) Reconnect all air bag system components, ensure all components are properly mounted.
2) Clear diagnostic trouble codes (Refer to “Diagnostic Trouble Code (DTC) Clearance”), if any.
3) Repeat “Air Bag Diagnostic System Check” in this section to confirm that the trouble has been corrected.

DTC 25: DRIVER AIR BAG INITIATOR CIRCUIT SHORT TO POWER CIRCUIT

STEP	ACTION	YES	NO
1	Was item “AIR BAG SYSTEM CHECK FLOW TABLE” described in this section performed?	Go to step 2.	Perform “AIR BAG SYSTEM CHECK FLOW TABLE” in this section.
2	1) With ignition switch OFF, disconnect contact coil connector located near the base of the steering column. 2) Check proper connection to contact coil at terminals in Q01 connector. 3) If OK then connect Special Tools to “G” terminal and “G/R” terminal of Q01 connector. (See figure below.) With ignition switch ON, is DTC 25 current?	Go to step 3.	Go to step 4.
3	1) With ignition switch OFF, disconnect Special Tools and SDM connector. 2) Measure voltage from Q06-27 terminal to body ground. (See figure below.) With ignition switch ON, is voltage 1 V or less?	Substitute a known-good SDM and recheck.	Repair short from “G” or “G/R” wire circuit to power circuit.
4	1) With ignition switch OFF, disconnect Special Tools then reconnect contact coil connector located near the base of the steering column. 2) Remove driver air bag (inflator) module from steering wheel (Refer to SECTION 3C). 3) Check proper connection to driver air bag (inflator) module at terminals. 4) If OK then connect Special Tools to driver air bag (inflator) module connector. (See figure below.) With ignition switch ON, is DTC 25 current?	1) Ignition switch OFF. 2) Replace contact coil assembly (Refer to SECTION 3C).	1) Ignition switch OFF. 2) Replace driver air bag (inflator) module (Refer to SECTION 3C).

Fig. for STEP 2

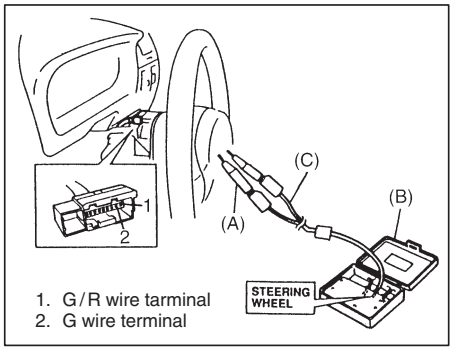

Fig. for STEP 3

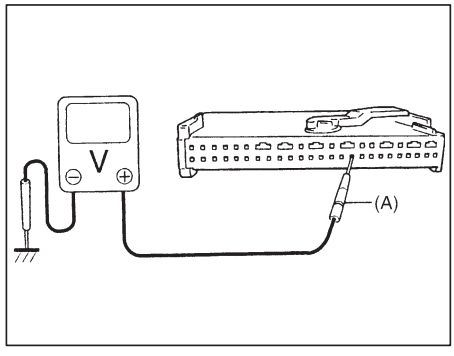

Fig. for STEP 4

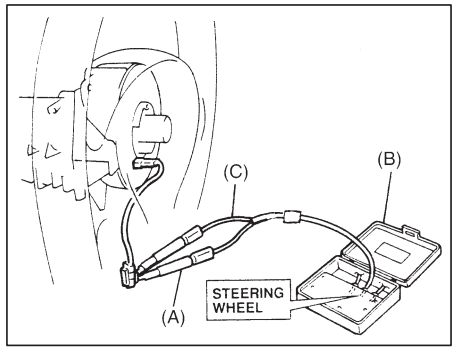

Special Tool
(A): 09932-76010
(B): 09932-75010
(C): 09932-78310

NOTE:
Upon completion of inspection and repair work, perform following items.
1) Reconnect all air bag system components, ensure all components are properly mounted.
2) Clear diagnostic trouble codes (Refer to “Diagnostic Trouble Code (DTC) Clearance”), if any.
3) Repeat “Air Bag Diagnostic System Check” in this section to confirm that the trouble has been corrected.

DTC 31 – POWER SOURCE VOLTAGE HIGH
DTC 32 – POWER SOURCE VOLTAGE LOW

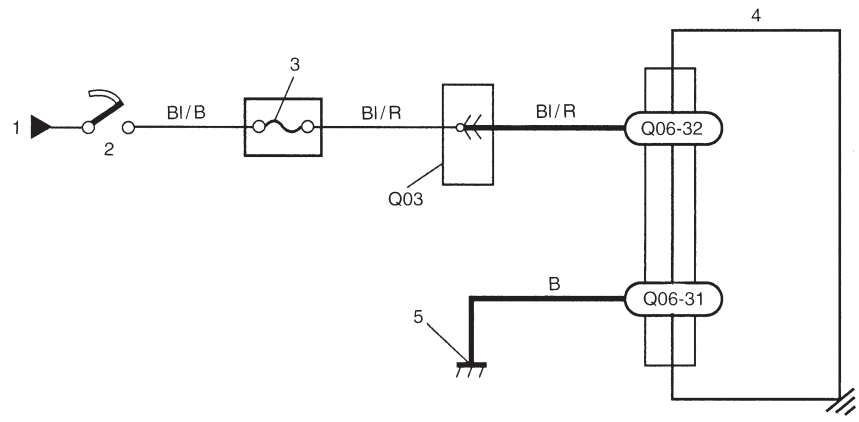

1. From main fuse
2. Ignition switch
3. "AIR BAG" fuse in circuit fuse box
4. SDM
5. Ground for air bag system

: Air bag harness

CAUTION:
- **When measurement of resistance or voltage is required in this table, use a special digital multimeter (refer to SPECIAL TOOLS in this section) along with a correct terminal adapter from special tool (Connector test adapter kit).**
- **When a check for proper connection is required, refer to "Intermittent and Poor Connections" in this section.**
- **If there is open circuit in the air bag wire harness, connector or terminal is found damaged, replace the wire harness, connector and terminal as an assembly.**

DTC WILL SET WHEN:
DTC 31: The power source voltage to SDM is above specified value for specified time.
DTC 32: The power source voltage is below an approx. 8 V for specified time.

DIAGNOSTIC FLOW TABLE

DTC 31: POWER SOURCE VOLTAGE HIGH

STEP	ACTION	YES	NO
1	Was item “AIR BAG SYSTEM CHECK FLOW TABLE” described in this section performed?	Go to step 2.	Perform “AIR BAG SYSTEM CHECK FLOW TABLE” in this section.
2	1) With ignition switch OFF, disconnect SDM connector. 2) Check proper connection to SDM at Q06-32 terminal. 3) If OK then ignition switch ON, and then check voltage from Q06-32 terminal on SDM harness connector to body ground. (See figure below.) Is voltage 10 V or less?	Go to step 3.	Check Charging System and repair as necessary. (Refer to SECTION 6H “Charging System”)
3	1) With ignition switch OFF, reconnect SDM connector. With ignition switch ON, is DTC 31 current?	Substitute a known-good SDM and recheck.	Check Charging System and repair as necessary. (Refer to SECTION 6H “Charging System”)

Fig. for STEP 2

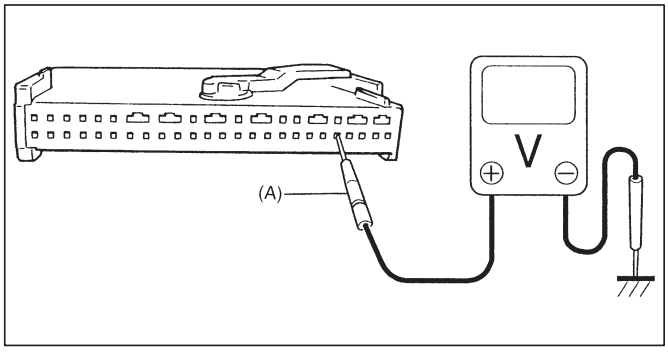

Special Tool
(A): 09932-76010

NOTE:
Upon completion of inspection and repair work, perform following items.
1) Reconnect all air bag system components, ensure all components are properly mounted.
2) Clear diagnostic trouble codes (Refer to “Diagnostic Trouble Code (DTC) Clearance”), if any.
3) Repeat “Air Bag Diagnostic System Check” in this section to confirm that the trouble has been corrected.

DTC 32: POWER SOURCE CIRCUIT LOW

STEP	ACTION	YES	NO
1	Was item “AIR BAG SYSTEM CHECK FLOW TABLE” described in this section performed?	Go to step 2.	Perform “AIR BAG SYSTEM CHECK FLOW TABLE” in this section.
2	1) Measure voltage on battery. 2) Is voltage 11 V or more?	Go to step 3.	Check Charging System and repair as necessary. (Refer to SECTION 6H “Charging System”)
3	1) With ignition switch OFF, disconnect SDM connector. 2) Check proper connection to SDM at Q06-32 terminal. 3) If OK then ignition switch ON, and then check voltage from Q06-32 terminal on SDM connector to body ground. (See figure below.) Is voltage 8 V or more?	Go to step 5.	Go to step 4.
4	1) With ignition switch OFF, disconnect Q03 connector. 2) Check proper connection at “Bl/R” wire terminal in Q03 connector. 3) If OK then ignition switch ON, and then check voltage from “Bl/R” wire terminal in Q03 connector on instrument panel harness to body ground. Is voltage 8 V or more?	Repair poor connection, high resistance in “Bl/R” or “Bl/B” circuit of air bag harness or “AIR BAG” fuse.	Possibly faulty points are as follows. Check each of them and repair as necessary. ● Circuit from battery to Q03 connector ● Charging System (Refer to SECTION 6H “Charging System”)
5	1) With ignition switch OFF, reconnect SDM connector. 2) With ignition switch ON, is DTC 32 current?	Substitute a known-good SDM and recheck.	Check Charging System and repair as necessary. (Refer to SECTION 6H “Charging System”)

Fig. for STEP 3

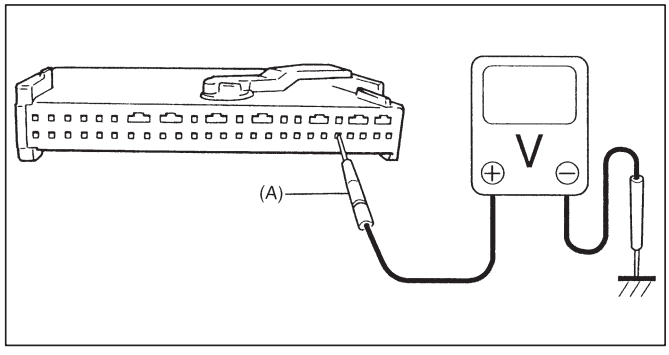

Fig. for STEP 4

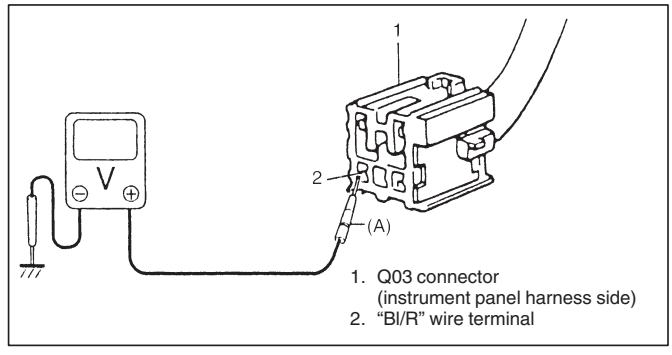

Special Tool
(A): 09932-76010

NOTE:
Upon completion of inspection and repair work, perform following items.
1) Reconnect all air bag system components, ensure all components are properly mounted.
2) Clear diagnostic trouble codes (Refer to “Diagnostic Trouble Code (DTC) Clearance”), if any.
3) Repeat “Air Bag Diagnostic System Check” in this section to confirm that the trouble has been corrected.

DTC 41 – DRIVER PRETENSIONER INITIATOR CIRCUIT RESISTANCE HIGH
DTC 42 – DRIVER PRETENSIONER INITIATOR CIRCUIT RESISTANCE LOW
DTC 43 – DRIVER PRETENSIONER INITIATOR CIRCUIT SHORT TO GROUND
DTC 44 – DRIVER PRETENSIONER INITIATOR CIRCUIT SHORT TO POWER CIRCUIT
DTC 45 – PASSENGER PRETENSIONER INITIATOR CIRCUIT RESISTANCE HIGH
DTC 46 – PASSENGER PRETENSIONER INITIATOR CIRCUIT RESISTANCE LOW
DTC 47 – PASSENGER PRETENSIONER INITIATOR CIRCUIT SHORT TO GROUND
DTC 48 – PASSENGER PRETENSIONER INITIATOR CIRCUIT SHORT TO POWER CIRCUIT

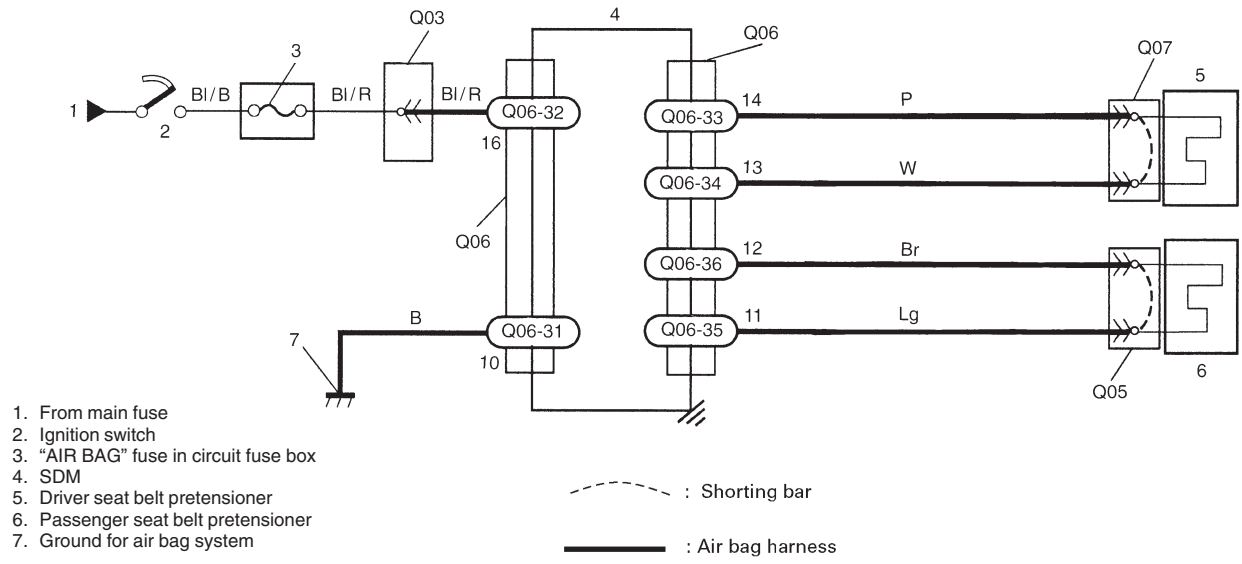

CAUTION:
- **When measurement of resistance or voltage is required in this table, use a special digital multimeter (refer to SPECIAL TOOLS in this section) along with a correct terminal adapter from special tool (Connector test adapter kit).**
- **When a check for proper connection is required, refer to "Intermittent and Poor Connections" in this section.**
- **If there is open circuit in the air bag wire harness, connector or terminal is found damaged, replace the wire harness, connector and terminal as an assembly.**

DTC WILL SET WHEN:

DTC 41 and 45: The resistance of driver or passenger seat belt pretensioner initiator circuit is above a specified value for specified time.

DTC 42 and 46: The resistance of driver or passenger seat belt pretensioner initiator circuit is below a specified value for specified time.

DTC 43 and 47: The voltage measured at driver or passenger seat belt pretensioner initiator circuit is below a specified value for specified time.

DTC 44 and 48: The voltage measured at driver or passenger seat belt pretensioner initiator circuit is above a specified value for specified time.

DIAGNOSTIC FLOW TABLE

DTC 41: DRIVER PRETENSIONER INITIATOR CIRCUIT RESISTANCE HIGH

DTC 45: PASSENGER PRETENSIONER INITIATOR CIRCUIT RESISTANCE HIGH

STEP	ACTION	YES	NO
1	Was item “AIR BAG SYSTEM CHECK FLOW TABLE” described in this section performed?	Go to step 2.	Perform “AIR BAG SYSTEM CHECK FLOW TABLE” in this section.
2	1) With ignition switch OFF, remove center pillar inner garnish of applicable side then disconnect seat belt pretensioner connector. 2) Check proper connection to applicable seat belt pretensioner at terminals in Q07 or Q05 connector. 3) If OK then connect Special Tools to seat belt pretensioner connector disconnected at 1). (See figure below.) With ignition switch ON, is DTC 41 or 45 still current?	Go to step 3.	1) Ignition switch OFF. 2) Replace seat belt pretensioner (Refer to SECTION 10A).
3	1) With ignition switch OFF, disconnect SDM connector. 2) Check proper connection to SDM at terminals Q06-33 and Q06-34 or Q06-35 and Q06-36. 3) If OK then measure resistance between Q06-33 and Q06-34 terminals or Q06-35 and Q06-36 terminals with Special Tools connected. (See figure below.) Is resistance 4.1 Ω or less?	Substitute a known-good SDM and recheck.	**DTC41:** Repair high resistance or open in “P” or “W” wire circuit. **DTC45:** Repair high resistance or open in “Lg” or “Br” wire circuit.

Fig. for STEP 2 and 3

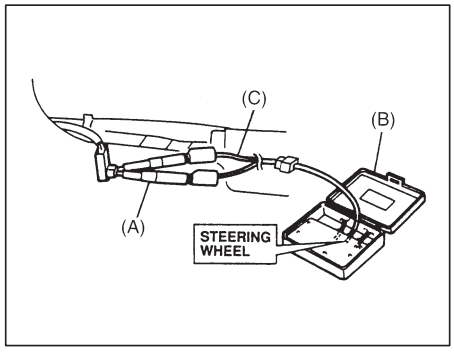

Fig. for STEP 3

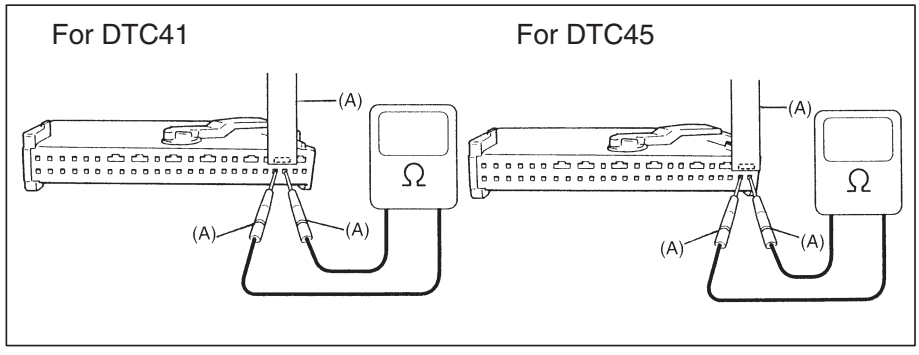

Special Tool
(A): 09932-76010
(B): 09932-75010
(C): 09932-78310

NOTE:
Upon completion of inspection and repair work, perform following items.
1) Reconnect all air bag system components, ensure all components are properly mounted.
2) Clear diagnostic trouble codes (Refer to “Diagnostic Trouble Code (DTC) Clearance”), if any.
3) Repeat “Air Bag Diagnostic System Check” in this section to confirm that the trouble has been corrected.

DTC 42: DRIVER PRETENSIONER INITIATOR CIRCUIT RESISTANCE LOW
DTC 46: PASSENGER PRETENSIONER INITIATOR CIRCUIT RESISTANCE LOW

STEP	ACTION	YES	NO
1	Was item “AIR BAG SYSTEM CHECK FLOW TABLE” described in this section performed?	Go to step 2.	Perform “AIR BAG SYSTEM CHECK FLOW TABLE” in this section.
2	1) With ignition switch OFF, remove center pillar inner garnish of applicable side then disconnect seat belt pretensioner connector. 2) Check proper connection to applicable seat belt pretensioner at terminals in Q07 or Q05 connector. 3) If OK then connect Special Tools to seat belt pretensioner connector disconnected at 1). (See figure below.) 4) With ignition switch ON, is DTC 42 or 46 still current?	Go to step 3.	1) Ignition switch OFF. 2) Replace seat belt pretensioner (Refer to SECTION 10A).
3	1) With ignition switch OFF, disconnect SDM connector. 2) Check proper connection to SDM at terminals Q06-33 and Q06-34 or Q06-35 and Q06-36. 3) If OK then measure resistance between Q06-33 and Q06-34 terminals or Q06-35 and Q06-36 terminals with connected Special Tools. 4) Is resistance 1.3 Ω or more?	Substitute a known-good SDM and recheck.	**DTC42:** Repair short from “P” wire circuit to “W” wire circuit or from “P” or “W” wire circuit to other wire circuit. **DTC46:** Repair short from “Lg” wire circuit to “Br” wire circuit or from “Lg” or “Br” wire circuit to other wire circuit.

Fig. for STEP 2 and 3

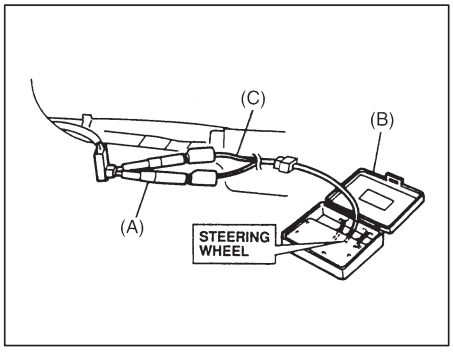

Fig. for STEP 3

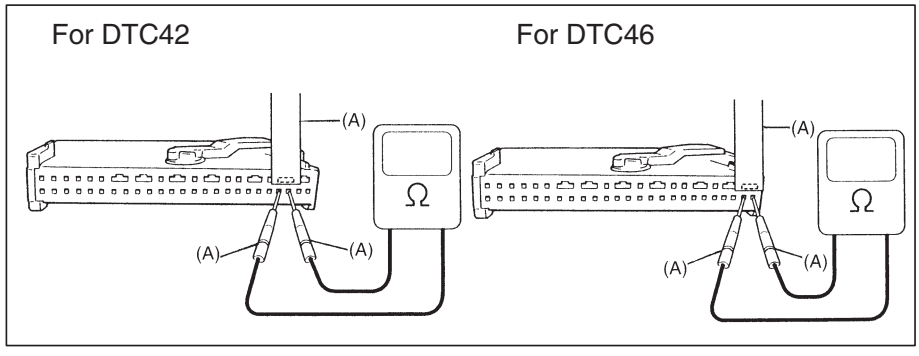

Special Tool
(A): 09932-76010
(B): 09932-75010
(C): 09932-78310

NOTE:
Upon completion of inspection and repair work, perform following items.
1) Reconnect all air bag system components, ensure all components are properly mounted.
2) Clear diagnostic trouble codes (Refer to “Diagnostic Trouble Code (DTC) Clearance”), if any.
3) Repeat “Air Bag Diagnostic System Check” in this section to confirm that the trouble has been corrected.

DTC 43: DRIVER PRETENSIONER INITIATOR CIRCUIT SHORT TO GROUND
DTC 47: PASSENGER PRETENSIONER INITIATOR CIRCUIT SHORT TO GROUND

STEP	ACTION	YES	NO
1	Was item “AIR BAG SYSTEM CHECK FLOW TABLE” described in this section performed?	Go to step 2.	Perform “AIR BAG SYSTEM CHECK FLOW TABLE” in this section.
2	1) With ignition switch OFF, remove center pillar inner garnish of applicable side then disconnect seat belt pretensioner connector. 2) Check proper connection to applicable seat belt pretensioner at terminals in Q07 or Q05 connector. 3) If OK then connect Special Tools to seat belt pretensioner connector disconnected at 1). (See figure below.) With ignition switch ON, is DTC 43 or 47 still current?	Go to step 3.	1) Ignition switch OFF. 2) Replace seat belt pretensioner (Refer to SECTION 10A).
3	1) With ignition switch OFF, disconnect Special Tools and SDM connector. 2) Check continuity between Q06-33 or Q06-35 and Q06-31 terminals. Is there continuity?	**DTC43:** Repair short “P” or “W” wire circuit to ground. **DTC47:** Repair short from “Lg” or “Br” wire circuit to ground.	Substitute a known-good SDM and recheck.

Fig. for STEP 2 and 3

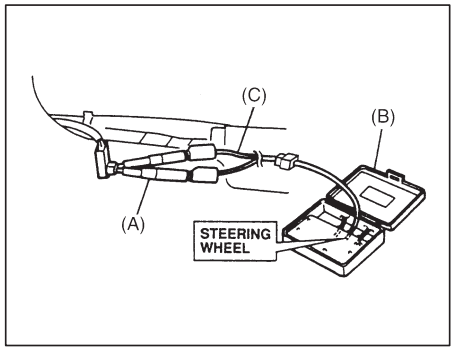

Fig. for STEP 3

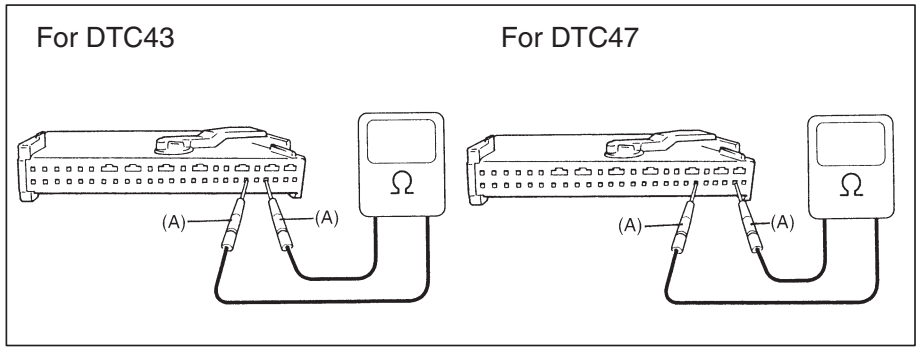

Special Tool
(A): 09932-76010
(B): 09932-75010
(C): 09932-78310

NOTE:
Upon completion of inspection and repair work, perform following items.
1) Reconnect all air bag system components, ensure all components are properly mounted.
2) Clear diagnostic trouble codes (Refer to “Diagnostic Trouble Code (DTC) Clearance”), if any.
3) Repeat “Air Bag Diagnostic System Check” in this section to confirm that the trouble has been corrected.

DTC 44: DRIVER PRETENSIONER INITIATOR CIRCUIT SHORT TO POWER CIRCUIT
DTC 48: PASSENGER PRETENSIONER INITIATOR CIRCUIT SHORT TO POWER CIRCUIT

STEP	ACTION	YES	NO
1	Was item “AIR BAG SYSTEM CHECK FLOW TABLE” described in this section performed?	Go to step 2.	Perform “AIR BAG SYSTEM CHECK FLOW TABLE” in this section.
2	1) With ignition switch OFF, remove center pillar inner garnish of applicable side then disconnect seat belt pretensioner connector. 2) Check proper connection to applicable seat belt pretensioner at terminals in Q07 or Q05 connector. 3) If OK then connect Special Tools to seat belt pretensioner connector disconnected at 1). (See figure below.) With ignition switch ON, is DTC 44 or 48 still current?	Go to step 3.	1) Ignition switch OFF. 2) Replace seat belt pretensioner (Refer to SECTION 10A).
3	1) With ignition switch OFF, disconnect Special Tools and SDM. 2) Measure voltage from Q06-34 or Q06-36 terminal to body ground. With ignition switch ON, is voltage 1 V or less?	Substitute a known-good SDM and recheck.	**DTC44:** Repair short “P” or “W” wire circuit to power circuit. **DTC48:** Repair short from “Lg” or “Br” wire circuit to power circuit.

Fig. for STEP 2 and 3

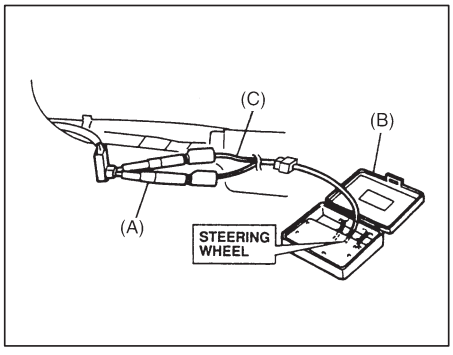

Fig. for STEP 3

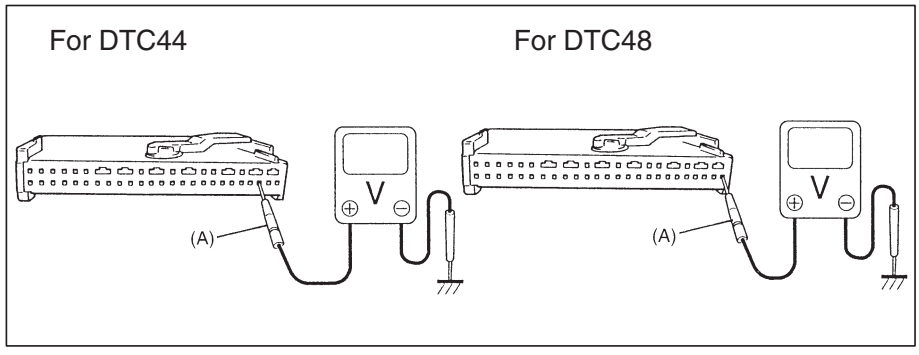

Special Tool
(A): 09932-76010
(B): 09932-75010
(C): 09932-78310

NOTE:
Upon completion of inspection and repair work, perform following items.
1) Reconnect all air bag system components, ensure all components are properly mounted.
2) Clear diagnostic trouble codes (Refer to “Diagnostic Trouble Code (DTC) Clearance”), if any.
3) Repeat “Air Bag Diagnostic System Check” in this section to confirm that the trouble has been corrected.

CODE 51 – FRONTAL CRASH DETECTED (SYSTEM ACTIVATION COMMAND OUTPUTTED)

DTC WILL SET WHEN:

The SDM detects a frontal crash of sufficient force to warrant activation of the air bag system. (SDM outputs a deployment/activation command.)

DIAGNOSTIC FLOW TABLE

NOTE:

Before executing items in this table, be sure to perform "Air Bag Diagnostic System Check".

STEP	ACTION	YES	NO
1	1) Ignition switch OFF. Has air bag system deployed?	Replace components and perform inspections as directed in "Repairs and Inspections Required After an Accident" in this section.	Go to step 2.
2	1) Inspect front of vehicle and undercarriage for signs of impact. Are there signs of impact?	Replace components and perform inspections as directed in "Repairs and Inspections Required After an Accident" in this section.	Replace SDM.

NOTE:

Upon completion of inspection and repair work, perform following items.

1) **Reconnect all air bag system components, ensure all components are properly mounted.**
2) **Repeat "Air Bag Diagnostic System Check" in this section to confirm that the trouble has been corrected.**

DTC61 – AIR BAG WARNING LAMP CIRCUIT FAILURE

CAUTION:

- **When measurement of resistance or voltage is required in this table, use a special digital multimeter (refer to SPECIAL TOOLS in this section) along with a correct terminal adapter from special tool (Connector test adapter kit).**
- **When a check for proper connection is required, refer to "Intermittent and Poor Connections" in this section.**
- **If there is open circuit in the air bag wire harness, connector or terminal is found damaged, replace the wire harness, connector and terminal as an assembly.**

DTC WILL SET WHEN

The voltage at the air bag warning lamp circuit terminal (Q06-30) does not watch the commanded state of the warning lamp driver for specified time.

STEP	ACTION	YES	NO
1	1) This DTC is set when there is a trouble in air bag warning lamp circuit. Failure to properly perform "Air Bag Diagnostic System Check Flow Table" may also result in misdiagnosis. Therefore, check air bag warning lamp circuit again according to "Air Bag Diagnostic System Check Flow Table". 2) Is "Air Bag" warning lamp circuit in good condition?	Go to step 2.	Repair "AIR BAG" warning lamp circuit.
2	1) Clear diagnostic trouble codes. 2) Is DTC 61 set?	Substitute a known-good SDM and recheck.	Recheck air bag system. referring to "Air Bag Diagnostic System Check Flow Table".

NOTE:

Upon completion of inspection and repair work, perform following items.

1) **Reconnect all air bag system components, ensure all components are properly mounted.**
2) **Repeat "Air Bag Diagnostic System Check Flow Table", referring to p. 10B-11 to confirm that the trouble has been corrected.**

CODE 71 – INTERNAL SDM FAULT

DTC WILL SET WHEN:

An internal SDM fault is detected by SDM.

NOTE:

Before executing items below, be sure to perform "Air Bag Diagnostic System Check".

NOTE:

CODE 71 can never be cleared once it has been set.

1) Ignition switch OFF.
2) Replace SDM.
3) Repeat "Air Bag Diagnostic System Check" in this section.

REPAIRS AND INSPECTIONS REQUIRED AFTER AN ACCIDENT

CAUTION:

- **All air bag system components, including the electrical harness (component mounting points), must be inspected after an accident. If any components are damaged or bent, they must be replaced even if air bag system activation did not occur.**
- **Never use air bag system parts from another vehicle.**
- **Do not attempt to service the parts below. Service of these parts is by replacement only.**
  - **Driver/Passenger air bag (inflator) module, Driver/Passenger seat belt pretensioner (if equipped)**
  - **SDM**
  - **Contact coil**
  - **Air bag wire harness**
- **Proper operation of the sensors and air bag system requires that any repairs to the vehicle structure return it to its original production configuration.**

CAUTION:

After detecting one time of such collision as to meet deployment conditions, the SDM must not be used. Refer to "Air Bag Diagnostic System Check" when checking the SDM.

ACCIDENT WITH DEPLOYMENT/ACTIVATION – COMPONENT REPLACEMENT

The following components must be replaced.

- Driver and passenger (if equipped) air bag (inflator) modules
- Driver and passenger seat belt pretensioners
- SDM

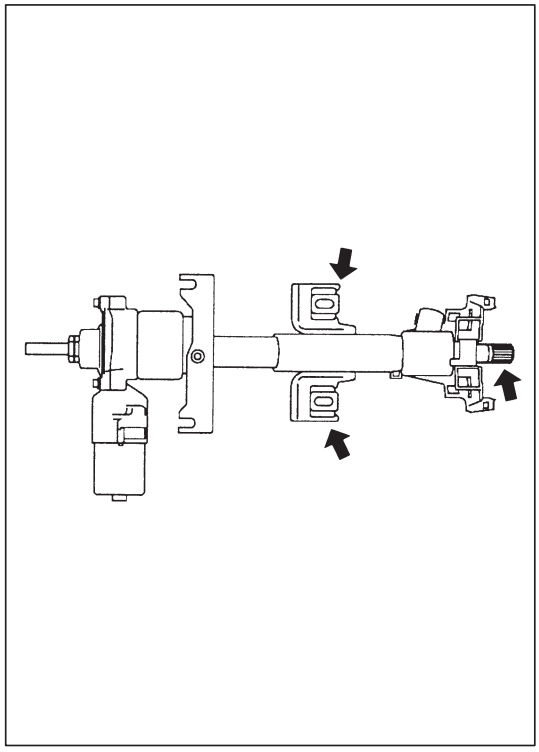

ACCIDENT WITH OR WITHOUT DEPLOYMENT/ ACTIVATION – COMPONENT INSPECTIONS

Certain air bag and restraint system components must be inspected after any crash, whether the air bag deployed or not.
Those components are:

- Steering column and shaft joints
  – Check for length, damage and bend according to “Checking Steering Column for Accident Damage” in SECTION 3C1.
  If any faulty condition is found in above checks, replace faulty part.
- Steering column bracket and capsules
  – Check for damage and bent.
  If any faulty condition is found in above checks, replace faulty part.

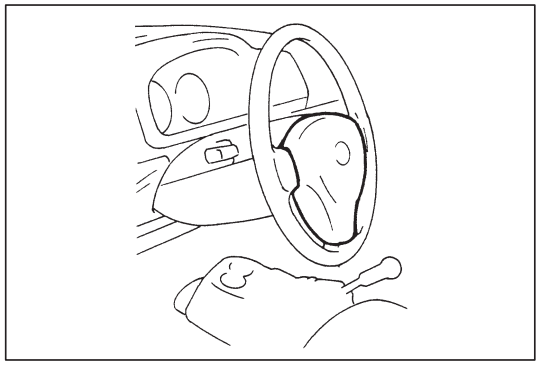

- Steering wheel and driver air bag (inflator) module
  – Check for damage or air bag (inflator) module fitness.
  – Check trim cover (pad surface) for cracks.
  – Check wire harness and connector for damage or tightness.
  If any faulty condition is found in above checks, replace faulty part.

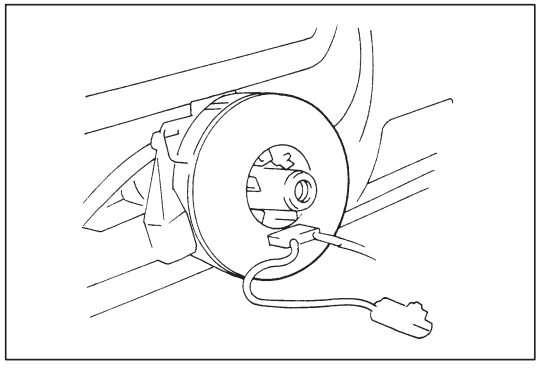

- Contact coil and combination switch assembly
  – Check wire harness and connectors for damage or tightness.
  – Check contact coil case for damage.
  If any faulty condition is found in above checks, replace.

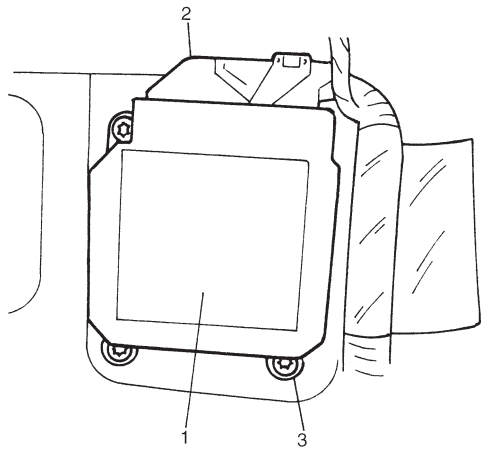

1. SDM
2. SDM connector
3. SDM bolts

- SDM
  - Check for external damage such as deformation, scratch, crack, peeled paint, etc.
  - Check that SDM cannot be installed properly due to a cause in itself.
  - Check that connector or lead wire of SDM has a scorching, melting or damage.
  - Check that connector is connected securely or locked.
  - Check SDM connector and terminals for tightness.
  - Check SDM sets a diagnostic trouble code (Refer to “DTC Check” in this section) and the diagnostic table leads to a malfunctioning SDM.

  If any faulty condition is found in above checks, replace.

- Instrument panel member and reinforcement
  - Check for any distortion, bending, cracking or other damage.

  If any faulty condition is found in above checks, replace.

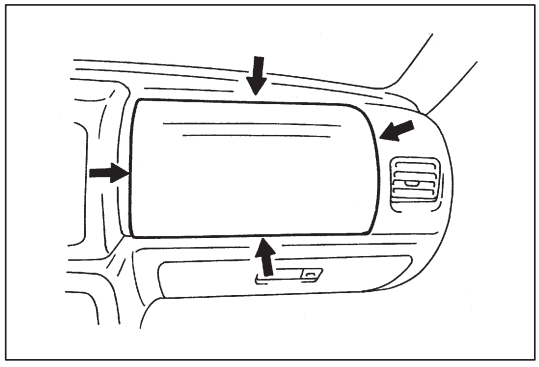

- Passenger air bag (inflator) module (if equipped)
  - Check for dents, cracks, damage or fitness.
  - Check trim cover for cracks or deformities.
  - Check harness and connector for damage or tightness.

  If any faulty condition is found in above checks, replace.

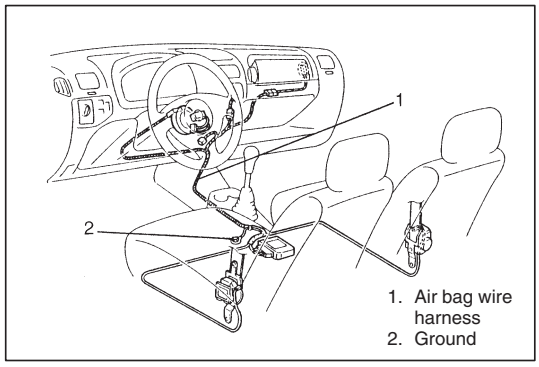

- Air bag wire harness and connections
  - Check for damages, deformities or poor connections. (Refer to “Intermittents and Poor Connections” in this section.)
  - Check wire harness clamps for tightness.

  If any faulty condition is found, correct or replace.

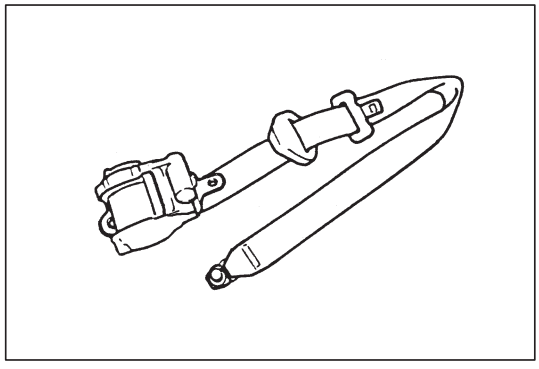

- Seat belt pretensioner
  - Check for dents, cracks, damage or fitness
  - Check harness and connector for damage or tightness.

  If any faulty condition is found in above checks, replace.

- Seat belts and mounting points
  - Refer to “Seat Belt” in SECTION 10A.
- Air bag warning lamp (air bag system)
  - After vehicle is completely repaired, perform “Air Bag Diagnostic System Check” under “Diagnosis” in this section.

ON-VEHICLE SERVICE

SERVICE PRECAUTIONS

SERVICE AND DIAGNOSIS

WARNING/CAUTION labels are attached on each part of air bag system components (SDM, air bag (inflator) modules and seat belt pretensioners). Be sure to follow the instructions.

WARNING:
- **If the air bag system and another vehicle system both need repair, Suzuki recommends that the air bag system be repaired first, to help avoid unintended air bag system activation.**
- **Do not modify the steering wheel, dashboard or any other air bag system components. Modifications can adversely affect air bag system performance and lead to injury.**
- **Failure to follow procedures could result in possible air bag system activation, personal injury or unneeded air bag system repairs.**

- Many of service procedures require disconnection of “AIR BAG” fuse and air bag (inflator) modules (driver and passenger) from initiator circuit to avoid an accidental deployment.
- Do not apply power to the air bag system unless all components are connected or a diagnostic chart requests it, as this will set a diagnostic trouble code.
- The “Air Bag Diagnostic System Check” must be the starting point of any air bag diagnostics. The “Air Bag Diagnostic System Check” will verify proper “AIR BAG” warning lamp operation and will lead you to the correct chart to diagnose any air bag malfunctions. Bypassing these procedures may result in extended diagnostic time, incorrect diagnosis, and incorrect parts replacements.
- Never use air bag component parts from another vehicle.
- If the vehicle will be exposed to temperatures over 93°C (200°F) (for example, during a paint baking process), remove the air bag system components beforehand to avoid component damage or unintended system activation.
- When servicing, if shocks may be applied (e.g., SDM and air bag (inflator) module (driver & passenger) is dropped from a height of 90 cm (3 ft) or more, seat belt pretensioner is (driver & passenger) from height of 30 cm (1 ft) or more.) to air bag system component parts, remove those parts beforehand.
- When using electric welding, be sure to disconnect air bag (inflator) module and seat belt pretensioner connectors (driver and passenger) respectively.
- When applying paint around the air bag system related parts, use care so that the harness or connector will not be exposed to the paint mist.
- Never expose air bag system component parts directly to hot air (drying or baking the vehicle after painting) or flames.

WARNING:
When performing service on or around air bag system components or air bag wiring, follow the procedures listed in the following pages to temporarily disable the air bag system.
Failure to follow procedures could result in possible air bag system activation, personal injury or unneeded air bag system repairs.

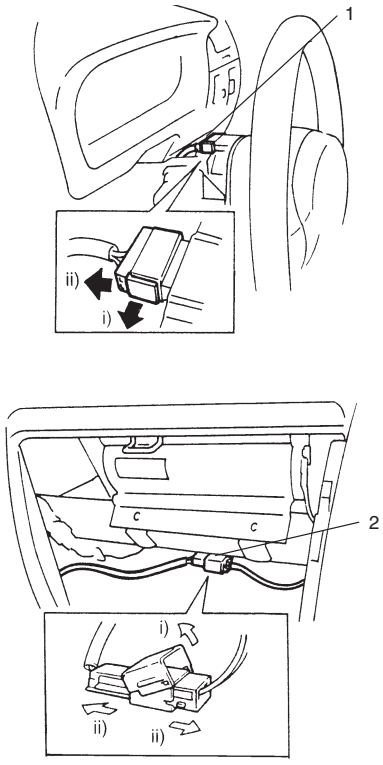

i) Release locking of lock lever.
ii) After unlocked, disconnect to connector.

DISABLING AIR BAG SYSTEM

1) Turn steering wheel so that vehicle's wheels (front tires) and pointing straight ahead.
2) Turn ignition switch to "LOCK" position and remove key.
3) Remove "AIR BAG" fuse from circuit fuse box. Refer to "System Components and Wiring Location View and Connectors" in this section for location of circuit fuse box.
4) Remove steering column upper and lower covers.
5) Disconnect connector (1) from contact coil assembly.
6) If equipped with passenger air bag (inflator) module, remove glove box and disconnect Yellow connector (2) of passenger air bag (inflator) module.

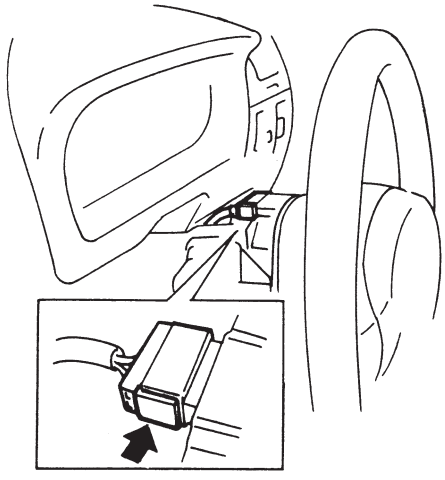

ENABLING AIR BAG SYSTEM

1) Turn ignition switch to steering locking position and remove key.
2) Connect Yellow harness connector to contact coil assembly and install steering column upper cover.

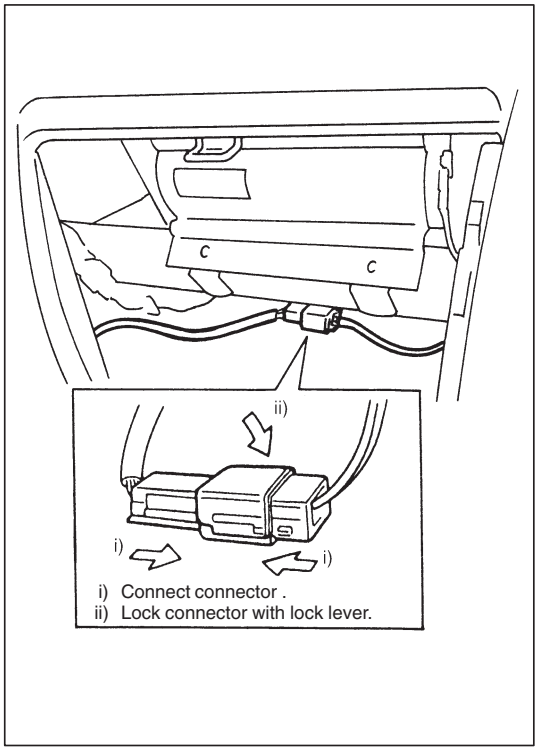

3) Connect Yellow connector of passenger air bag (inflator) module (if equipped), and be sure to lock connector with lock lever and close glove box panel.
4) Install “AIR BAG” fuse to circuit fuse box.
5) Turn ignition switch to “ON” and verify that air bag warning lamp flashes 6 times and then turns off.
   If it does not operate as described, perform “Air Bag Diagnostic System Check” in this section.

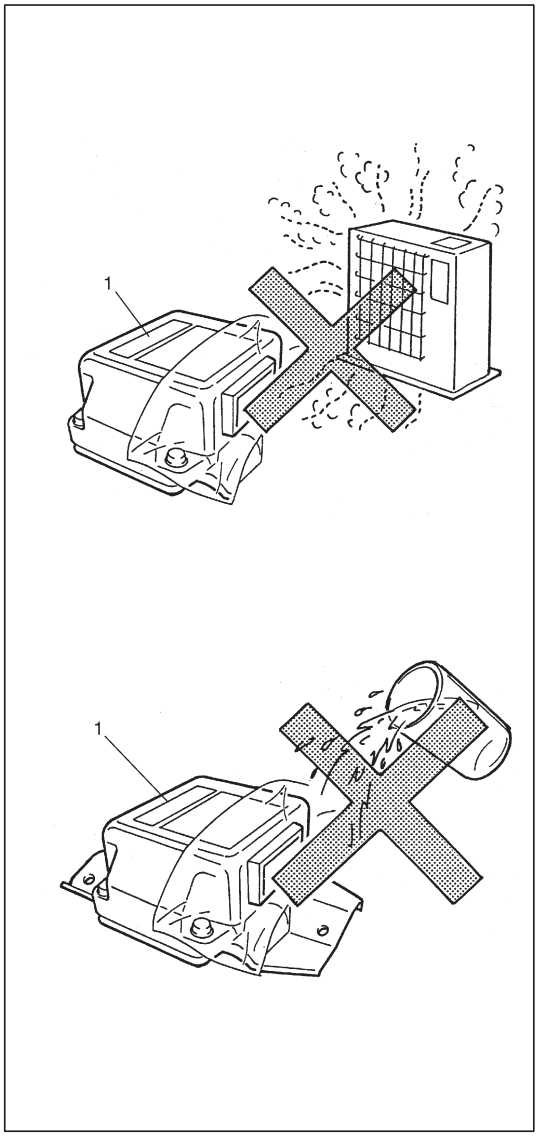

HANDLING AND STORAGE

SDM

WARNING:
Never power up air bag system when SDM is not rigidly attached to the vehicle. Otherwise, personal injury may result.

CAUTION:
After detecting one time of such collision as to meet deployment conditions, the SDM must not be used.
Refer to “Diagnosis” when checking the SDM.

- Never attempt disassembly of SDM.
- When storing SDM (1), select a place where neither high temperature nor high humidity is anticipated and oil, water and dust are kept off.
- If SDM was dropped from a height of 90 cm (3 ft) or more or if it is found to be damaged or deformed, replace it with a new one.
- If installation part of SDM was damaged, repair that part completely before reinstallation.
- All SDM fasteners must be carefully torqued to ensure proper operation of the air bag system.

LIVE (UNDEPLOYED) AIR BAG (INFLATOR) MODULES

Special care is necessary when handling and storing a live (undeployed) air bag (inflator) modules.

The rapid gas generation produced during deployment of the air bag could cause the air bag (inflator) module, or an object in front of the air bag (inflator) module, to be thrown through the air in the unlikely event of an accidental deployment.

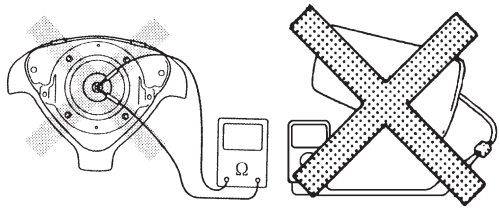

WARNING:
Never attempt to measure the resistance of the air bag (inflator) modules (driver and passenger). It is very dangerous as the electric current from the tester may deploy the air bag.

- Never attempt disassembly of the air bag (inflator) modules.
- If any abnormality is found, be sure to replace it with new one as an assembly.
- When an abnormality is noted as existing in the live (undeployed) air bag (inflator) module, be sure to deploy it before discarding it.
- When grease, cleaning agent, oil, water, etc., got on the air bag (inflator) modules (driver and passenger), wipe it off immediately with a dry cloth.
- If air bag (inflator) module was dropped from a height of 90 cm (3 ft) or more, it should be replaced with a new one as an assembly.

ALWAYS CARRY AIR BAG (INFLATOR) MODULE WITH TRIM COVER (AIR BAG OPENING) AWAY FROM BODY.

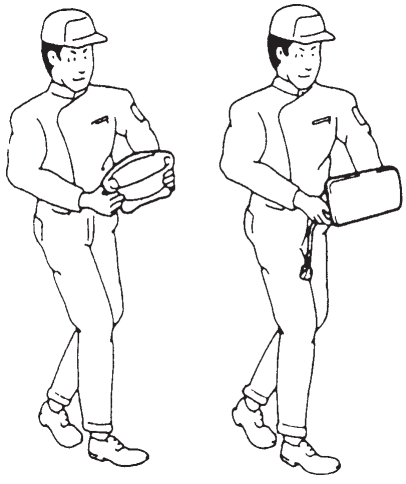

WARNING:
- **For handling and storage of a live air bag (inflator) module, select a place where the ambient temperature below 65°C (150°F), without high humidity and away from electric noise.**
- **When carrying a live air bag (inflator) module, make sure the bag opening is pointed away from you. In case of an accidental deployment, the bag will then deploy with minimal chance of injury. Never carry the air bag (inflator) module by the wires or connector on the underside of the module.**

Otherwise, personal injury may result.

ALWAYS PLACE AIR BAG (INFLATOR) MODULE ON WORKBENCH WITH TRIM COVER (AIR BAG OPENING) UP, AWAY FROM LOOSE OBJECTS.

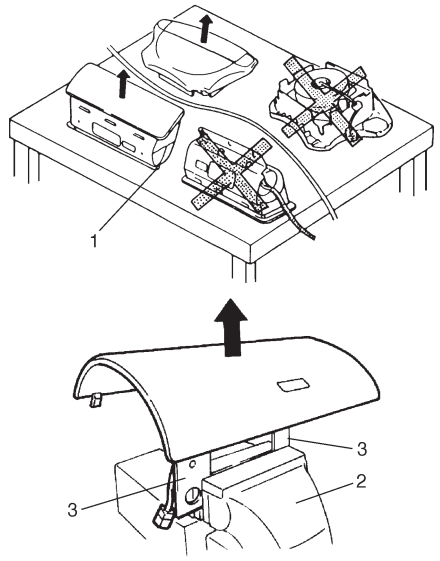

1. Slit on workbench
2. Workbench vise
3. Lower mounting bracket

WARNING:
When placing a live air bag (inflator) module on bench or other surface, always face the bag up, away from the surface. As the live passenger air bag (inflator) module must be placed with its bag (trim cover) facing up, place it on the workbench with a slit or use the workbench vise to hold it securely at its lower mounting bracket.
It is also prohibited to place anything on top of the trim cover and stack air bag (inflator) modules.
This is necessary so that a free space is provided to allow the air bag to expand in the unlikely event of accidental deployment.
Otherwise, personal injury may result.

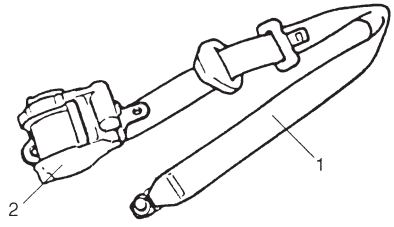

1. Webbing
2. Retractor assembly

LIVE (INACTIVATED) SEAT BELT PRETENSIONERS

Special care is necessary when handling and storing a live (inactivated) seat belt pretensioners.
Also, when the seat belt pretensioners activate, gas is generated and the seat belt is retracted into the retractor quickly.
Note, therefore, that if they activate accidentally, the seat belt pretensioners and other object(s) around them may be thrown through the air.

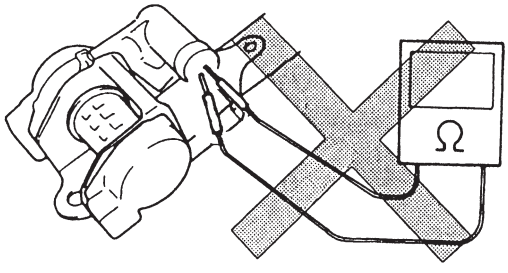

WARNING:
Never attempt to measure the resistance of the seat belt pretensioners. It is very dangerous as the electric current from the tester may activate pretensioner.

- Never attempt to disassemble the seat belt pretensioners (retractor assembly).
- If any abnormality is found, be sure to replace it with new one as an assembly.
- When an abnormality is noted as existing in the live (inactivated) seat belt pretensioner, be sure to activate it before discarding it.
- When grease, cleaning agent oil, water, etc., got on the seat belt pretensioners (retractor assembly), wipe it off immediately with a dry cloth.
- If seat belt pretensioner was dropped from a height of 30 cm (1 ft) or more, it should be replaced with a new one as an assembly.

WARNING:
- **For handling and storage of a live seat belt pretensioner, select a place where the ambient temperature below 65°C (150°F), without high humidity and away from electric noise.**
- **Never carry the seat belt pretensioner by the wires or connector on the underside of the pretensioner.**

Otherwise, personal injury may result.

DEPLOYED AIR BAG (INFLATOR) MODULES AND ACTIVATED SEAT BELT PRETENSIONERS

WARNING:
- **The air bag (inflator) module and seat belt pretensioner immediately after deployment/activation is very hot. Wait for at least 10 minutes to cool it off before proceeding the work.**
- **Do not apply water, oil, etc. to deployed air bag (inflator) module and to activate seat belt pretensioner.**
- **After an air bag (inflator) module has been deployed, the surface of the air bag may contain a powdery residue. This powder consists primarily of cornstarch (used to lubricate the bag as it inflates) and byproducts of the chemical reaction. As with many service procedures, gloves and safety glasses should be worn.**
- **Wash your hands with mild soap and water after completing the work.**

Refer to the procedure described under “Deployed Air Bag (Inflator) Module and Activated Seat Belt Pretensioner Disposal” in this section.

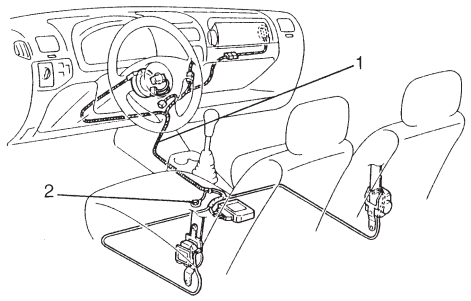

1. Air bag wire harness
2. Ground

AIR BAG WIRE HARNESS AND CONNECTORS

Air bag wire harness can be identified easily as it is covered with a yellow protection tube. Be very careful when handling it.

- When an open in air bag wire harness, damaged wire harness, connector or terminal is found, replace wire harness, connectors and terminals as an assembly.
- When installing it, be careful so that the air bag wire harness is not caught or does not interfere with other parts.
- Make sure all air bag system grounding points are clean and grounds are securely fastened for optimum metal-to-metal contact. Poor grounding can cause intermittent problems that are difficult to diagnose.

DISPOSAL

Do not dispose of the live (undeployed) air bag (inflator) modules and the live (inactivated) seat belt pretensioners. When disposal is necessary, be sure to deploy/activate the air bag and seat belt pretensioner according to deployment/activation procedure described under “Air Bag (Inflator) Module and Seat Belt Pretensioner Disposal”.

WARNING:
Failure to follow proper air bag (inflator) module and seat belt pretensioner disposal procedures can result in air bag deployment and pretensioner activation which could cause personal injury. Undeployed air bag (inflator) module and inactivated seat belt pretensioner must not be disposed of through normal refuse channels.
The undeployed air bag (inflator) module and inactivated seat belt pretensioner contain substances that can cause severe illness or personal injury if the sealed container is damaged during disposal.

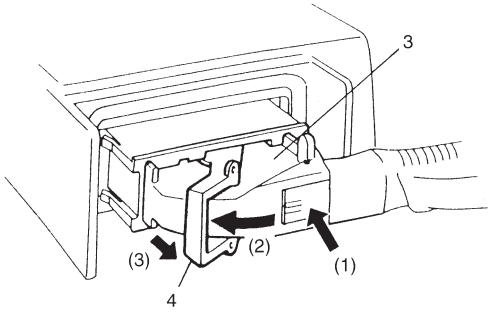

(1), (2): Release locking of lock lever
(3): After unlocked disconnect connector

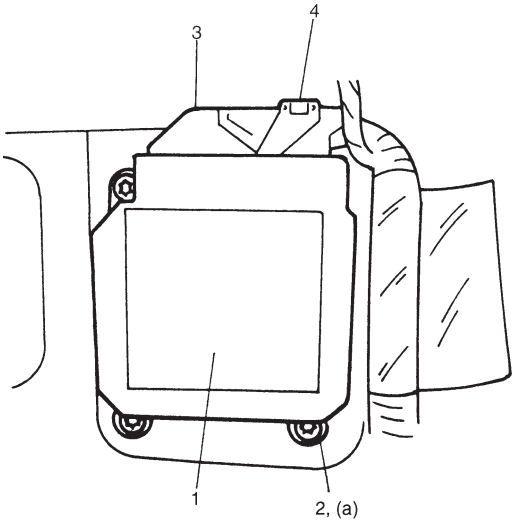

1. SDM
2. SDM bolts
3. SDM connector
4. Lock lever

SDM

WARNING:
During service procedures, be very careful when handling a Sensing and Diagnostic Module (SDM).
Be sure to read "Service Precautions" in this section before starting to work and observe every precaution during work. Neglecting them may result in personal injury or inactivation of the air bag system when necessary.

REMOVAL

1) Disconnect negative cable at battery.
2) Disable air bag system. Refer to "Disabling Air Bag System" earlier in this section.
3) Remove rear console box by removing screws.
4) Disconnect SDM connector from SDM.

CAUTION:
As this connector has a connector lock lever, refer to the left figure for its removal procedure.

5) Remove SDM from vehicle.

INSPECTION

CAUTION:
- **Do not connect a tester whatever type it may be.**
- **Never repair or disassemble SDM.**
- **If SDM was dropped from a height of 90 cm (3 ft) or more, it should be replaced.**

- Check SDM for dents, cracks or deformation.
- Check SDM connector for damage, cracks or lock mechanism.
- Check SDM terminal for bent, corrosion or rust.

If any faulty condition is found in above checks, replace.

INSTALLATION

For installation, reverse removal procedure, nothing the following points.

- Ensure that arrow on the SDM is pointing toward the front of the vehicle.
- Tighten SDM bolts to specified torque.

Tightening Torque
(a): 6 N·m (0.6 kg-m, 4.5 lb-ft)

- Connect SDM connector to SDM securely.
- Enable air bag system. Refer to "Enabling Air Bag System" earlier in this section.

PASSENGER AIR BAG (INFLATOR) MODULE (IF EQUIPPED)

WARNING:
- **Never attempt to disassemble or repair the passenger air bag (inflator) module. If any abnormality is found, be sure to replace it with new one as an assembly.**
- **Be sure to read "Precautions" in this section before starting to work and observe every precaution during work. Neglecting them may result in personal injury or undeployment of the air bag when necessary.**

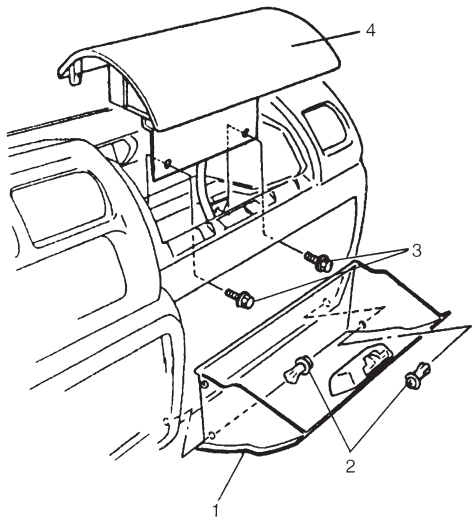

REMOVAL

1) Disconnect negative battery cable from battery.
2) Open glove box (1) and remove clips (2).
3) Remove glove box (1).

   NOTE:
   When it is difficult to pull out glove box, pull out it while pressing its stopper.

4) Disable air bag system. Refer to "Disabling Air Bag System" earlier in this section.
5) Remove passenger air bag (inflator) module attaching bolts (3) and passenger air bag (inflator) module (4) from vehicle.

   WARNING:
   Observe "Service Precautions" earlier in this section for handling and storing it.

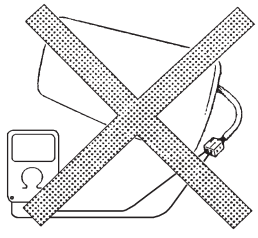

INSPECTION

WARNING:
Never measure resistance of passenger air bag (inflator) module or disassemble it. Otherwise personal injury may result.

CAUTION:
If air bag (Inflator) module was dropped from a height or 90 cm (3 ft) or more, it should be replaced.

Check air bag (inflator) module appearance visually for following symptoms and if any one of them is applicable, replace with a new one.
- Air bag has deployed.
- There is a crack in trim cover (pad surface).
- Wire harness or connector is damaged.
- Air bag (inflator) module is damaged or a strong impact (e.g., dropping) was applied to it.

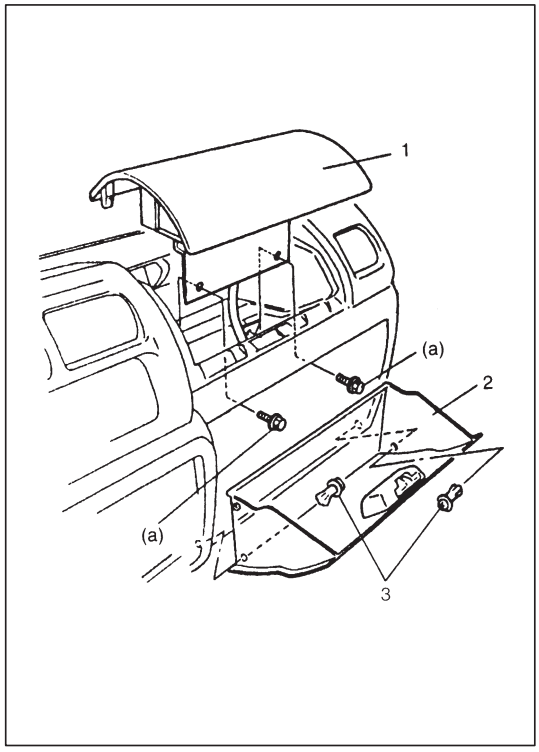

INSTALLATION

1) Install passenger air bag (inflator) module (1) to vehicle.
2) Tighten passenger air bag (inflator) module attaching bolts to specified torque.

   Tightening Torque
   (a): 23 N·m (2.3 kg-m, 16.5 lb-ft)

3) Set glove box (2) to original position of instrument panel and open it, install glove box clips (3).
4) Connect negative battery cable to battery.
5) Enable air bag system. Refer to “Enabling Air Bag System” earlier in this section.

DRIVER AIR BAG (INFLATOR) MODULE

Refer to SECTION 3C for removal, inspection and installation.

CONTACT COIL AND COMBINATION SWITCH ASSEMBLY

Refer to SECTION 3C for removal, inspection and installation.

SEAT BELT PRETENSIONER

Refer to SECTION 10A for removal, inspection and installation.

AIR BAG WARNING LAMP

Refer to SECTION 8C for removal and installation.

AIR BAG (INFLATOR) MODULE AND SEAT BELT PRETENSIONER DISPOSAL

WARNING:
Failure to follow proper air bag (inflator) module and seat belt pretensioner disposal procedures can result in air bag deployment and pretensioner activation which may cause personal injury.
Undeployed air bag (inflator) module/Inactivated seat belt pretensioner must not be disposed of through normal refuse channels.
The undeployed air bag (inflator) module and inactivated seat belt pretensioner contain substances that can cause severe illness or personal injury if the sealed container is damaged during disposal.

Do not dispose of the live (undeployed) air bag (inflator) modules and seat belt pretensioners.
The method employed depends upon the final disposition of the particular vehicle, as noted in “Deployment/Activation Outside Vehicle” and “Deployment/Activation Inside Vehicle” in this section.

Deployment/Activation Outside Vehicle . . . . Follow this procedure when disposing of the air bag (inflator) module(s) and seat belt pretensioner(s) only (i.e., the vehicle itself will be used again).

Deployment/Activation Inside Vehicle . . . . . Follow this procedure when scrapping the entire vehicle including the air bag (inflator) modules and seat belt pretensioners.

WARNING:
Following precautions must be observed for this work. Failure to observe any of them may result in personal injury.
- **To avoid an accidental deployment, this work should be performed by no more than one person.**
- **The procedure should be followed strictly as described here.**
- **Be sure to read “Service Precautions” in this section beforehand.**
- **Never connect deployment harness to any power source before connecting deployment harness to the air bag (inflator) module and seat belt pretensioner. Deployment harness shall remain shorted and not be connected to a power source until the air bag is to be deployed and the pretensioner is to be activated.**
- **Since the smoke is produced when air bag is deployed and pretensioner is activated, select a well-ventilated area.**
- **The air bag (inflator) module and seat belt pretensioner will immediately deploy/activate when a power source is connected to it. Wear safety glasses throughout this entire deployment/activation and disposal procedure.**
- **Wear suitable ear protection when deploying air bag/activating pretensioner. Also, advise those who are in the area close to deployment/activation site to wear suitable ear protection.**
- **Do not deploy/activate two or more air bag system components (air bag (inflator) modules and seat belt pretensioners) at the same time.**

DEPLOYMENT/ACTIVATION OUTSIDE VEHICLE

Use this procedure when the vehicle itself is used again (only the air bag (inflator) module(s) and seat belt pretensioner(s) are disposed of).

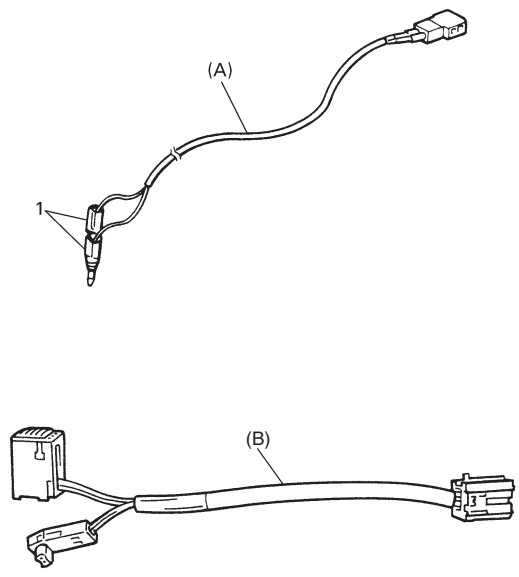

1) Turn ignition switch to “LOCK”, remove key and put on safety glasses.
2) Check that there is no open, short or damage in special tools (deployment harness and adaptor cable). If any faulty is found, do not use it and be sure to use new deployment harness and/or adaptor cable.

Special Tool
(A): 09932-75030
(B): 09932-78320

3) Short the two deployment harness leads (1) together by fully seating one banana plug into the other.

> **WARNING:**
> **Deployment harness shall remain shorted and not be connected to a power source until the air bag is to be deployed and seat belt pretensioner is to be activated.**

ALWAYS CARRY AIR BAG (INFLATOR) MODULE WITH TRIM COVER (AIR BAG OPENING) AWAY FROM BODY.

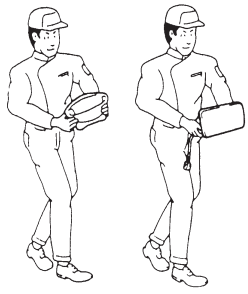

ALWAYS PLACE AIR BAG (INFLATOR) MODULE ON WORKBENCH WITH TRIM COVER (AIR BAG OPENING) UP, AWAY FROM LOOSE OBJECTS.

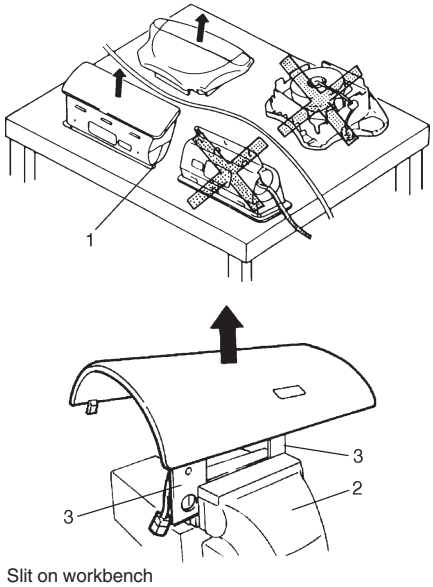

1. Slit on workbench
2. Workbench vise
3. Lower mounting bracket

4) Remove air bag (inflator) module(s) and seat belt pretensioner(s) from vehicle, referring to SECTION 3C, 10A or this section.

> **WARNING:**
> - **Always carry live air bag (inflator) module with trim cover away from you.**
> - **When storing a live air bag (inflator) module or when leaving a live air bag (inflator) module unattended on a bench or other surface, always face the bag and trim cover up and away from the surface. As the live passenger air bag (inflator) module must be placed with its bag (trim cover) facing up, place it on the workbench with a slit or use the workbench vise to hold it securely at its lower mounting bracket.**
> **This is necessary so that a free space is provided to allow the air bag to expand in the unlikely event of accidental deployment.**
>
> **Failure to follow procedures may result in personal injury.**

WARNING:
- **For handing and storage of a live seat belt pretensioner, select a place where the ambient temperature below 65°C (150°F), without high humidity and away from electric noise.**
- **When placing a live seat belt pretensioner on the workbench or other surface, be sure not to put a seat belt pretensioner on top of another.**

Otherwise, personal injury may result.

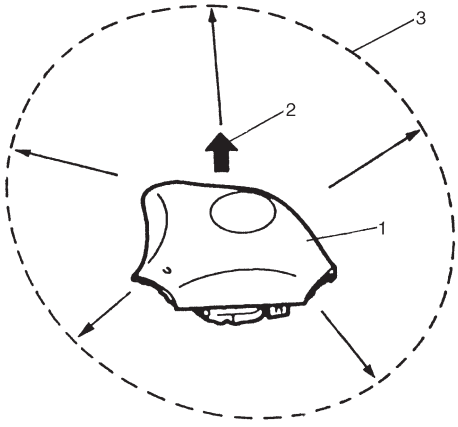

1. Driver air bag (inflator) module
2. Trim cover must face up
3. 185 cm (6 feet) of clearance

5) [In case of Driver Air Bag (Inflator) Module]
   i) Clear a space on the ground about 185 cm (6 feet) in diameter where the driver air bag (inflator) module is to be deployed. A paved, outdoor location where there is no activity is preferred. If an outdoor location is not available, a space on the shop floor where there is no activity and sufficient ventilation is recommended.
   Ensure no loose or flammable objects are within the deployment area.
   ii) Place the driver air bag (inflator) module, with its vinyl trim cover facing up, on the ground in the space just cleared.

[In case of Passenger Air Bag (Inflator) Module]
   i) Clear a space on the ground about 185 cm (6 feet) in diameter where the fixture (special tool) with attached air bag (inflator) module is to be placed for deployment. A paved outdoor location where there is no activity is preferred. If an outdoor location is not available, a space on the shop floor where there is no activity and sufficient ventilation is recommended. Ensure that no loose or flammable objects are within the deployment area.

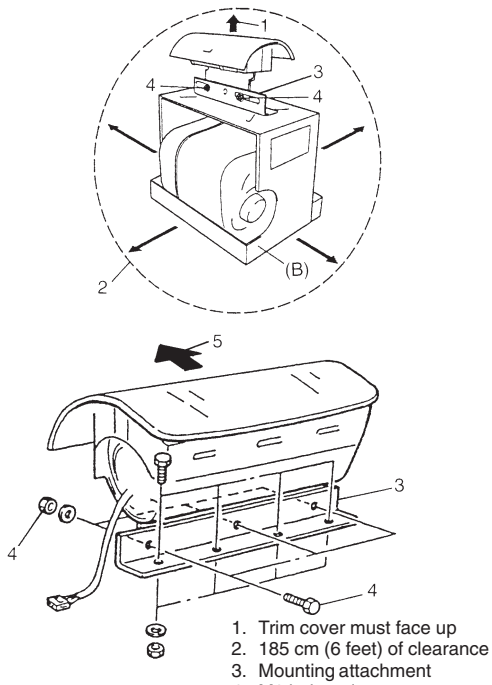

1. Trim cover must face up
2. 185 cm (6 feet) of clearance
3. Mounting attachment
4. M8 bolt and nut
5. Deploying direction

ii) Place special tool (passenger air bag (inflator) module deployment fixture) on the ground in the space cleared in step i), if it has not already been placed there.

Special Tool
(B): 09932-75041 or 09932-75040 and 09932-75050

iii) Fill plastic reservoir in fixture (special tool) with water or sand. This is necessary to provide sufficient stabilization of the fixture during deployment.

iv) Attach the passenger air bag (inflator) module in the fixture (special tool) using mounting attachment, hold-down bolts and nuts and M8 bolts and nuts.

NOTE:
Make sure that deploying direction faces as shown in figure against mounting attachment.

CAUTION:
Be sure to use the following bolt and nut for fixing passenger air bag (inflator) module to mounting attachment. Size: M8, Strength: 7T

Securely hand-tighten all fastener prior to deployment.

[In case of seat belt pretensioner]

i) Pull out the webbing fully as shown in the figure and cut it at the root of the pretensioner (retractor assembly) as shown in the figure.

WARNING:
As the drum of the retractor assembly turns very quickly as soon as the webbing is cut, fix the retractor assembly with a vise on the workbench and keep your hands and fingers away from it when cutting the webbing.

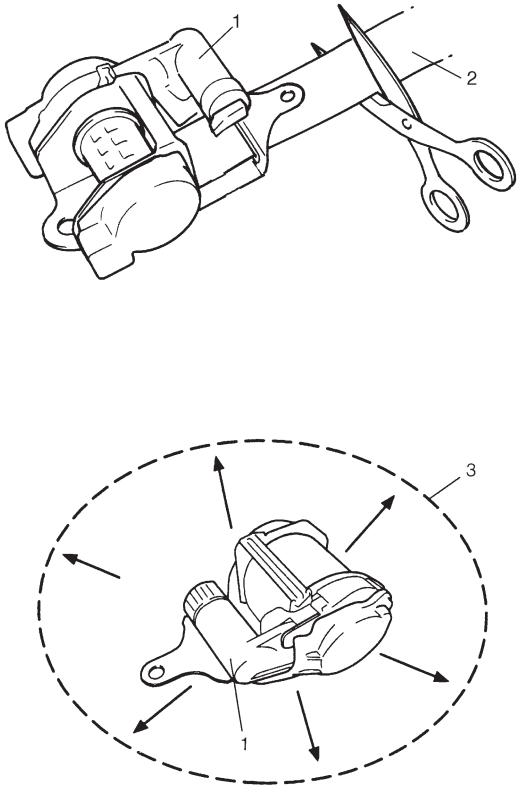

1. Seat belt pretensioner (retractor assembly)
2. Webbing
3. 185 cm (6 feet) of clearance

ii) Clear a space on the ground about 185 cm (6 feet) in diameter where the seat belt pretensioner is to be activated. A paved, outdoor location where there is no activity is preferred. If an outdoor location is not available, a space on the shop floor where there is no activity and sufficient ventilation is recommended.
Ensure no loose or flammable objects are within the activation area.

iii) Place the seat belt pretensioner as shown in the figure on the ground in the space just cleared.

For Driver Air Bag (Inflator) Module

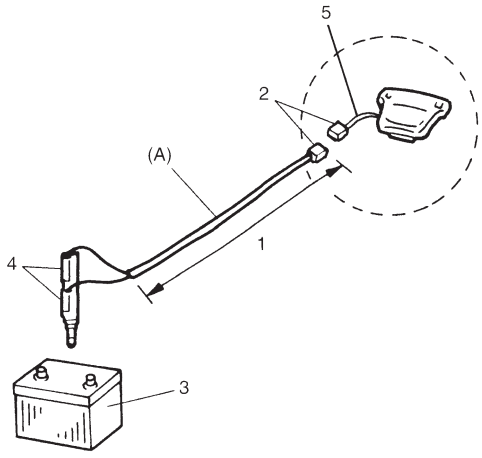

For Passenger Air Bag (Inflator) Module

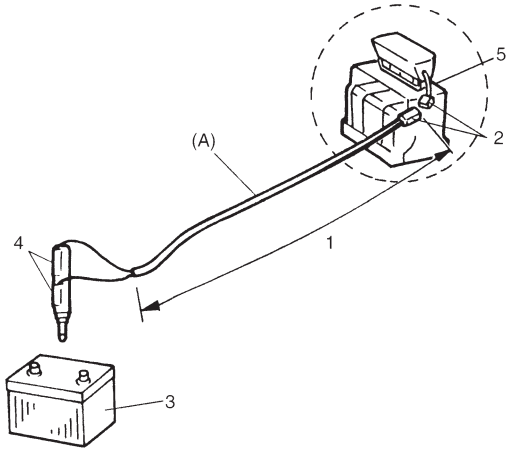

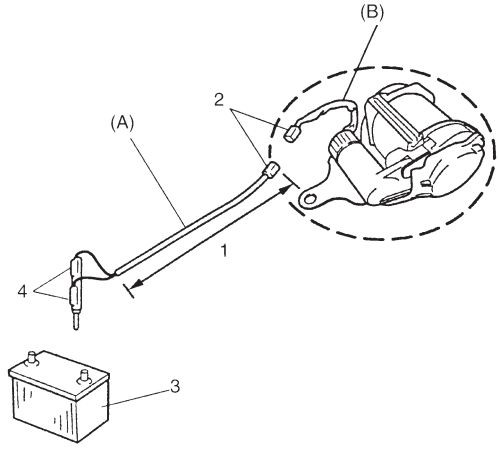

1. Stretch deployment harness to full length 10 m (33 ft).
2. Connect connectors.
3. Power source (12V vehicle battery).
4. Short the two deployment harness leads.
5. Air bag wire harness attached to passenger air bag module.

6) Stretch the deployment harness from the driver or passenger air bag (inflator) module to its full length 10 m (33 ft).

Special Tool
(A): 09932-75030
(B): 09932-78320

7) Place a power source near the shorted end of the deployment harness. Recommended application: 12 Volts minimum, 2 amps minimum. A vehicle battery is suggested.
8) Verify that the area around the driver or passenger air bag (inflator) module is clear of all people and loose or flammable objects.
9) [In case of Driver Air Bag (Inflator) Module]
Verify that the driver air bag (inflator) module is resting with its vinyl trim cover facing up.
Use wire harness as adaptor cable which is attached to passenger air bag module.
[In case of Passenger Air Bag (Inflator) Module]
Verify that the passenger air bag (inflator) module is firmly and properly secured in passenger air bag (inflator) module deployment fixture (special tool).
[In case of Seat Belt Pretensioner]
Verify that the seat belt pretensioner, with its warning label attached side facing up as shown in the figure on the ground in the space just cleared.
Connect adaptor cable to pretensioner and air bag wire harness as necessary.

Special Tool
(B): 09932-78320

10) Connect the air bag (inflator) module or seat belt pretensioner to the deployment harness connector and lock connector with lock lever.
11) Notify all people in the immediate area that you intend to deploy/activate the air bag (inflator) module or seat belt Pretensioner.

NOTE:
- **When the air bag deploys and the pretensioner activates, the rapid gas expansion will create a substantial report. Wear suitable ear protection. Notify all people in the immediate area that you intend to deploy the air bag (inflator) module or to activate the seat belt pretensioner and suitable ear protection should be worn.**
- **When the air bag deploys and the pretensioner activates, air bag (inflator) module and pretensioner (retractor assembly) may jump about 30 cm (1 ft) vertically. This is a normal reaction of them to the force of the rapid gas expansion inside the air bag and pretensioner.**
- **After the air bag (inflator) module has been deployed, the surface of the air bag may contain a powdery residue. This powder consists primarily of cornstarch (used to lubricate the bag as it inflates) and byproducts of the chemical reaction.**

WARNING:
- **After deployment/activation, the metal surfaces of the air bag (inflator) module and the seat belt pretensioner will be very hot. Do not touch the metal areas of them for about 10 minutes after deployment/activation.**
- **Do not place the deployed air bag (inflator) module and the activated seat belt pretensioner near any flammable objects.**
- **Do not apply water, oil, etc. to deployed air bag (inflator) module and activated seat belt pretensioner.**
- **If the deployed air bag (inflator) module and the activated seat belt pretensioner must be moved before it is cool, wear gloves and handle it by using nonmetal material such as the air bag, webbing and vinyl trim.**

Failure to follow procedures may result in fire or personal injury.

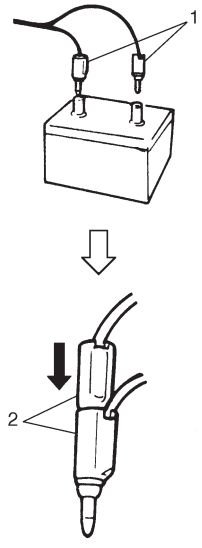

1. Connect one banana plug to positive terminal of power source (12V vehicle battery) and then the other to negative terminal to immediately deploy.
2. Short to two deployment harness leads.

12) Separate the two banana plugs on the deployment harness.
13) Connect the deployment harness to the power source (12 V vehicle battery) to immediately deploy/activate the air bag or seat belt pretensioner.
14) Disconnect the deployment harness from power source (12 V vehicle battery) and short the two deployment harness leads together by fully seating one banana plug into the other.
15) In the unlikely event that the air bag (inflator) module or seat belt pretensioner did not deploy/activate after following these procedures, proceed immediately with Steps 20) through 23). If the air bag (inflator) module or the seat belt pretensioner did deploy/activate, proceed with Steps 16) through 19).
16) Put on a pair of shop gloves to protect your hands from possible irritation and heat when handling the deployed air bag (inflator) module and the activated seat belt pretensioner.
17) Disconnect the deployment harness from the air bag (inflator) module and the seat belt pretensioner as soon after deployment/activation as possible.
    This will prevent damage to the deployment harness due to possible contact with the hot air bag (inflator) module and seat belt pretensioner. The deployment harness are designed to be reused. They should, however, be inspected for damage after each deployment/activation and replaced if necessary.

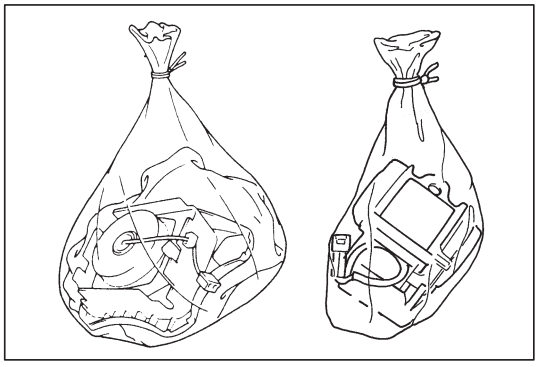

18) Dispose of the deployed air bag (inflator) module and the activated seat belt pretensioner through normal refuse channels after it has cooled for at least 10 minutes and tightly seal the air bag (inflator) module and the seat belt pretensioner in a strong vinyl bag. (Refer to “Deployed Air Bag (Inflator) Module and Activated Seat Belt Pretensioner Disposal” in detail.)
19) Wash your hands with mild soap and water afterward.

NOTE:
The remaining steps are to be followed in the unlikely event that the air bag (inflator) module did not deploy or the seat belt pretensioner did not activate after following these procedures.

20) Ensure that the deployment harness has been disconnected from the power source and that its two banana plugs have been shorted together by fully seating one banana plug into the other.
21) Disconnect the deployment harness and cables from the air bag (inflator) module and the seat belt pretensioner.
22) [For air bag (inflator) module]
    Temporarily store the air bag (inflator) module with its vinyl trim cover facing up, away from the surface upon which it rests. Refer to “Service Precautions” in this section for details.
    [For seat belt pretensioner]
    When temporarily storing the seat belt pretensioner. Refer to “Service Precautions” in this section for details.
23) Contact your local distributor for further assistance.

For Driver Air Bag (Inflator) Module

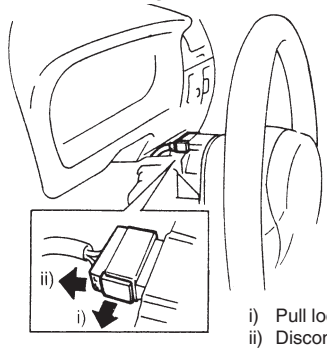

For Passenger Air Bag (Inflator) Module

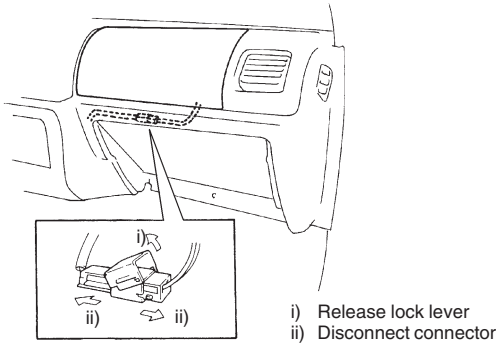

For Seat Belt Pretensioner

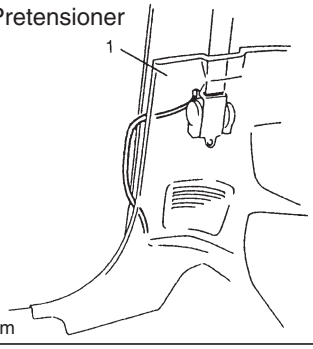

1. Quarter inner trim

DEPLOYMENT/ACTIVATION INSIDE VEHICLE

Use this procedure when scrapping the entire vehicle including the air bag (inflator) modules and seat belt pretensioners.

CAUTION:
When vehicle itself will be used again, deploy/activate the air bag and pretensioner outside vehicle according to "Deployment/Activation Outside Vehicle", for deploying/activating it inside will cause the instrument panel, glove box and their vicinity to be deformed.
Failure to observe this CAUTION may require unneeded vehicle inspection and repair.

1) Turn ignition switch to "LOCK", remove key and put on safety glasses.
2) Remove all loose objects from front seats and instrument panel.
3) [For driver air bag (inflator) module]
   Disconnect contact coil connector (Yellow connector) located near the base of the steering column.
   [For passenger air bag (inflator) module]
   Remove glove box from instrument panel and disconnect passenger air bag (inflator) module connector (Yellow connector).
   [For seat belt pretensioner]
   Remove both side (driver and passenger side) center pillar lower trim and disconnect seat belt pretensioner (Yellow) connectors from pretensioner.
4) Confirm that each air bag (inflator) module is securely mounted.

For Driver Air Bag (inflator) Module

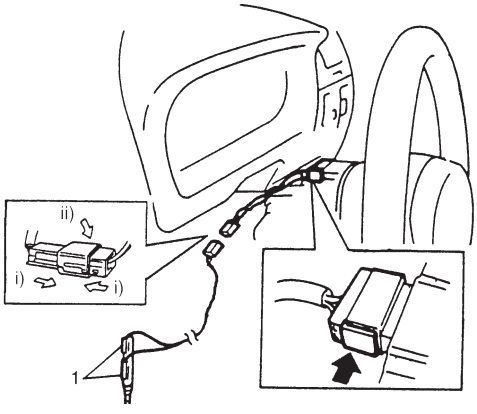

1. Short deployment harness leads.

5) Check that there is no open, short or damage in special tool (deployment harness). If any faulty condition is found, do not use it and be sure to use new deployment harness.

   Special Tool
   (A): 09932-75030

6) Short the two deployment harness leads together by fully seating one banana plug into the other.

   WARNING:
   Deployment harness shall remain shorted and not be connected to a power source until the air bag is to be deployed and seat belt pretensioner is to be activated.

7) Connect adaptor cable (for driver air bag module and pretensioners) and deployment harness to air bag (inflator) module (driver or passenger) or seat belt pretensioner (driver or passenger) and lock connector with lock lever.

   Special Tool
   (B): 09932-78320

Driver side for left hand steering vehicle

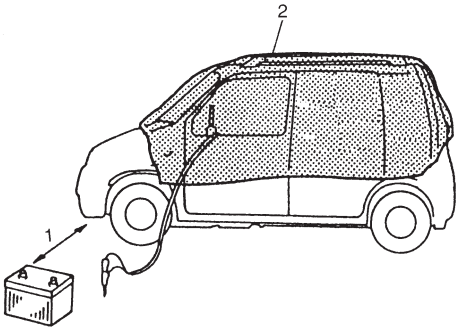

Driver side for right hand steering vehicle

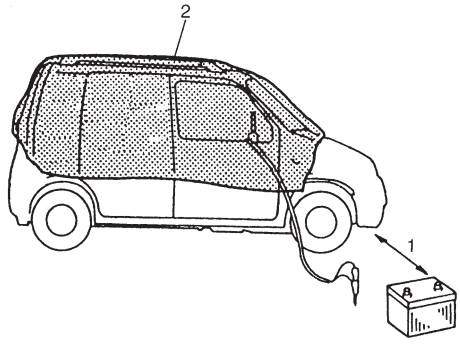

1. Stretch deployment harness to its full length 10 m (33 ft).
2. Drop cloth, blanket or similar item.

8) Route deployment harness out the vehicle.
9) Verify that the inside of the vehicle and the area surrounding the vehicle are clear of all people and loose or flammable objects.
10) Stretch the deployment harness to its full length 10 m (33 ft).

Special Tool
(A): 09932-75030

11) Place a power source near the shorted end of the deployment harness. Recommended application: 12 Volts minimum, 2 amps minimum. A vehicle battery is suggested.
12) Completely cover windshield area and front door window openings with a drop cloth, blanket to similar item. This reduces the possibility of injury due to possible fragmentation of the vehicle's glass or interior.
13) Notify all people in the immediate area that you intend to deploy the air bag (inflator) module or activate the seat belt pretensioner.

NOTE:
- **When the air bag deploys and the pretensioner activates, the rapid gas expansion will create a substantial report. Wear suitable ear protection. Notify all people in the immediate area that you intend to deploy the air bag (inflator) module or to activate the seat belt pretensioner and suitable ear protection should be worn.**
- **After the air bag (inflator) module has been deployed, the surface of the air bag may contain a powdery residue. This powder consists primarily of cornstarch (used to lubricate the bag as it inflates) and byproducts of the chemical reaction.**

WARNING:
- **After deployment/activation, the metal surfaces of the air bag (inflator) module and the seat belt pretensioner will be very hot. Do not touch the metal areas of them for about 10 minutes after deployment/activation.**
- **Do not place the deployed air bag (inflator) module and the activated seat belt pretensioner near any flammable objects.**
- **Do not apply water, oil, etc. to deployed air bag (inflator) module and activated seat belt pretensioner.**
- **If the deployed air bag (inflator) module and the activated seat belt pretensioner must be moved before it is cool, wear gloves and handle it by using nonmetal material such as the air bag, webbing and vinyl trim.**

Failure to follow procedures may result in fire or personal injury.

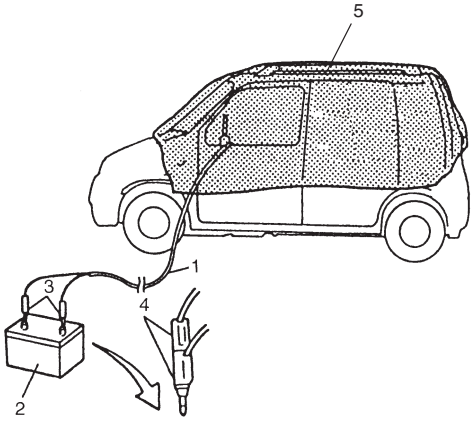

1. Stretch it to full length 10m (33 ft)
2. Power source (12V vehicle battery)
3. Connect one banana plug to positive terminal of power source (12V vehicle battery) and then the other to negative terminal to immediately deploy.
4. Short harness leads after deployment.
5. Drop cloth, blanket or similar them.

14) Separate the two banana plugs on the deployment harness.
15) Connect the deployment harness to the power source (12 V vehicle battery) to immediately deploy/activate the air bag or the pretensioner.
16) Disconnect the deployment harness from the power source (12 V vehicle battery) and short the two deployment harness leads together by fully seating one banana plug into the other.
17) Put on a pair of shop gloves to protect your hands from possible irritation and heat when handling the deployed air bag (inflator) module and the activated seat belt pretensioner.
18) Disconnect the deployment harness from the air bag (inflator) module and the seat belt pretensioner as soon after deployment/activation as possible.
    This will prevent damage to the deployment harness due to possible contact with the hot air bag (inflator) module and seat belt pretensioner. The deployment harness are designed to be reused. They should, however, be inspected for damage after each deployment/activation and replaced if necessary.
19) Carefully remove drop cloth from vehicle and clean off any fragments or discard drop cloth entirely.
20) Repeat Steps 2) through 19) to deploy/activate air bag (inflator) modules and seat belt pretensioners which has not been deployed/activated, if any.
21) In the unlikely event that the air bag (inflator) module and the seat belt pretensioner proceed immediately with Steps 23) through 25). If the air bag (inflator) module and the seat belt pretensioner did deploy/activate, proceed with Steps 22).
22) With air bags deployed and pretensioners activated the vehicle may be scrapped in the same manner as a non-air bag system equipped vehicle.
23) Remove the undeployed air bag (inflator) module(s) and the inactivated seat belt pretensioner(s) from the vehicle. For driver air bag (inflator) module refer to SECTION 3C, for passenger air bag (inflator) module refer to “On-Vehicle Service” in this section, for seat belt pretensioner refer to SECTION 10A.
24) [For air bag (inflator) module]
    Temporarily store the air bag (inflator) module with its vinyl trim cover facing up, away from the surface upon which it rests. Refer to “Service Precautions” in this section for details.
    [For seat belt pretensioner]
    When temporarily strong the seat belt pretensioner, be sure NOT to face its exhaust hole provided side down. It must face up. Refer to “Service Precautions” in this section for details.
25) Contact your local distributor for further assistance.

DEPLOYED AIR BAG (INFLATOR) MODULE AND ACTIVATED SEAT BELT PRETENSIONER DISPOSAL

WARNING:
Failure to follow proper air bag (inflator) module and seat belt pretensioner disposal procedures can result in air bag deployment and pretensioner activation which may cause personal injury. The undeployed air bag (inflator) module and the inactivated seat belt pretensioner must not be disposed of through normal refuse channels.
The undeployed air bag (inflator) module and the inactivated seat belt pretensioner contains substances that can cause severe illness or personal injury if the sealed container is damaged during disposal.

Deployed air bag (inflator) module and the activated seat belt pretensioner can be disposed of through normal refuse channels just like any other parts. For their disposal, however, following points should be noted.

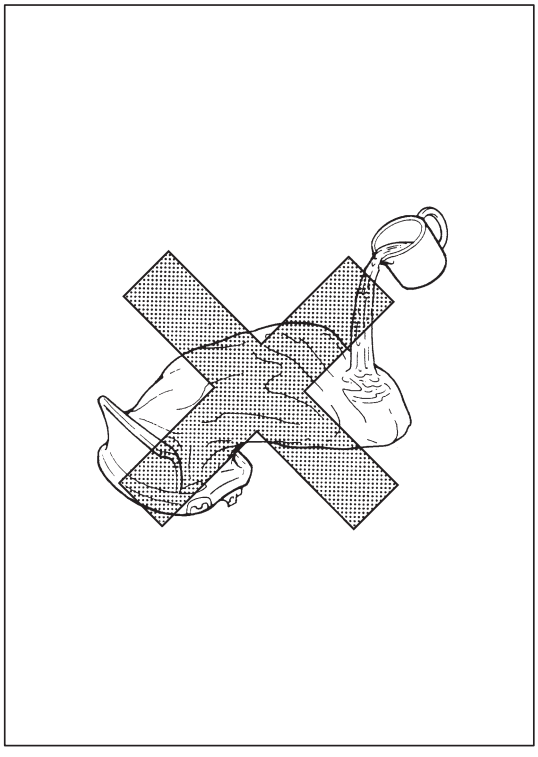

- The air bag (inflator) module and the seat belt pretensioner immediately after deployment/activation is very hot. Wait for 10 minutes to cool it off before handling them.
- Never apply water, oil, etc. to deployed air bag (inflator) module and the activated seat belt pretensioner to cool it off and be careful so that water, oil etc. does not get on the deployed air bag (inflator) module and the activated seat belt pretensioner.
- After the air bag (inflator) module has been deployed, the surface of the air bag may contain a powdery residue. This powder consists primarily of cornstarch (used to lubricate the bag as it inflates) and byproducts of the chemical reaction. As with many service procedures, you should wear gloves and safety glasses.

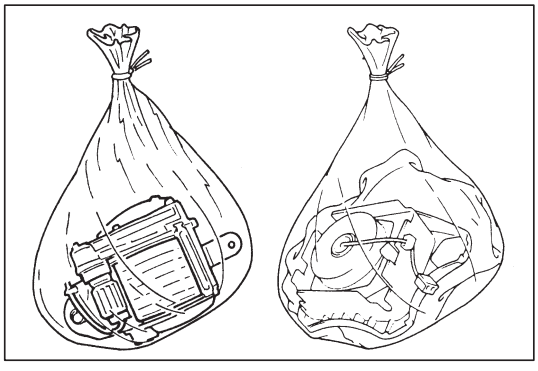

- When disposing of the deployed air bag (inflator) module and the activated seat belt pretensioner, be sure to seal it in a vinyl bag.
- When air bag (inflator) module and seat belt pretensioner have been deployed/activated inside the vehicle which is going to be scrapped, leave them as installed to the vehicle.
- Be sure to wash your hands with mild soap and water after handling it.

SPECIAL TOOLS

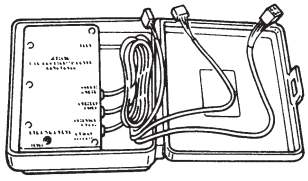

09932-75010
Air bag driver/passenger load tool

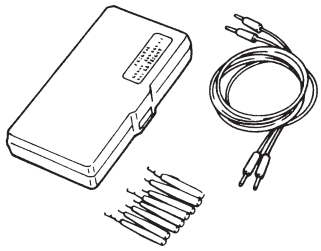

09932-76010
Connector test adapter kit

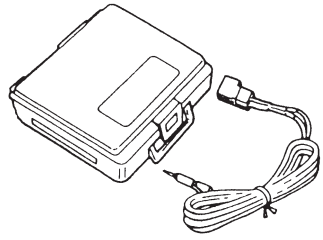

09932-75030
Air bag deployment harness

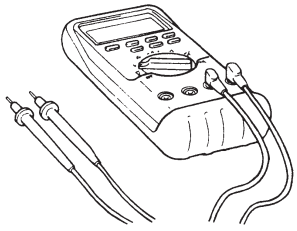

Digital multimeter for which the maximum test current is 10 mA or less at the minimum range of resistance measurement.

WARNING:
Be sure to use the specified digital multimeter. Otherwise, air bag deployment or personal injury may result.

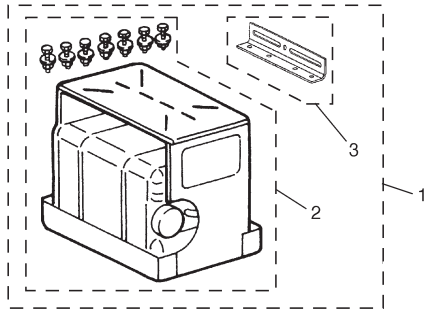

1. 09932-75041 (PAB deployment fixture)
   or
2. 09932-75040 (PAB deployment fixture) and
3. 09932-75050 (PAB deployment fixture bracket)
   PAB : Passenger air bag (inflator) module

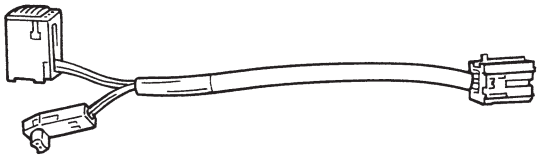

09932-78320
Deployment adapter cable

09932-78310
Adapter cable

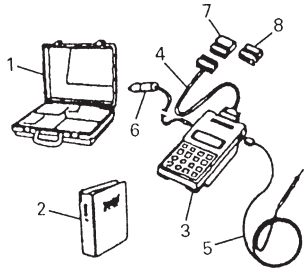

1. Storage case
2. Operator's manual
3. Tech 1A
4. DLC cable
5. Test lead/probe
6. Power source cable
7. DLC cable adaptor
8. Self-test adaptor

09931-76011
SUZUKI scan tool (Tech 1A) kit

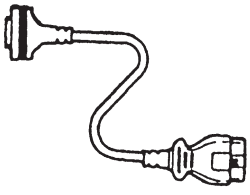

09931-76030
16/14 pin DLC cable

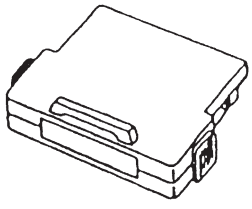

Mass storage cartridge

Prepared by

MAGYAR SUZUKI CORPORATION

Overseas Service Department

1st Ed. December, 1999

Printing: January, 2000 1064