Important

WARNING/CAUTION/NOTE

Please read this manual and follow its instructions carefully. To emphasize special information, the words **WARNING**, **CAUTION** and **NOTE** have special meanings. Pay special attention to the messages highlighted by these signal words.

WARNING:

Indicates a potential hazard that could result in death or injury.

CAUTION:

Indicates a potential hazard that could result in vehicle damage.

NOTE:

Indicates special information to make maintenance easier or instructions clearer.

WARNING:

This service manual is intended for authorized SUZUKI dealers and qualified service technicians only. Inexperienced mechanics or mechanics without the proper tools and equipment may not be able to properly perform the services described in this manual. Improper repair may result in injury to the mechanic and may render the vehicle unsafe for the driver and passengers.

WARNING:

For vehicles equipped with a Supplemental Restraint (Air Bag) System :

- **Service on and around the air bag system components or wiring must be performed only by an authorized SUZUKI dealer.**
  Refer to "Air Bag System Components and Wiring Location View" under "General Description" in air bag system section in order to confirm whether you are performing service on or near the air bag system components or wiring. Please observe all WARNINGS and "Service Precautions" under "On-Vehicle Service" in air bag system section before performing service on or around the air bag system components or wiring. Failure to follow WARNINGS could result in unintentional activation of the system or could render the system inoperative. Either of these two conditions may result in severe injury.
- **If the air bag system and another vehicle system both need repair, SUZUKI recommends that the air bag system be repaired first, to help avoid unintended air bag system activation.**
- **Do not modify the steering wheel, instrument panel or any other air bag system component (on or around air bag system components or wiring). Modifications can adversely affect air bag system performance and lead to injury.**
- **If the vehicle will be exposed to temperatures over 93°C (200°F) (for example, during a paint baking process), remove the air bag system components (air bag (inflator) module, sensing and diagnostic module (SDM), seat belt pretensioner (if equipped) beforehand to avoid component damage or unintended activation.**

The circle with a slash in this manual means "Don't do this" or "Don't let this happen".

Foreword

This manual provides information on the unit repair service procedures for the following units.

Applicable Units: (Manual Transmission/Automatic Transmission/Transfer/Differentials) for

- **GRAND VITARA (SQ416/SQ420/SQ625) with the following vehicle identification numbers (VINs.)**

SQ416

2S2GTA03C00600001 ~
ⓧ JSAFTA03V00200001 ⓧ ~
ⓧ JSAFTA03V30200001 ⓧ ~
ⓧ JSAFTA03V40200001 ⓧ ~
ⓧ JSAFTB03V00200001 ⓧ ~
ⓧ JSAFTD02V00200001 ⓧ ~
JS3TA03V ⍁ 34100001 ~
JS3TB03V ⍁ 34100001 ~
JS3TA03V ⍁ 44100001 ~
JS3TB03V ⍁ 44100001 ~

SQ420 with J20 enigne

2S2GTA52C00600001 ~
ⓧ JSAFTB52V00200001 ⓧ ~
ⓧ JSAFTL52V00200001 ⓧ ~
ⓧ JSAFTL52V34200001 ⓧ ~
ⓧ JSAFTB52V34200001 ⓧ ~
ⓧ JSAFTB52V44200001 ⓧ ~
JS3TB52V ⍁ 34100001 ~
JS3TB52V ⍁ 44100001 ~
JS3TL52V ⍁ 34100001 ~
JS3TL52V ⍁ 44100001 ~

SQ625

ⓧ JSAFTD62V00200001 ⓧ ~
ⓧ JSAFTD62V34200001 ⓧ ~
ⓧ JSAFTD62V44200001 ⓧ ~
JS3TD62V ⍁ 34100001 ~
JS3TD62V ⍁ 44100001 ~

SQ420 with RHZ and RHW engine

ⓧ JSAFTB83V00100001 ⓧ ~
ⓧ JSAFTD83V00100001 ⓧ ~

- **GRAND VITARA XL-7 (JA627/JA420WD) with following vehicle identification numbers (VINs.)**

JA627

ⓧ JSAHTX92V00170001 ⓧ ~
ⓧ JSAHTX92V30170001 ⓧ ~
ⓧ JSAHTX92V40200001 ⓧ ~
ⓧ JSAHTX92V34170001 ⓧ ~
ⓧ JSAHTX92V44200001 ⓧ ~
ⓧ JSAHTY92V00170001 ⓧ ~
JS3TX92V ⍁ 34170001 ~
JS3TX92V ⍁ 44200001 ~

JA420WD

ⓧ JSAHTX83V00200001 ⓧ ~

When replacing parts or servicing by disassembling, it is recommended to use SUZUKI genuine parts, tools and service materials (lubricant, sealants, etc.) as specified in each description.

All information, illustrations and specifications contained in this literature are based on the latest product information available at the time of publication approval. And used as the main subject of description is the vehicle of standard specifications among others.
Therefore, note that illustrations may differ from the vehicle being actually serviced.
The right is reserved to make changes at any time without notice.

NOTE:

"SUZUKI dealers" means Authorized Suzuki Service Workshop (in Europe).

SUZUKI MOTOR CORPORATION

Table of Contents

SECTION 7A

MANUAL TRANSMISSION (TYPE 1)

CONTENTS

General Description

Identification of Transmission Type

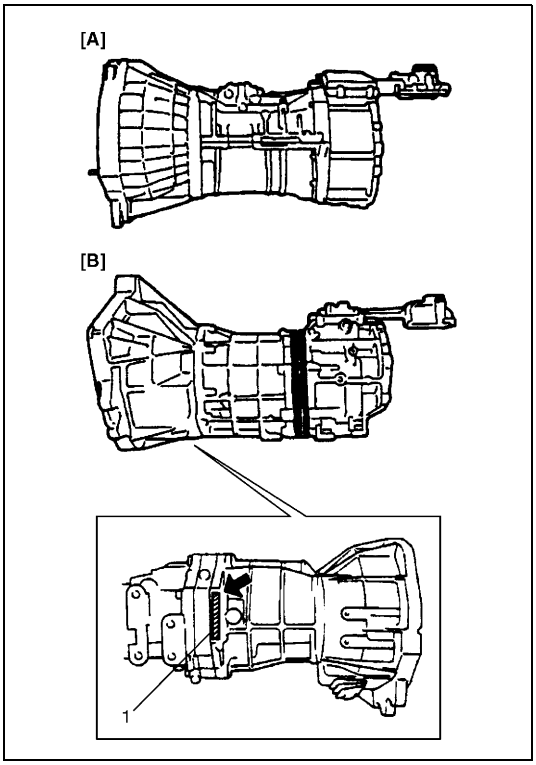

Check shape of transmission, and identify transmission as type 1 or type 2/type 3.
Wheather transmission type 2 or type 3 equipped with the vehicle, it can be identified by transmission identification number (1) and proceed to applicable section.

Transmission identification number	Transmission type	Applicable section
G*******	Type 2	Section 7A1
R*******	Type 3	Section 7A2

[A]:	Fig. for type 1 transmission
[B]:	Fig. for type 2 and type 3 transmissions

Transmission Case Components

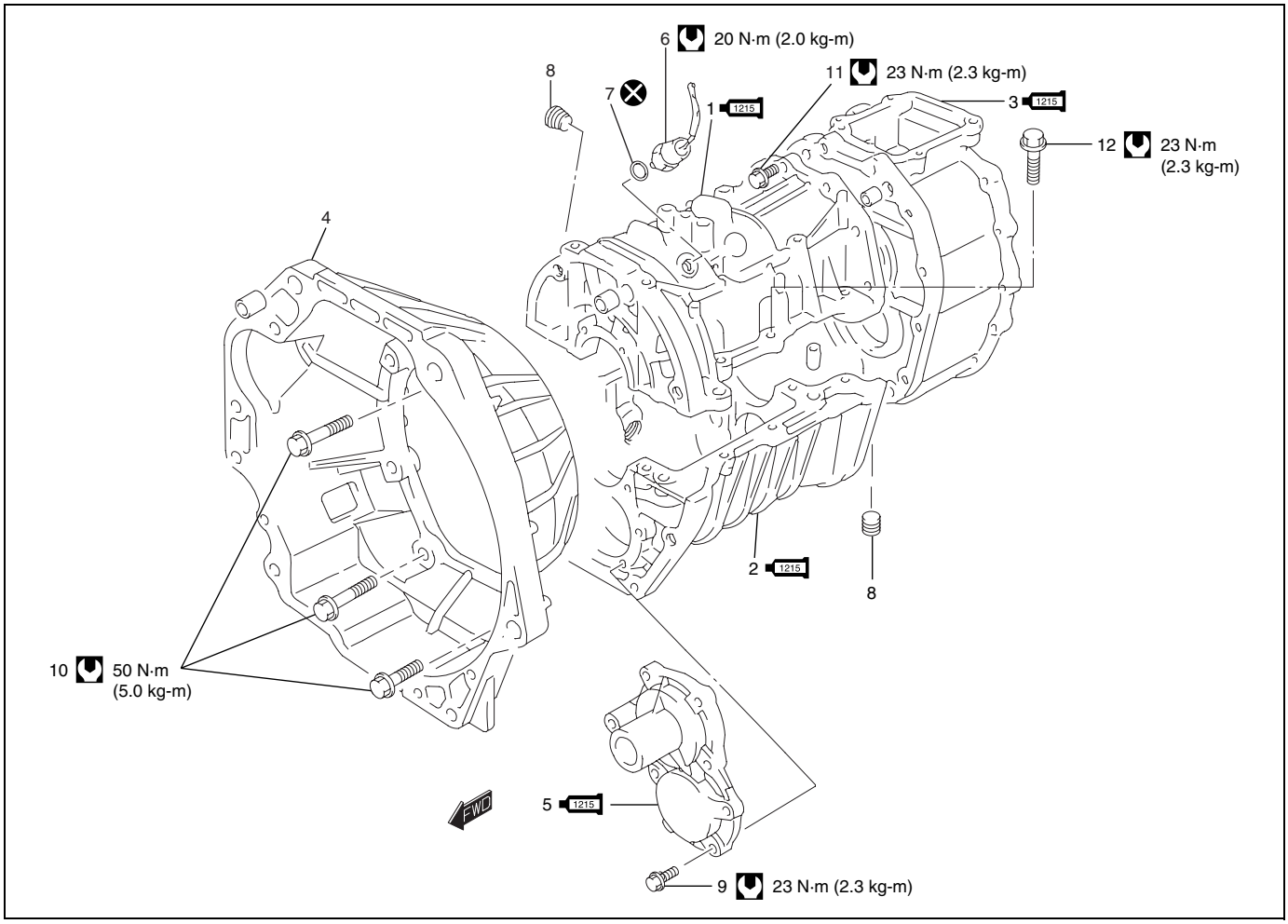

1215	1. Transmission upper case : Apply sealant 99000–31110 to mating surface to other transmission case.	6. Back up lamp switch	11. Upper case bolt
1215	2. Transmission lower case : Apply sealant 99000–31110 to mating surface to other transmission case.	7. O–ring	12. Rear case bolt
1215	3. Transmission rear case : Apply sealant 99000–31110 to mating surface to other transmission case.	8. Oil filter and drain plug	Tightening torque
	4. Clutch housing	9. Input shaft retainer bolt	Do not reuse
1215	5. Input shaft bearing retainer : Apply sealant 99000–31110 to mating surface to transmission case.	10. Clutch housing bolt	

Gear Shifter Components

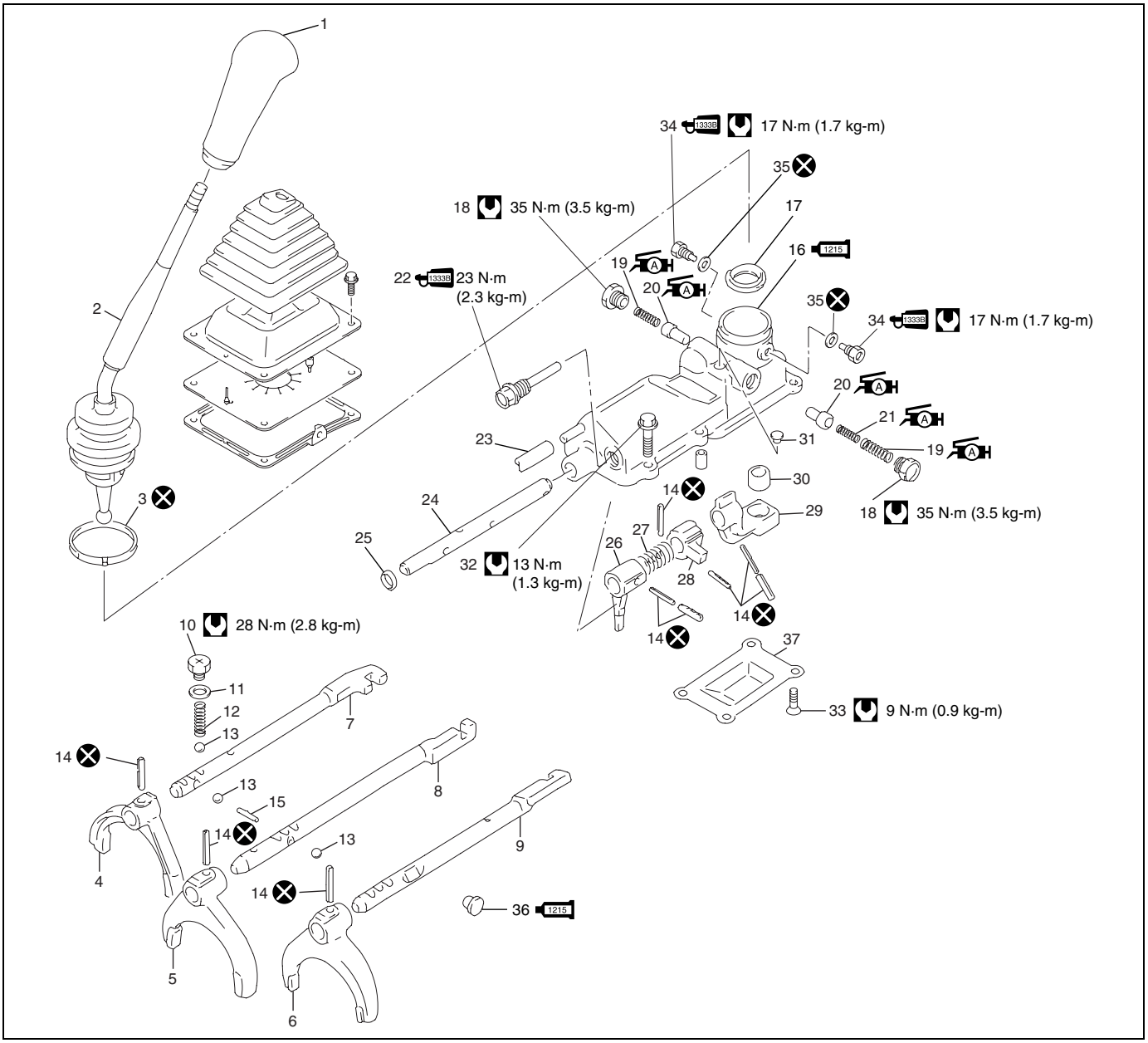

1. Gear shift control lever knob	14. Spring pin	27. Reverse gear shift limit spring
2. Gear shift control lever	15. Roller	28. Reverse gear shift limit yoke
3. Clamp	16. Gear shift lever case : Apply sealant 99000–31110 to mating surface to case plate.	29. Gear shift arm
4. Lower gear shift fork	17. Case seat	30. Gear control lever bush
5. High gear shift fork	18. Select return spring bolt	31. Plug
6. 5th reverse gear shift fork	19. Select return spring : Apply grease 99000–25010 to all around part of spring.	32. Gear shift case bolt
7. Lower gear shift shaft	20. Select guide pin : Apply grease 99000–25010 to all around part of pin.	33. Shift lever case plate screw
8. High gear shift shaft	21. Select return spring (inner) : Apply grease 99000–25010 to all around part of spring.	34. Control lever locating bolt : Apply thread lock 99000–31110 to all around thread part of bolt.
9. 5th reverse gear shif shaft	22. Reverse gear shift limit bolt : Apply thread lock 99000–31110 to all around thread part of bolt.	35. Lock washer
10. Plug	23. Breather hose	36. Rubber plug : Apply sealant 99000–31110 to mating surface to rubber plug.
11. Gasket	24. Gear shift shaft	37. Gear shift case plate
12. Locating spring	25. Case plug	Tightening torque
13. Locating ball	26. Gear shift lever	Do not reuse

Input and Counter Shaft Components

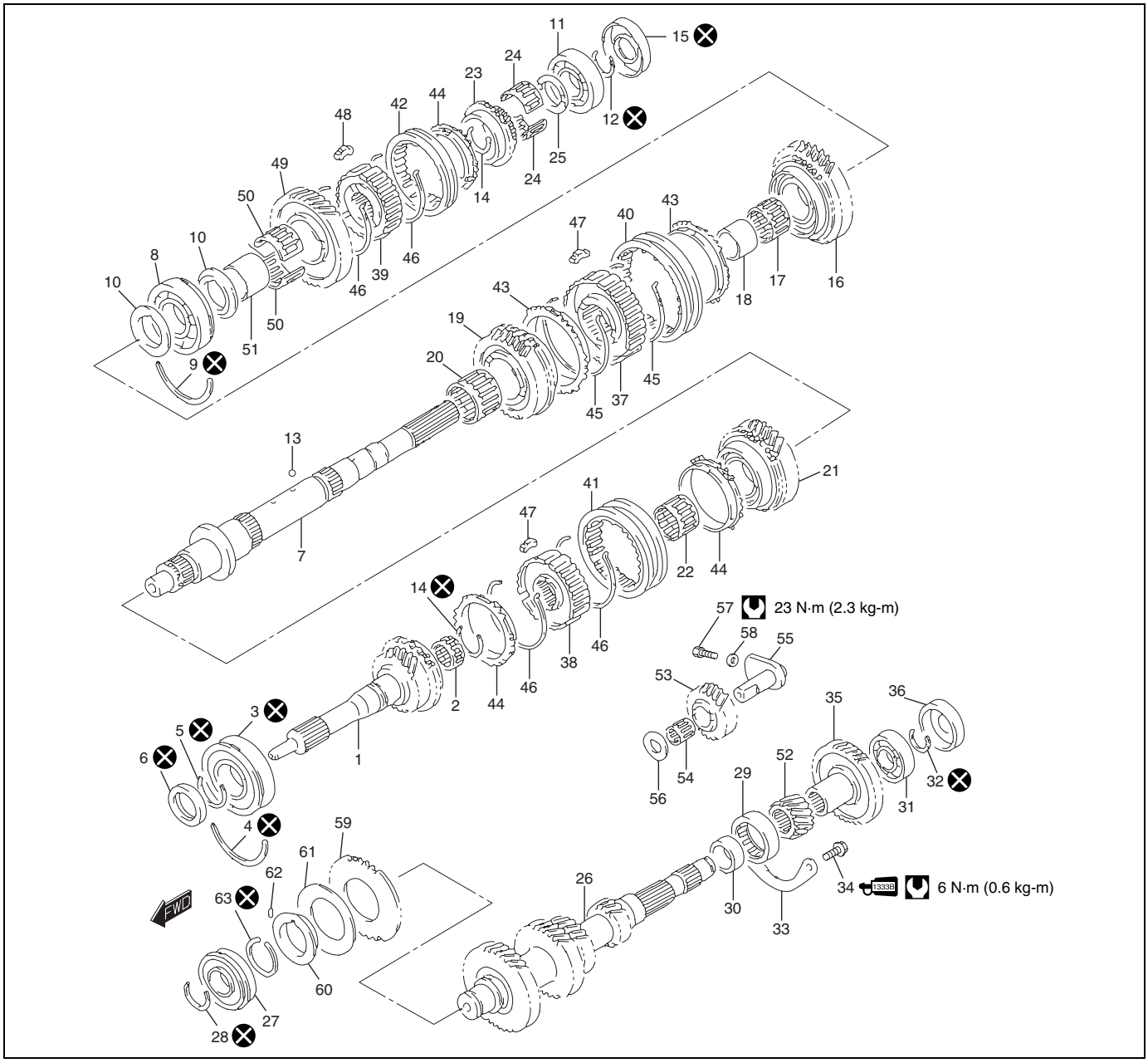

1. Input shaft	18. Low gear bush	35. Counter shaft 5th gear	52. Reverse gear
2. Needle bearing	19. 2nd gear	36. Counter shaft plug	53. Reverse idle gear
3. Input shaft bearing	20. Needle bearing	37. Low speed hub	54. Needle bearing
4. C–ring	21. 3rd gear	38. High speed hub	55. Idle gear shaft
5. Circlip	22. Needle bearing	39. Reverse hub	56. Thrust washer
6. Oil seal	23. Main shaft 5th gear	40. Low speed sleeve	57. Reverse idle gear shaft bolt
7. Main shaft	24. Needle bearing	41. High speed sleeve	58. Washer
8. Main shaft bearing	25. 5th gear washer	42. Reverse sleeve	59. Friction gear
9. C–ring	26. Counter shaft	43. Low speed ring	60. Friction gear retainer
10. Bearing washer	27. Front bearing	44. High speed ring	61. Friction gear spring
11. Rear bearing	28. Circlip	45. Low speed spring	62. Pin
12. Circlip	29. Center bearing	46. High speed spring	63. Circlip
13. Ball	30. Bush	47. Synchronizer key	Tightening torque
14. Circlip	31. Rear bearing	48. 5th synchronizer key	Do not reuse
15. Oil seal	32. Circlip	49. Reverse gear	
16. Low gear	33. Bearing plate	50. Needle bearing	
17. Needle bearing	1333B 34. Bearing plate bolt : Apply thread lock 99000–31110 to all around thread part of bolt	51. Bush	

Unit Disassembly

Gear Shift Lever Case (4WD Model)

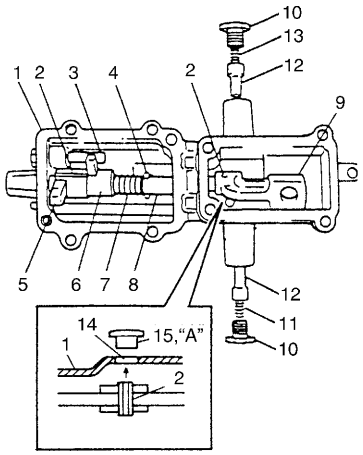

1) Remove 4 screws with screwdriver and remove case plate.
2) With case (1) supported with soft jawed vise, remove select return spring bolt (10) with wrench.

NOTE:

Use aluminum plates between vise and case to protect case (1) against damage.

3) Using spring pin remover, drive out double spring pin (2) for gear shift arm (9).

NOTE:

Double spring pin (2) can be driven out through the hole (14) after removing its plug (15). After removing the double spring pin (2), apply sealant to the plug (15) and install it.

"A": Sealant 99000-31110

NOTE:

All spring pin (except double spring pin (2)) can be driven out only in such direction that it comes out toward the deeper side of the shift lever case (1).

4) Drive out spring pin (4) for reverse gear shift limit spring (7).
5) Drive out double spring pin (2) for gear shift lever (5).
6) Pull out gear shift shaft (8) a little and take out gear shift arm (9).

NOTE:

- **Case plug may come off during above work.**
- **If it is not possible to take out gear shift arm in above step 6, do it after following steps 7 and 8.**

7) Push gear shift shaft inward and drive out spring pin for reverse gear shift limit yoke (6).
8) Pull out gear shift shaft (8) from case (1).

3.	Reverse gear shift limit bolt
11.	Select return inner and outer spring (double coil spring)
12.	Select guide pin
13.	Select return outer spring

Gear Shift Lever Case (2WD Model)

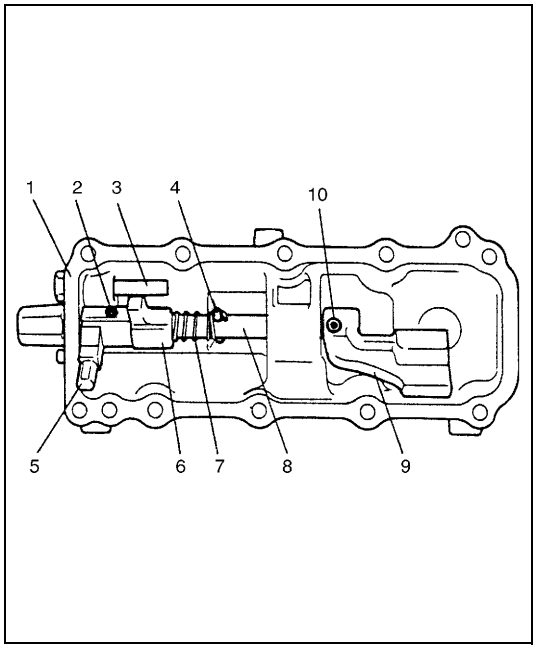

1) Using spring pin remover, drive out double spring pin (10) for gear shift arm (9).
2) Drive out spring pin (4) for reverse gear shift limit spring (7).
3) Drive out double spring pin (2) for gear shift lever (5).
4) Pull out gear shift shaft (8) a little and take out gear shift arm (9).

NOTE:

- **Case plug may come off during above work.**
- **If it is not possible to take out gear shift arm (9) in above step 4, do it after following steps 5 and 6.**

5) Push gear shift shaft (8) inward and drive out spring pin for reverse gear shift limit yoke (6).
6) Pull out gear shift shaft (8) from case (1).

3. Reverse gear shift limit bolt

Transmission Unit

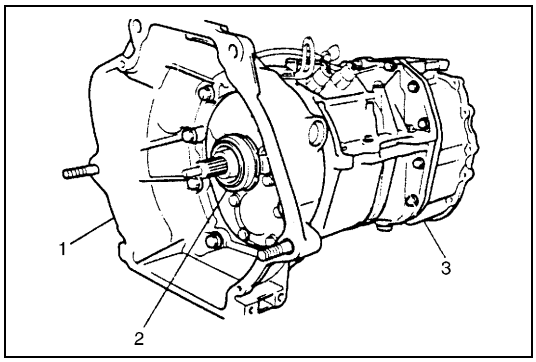

1) Remove 12 fastening bolts and separate rear case (3).
2) Remove clutch release bearing (2).
3) Remove 8 clutch housing bolts and then remove clutch housing (1).

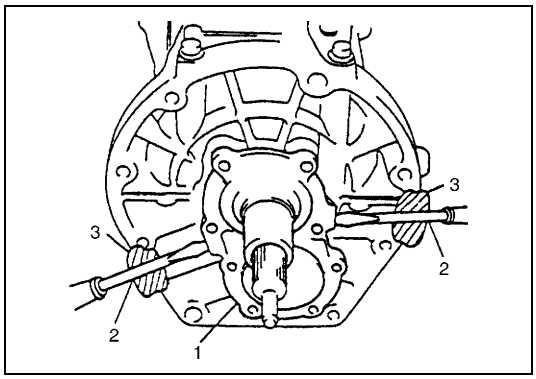

4) Remove 8 bolts and pull out input shaft bearing retainer (1) by using large size screwdrivers (2) and clean cloth (3).

CAUTION:

When pulling out, do not scratch the transmission case surface contacting with the clutch housing.

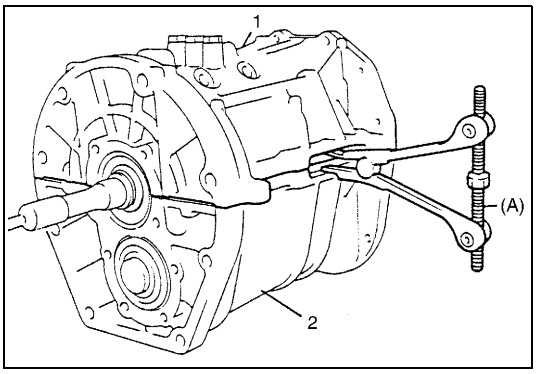

5) Remove 10 bolts and separate cases (1,2) by using special tool.

Special tool
(A): 09912-34510

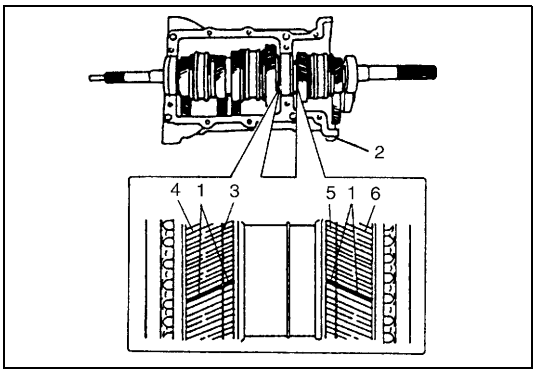

6) If equipped with scissors gears (3,5), put match mark (1) (paint) on teeth of low (4) and reverse (6) gear assembly as shown in the figure before taking out input and main shaft assembly from lower case (2).

7) Take out input and main shaft assembly.

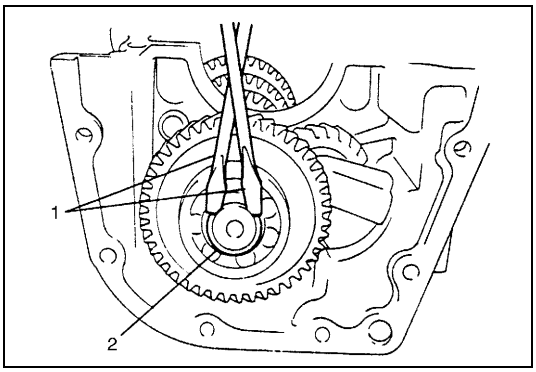

8) Remove bearing circlip (2) at the rear part of counter shaft by using screwdriver (1).

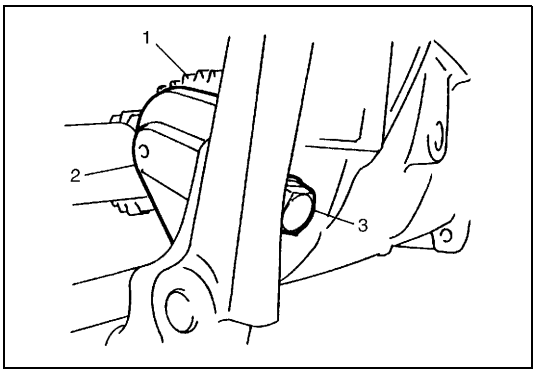

9) Remove bolt (3) for reverse idle gear shaft (2) and then remove idle gear (1) and shaft (2) as a set.

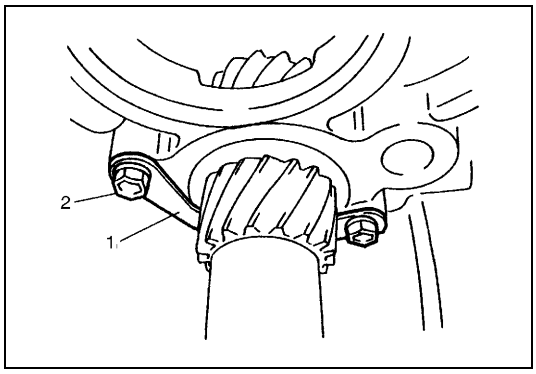

10) Remove center bearing plate (1) by removing its 2 bolts (2).

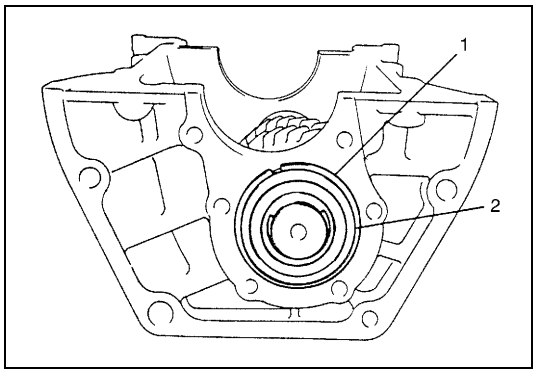

11) Remove outside circlip (1) of front bearing (2) on counter shaft.

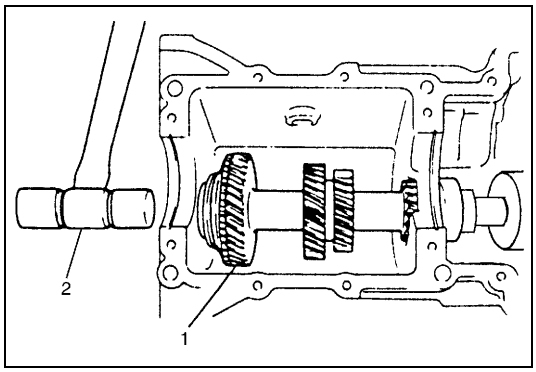

12) Using plastic hammer (2), drive counter shaft (1) rearward.

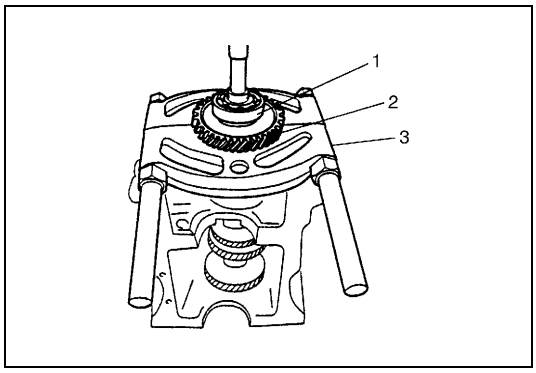

13) Pull out 5th gear (2) and rear bearing (1) with bearing puller (3) and press.

NOTE:

- **Apply pressing force while adjusting position of front bearing so that it will fit in its original position (hole in lower case).**
- **Be sure to set flat face of puller (3) against 5th gear so as not to cause damage to teeth.**

14) In the same manner as 12), drive counter shaft rearward again.

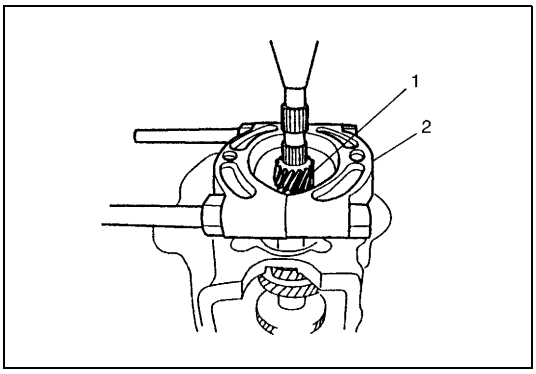

15) Pull out reverse gear (1) with bearing puller (2) and press.

16) Pull out roller bearing by hand and then remove shaft from lower case.

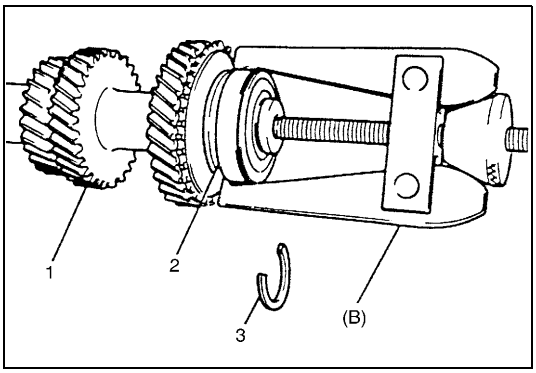

17) Remove circlip (3) of counter shaft (1) front bearing (2) and pull out bearing (2) by using puller.

Special tool
(B): 09913-60910

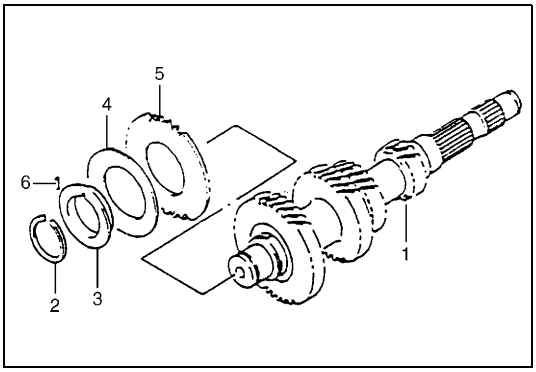

18) Remove circlip (2), friction gear retainer (3), friction gear spring (4), friction gear (5) and pin (6) from counter shaft (1) in that order.

Sub-Assembly

Input shaft

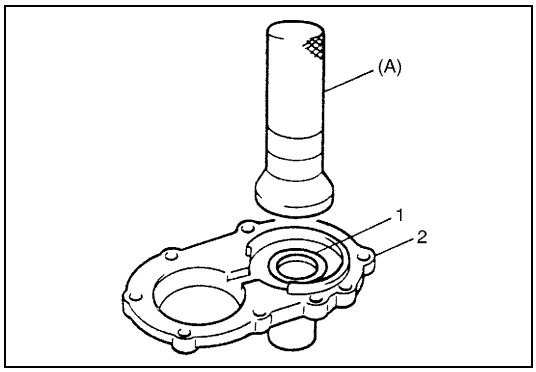

1) Take out oil seal (1) from input shaft oil seal retainer (2) and install new oil seal (1) with special tool and hammer up to case surface.
   Unless oil seal (1) is leaky or its lip is excessively hardened, replacement is unnecessary.

Special tool
(A): 09913-84510

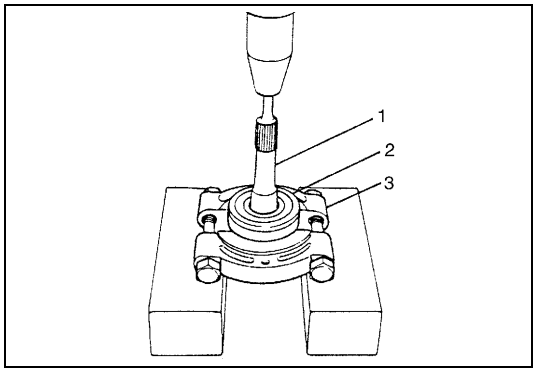

2) Remove circlip of input shaft (1) and pull out bearing (2) with bearing puller (3) and press as necessary.

NOTE:
Sealed bearing must not be washed. Replace it with new one when required.

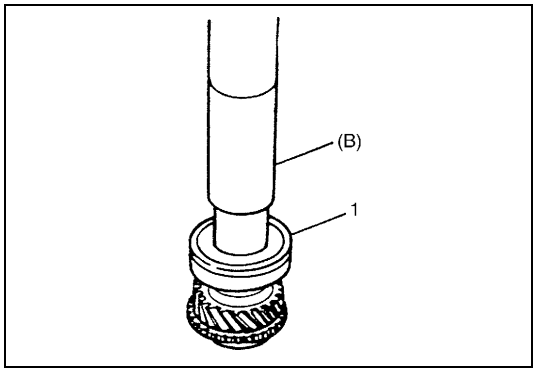

3) When installing bearing (1), bring it so that its groove for circlip is in the front and press-fit with special tool and press.

Special tool
(B): 09925-18011

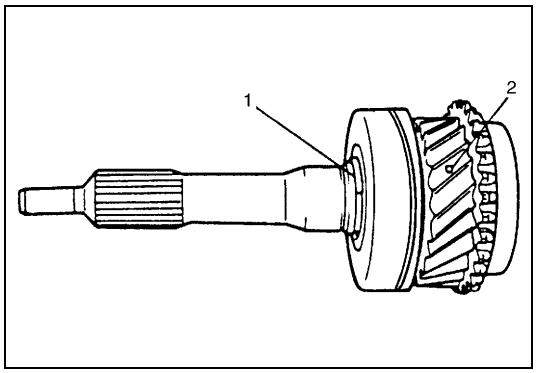

4) After fitting circlip (1), air-blow lubrication oil hole (2).

Main shaft

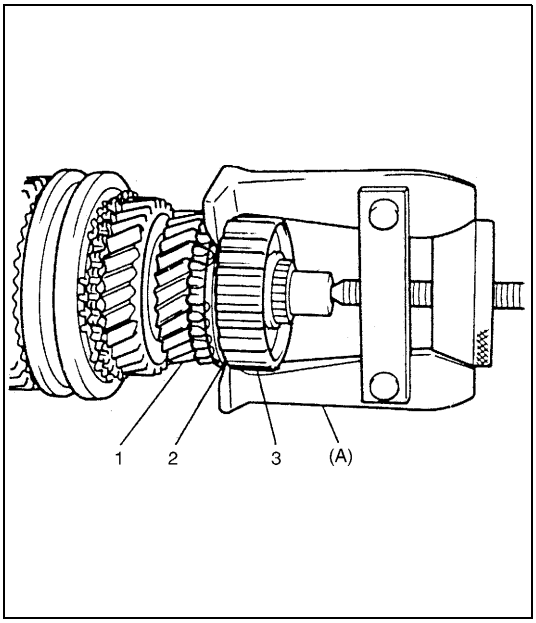

1) After removing needle bearing for input shaft at the front end of main shaft, pull out high speed sleeve from its hub (3) and remove 3 synchronizer keys.
2) Remove circlip in front of hub (3) and pull off hub (3) with special tool, then take out synchronizer springs.

Special tool
(A): 09913-61510

3) Remove 3rd synchronizer ring (2), 3rd gear (1) and needle bearing.

NOTE:

High speed sleeve-hub assembly, synchronizer ring (2) and 3rd gear (1) can be removed all at once by using puller and hydraulic press.

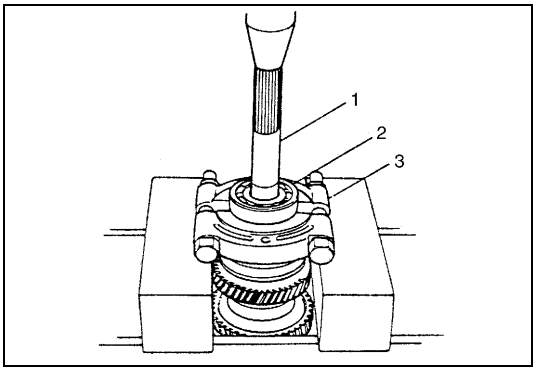

4) Remove circlip in the rear part of main shaft (1) and pull off rear bearing (2) with bearing puller (3) and press.

5) Remove thrust washer and steel ball and then remove 5th gear, synchronizer ring and needle bearing.

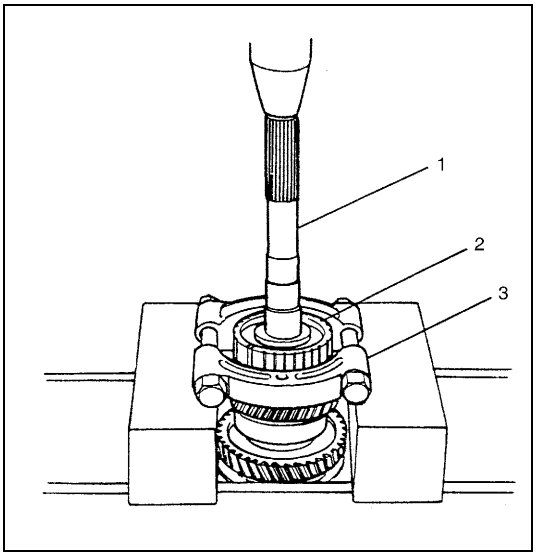

6) Pull out reverse sleeve from its hub (2) and remove 3 synchronizer keys.
7) Remove circlip and pull off reverse hub (2) from main shaft (1) with bearing puller (3) and press, then take out synchronizer springs.

NOTE:

It is also possible to remove reverse sleeve-hub as assembly and reverse gear all at once by using puller and press, after removing circlip.

8) Remove main shaft reverse gear and needle bearing by hand.

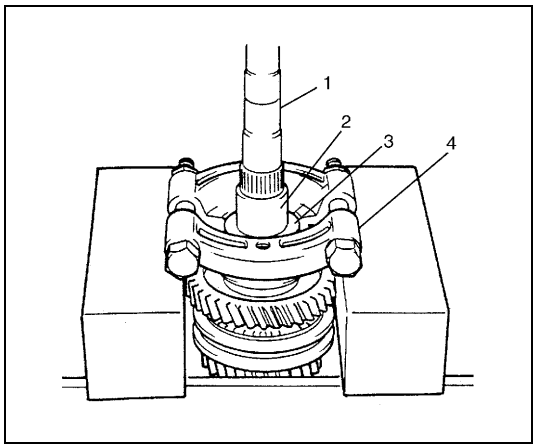

9) Using bearing puller (4) and press, remove reverse gear bush (2) and bearing washer (3) from main shaft (1).

NOTE:

During above work, watch out for steel ball which will come out from inside of washer so as not to lose it.

CAUTION:

Do not attempt to pull out bearing, washer (3) and bush (2) all together at once. Steel ball would stop bearing and cause damage to it.

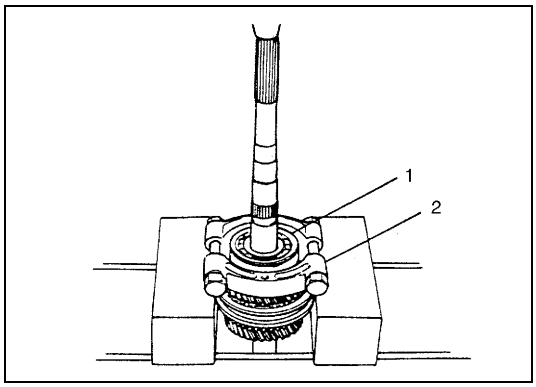

10) Pull off bearing (1) with bearing puller (2) and press.

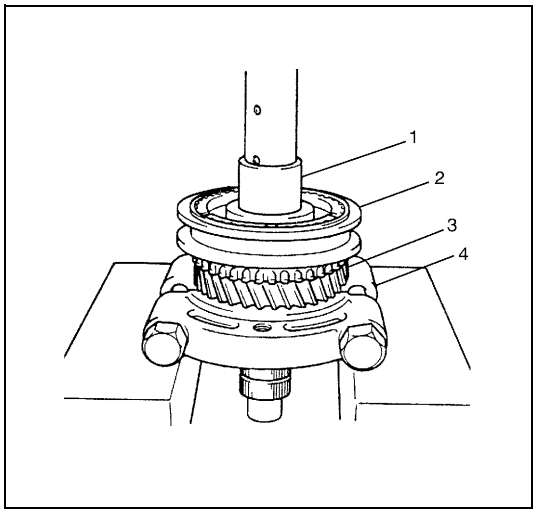

11) Remove the following in that order: bearing washer, steel ball, low gear, low synchronizer ring, needle bearing and low gear bush (1).
12) Using bearing puller (4) and press, pull out low speed sleeve and hub assembly (2), 2nd gear (3) and 2nd synchronizer ring all together.

NOTE:

If bush can't be pulled out by hand at step 11), pull off sleeve and hub together by using press.

13) Remove sleeve from hub and then take off synchronizer keys and springs.

Upper case and shifter

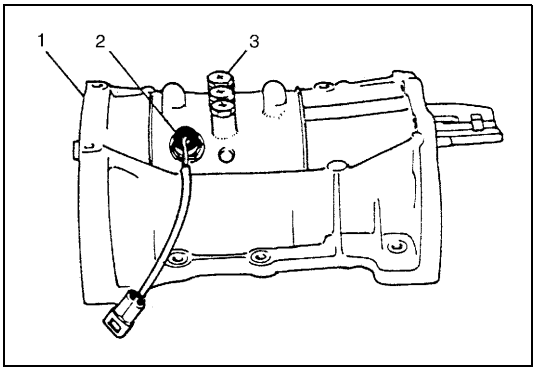

1) Remove back up light switch (2) and locating spring bolts (3) from upper case (1).
2) Take out locating springs and locating balls.

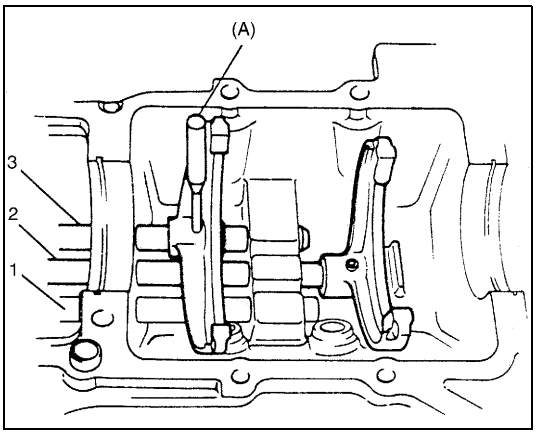

3) Remove 2 spring pins and pull out low speed gear shift shaft (3) and high speed gear shift shaft (2) in that order.
4) Pull out reverse gear shift shaft (1), then disconnect fork from shaft (1) by removing spring pin.

Special tool
(A): 09922-85811

NOTE:

Make sure that remaining gear shift shafts are all neutral position when removing a gear shift shaft.

5) Take out rubber plug and 2 interlock balls from case.
6) Remove interlock pin from high speed gear shift shaft.

Component Inspection

Counter Shaft and Main Shaft Inner Parts

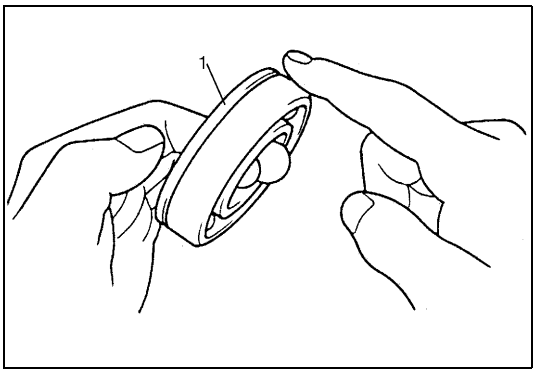

- Check tooth surface of gear and rotation of bearing (1) and replace with new one if necessary. As long as no abnormal condition such as noise exists before removal, replacement is unnecessary.

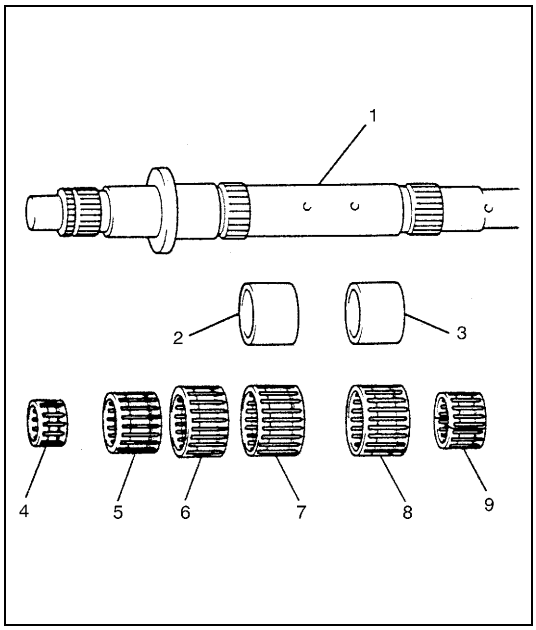

- Inspect needle bearings and needle contacting surfaces (rotating surfaces) and replace with new ones as required.

NOTE:

Should abnormal noise be heard before disassembly, it is necessary to carefully check needle contacting surface inside of each gear besides those parts shown in the figure.

1.	Main shaft
2.	Low gear bush - identical
3.	Reverse gear bush - identical
4.	Input shaft needle bearing
5.	3rd gear needle bearing
6.	2nd gear needle bearing - identical
7.	Low gear needle bearing - identical
8.	Reverse gear needle bearing (2 pieces)
9.	5th gear needle bearing (2 pieces)

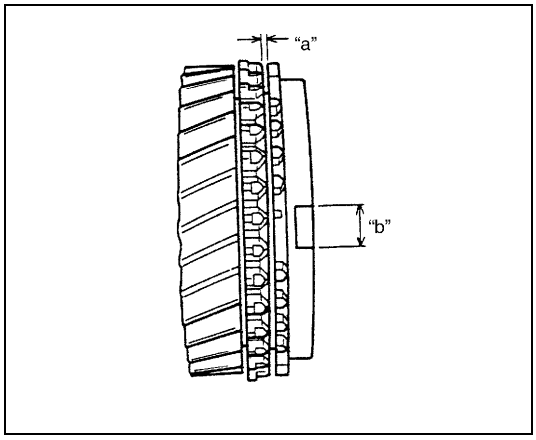

- Check clearance "a" between synchronizer ring and gear, key slot width "b" in synchronizer ring and each chamfered tooth of gear and synchronizer ring and replace with new one, if necessary. Also, check gear tooth.

Clearance "a" between synchronizer ring and gear
Standard: 1.0 – 1.4 mm (0.039 – 0.055 in.)
Service limit: 0.5 mm (0.019 in.)

Key slot width "b"
Standard: 10.1 mm (0.397 in.)
Service limit: 10.4 mm (0.409 in.)

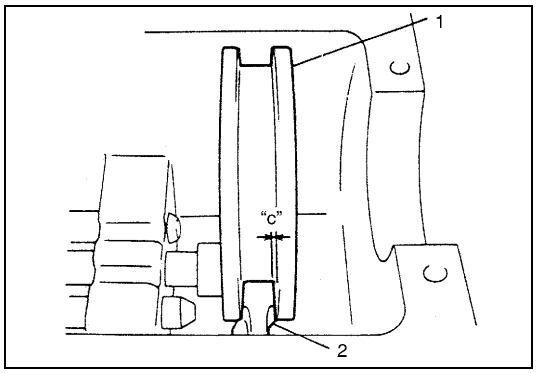

- Using feeler gauge, check clearance between sleeve (1) and shifter fork (2) and replace parts if necessary.

Clearance "c" between sleeve and shifter fork
Maximum 1.0 mm (0.039 in.)

- Check chamfered part of each sleeve for damage and excessive wear, and replace as necessary.
- Check each synchronizer key and synchronizer spring and replace as necessary.
- Check splined portions and replace parts if excessive wear are found.

Low and reverse scissors gear assemblies (if equipped)

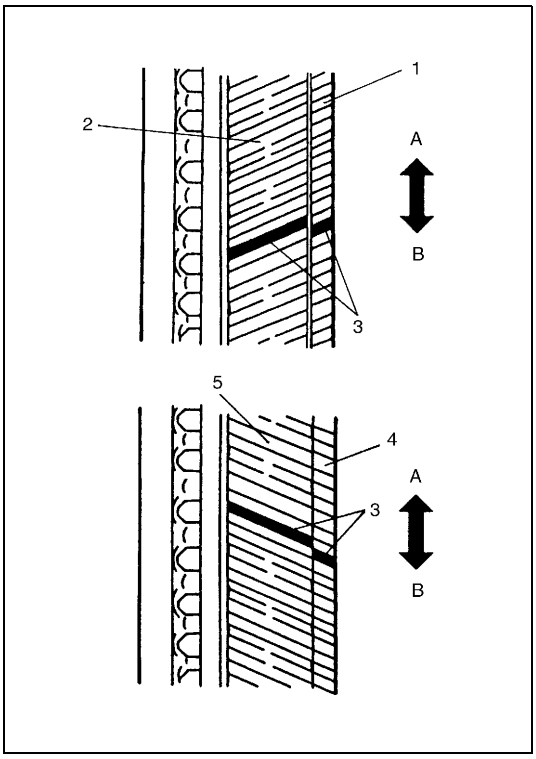

Check for the following items.

- Match mark (3) provided for reassembly should be almost at such position as shown in the figure.
- Try to turn scissors gear against main shaft low (and reverse) gear. It should feel light when turned in “A” direction but heavy when turned in “B” direction.
- Play of scissors gear against main shaft low (or reverse) gear in “A” – “B” direction should be about half of tooth width as shown in the figure.

If any faulty condition is noted, remove snap ring, open up assembly unit and check that all components are installed at proper positions. If all components are positioned properly and yet faulty condition exists, replace the low (reverse) gear assembly.

1.	Scissors low gear
2.	Main shaft low gear
4.	Scissors reverse gear
5.	Main shaft reverse gear

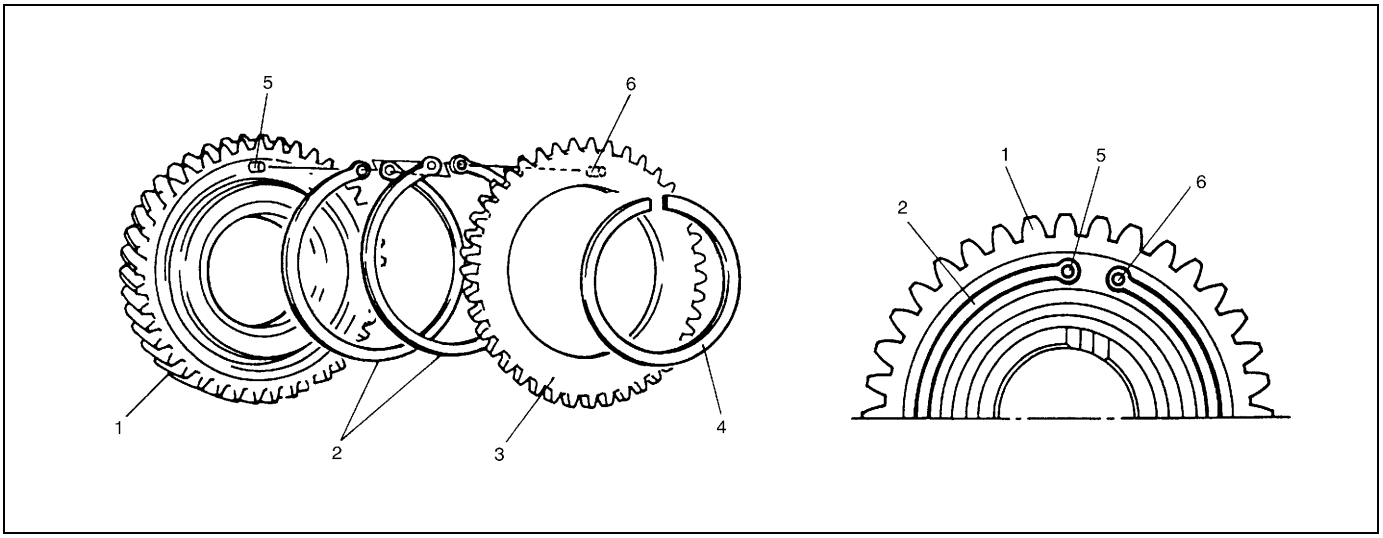

1.	Main shaft (low or reverse) gear
2.	Scissors (low or reverse) gear spring
3.	Scissors (low or reverse) gear
4.	Snap ring
5.	Pin (Main gear side)
6.	Pin (scissors gear side)

Upper Case and Shifter

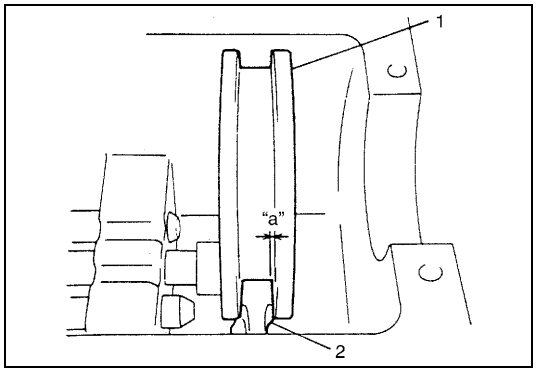

- Using feeler gauge, check clearance between fork (2) and sleeve (1) and replace those parts if it exceeds limit.

Clearance "a" between fork and sleeve
Service limit: 1.0 mm (0.039 in.)

- Insert each gear shift shaft into case and check that it moves smoothly. If it doesn't, correct by using oilstone, reamer or the like.

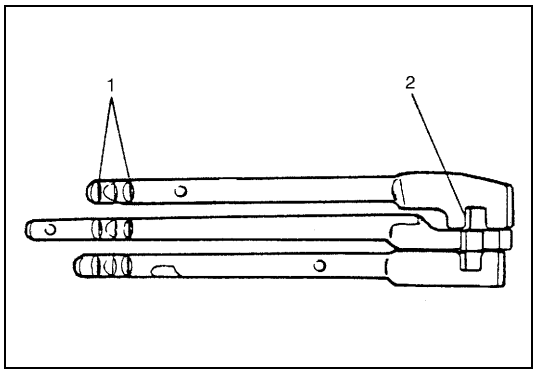

- Check gear shift shaft for excessive wear and correct or replace a necessary.

1.	Locating groove
2.	Yoke portion

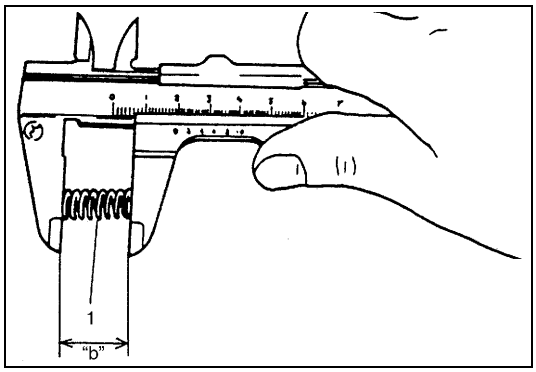

- Check free length of each locating spring (1) and replace if it is below service limit.

Locating spring free length "b"
Standard: 27.0 mm (1.063 in.)
Service limit: 24.0 mm (0.945 in.)

Rear Case

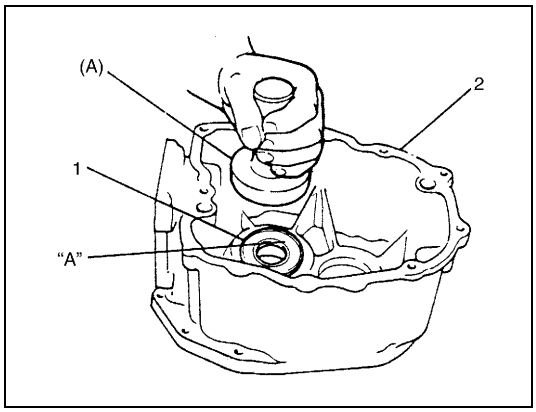

- If oil seal (1) leaks and/or its lip is excessively hardened, replace it with new one and at the same time, check main shaft where oil seal contacts. If contacting surface is not smooth, correct or replace. Apply grease to oil seal lip portion.

Grease "A": 99000-25010

Special tool
(A): 09913-75510

2.	Rear case

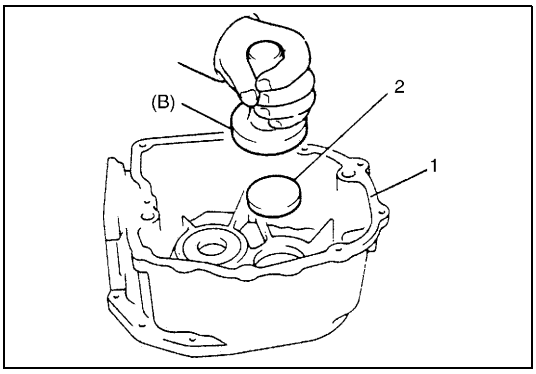

- If oil leakage exists at counter shaft end plug (2), replace it.

Special tool
(B): 09913-75520

1. Rear case

Unit Assembly

Gear Shift Lever Case (4WD Model)

1) Wash and inspect each part and replace if necessary. Also check items as described below and correct whatever necessary carefully by using reamer, oilstone and the like, wash it thoroughly and reassemble them.
   Items to be checked are;
- Shift shaft should go into case smoothly.
- Shift lever, limit yoke and shift arm should go into shift shaft smoothly.

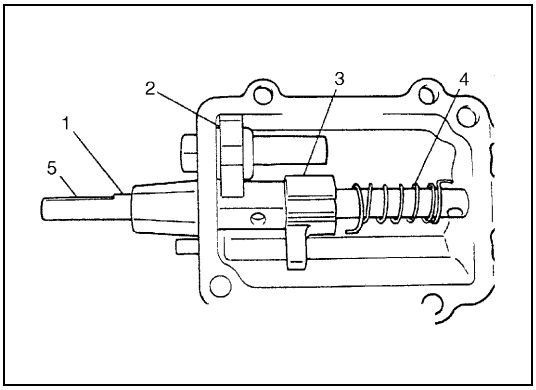

2) Insert shift shaft (1) as shown while making sure that inner parts are in proper direction.

NOTE:
- **Cut off portion (5) in shift shaft should face downward when shift shaft (1) is installed.**
- **Use care for installing direction of shift limit spring (4).**
- **Shift arm should be installed at the same time.**

2. Shift lever
3. Shift limit yoke

3) Drive in spring pin (single short) for reverse gear shift limit yoke.
4) Drive in spring pin (double) for shift lever.
5) Drive in spring pin (single long) for return spring.

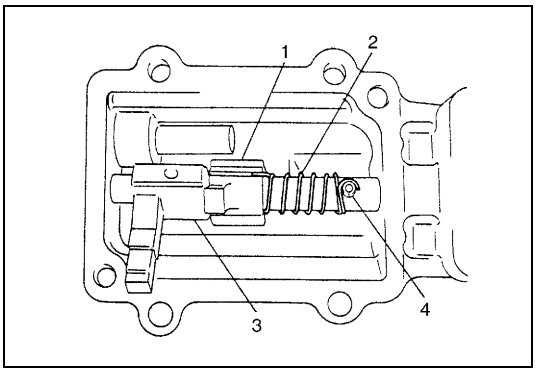

6) Fit straight end of shift limit spring (2) into line groove in shift limit yoke (1) and with its other hooked end turned in its winding direction by about 90° from its free state, hook it on spring pin (4).

3. Shift lever

7) Drive in spring pin for shift arm.

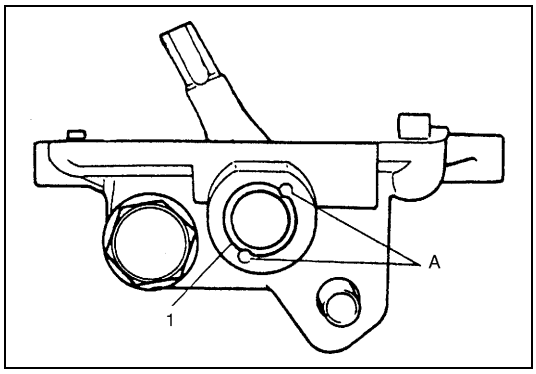

8) Press-fit case plug (1) into case.

A: Caulking

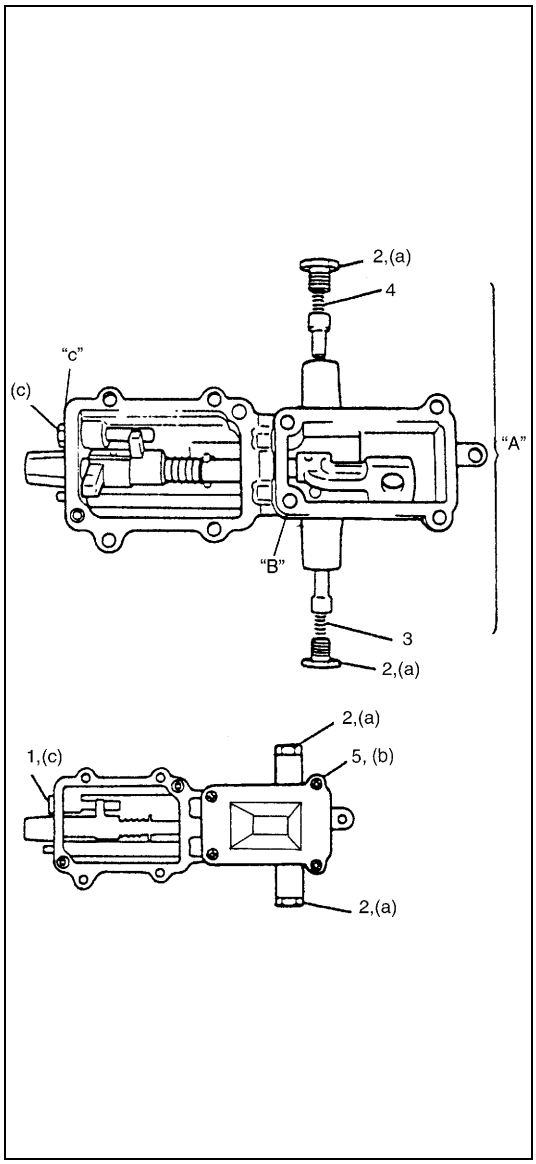

9) After applying grease "A", install select guide pins, select return springs and spring bolts (2) and torque them to specification.

"A": Grease 99000-25010

Tightening torque
Select return spring bolt
(a): 35 N·m (3.5 kg-m, 25.5 lb-ft)

NOTE:

Double coil spring is required at 5th/Reverse select side.

10) Clean mating surfaces of both case plate and case, apply sealant "B" to case side evenly, mate them and fasten with screws (5).

"B": Sealant 99000-31110

Tightening torque
Shift lever case plate screws
(b): 9 N·m (0.9 kg-m, 6.5 lb-ft)

11) If reverse gear shift limit bolt (1) has been removed, apply thread lock cement "C" to bolt then install and torque it to specification.

"C": Thread lock cement: 99000-32020

Tightening torque
Reverse gear shift limit bolt
(c): 23 N·m (2.3 kg-m, 17.0 lb-ft)

3. Inner and outer spring (Double coil spring)
4. Outer spring

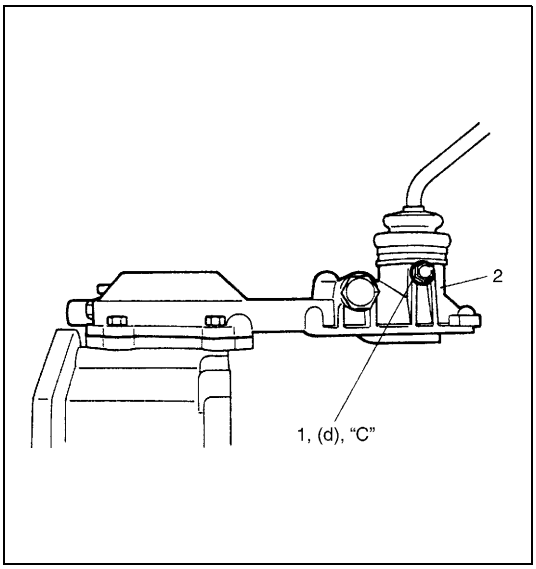

12) Install gear shift lever case (2) to transmission without using sealant for functional check.
13) Install shift control lever and check to make sure that it shifts smoothly according to shift pattern.

NOTE:

- **Apply thread lock cement "C" to control lever locating bolts (1) when replaced.**
- **Be sure to apply sealant to mating surface of gear shift lever for its final installation.**

"C": Cement 99000-32020

Tightening torque
Control lever locating bolt
(d): 17 N·m (1.7 kg-m, 12.5 lb-ft)

Gear Shift Lever Case (2WD Model)

1) Wash and inspect each part and replace if necessary. Also check items as described below and correct whatever necessary carefully by using reamer, oilstone and the like, wash it thoroughly and reassemble them.
   Items to be checked are;
- Shift shaft should go into case smoothly.
- Shift lever, limit yoke and shift arm should go into shift shaft smoothly.

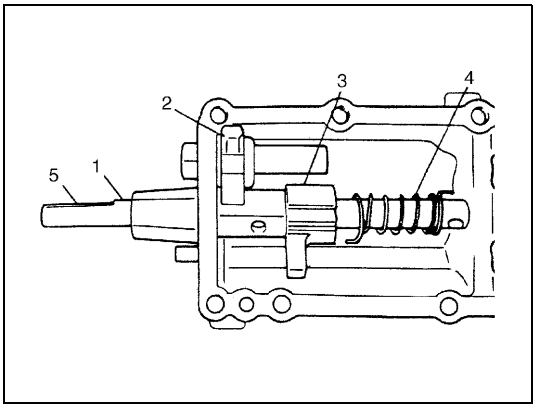

2) Insert shift shaft (1) as shown while making sure that inner parts are in proper direction.

NOTE:

- **Cut off portion (5) in shift shaft should face downward when shift shaft (1) is installed.**
- **Use care for installing direction of shift limit spring (4).**
- **Shift arm should be installed at the same time.**

2.	Shift lever
3.	Shift limit yoke

3) Drive in spring pin (single short) for reverse gear shift limit yoke.
4) Drive in spring pin (double) for shift lever.
5) Drive in spring pin (single long) for return spring.

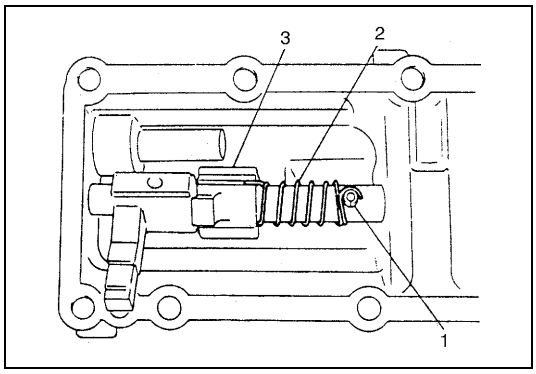

6) Fit straight end of shift limit spring (2) into line groove in shift limit yoke (3) and with its other hooked end turned in its winding direction by about 90° from its free state, hook it on spring pin (1).

7) Drive in spring pin for shift arm.

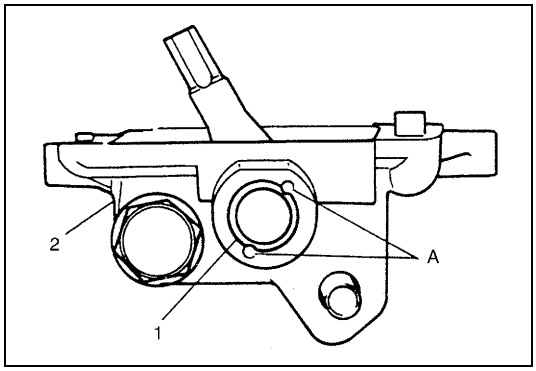

8) Press-fit case plug (1) into case (2) and caulk it with punch.

"A": Caulking

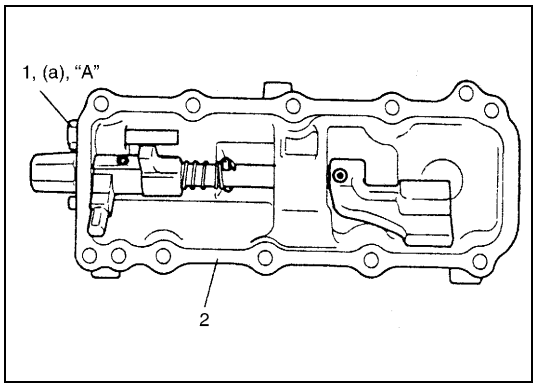

9) If reverse gear shift limit bolt (1) has been removed, apply thread lock cement "A" to bolt then install and torque it to specification.

"A": Cement 99000-32020

Tightening torque
Reverse gear shift limit bolt
(a): 23 N·m (2.3 kg-m, 17.0 lb-ft)

2. Gear shift lever case

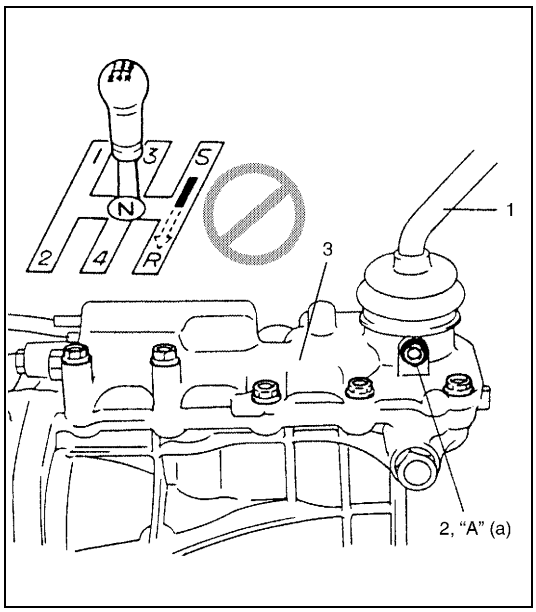

10) Install gear shift lever case (3) to transmission without using sealant for functional check.
11) Install shift control lever (1) and check to make sure that it shifts smoothly according to shift pattern as shown in the figure.

NOTE:

- **Apply thread lock cement "A" to control lever locating bolts (2) when replaced.**
- **Be sure to apply sealant to mating surface of gear shift lever case (3) for its final installation.**

"A": Cement 99000-32020

Tightening torque
Control lever locating bolt
(a): 17 N·m (1.7 kg-m, 12.5 lb-ft)

Sub Assembly

Main shaft

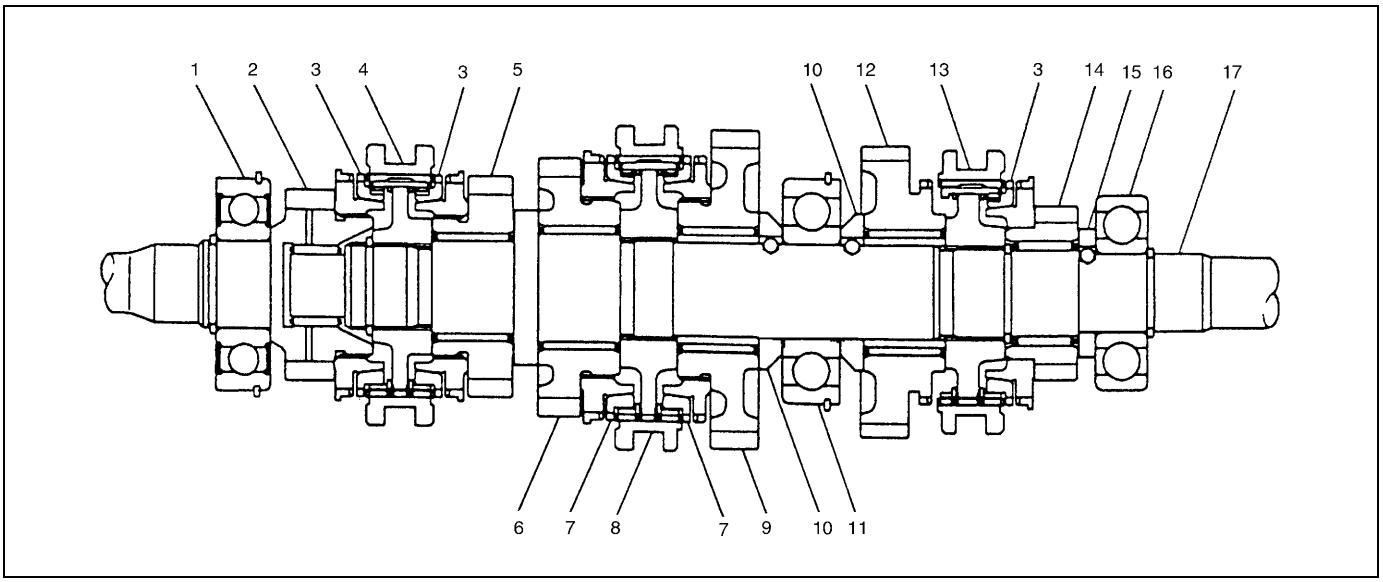

1. Input shaft bearing	7. Synchronizer low speed ring	13. Synchronizer reverse sleeve and hub assembly
2. Input shaft	8. Synchronizer low speed sleeve and hub assembly	14. 5th gear
3. Synchronizer high speed ring	9. Low gear	15. 5th gear washer
4. Synchronizer high speed sleeve and hub assembly	10. Bearing washer	16. Rear bearing
5. 3rd gear	11. Main shaft bearing	17. Main shaft
6. 2nd gear	12. Reverse gear	

NOTE:

- **Before installation, wash each part and apply specified gear oil to sliding faces of bearing and gear.**
- **Use new circlips on shaft for reinstallation. Don't reuse used circlips.**

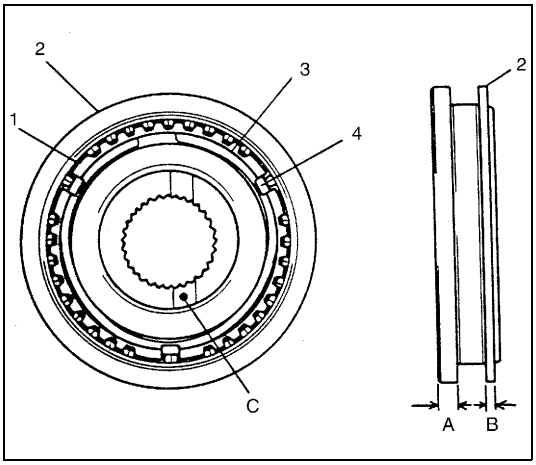

1) Fit sleeve to low speed hub (1), place 3 synchronizer keys (4) in it and set synchronizer spring (3).
   Refer to the figure for proper installing direction of hub (1), sleeve (2) and springs (3). Synchronizer key (4) has no specific direction for installation.

NOTE:

When installing each synchronizer spring, insert its hooked end to hub hole and put it toward right.

A:	Thick (2nd and front side)
B:	Thin (Low and rear side)
C:	Punch mark (Low and rear side)

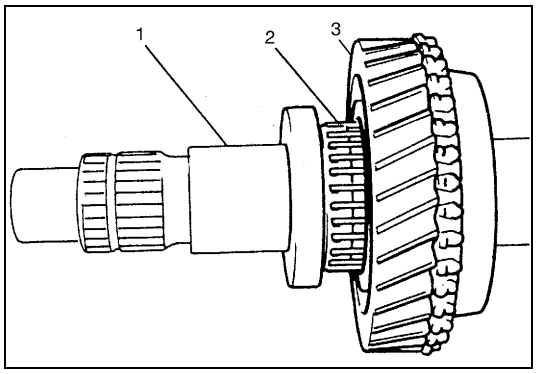

2) Install needle bearing (2), 2nd gear (3) and 2nd synchronizer ring to main shaft (1).

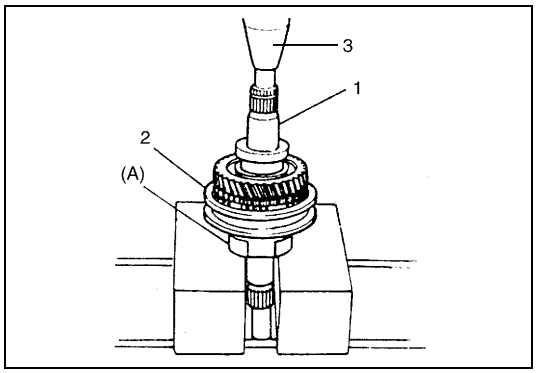

3) Press-fit low speed sleeve and hub assembly (2) onto main shaft (1) with press (3).

Special tool
(A): 09927-08210

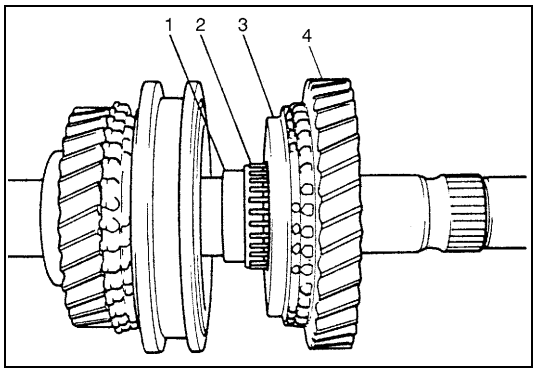

4) Insert low gear bush (1) and set synchronizer ring (3), needle bearing (2) and low gear (4).

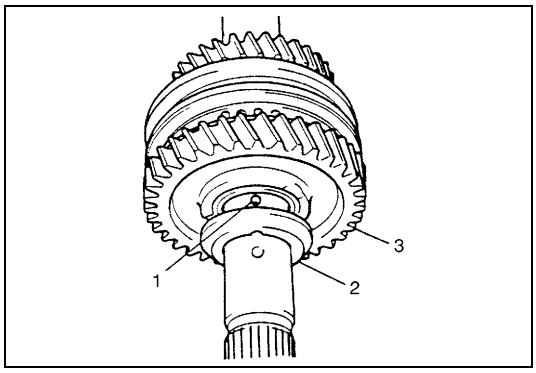

5) Set steel ball (1) and washer (2).

3. Low gear

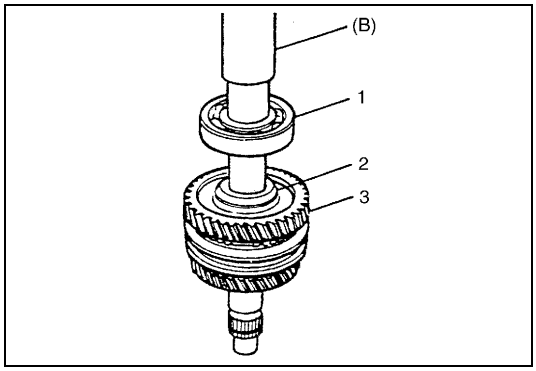

6) Using special tool and press, press-fit bearing (1).

Special tool
(B): 09925-18011

2. Washer
3. Low gear

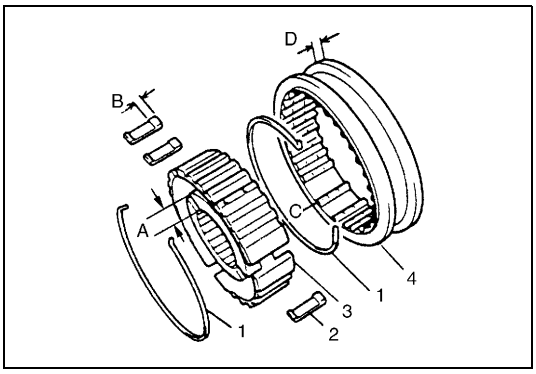

7) Fit sleeve (4) to reverse hub (3), place 3 synchronizer keys (2) in it and then set synchronizer springs (1). Refer to the figure for proper installing direction of hub (3), sleeve (4) and springs (1). Also, note that key (2) has specific installing direction.

A:	Reverse side (thin)
B:	5th side (thick)
C:	Key position
D:	5th side (thick)

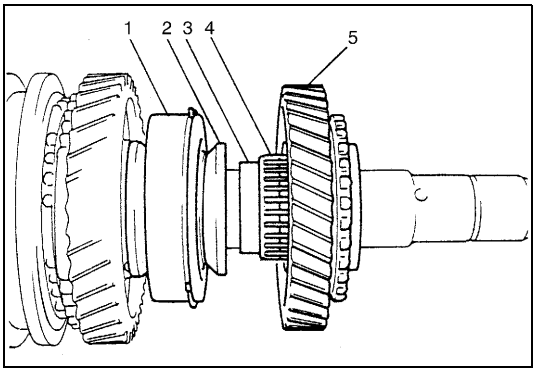

8) Set steel ball and bearing washer (2) and insert reverse gear bush (3), needle bearing (4) and reverse gear (5).

1.	Bearing

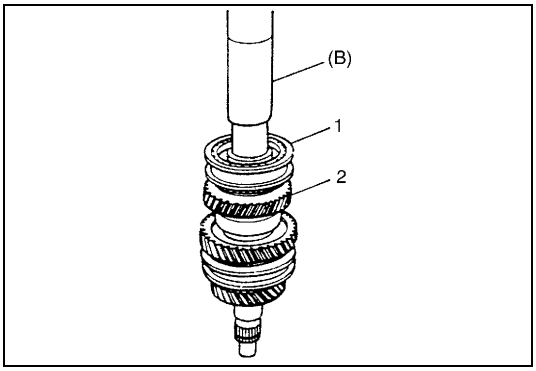

9) Press-fit reverse sleeve and hub assembly (1) with special tool and press.

Special tool
(B): 09925-18011

2.	Reverse gear

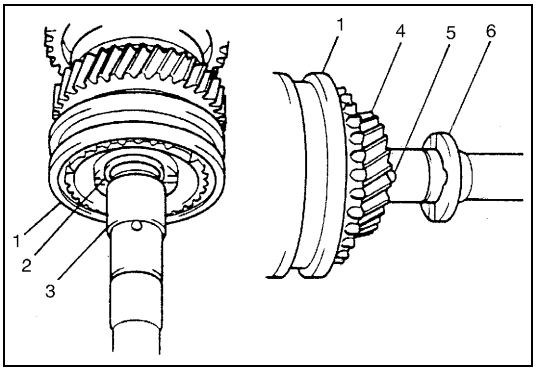

10) After setting large circlip (2), install 5th speed synchronizer ring, needle bearing, 5th gear (4), steel ball (5) and washer (6).

NOTE:
Washer should be installed with its oil slot side facing gear.

1.	Sleeve and hub assembly
3.	Bush

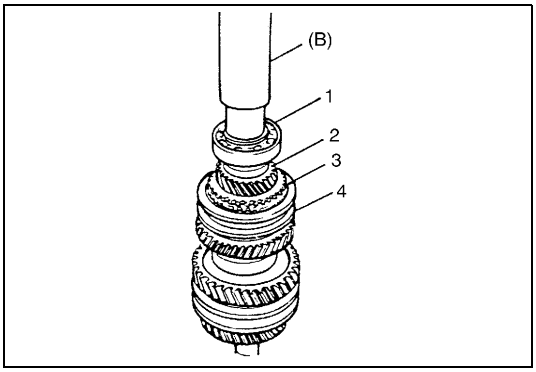

11) Press-fit bearing (1) with special tool and press.

Special tool
(B): 09925-18011

2.	5th gear
3.	Ring
4.	Sleeve and hub assembly

12) Fit small circlip.

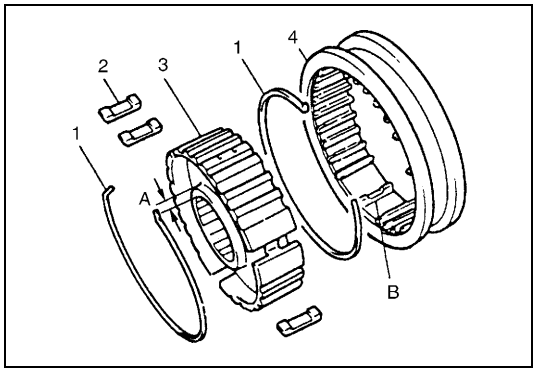

13) Fit sleeve (4) to high speed hub (3), place 3 synchronizer keys (2) and set synchronizer springs (1) as shown in the figure.
Neither sleeve nor key has specific installing direction.

A:	4th side (thin)
B:	Key position

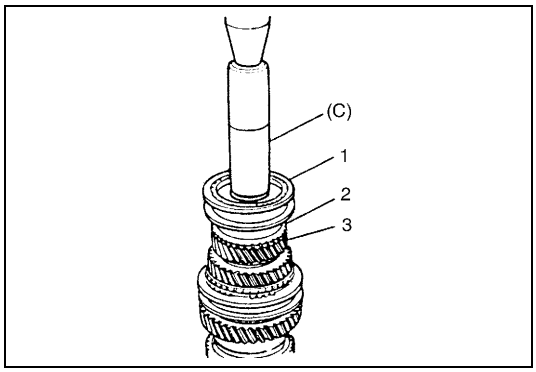

14) Install needle bearing, 3rd gear (3) and 3rd synchronizer ring (2). Then using special tool and press, press-fit high speed sleeve and hub assembly (1) onto shaft.

Special tool
(C): 09913-84510

15) Fit large circlip.
16) Install needle bearing.

Counter shaft

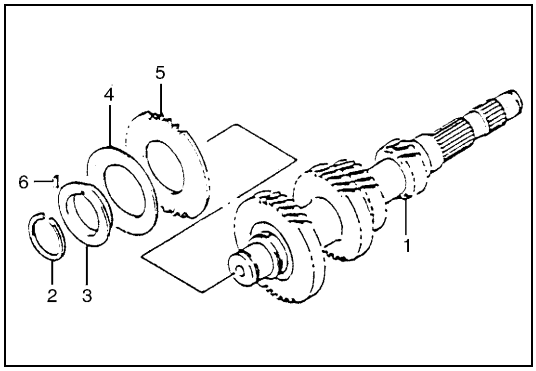

1) Install pin (6), friction gear (5), friction gear spring (4), friction gear retainer (3) and circlip (2) to counter shaft (1) in that order.

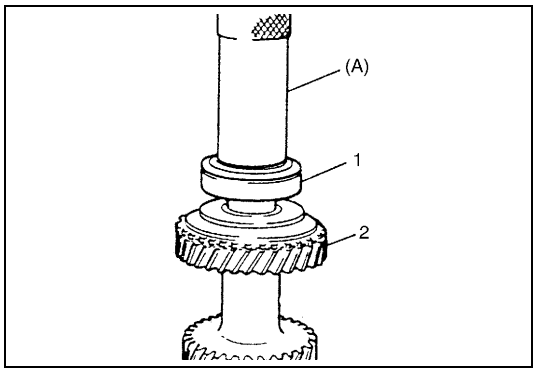

2) Press-fit front bearing (1) and fit circlip.

Special tool
(A): 09913 -84510

2.	Counter shaft

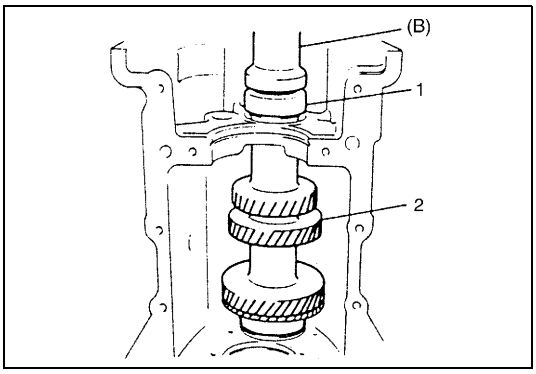

3) With shaft inserted into case, install center bearing outer race (1) on it and then press-fit countershaft (2) by using special tool and hammer. Meanwhile case should be supported on wood blocks.

Special tool
(B): 09951-16080

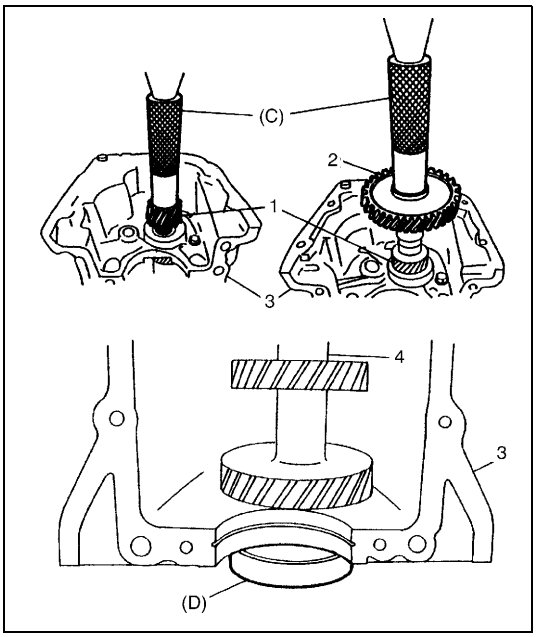

4) Press-fit reverse gear (1) and then 5th gear (2).

NOTE:

When press-fitting, hold counter shaft (4) as shown in the figure with its front end set on special tool.

Special tool
(C): 09913-80113
(D): 09944-66010

3.	Lower case

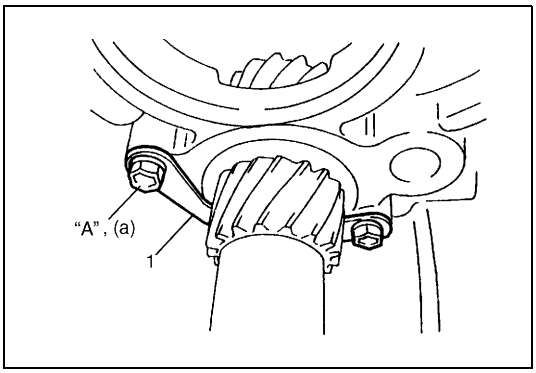

5) Install bearing plate (1) applying thread lock cement "A" to their thread part of bolts.

"A": Cement 99000-32020

Tightening torque
Bearing plate bolt
(a): 6 N·m (0.6 kg-m, 4.0 lb-ft)

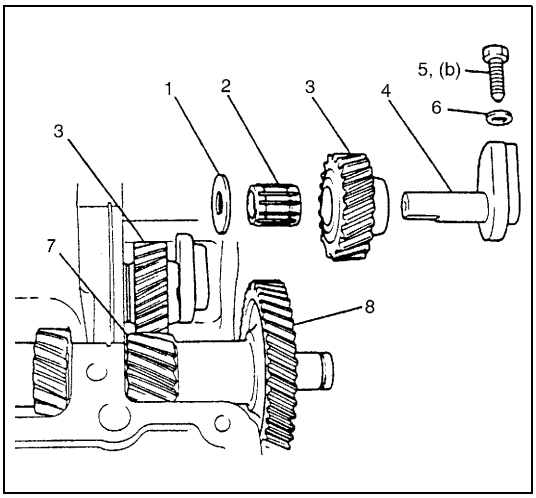

6) Install reverse idle gear (3) together with needle bearing (2) and thrust washer (1) on reverse idle gear shaft (4) and fix them with bolt (5) from outside of case.

NOTE:

Be sure to use aluminum washer for bolt.

Tightening torque
Reverse idle gear shaft bolt
(b): 23 N·m (2.3 kg-m, 17.0 lb-ft)

6.	Washer (aluminum)
7.	Counter shaft reverse gear
8.	Counter shaft 5th gear

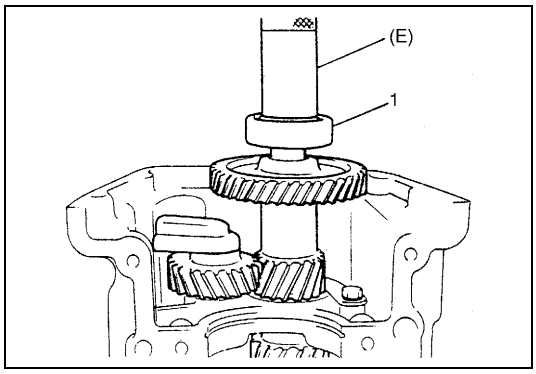

7) After press-fitting rear bearing (1) to counter shaft, make sure to fit circlip securely.

Special tool
(E): 09913-80113

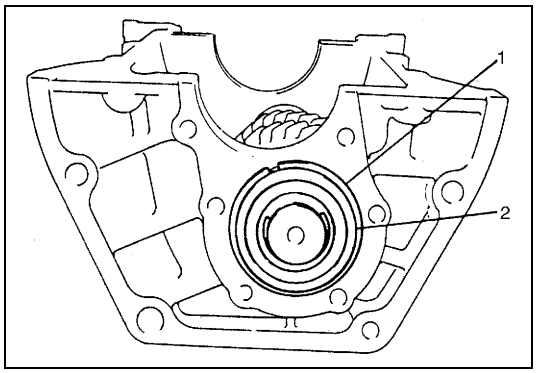

8) Fit circlip (1) around front bearing (2) and check to make sure that circlip just contacts with case surface.

Upper case and shifter

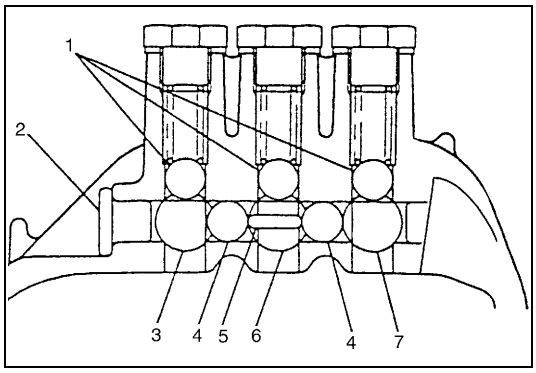

Interlock system is as shown in the figure.

1.	Locating ball
2.	Rubber plug
3.	Reverse gear shift shaft
4.	Interlock ball
5.	Interlock pin
6.	High speed gear shift shaft
7.	Low speed gear shift shaft

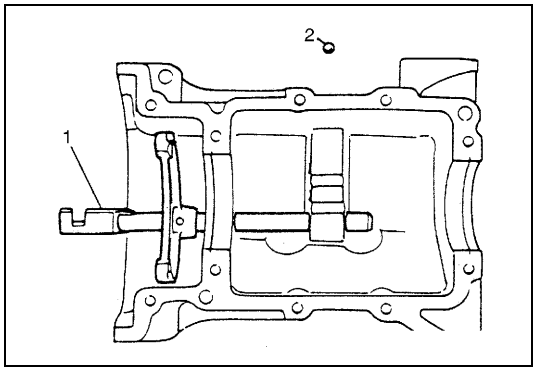

1) With fork installed to reverse gear shift shaft (1), install it into case and put in interlock ball (2).

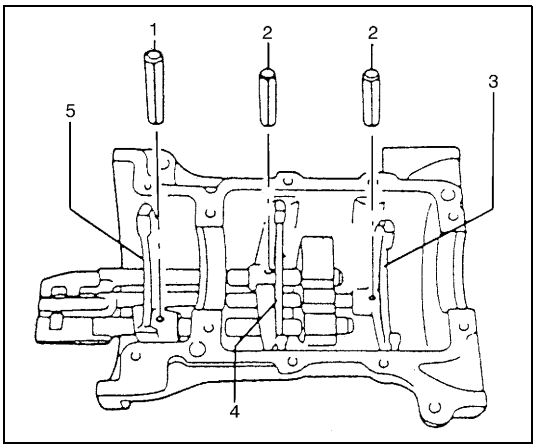

NOTE:

Reverse gear shift fork spring pin is different from other spring pins in length. It is longer than other spring pins.

1.	Reverse gear shift fork spring pin
2.	Low & High gear shift fork spring pin
3.	High speed gear shift fork
4.	Low speed gear shift fork
5.	Reverse gear shift fork

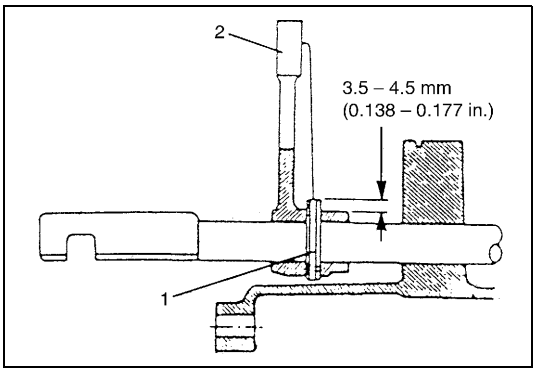

NOTE:

When pressing gear shift fork spring pin (1) into reverse gear shift fork (2), do not allow to go all the way in, but leave its end protruded as much as the length shown in the figure.

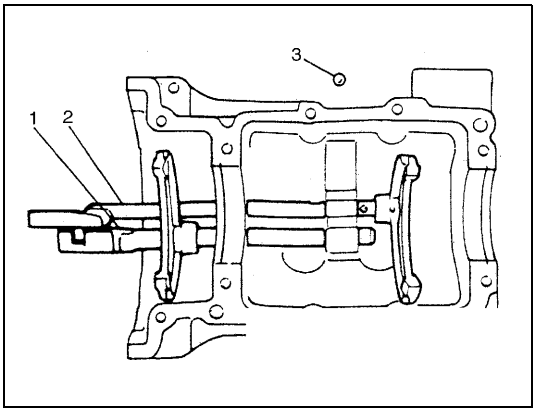

2) With interlock pin fit to high speed gear shift shaft (2), insert it into case and set fork with spring pin and then put in interlock ball (3).

NOTE:

- **Note that high speed gear shift shaft (2) can't be inserted unless reverse gear shift shaft (1) is placed at neutral position.**
- **When inserting high speed gear shift shaft (2), use care not to drop interlock pin.**

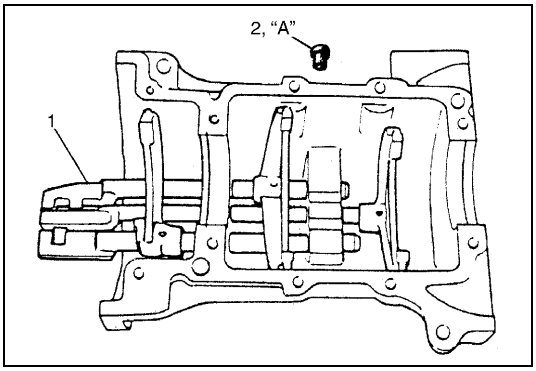

3) With both reverse and high speed gear shift shafts placed at neutral position, insert low speed gear shift shaft (1) into case and fix fork with spring pin. Then apply sealant to rubber plug (2) and fit it in.

"A": Sealant 99000-31110

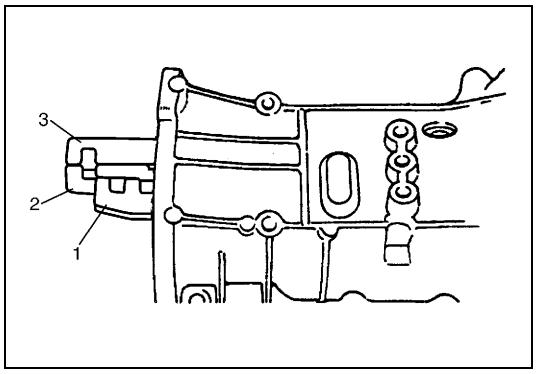

4) Confirm that interlock system operates properly by checking the following.
- When shifted to low position (or 2nd position), shifting of 3rd/4th speed or 5th/Rev speed is not available.

1.	Low speed gear shift shaft (Low position)
2.	High speed gear shift shaft (Neutral)
3.	Reverse gear shift shaft (Neutral)

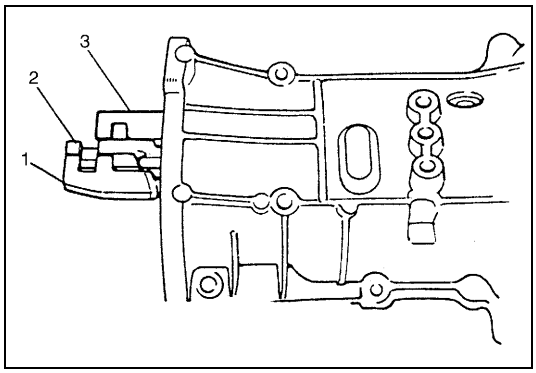

- When shifted to reverse position (or 5th position), shifting of 1st/2nd speed or 3rd/4th speed is not available.

1.	Low speed gear shift shaft (Neutral)
2.	High speed gear shift shaft (Neutral)
3.	Reverse gear shift shaft (Reverse position)

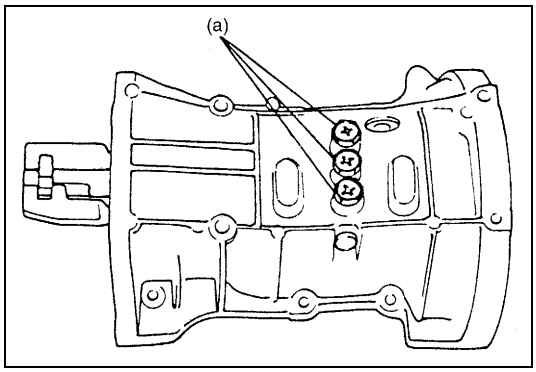

5) Install locating balls and locating springs and then set washers and bolts.

Tightening torque
Locating spring bolt
(a): 28 N·m (2.8 kg-m, 20.0 lb-ft)

Transmission Unit

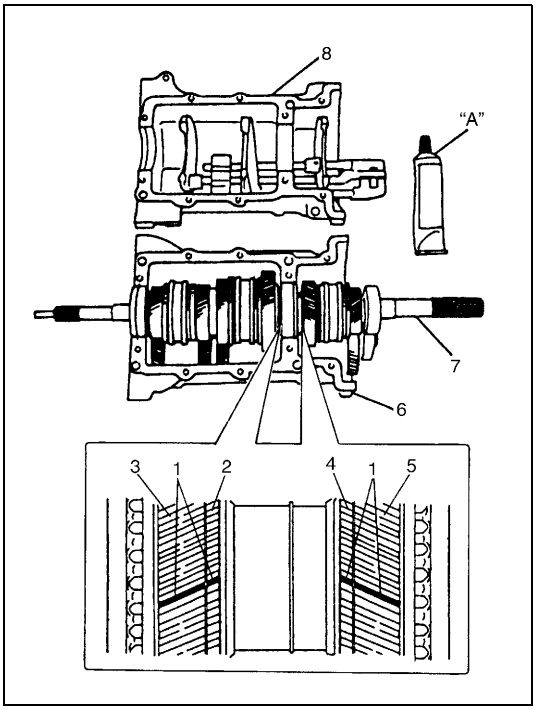

1) Put main shaft-input shaft assembly (7) into lower case (6), apply oil to component parts and check for proper engagement (smooth rotation) with counter shaft.

NOTE:

For vehicle equipped with scissors gears, align paint match marks (1) marked before disassembly as shown in figure when installing main shaft to lower case (6).

2) After cleaning mating surfaces of both cases, coat mating surface of upper case (8) with sealant evenly and put it over lower case (6). At this time, all gears and forks should be set to neutral position.

"A": Sealant 99000-31150

2.	Scissors low gear (if equipped)
3.	Main shaft low gear
4.	Scissors reverse gear (if equipped)
5.	Main shaft reverse gear

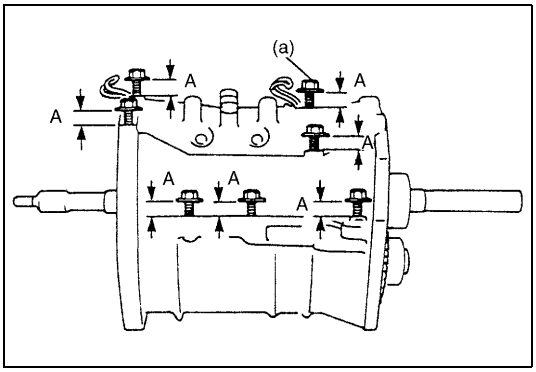

3) Place bolts at their positions and check to make sure that their height from case surface is the same before tightening them. Also, check clamp position and torque them to specification.

Tightening torque
Upper case bolt
(a): 23 N·m (2.3 kg-m, 17.0 lb-ft)

A:	Bolt height before screw in

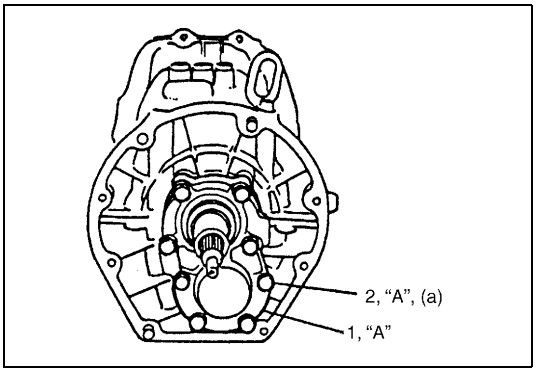

4) Apply sealant "A" to mating surface of input shaft bearing retainer (1) and its bolts (2), then install them.

"A": Sealant 99000-31110

Tightening torque
Input shaft retainer bolt
(a): 23 N·m (2.3 kg-m, 17.0 lb-ft)

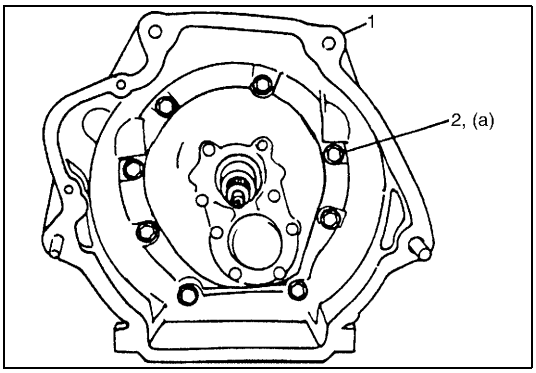

5) Install clutch housing (1) and torque its bolts (2) to specification.

Tightening torque
Clutch housing bolt
(a): 50 N·m (5.0 kg-m, 36.5 lb-ft)

6) Install release bearing

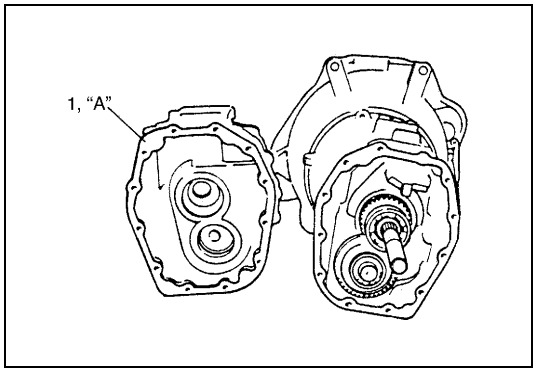

7) Clean mating surfaces of both cases, coat mating surface (1) of rear case with sealant evenly and mate it with transmission itself.

“A”: Sealant 99000-31110

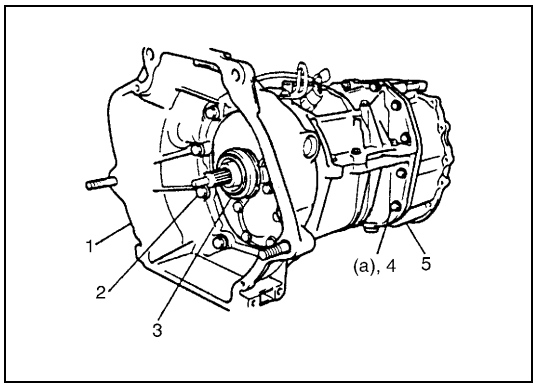

8) Install 12 rear case bolts and torque them to specification.

Tightening torque
Rear case bolt
(a): 23 N·m (2.3 kg-m, 17.0 lb-ft)

1.	Clutch housing
2.	Bolt
3.	Clutch release bearing
4.	Bolt
5.	Rear case

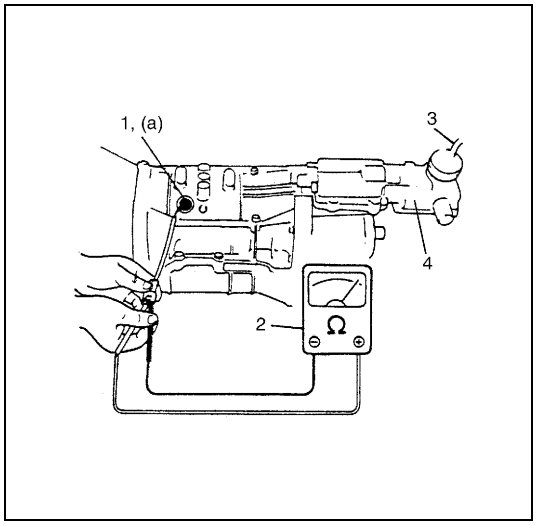

9) Install back up light switch (1).

Tightening torque
Back up light switch
(a): 20 N·m (2.0 kg-m, 14.5 lb-ft)

10) Install gear shift lever case (4) temporarily to confirm switch function by checking the following.
- Back up light switch (1) should conduct when gear shift control lever (3) is at reverse position.

11) After confirming switch function, remove gear shift lever case.

2.	Ohmmeter

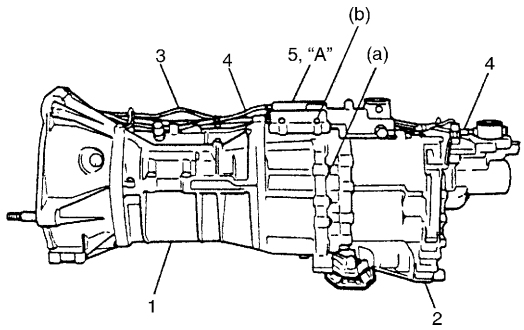

12) Connect transfer assembly (2) to transmission assembly (1) and tighten its fastening bolts to specified torque.

Tightening torque
Transfer to transmission bolt
(a): 23 N·m (2.3 kg-m, 17.0 lb-ft)

13) With sealant applied to mating surface of transmission gear shift lever case (5), put it onto transmission and transfer assembly, and torque bolts to specification.

"A": Sealant 99000-31110

Tightening torque
Gear shift case bolt
(b): 13 N·m (1.3 kg-m, 9.5 lb-ft)

14) Install breather hoses (4) for transmission and transfer and set clamps.
15) Connect wiring harness (3) to each coupler of 4WD switch, 5th switch and back up light switch.
16) Clamp wiring harness (3) and breather hoses (4) securely.

CAUTION:
Fill specified amount of gear oil to transmission and transfer after remounting transmission and transfer assembly to vehicle.

1.	Transmission assembly
2.	Transfer assembly (4WD model) / Extension case (2WD model)

Tightening Torque Specifications

Fastening part	Tightening torque		
	N•m	kg-m	lb-ft
Back up light and 4WD switches	20	2.0	14.5
Control lever locating bolts	17	1.7	12.5
Reverse gear shift limit bolt	23	2.3	17.0
Select return spring bolts	35	3.5	25.5
Shift lever case plate screws	9	0.9	6.5
Gear shift case bolts	13	1.3	9.5
Center bearing plate bolts	6	0.6	4.0
Reverse idle gear shaft bolt	23	2.3	17.0
Locating spring bolts	28	2.8	20.0
Upper case bolts	23	2.3	17.0
Input shaft retainer bolts	23	2.3	17.0
Clutch housing bolts	50	5.0	36.5
Rear case bolts	23	2.3	17.0
Transfer to transmission bolts	23	2.3	17.0

Required Service Material

Material	Recommended SUZUKI product (Part number)	Use
Lithium grease	SUZUKI SUPER GREASE A (99000-25010)	• Oil seal lips • Select return system
Thread lock cement	THREAD LOCK CEMENT SUPER 1333B (99000-32020)	• Shift control lever locating bolts • Reverse gear shift limit bolt • Counter shaft bearing plate bolts
Sealant	SUZUKI BOND No. 1215 (99000-31110)	• Mating surface of gear shift lever case • Rubber plug for interlock ball bore • Upper case mating surface • Mating surface of input shaft bearing retainer • Input shaft retainer bolts • Rear case mating surface

Special Tool

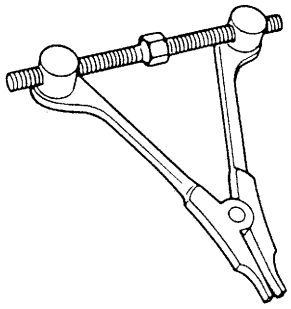 09912-34510 Case separator	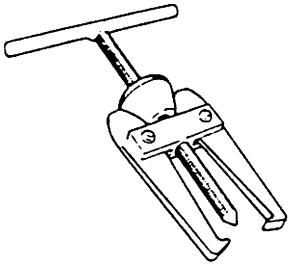 09913-60910 Bearing/Gear puller	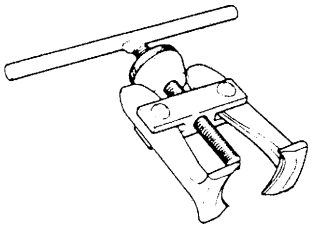 09913-61510 Bearing puller	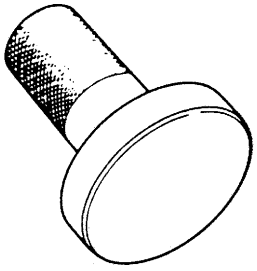 09913-75510 (O.D. 70.5 mm) Bearing installer
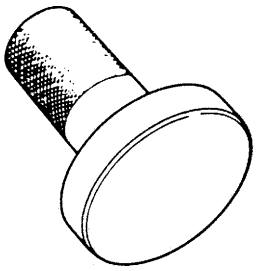 09913-75520 (O D. 60.5 mm) Bearing installer	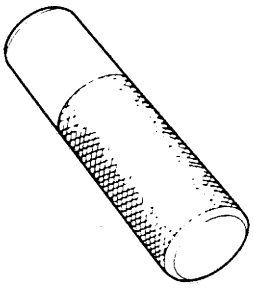 09913-80113 Bearing installer	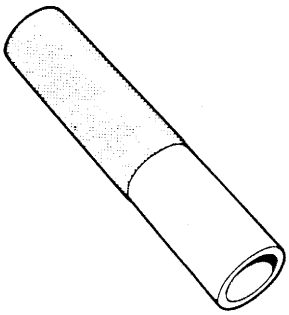 09913-84510 Bearing installer	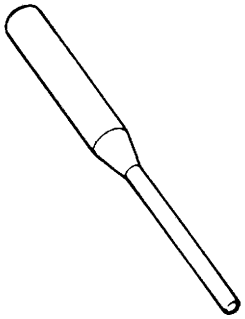 09922-85811 Spring pin remover
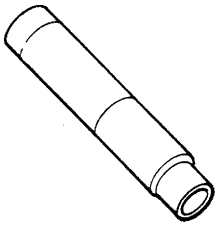 09925-18011 Bearing installer	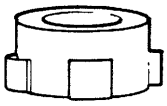 09927-08210 Shaft remover	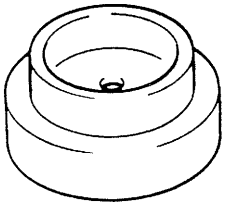 09944-66010 Wheel hub/knuckle oil seal installer	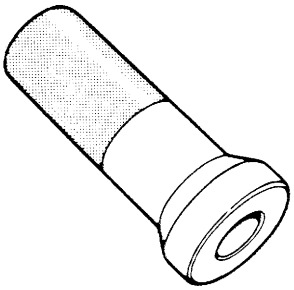 09951-16080 Bearing installer

SECTION 7A1

MANUAL TRANSMISSION (TYPE 2)

CONTENTS

General Description

Identification of Transmission Type

Refer to “Identification of Transmission Type” in Section 7A.

Components

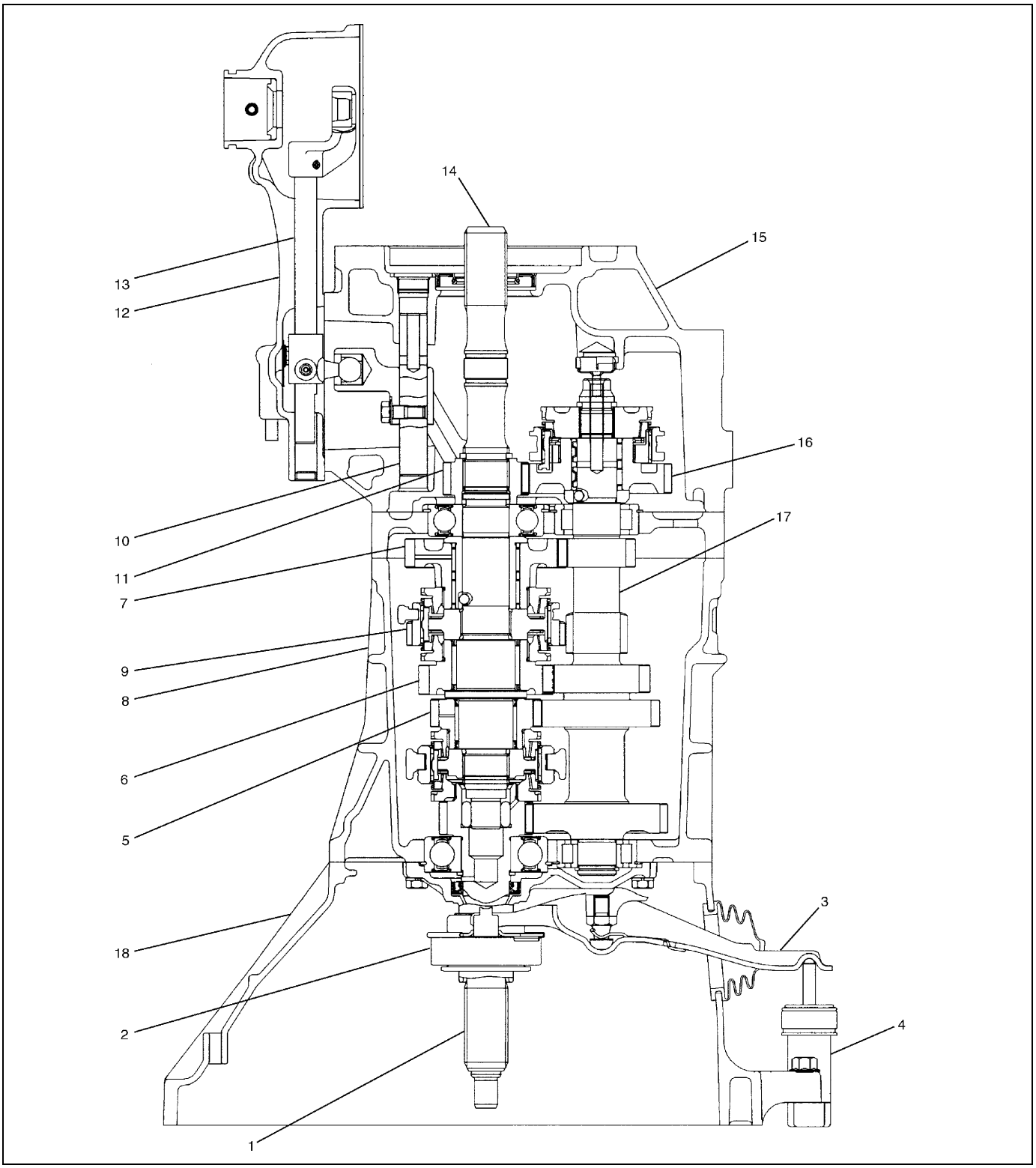

1. Input shaft	6. Main shaft 2nd gear	11. Main shaft 5th gear	16. Counter shaft 5th gear
2. Clutch release bearing	7. Main shaft low gear	12. Gear shift lever case	17. Counter shaft
3. Clutch release fork	8. Front case	13. Gear shift shaft	18. Clutch housing
4. Clutch operating cylinder	9. Main shaft reverse gear	14. Main shaft	
5. Main shaft 3rd gear	10. Gear shift inner shaft	15. Rear case	

Input and Counter Shaft Components

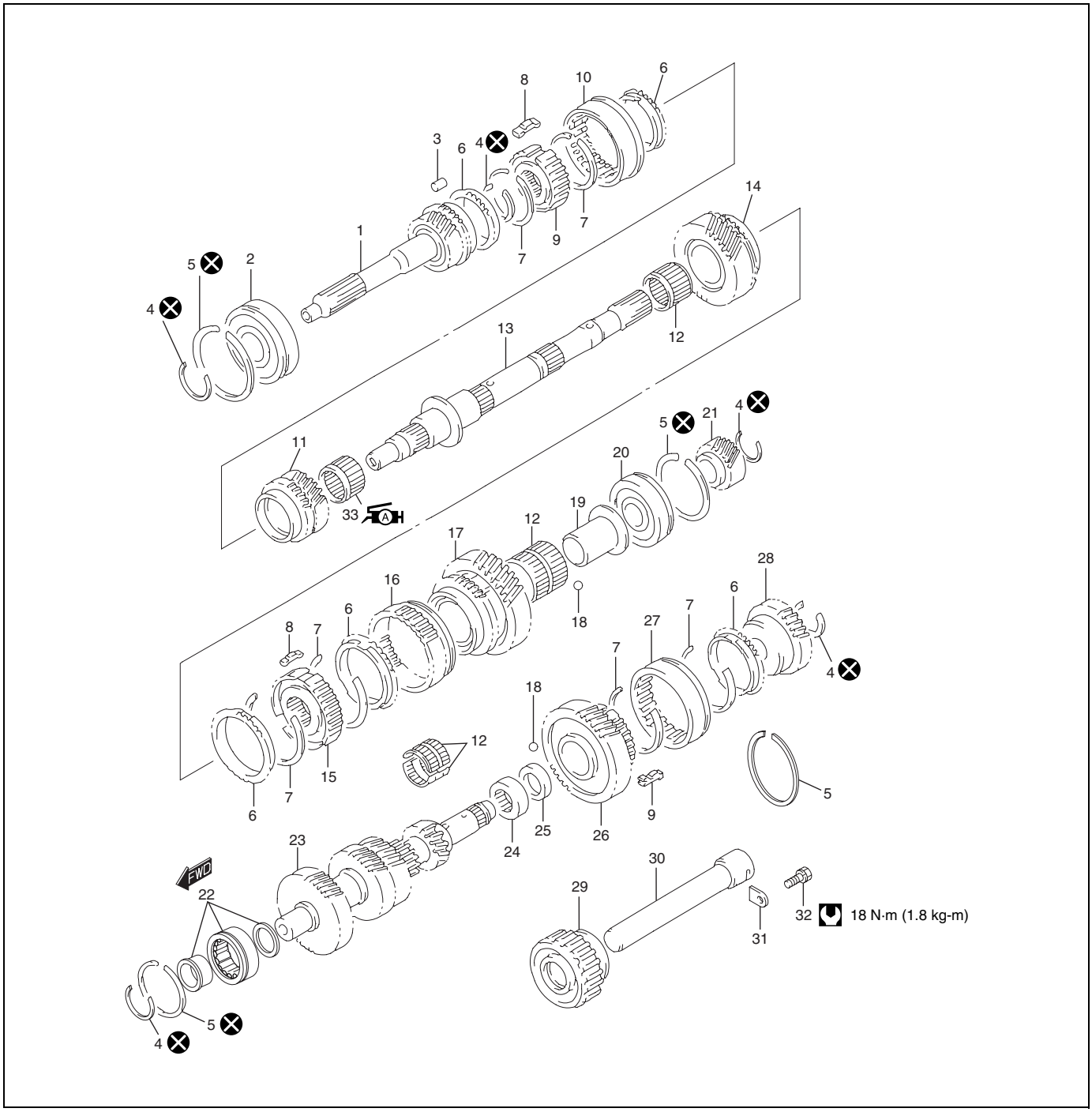

1. Input shaft	13. Main shaft	25. Thrust washer
2. Input shaft bearing	14. 2nd gear	26. Counter shaft 5th gear (and hub)
3. Input shaft roller	15. Low speed hub	27. 5th sleeve
4. Circlip	16. Low speed sleeve	28. 5th speed synchronizer dog
5. C-ring	17. Low gear	29. Reverse idle gear
6. Synchronizer ring	18. Ball	30. Reverse gear shaft
7. Synchronizer spring	19. Needle bush	31. Reverse gear shift plate
8. Synchronizer key	20. Main shaft bearing	32. Reverse gear shaft bolt
9. High speed hub	21. 5th gear	33. Input shaft bearing roller :Apply grease 99000-25010 to all around part of roller.
10. High speed sleeve	22. Counter shaft front bearing	Tighting torque
11. 3rd gear	23. Counter shaft	Do not reuse
12. Needle bearing	24. Counter shaft rear bearing	

Transmission Case Components

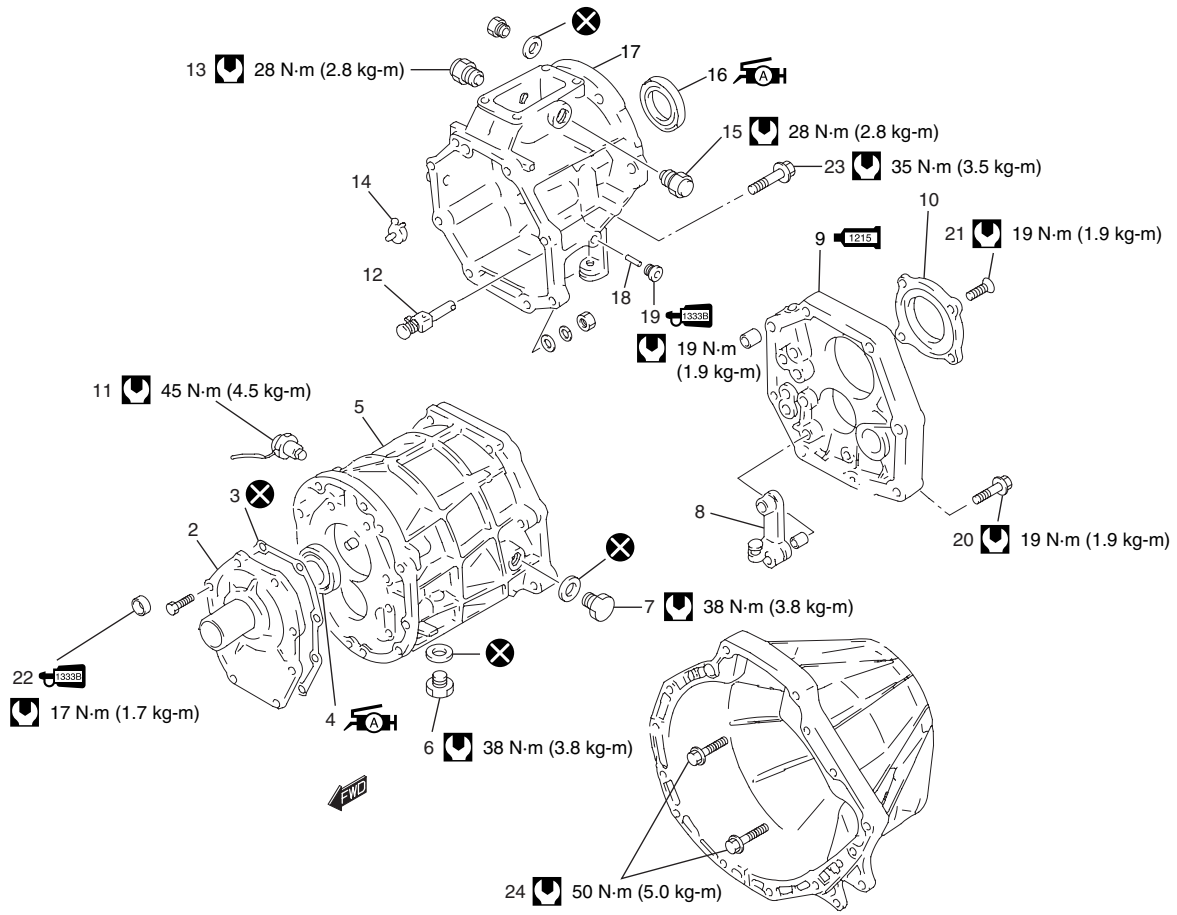

1. Clutch housing	10. Main/Counter shaft bearing plate	19. Interlock cam plug : Apply thread lock 99000-32020 to all around thread part of plug.
2. Input shaft bearing retainer	11. Back up light switch	20. Reverse link stay bolt
3. Gasket	12. 5th reverse interlock cam comp	21. Bearing plate bolt
4. Oil seal : Apply grease 99000-25010 to oil seal lip	13. Return spring low bolt	22. Input shaft bearing retainer bolt : Apply thread lock 99000-32020 to all around thread part of bolt.
5. Transmission front case	14. Counter shaft gutter	23. Transmission case bolt
6. Oil drain plug	15. Return spring reverse bolt	24. Clutch housing bolt
7. Oil filter/level plug	16. Main shaft oil seal : Apply grease 99000-25010 to oil seal lip.	Tighting torque
8. Reverse link stay	17. Transmission rear case	Do not reuse
9. Transmission intermediate case : Apply sealant 99000-31110 to mating surface to transmission case.	18. Interlock cam pin	

Gear Shifter Components

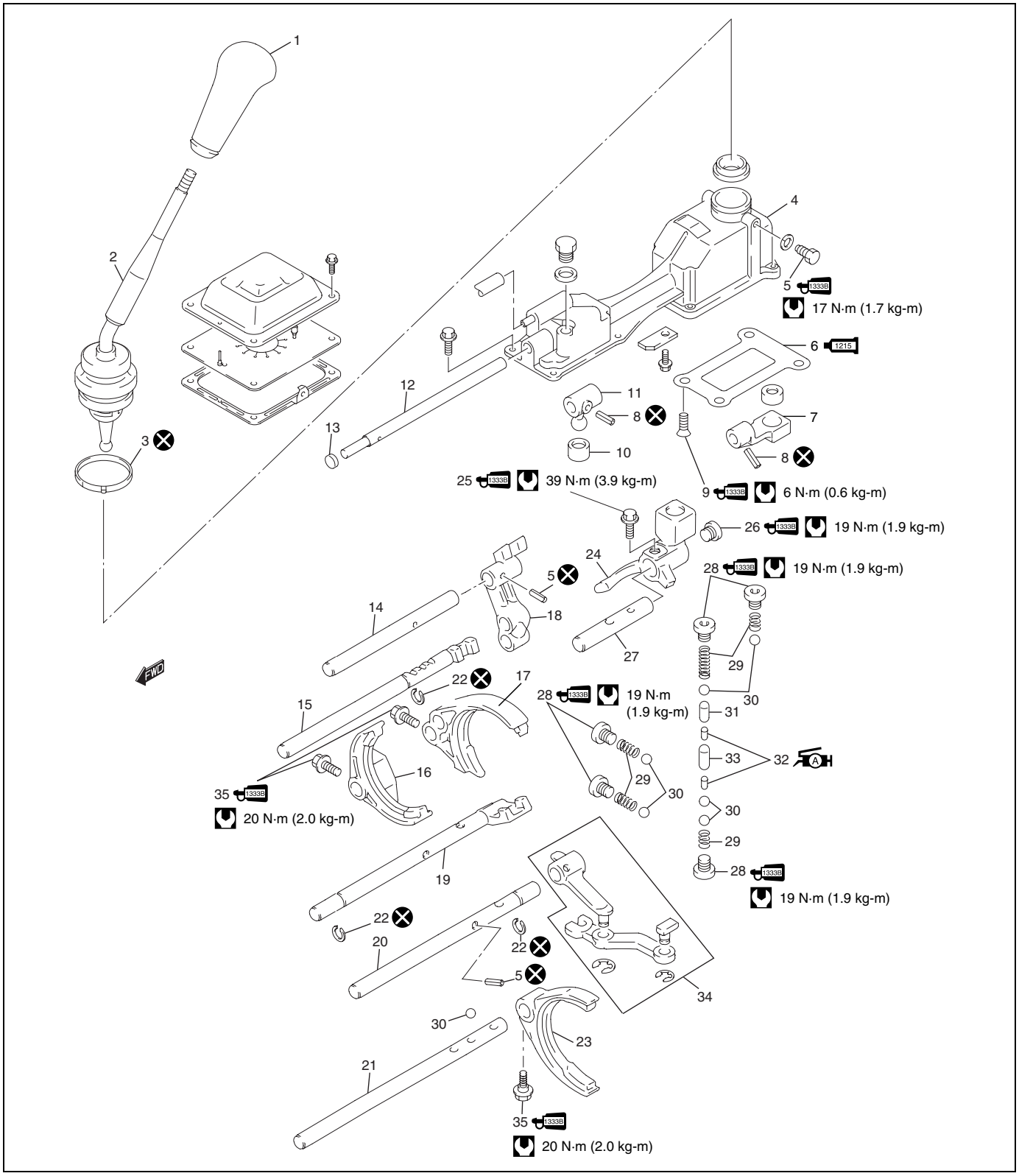

1. Gear shift control lever knob	14. 5th reverse gear shift shaft	27. Gear shift inner shaft
2. Gear shift control lever	15. High gear shift shaft	1333B 28. Locating screw : Apply thread lock 99000-32020 to all around thread part of screw.
3. Clamp	16. High speed gear shift fork	29. Locating spring
4. Gear shift lever case	17. Low speed gear shift fork	30. Locating ball
1333B 5. Control lever locating bolt : Apply thread lock 99000-32020 to all around thread part of bolt.	18. Reverse gear shift yoke	31. Locating roller No.3

1215 6. Case plate : Apply sealant 99000-31110 to mating surface to lever case.	19. Low gear shift shaft	A H 32. Locating roller No.2 : Apply grease 99000-25010 to all around part of roller.
7. Gear shift arm	20. Reverse gear shift shaft	33. Locating roller No.1
8. Spring pin	21. 5th gear shift shaft	34. Reverse gear shift link comp
1333B 9. Gear shift lever case plate screw : Apply thread lock 99000-32020 to all around thread part of screw.	22. Circlip	1333B 35. Shift fork bolt : Apply thread lock 99000-32020 to all around thread part of bolt.
10. Bush	23. 5th gear shift fork	Tighting torque
11. Gear shift lever	24. Gear shift shaft inner lever	Do not reuse
12. Gear shift shaft	1333B 25. Gear shift shaft inner bolt : Apply thread lock 99000-32020 to all around thread part of bolt	
13. Case plug	1333B 26. Gear shift shaft inner plug : Apply thread lock 99000-32020 to all around thread part of plug.	

Unit Disassembly

Gear Shift Lever Case

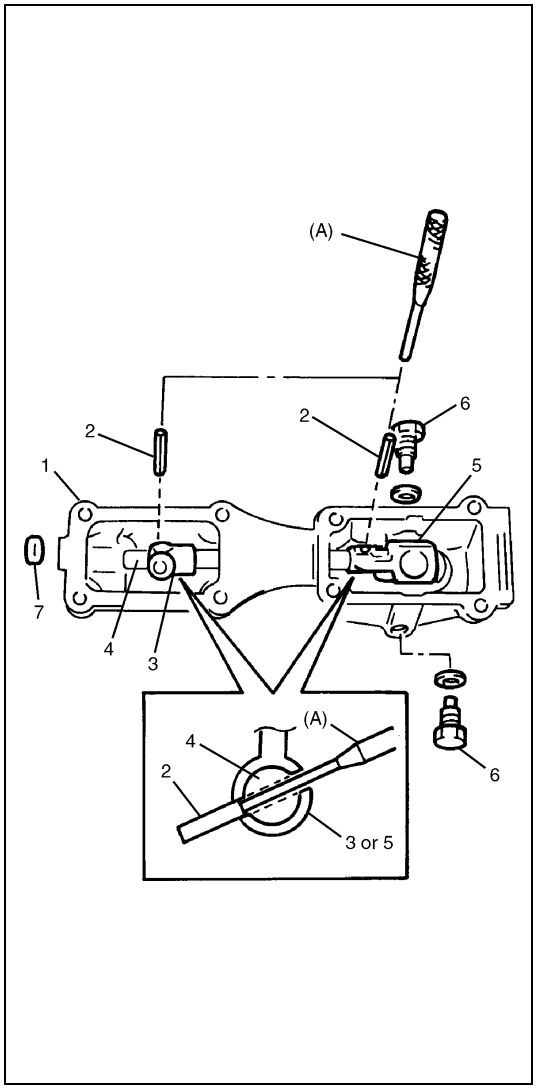

1) Remove case plate.
2) With case supported with soft jawed vise, remove lever locating bolts (6).

NOTE:

Use aluminum plates between vise and case to protect case against damage.

3) Using special tool, drive spring pin (2) into gear shift arm (5) as far as the position shown in the figure.

CAUTION:

When driving spring pin (2), use care not to damage gear shift lever case (1).

Special tool
(A): 09922-85811

4) Likewise, drive spring pin (2) into gear shift lever (3) as far as the position shown in the figure.

CAUTION:

When driving spring pin (2), use care not to damage gear shift lever case (1).

Special tool
(A): 09922-85811

5) Remove case plug (7).
6) Pull out gear shift shaft (4) from gear shift lever case (1) and take out gear shift lever (3).

Transmission Unit

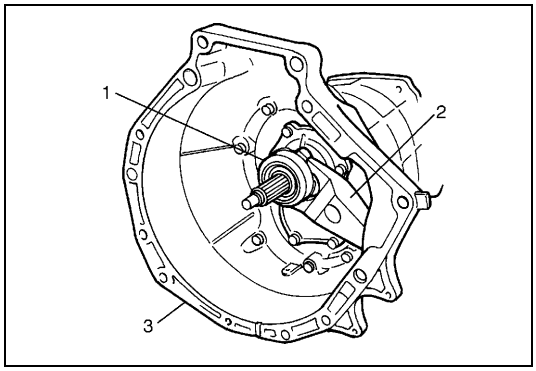

1) Remove clutch release bearing (1), release fork (2) and clutch housing (3).

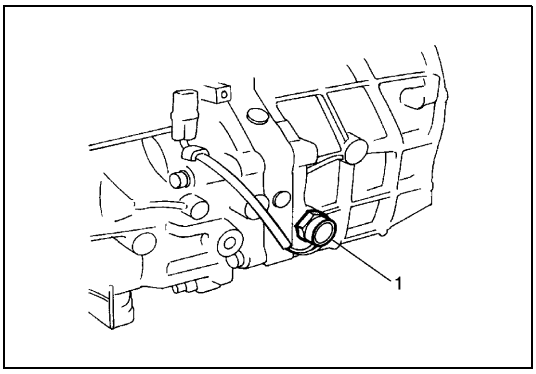

2) Remove back-up light switch (1).

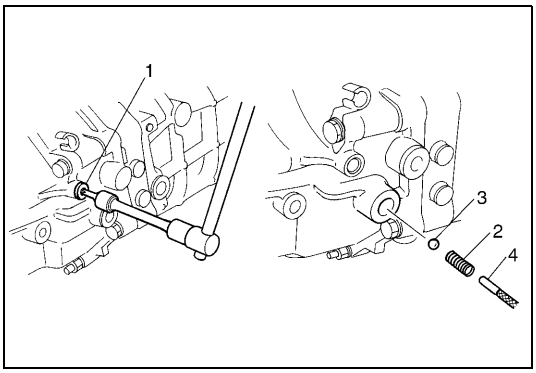

3) Remove locating screw (1), locating spring (2) and locating ball (3) as shown in the figure.

4. Magnet

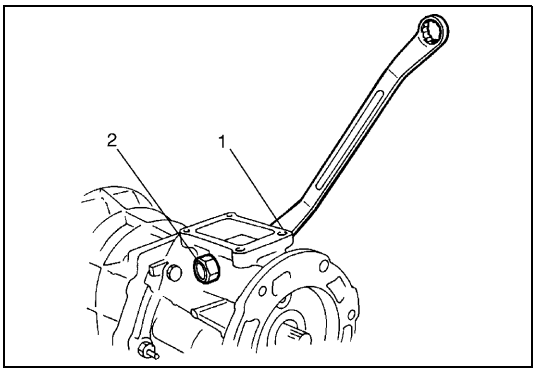

4) Remove return spring low bolt (1) and return spring reverse bolt (2).

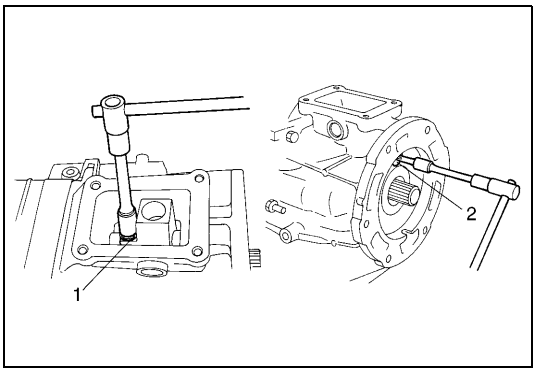

5) Remove gear shift shaft inner bolt (1)/plug (2).

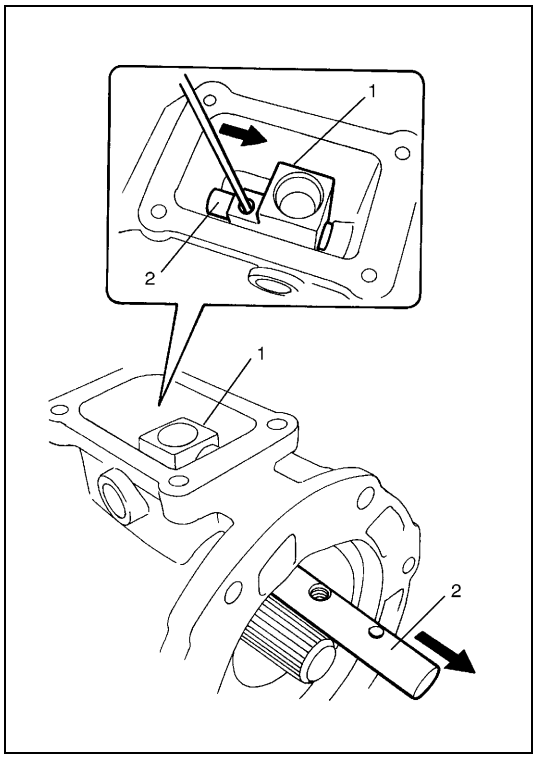

6) Using bolt hole, pull gear shift inner shaft (2) and then remove gear shift shaft inner lever (1).

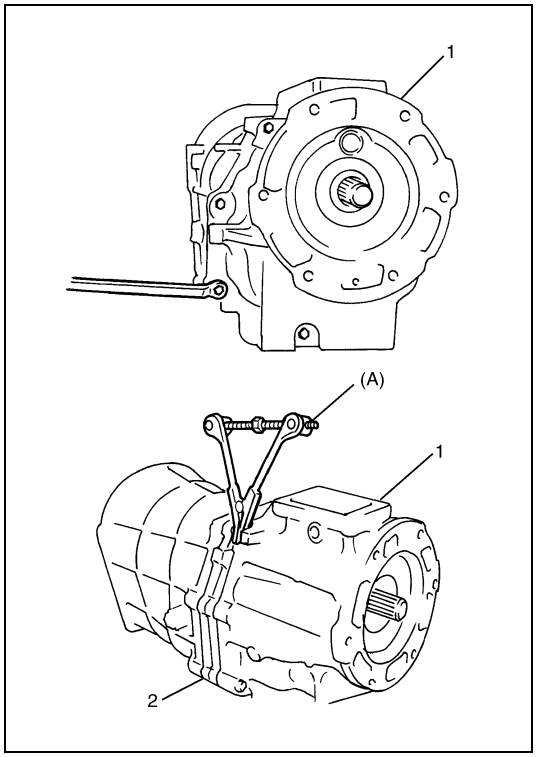

7) After removing transmission case bolts/nut, remove transmission rear case (1) from intermediate case (2).

Special tool
(A): 09912-34510

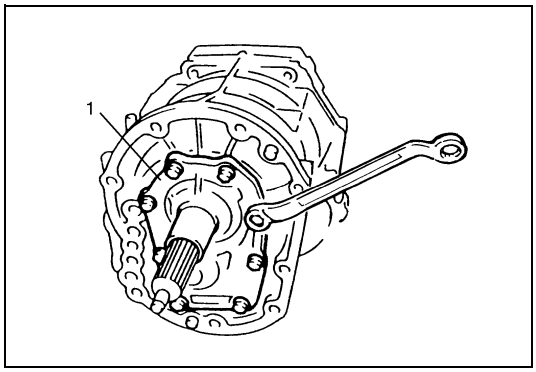

8) Remove input shaft bearing retainer (1) and gasket.

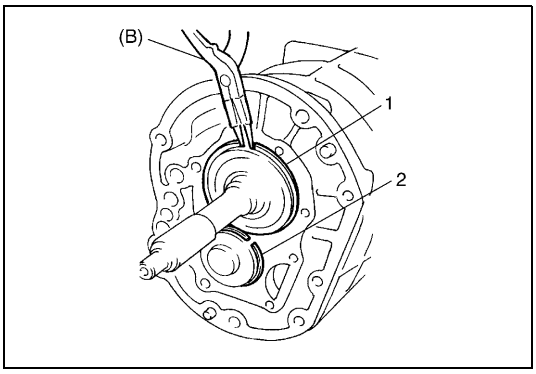

9) Remove C-ring (1) of input shaft bearing and C-ring (2) of counter shaft front bearing.

Special tool
(B): 09900-06107

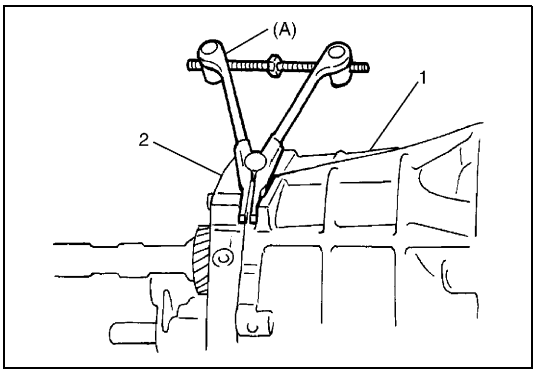

10) Using special tool, separate transmission front case (1) and transmission intermediate case (2).

Special tool
(A): 09912-34510

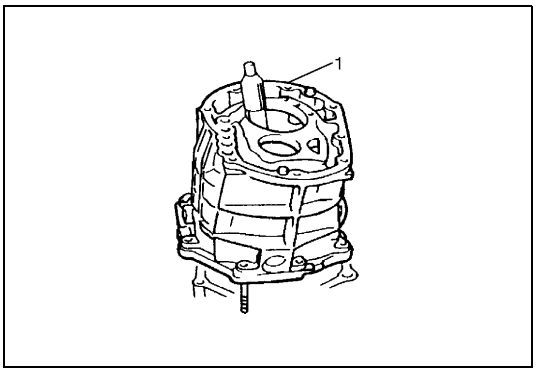

11) Set transmission on workbench and remove transmission front case (1).

NOTE:

To remove transmission front case, tilt it as shown in the figure.

12) Set transmission intermediate case on vise securely.

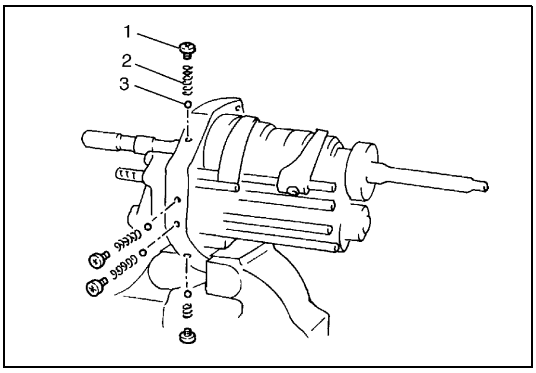

13) Remove locating screws (1), locating springs (2) and locating ball (3) as shown in the figure.

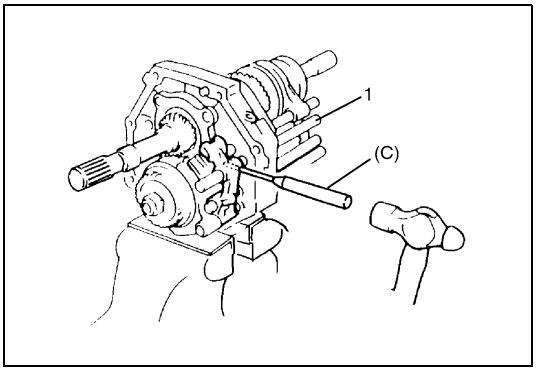

14) Using special tool, remove spring pin and then remove 5th-reverse gear shift shaft (1).

Special tool
(C): 09922-85811

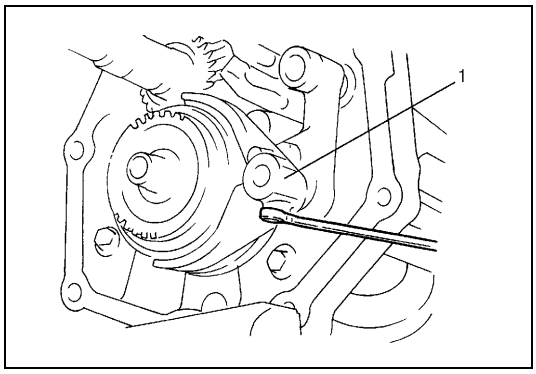

15) Remove bolt from 5th gear shift fork (1).

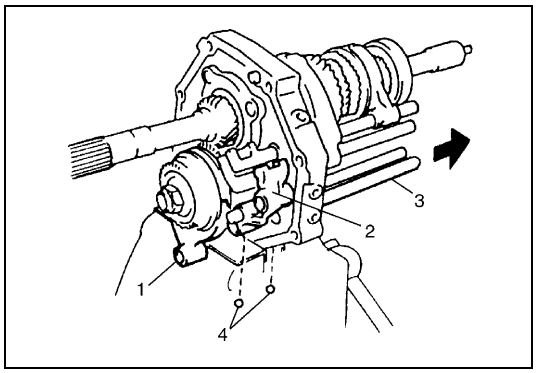

16) Remove 5th gear shift fork (1), 5th gear shift shaft (3) and reverse gear shift yoke (2).

NOTE:

When pulling 5th gear shift shaft (3), place hand so as to catch balls (4) dropping from reverse gear shift yoke (2) and intermediate plate.

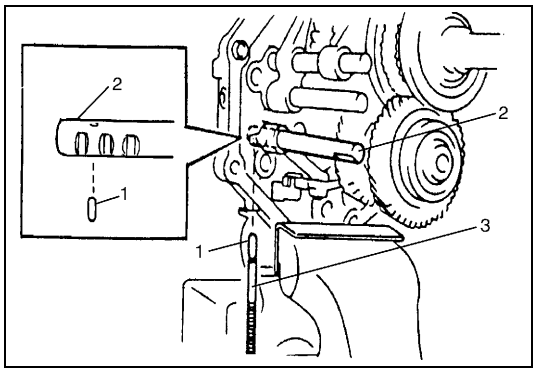

17) Remove locating roller No.2 (1) from reverse gear shift shaft (2) by using magnet (3).

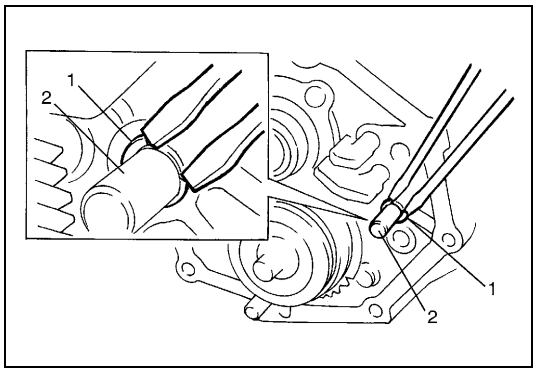

18) Remove circlip (1) from reverse gear shift shaft (2) as shown in the figure.

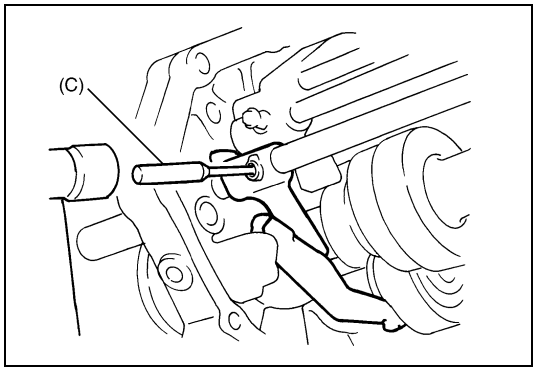

19) Remove spring pin from reverse gear shift link component.

Special tool
(C): 09922-85811

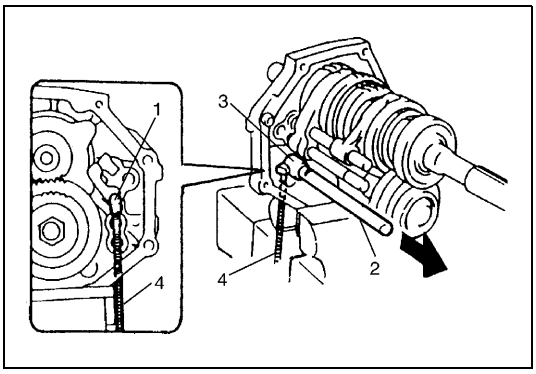

20) Remove reverse gear shift shaft (2), locating roller No. 1 (1), and reverse gear shift link component (3) by using magnet.

NOTE:

When pulling gear shaft (2), hold locating roller No. 1 (1) with magnet (4) to prevent it from falling.

21) Disassemble reverse gear shift link component (3) by removing E-rings.

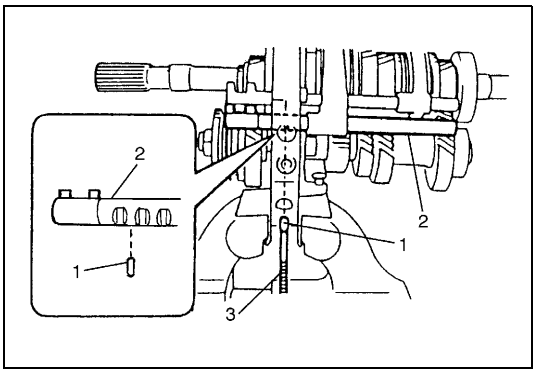

22) Remove locating roller No.2 (1) from low gear shift shaft (2) by using magnet (3).

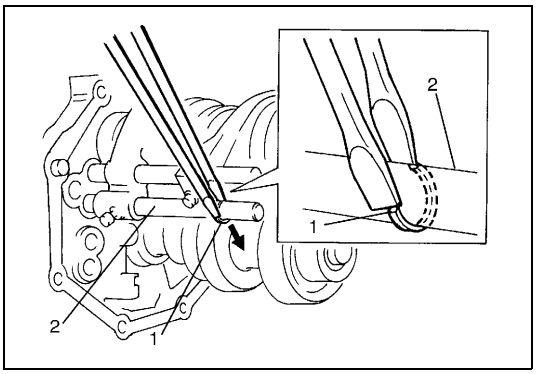

23) Remove circlip (1) from low gear shift shaft (2) as shown in the figure.

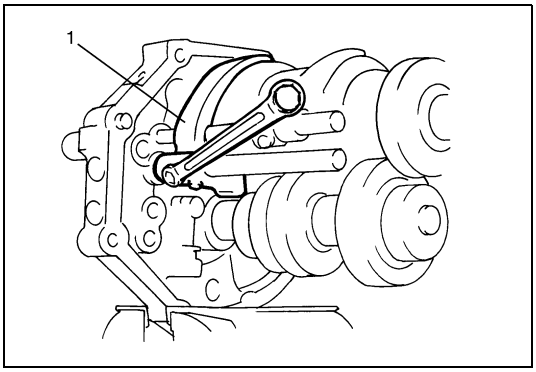

24) Remove bolt from low speed gear shift fork (1).

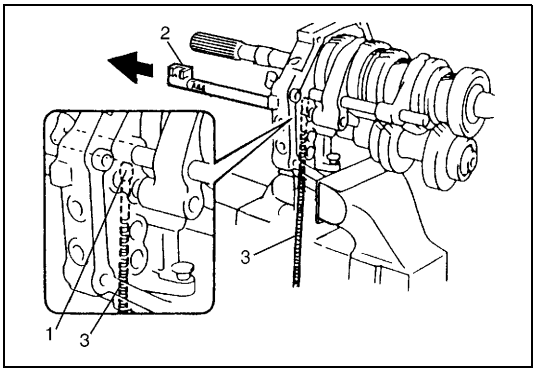

25) Remove low gear shift shaft (2) and locating roller No.1 (1) by using magnet (3).

NOTE:

When pulling gear shaft (2), hold locating roller No.1 (1) with magnet (3) to prevent it from falling.

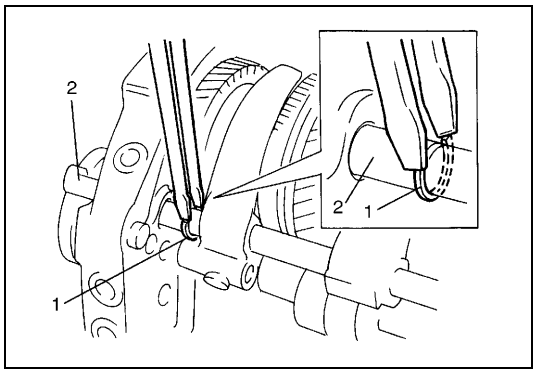

26) Remove circlip (1) from high gear shift shaft (2) as shown in the figure.

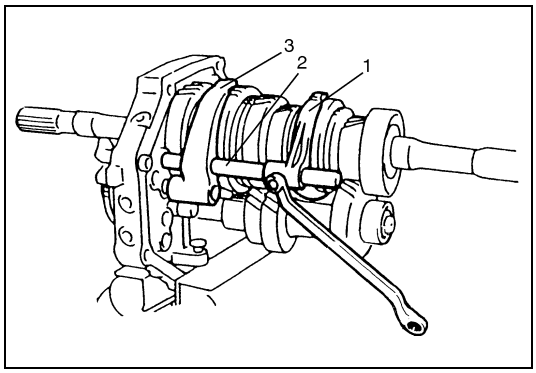

27) Remove bolt from high speed gear shift fork (1).
28) Remove high gear shift shaft (2), high speed gear shift fork (1) and low speed gear shift fork (3).

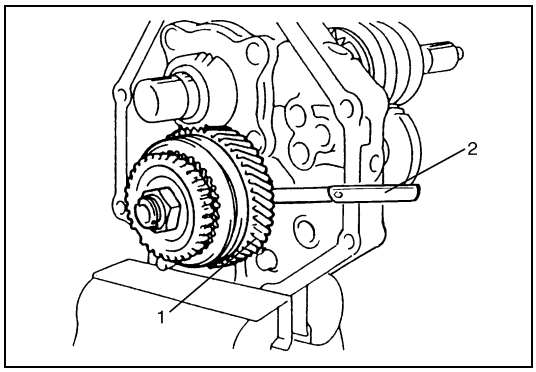

29) Check counter shaft 5th gear (1) thrust clearance by using thickness gauge (2).

Counter shaft 5th gear thrust clearance:
Standard: 0.10 – 0.30 mm (0.0040 – 0.0118 in.)

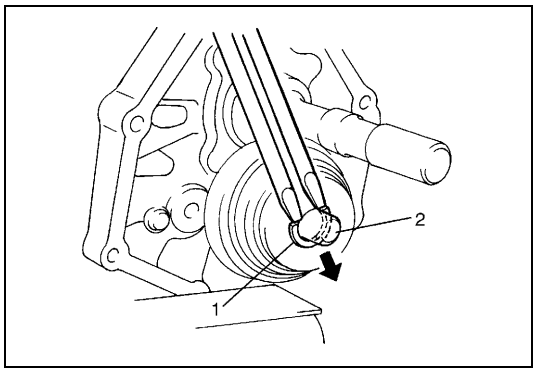

30) Remove circlip (1) from counter shaft (2) as shown in the figure.

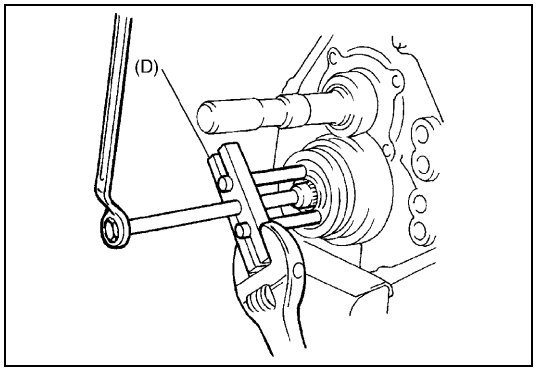

31) Remove 5th speed synchronizer dog by using special tool.

Special tool
(D): 09941-84510

32) Remove synchronizer ring, needle bearing and counter shaft 5th gear.

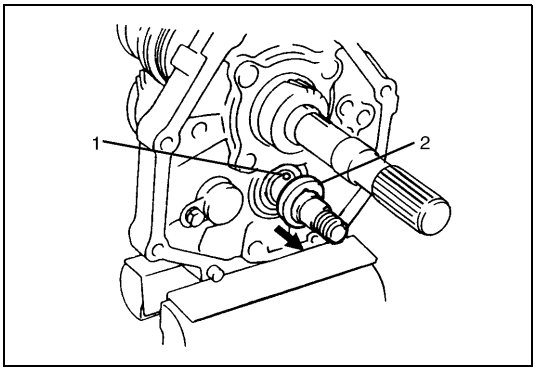

33) Remove thrust washer (2) and ball (1).

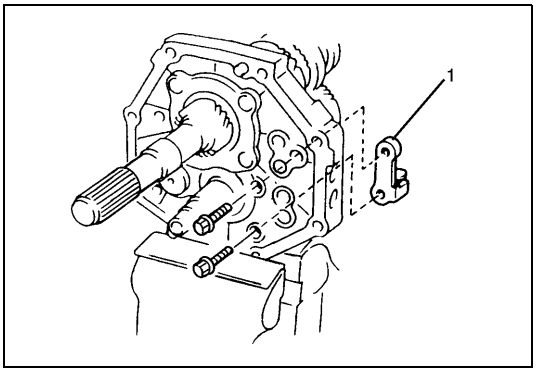

34) Remove reverse link stay (1) from intermediate case.

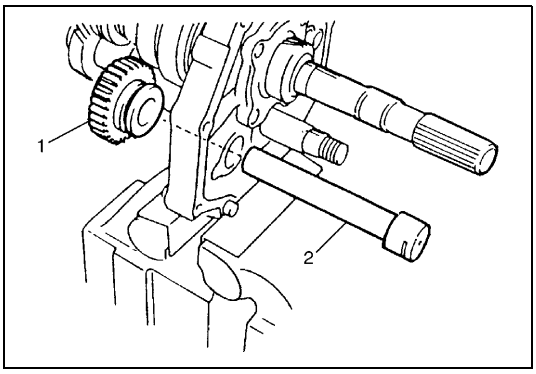

35) Remove reverse idle gear (1) and shaft (2).

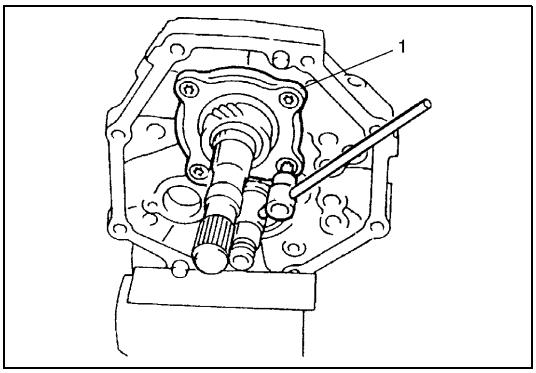

36) Remove main and counter shaft bearing plate (1).

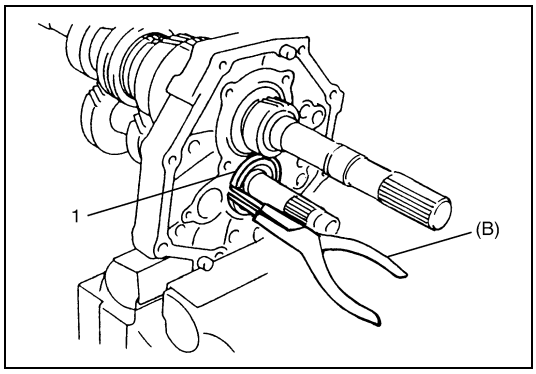

37) Remove C-ring (1) of counter shaft rear bearing.

Special tool
(B): 09900-06107

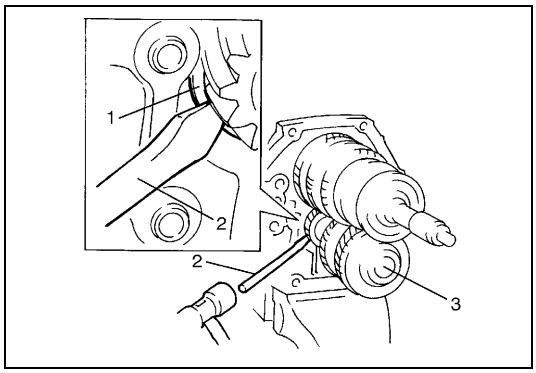

38) Using rod (2) and hammer, remove counter shaft rear bearing (1) and counter shaft (3).

NOTE:

This removal requires 2 persons. One should hold counter shaft (3) and the other should remove bearing (1) by using rod (2) and hammer.

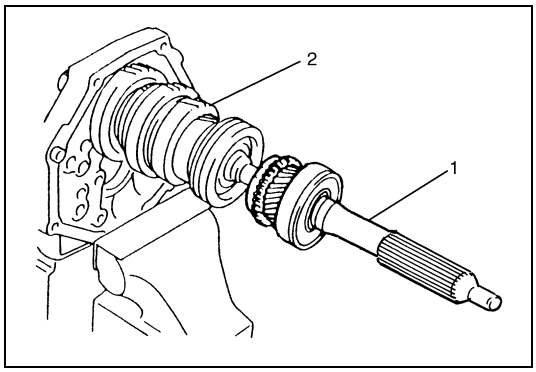

39) Remove input shaft assembly (1) with synchronizer ring from main shaft assembly (2).

NOTE:

When removing input shaft, be careful not to drop bearing roller.

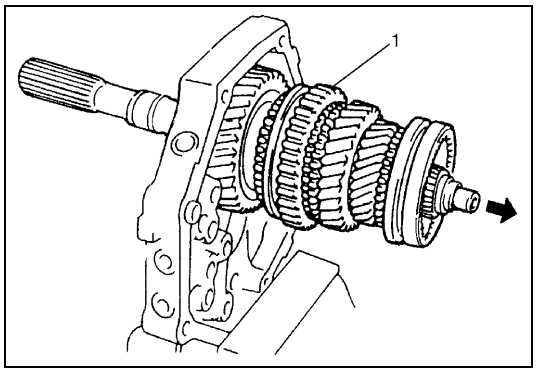

40) Remove C-ring of main shaft and pull out main shaft assembly (1).

NOTE:

If intermediate case is engaged with bearing firmly, tap front face of intermediate case with plastic hammer lightly as it will cause main shaft assembly to come off forward.

Sub-Assembly

Input shaft assembly

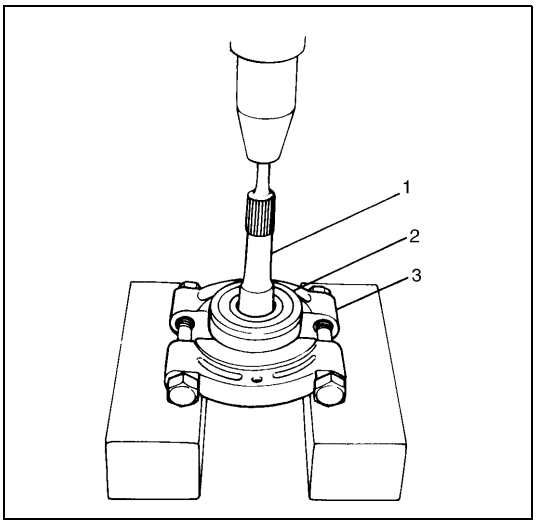

Remove circlip of input shaft (1) and pull out bearing (2) with puller (3) and press.

CAUTION:
Sealed bearing must not be washed. Replace it with new one when required.

Main shaft assembly

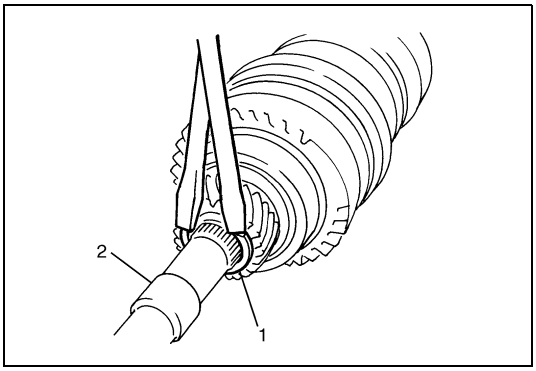

1) Remove circlip (1) from main shaft (2) as shown in the figure.

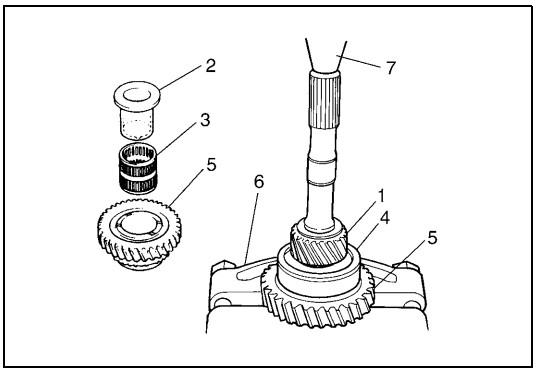

2) Pull out 5th gear (1), needle bush (2), needle bearing (3), main shaft bearing (4) and low gear (5) with puller (6) and press (7).

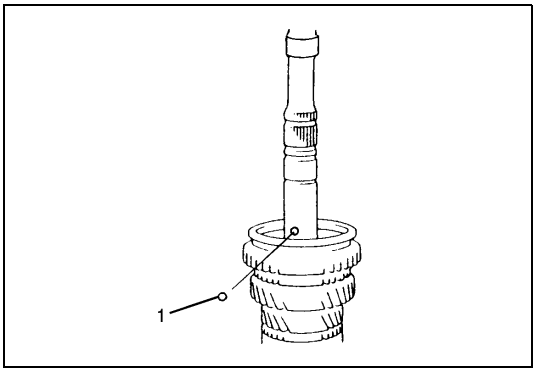

3) Remove synchronizer ring and ball (1).

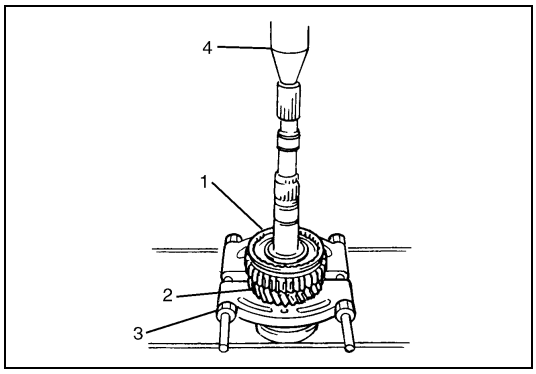

4) Pull out low speed sleeve/hub assembly (1), needle bearing and 2nd gear (2) from main shaft.
5) Pull off synchronizer springs/keys and low speed sleeve from hub.

3.	Puller
4.	Press

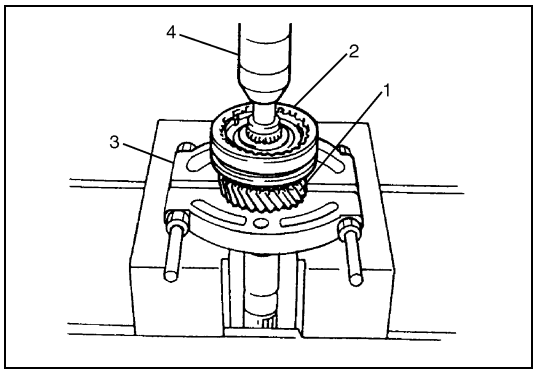

6) Remove circlip from front part of main shaft and pull out 3rd gear (1), needle bearing, synchronizer ring and high speed sleeve/hub assembly (2).

3.	Puller
4.	Press

Counter shaft & reverse idle gear

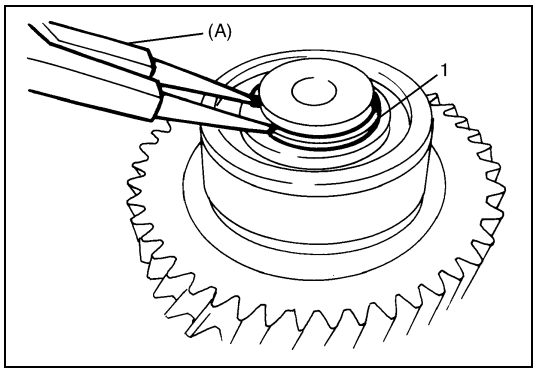

1) Remove circlip (1) from counter shaft.

Special tool
(A): 09900-06107

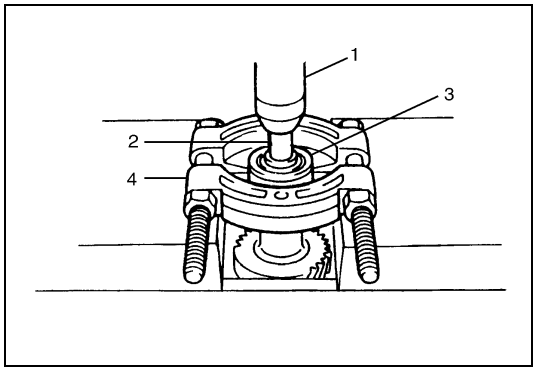

2) Pull out bearing (3) from counter shaft by using puller (4), press (1) and rod (diameter approx. 22 mm (0.87 in.)) (2).

Input shaft bearing retainer and oil seal

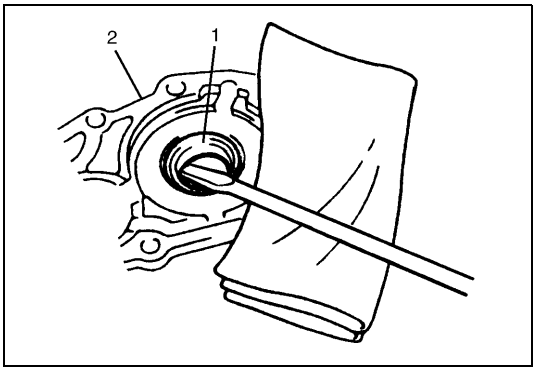

Remove oil seal (1) from bearing retainer (2) by using rod or the like as shown in the figure.

NOTE:
Unless oil seal is leaky or its lip is excessively hardened, replacement is not necessary.

Transmission rear case

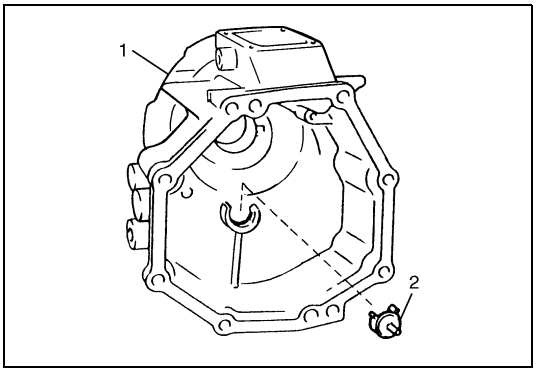

1) Remove counter shaft gutter (2) from transmission rear case (1).

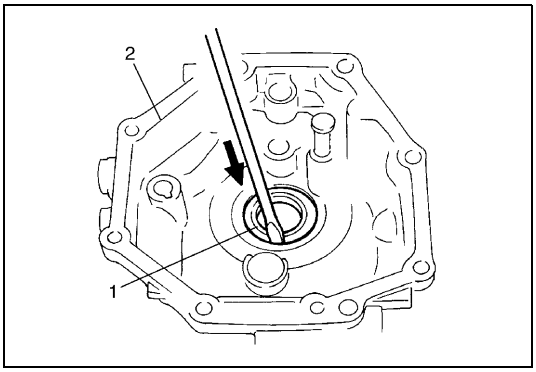

2) Take out oil seal (1) from rear case (2).

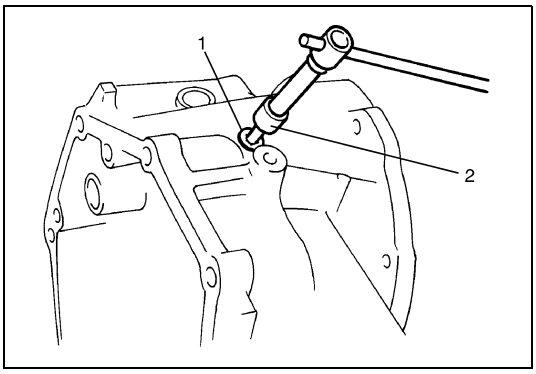

3) Remove interlock cam plug (1) by using torx® (2).

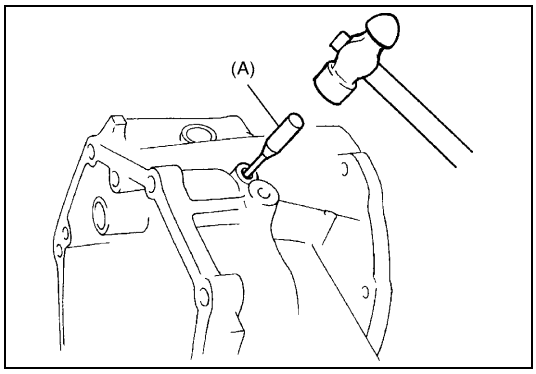

4) Remove pin by using special tool and a hammer.

Special tool
(A): 09922-85811

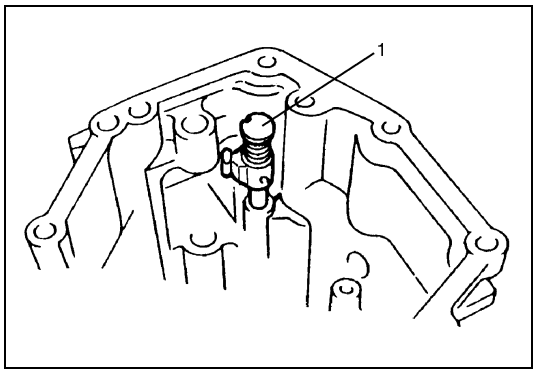

5) Pull out interlock cam component (1).

Components Inspection

Sub-Assembly

Input shaft assembly

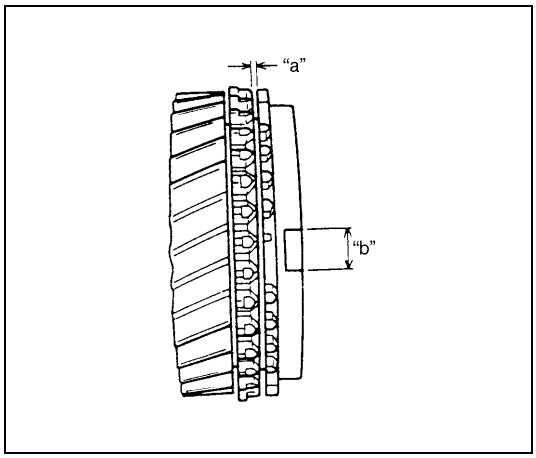

Check clearance "a" between synchronizer ring and gear, key slot width "b" in synchronizer ring and each chamfered tooth of gear and synchronizer ring and replace with new one, if necessary. Also, check gear tooth.

Clearance "a" between synchronizer ring and gear (input shaft):
Standard: 1.0 – 2.0 mm (0.039 – 0.078 in.)
Service limit: 0.8 mm (0.032 in.)

Key slot width "b" (input shaft):
Standard: 10.0 – 10.2 mm (0.394 – 0.401 in.)
Service limit: 10.45 mm (0.411 in.)

Main shaft assembly

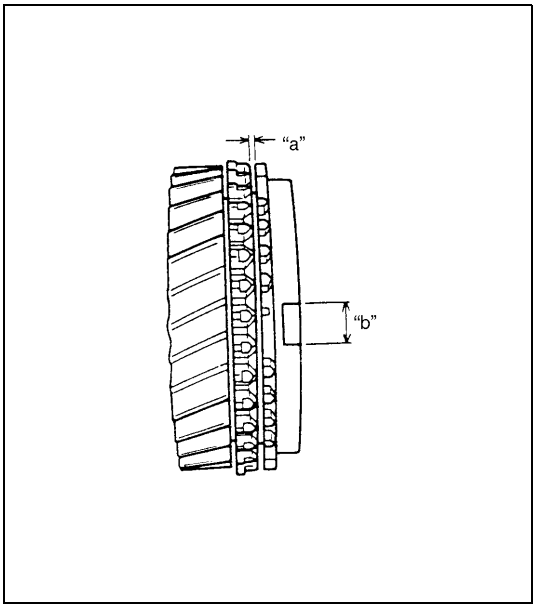

Check clearance "a" between synchronizer ring and gear, key slot width "b" in synchronizer ring and each chamfered tooth of gear and synchronizer ring and replace with new one, if necessary. Also, check gear tooth.

Clearance "a" between synchronizer ring and gear (Main shaft):
Standard: 1.0 – 2.0 mm (0.039 – 0.078 in.)
Service limit: 0.8 mm (0.032 in.)

Key slot width "b" (Main shaft):
1st, 2nd:
Standard: 12.2 – 12.4 mm (0.481 – 0.488 in.)
Service limit: 12.65 mm (0.498 in.)
3rd:
Standard: 10.0 – 10.2 mm (0.394 – 0.401 in.)
Service limit: 10.45 mm (0.411 in.)

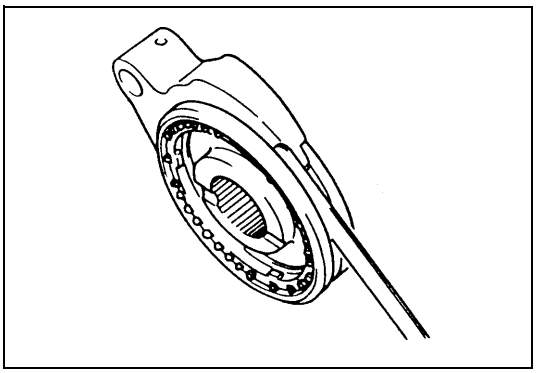

- Check clearance between fork and sleeve.
  If clearance exceeds limit, replace fork and sleeve.

Clearance between fork and sleeve:
Standard: 0.15 – 0.35 mm (0.006 – 0.013 in.)
Limit: 1.0 mm (0.039 in.)

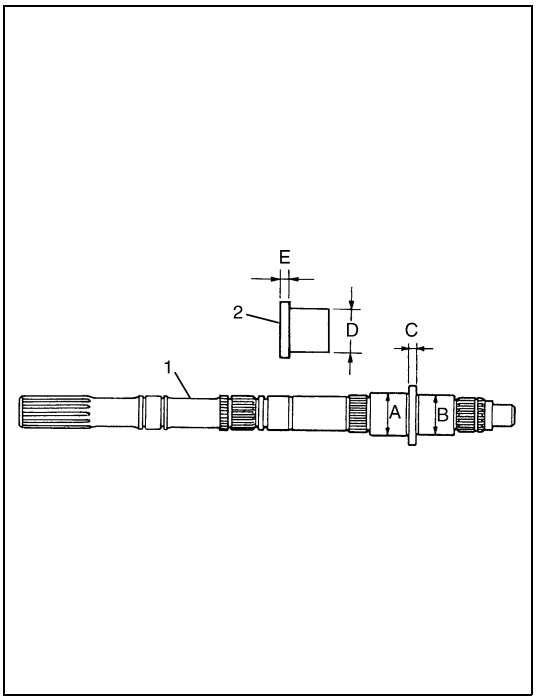

- Check diameter of main shaft (1)/needle bush (2) and thickness of main shaft (1)/needle bush (2) flanges as shown in the figure. If measured value is out of specification, replace them (or it).

Main shaft/needle bush specification (diameter and thickness):

Measuring portion	Standard
A	37.984 – 38.000 mm (1.4955 – 1.4960 in.)
B	34.984 – 35.000 mm (1.3774 – 1.3779 in.)
C	4.80 – 5.20 mm (0.1840 – 0.2047 in.)
D	38.985 – 39.000 mm (1.5348 – 1.5354 in.)
E	3.955 – 4.195 mm (0.1558 – 0.1651 in.)

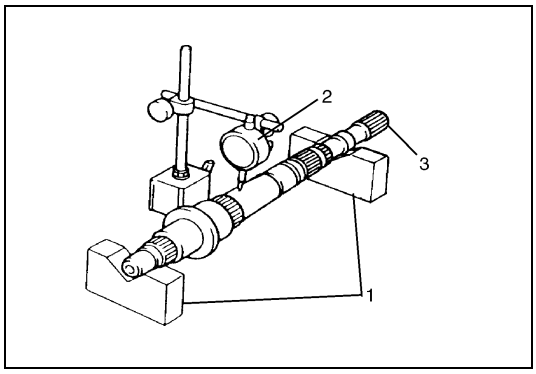

- Using “V” blocks (1) and dial gauge (2), check runout.
  If runout exceeds limit below, replace main shaft (3).

Main shaft runout:
limit: 0.06 mm (0.0023 in.)

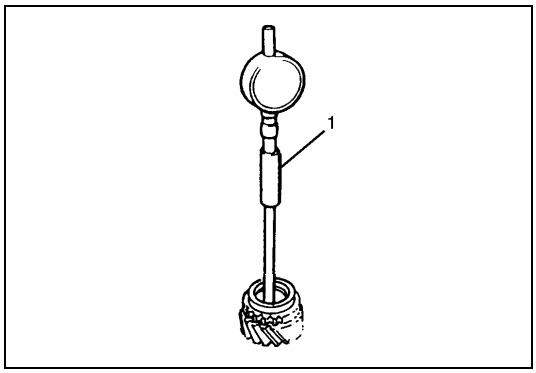

- Using cylinder gauge (1), check inside diameter of each gear. If its inside diameter exceeds specification, replace it.

Inside diameter of gear:

	Standard
1st gear	44.015 – 44.040 mm (1.7329 – 1.7338 in.)
2nd gear	
3rd gear	

- Check chamfered part of each sleeve for damage and excessive wear, and replace as necessary.
- Check each synchronizer key and synchronizer spring and replace as necessary.
- Check splined portions and replace parts if excessive wear is found.

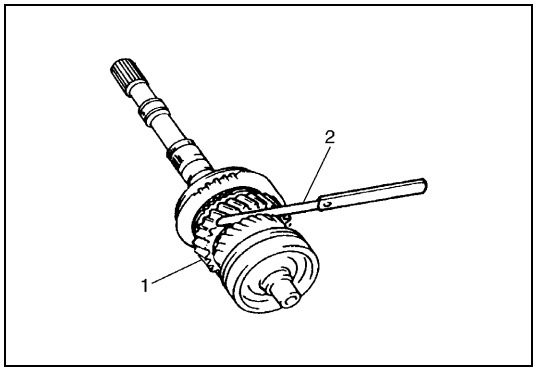

- Check 2nd gear (1) thrust clearance by using thickness gauge (2). If clearance is out of specification, repress-fit or replace defective part.

2nd gear thrust clearance:
Standard: 0.10 – 0.25 mm (0.004 – 0.009 in.)

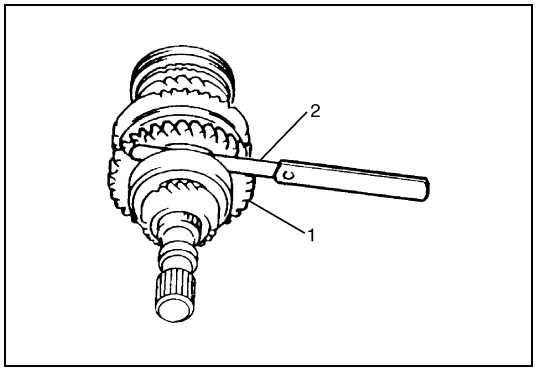

- Check low gear (1) thrust clearance by using thickness gauge (2).
  If clearance is out of specification, repress-fit or replace mainshaft bearing and 5th gear.

Low gear thrust clearance:
Standard: 0.10 – 0.25 mm (0.004 – 0.009 in.)

Counter shaft and reverse idle gear

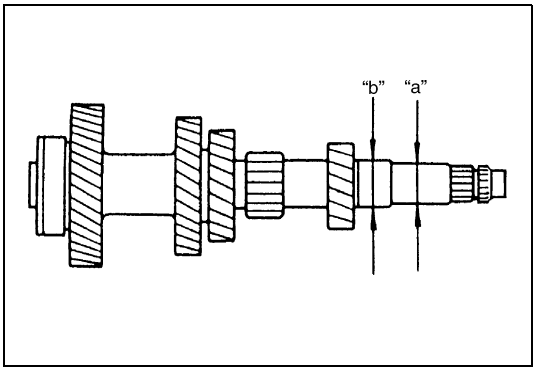

- Using micrometer, check diameter of counter shaft as shown in the figure. If measured valve is out of specification, replace it.

Counter shaft diameter (standard):
"a": 25.986 – 26.00 mm (1.0231 – 1.0236 in.)
"b": 30.957 – 30.972 mm (1.2188 – 1.2193 in.)

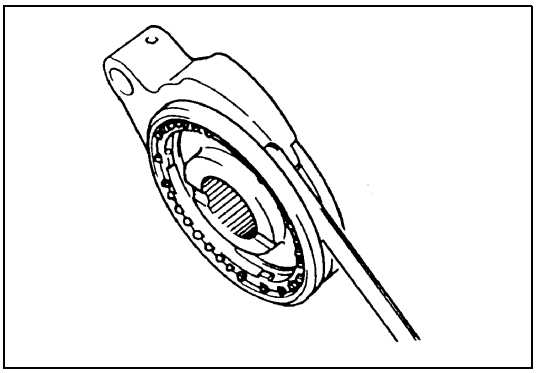

- Check clearance between fork and sleeve.
  If clearance exceeds limit, replace fork and sleeve.

Clearance between fork and sleeve:
Standard: 0.15 – 0.35 mm (0.006 – 0.013 in.)
Limit: 1.0 mm (0.039 in.)

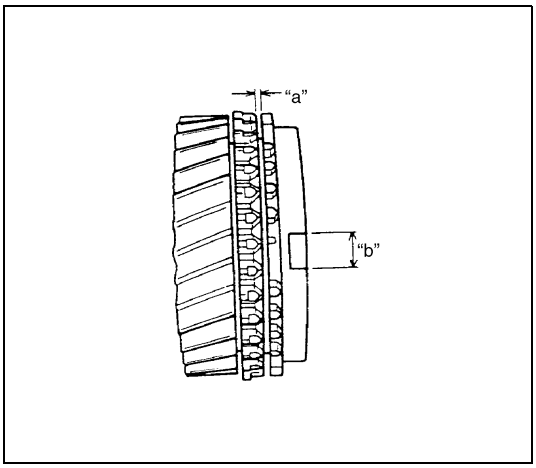

- Check clearance "a" between synchronizer ring and gear, key slot width "b" in synchronizer ring and each chamfered tooth of gear and synchronizer ring and replace with new one, if necessary. Also, check gear tooth.

Clearance "a" between synchronizer ring and gear (counter shaft):
Standard: 1.0 – 2.0 mm (0.039 – 0.078 in.)
Service limit: 0.8 mm (0.032 in.)

Key slot width "b" (counter shaft):
Standard: 10.0 – 10.2 mm (0.394 – 0.4015 in.)
Service limit: 10.45 mm (0.411 in.)

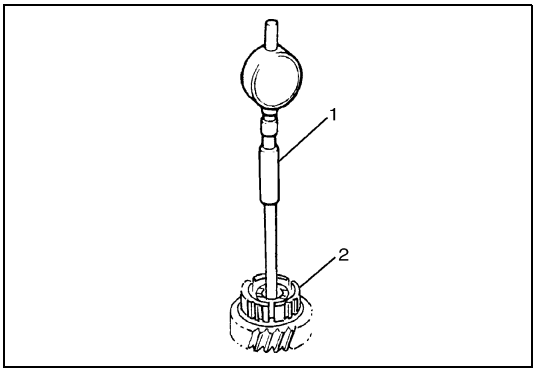

- Using cylinder gauge (1), check inside diameter of counter shaft 5th gear (2). If measured value exceeds specification, replace gear.

Counter shaft 5th gear diameter:
Standard: 33.015 – 33.040 mm (1.2999 – 1.3007 in.)

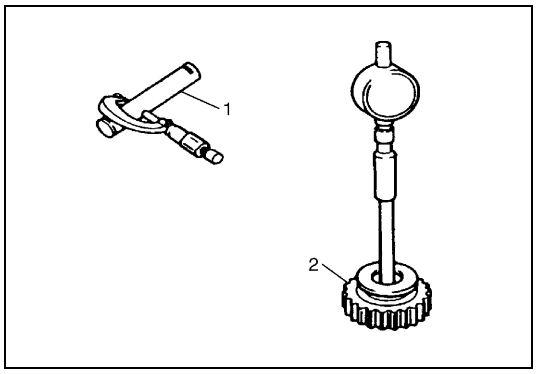

- Check oil clearance between reverse idle gear (2) and shaft (1) by measuring inside diameter of gear and diameter of shaft and calculate its clearance.
  If clearance exceeds limit, replace gear and shaft.

Oil clearance between reverse idle gear and shaft
Standard: 0.040 – 0.082 mm (0.0016 – 0.0032 in.)
Limit: 0.13 mm (0.005 in.)

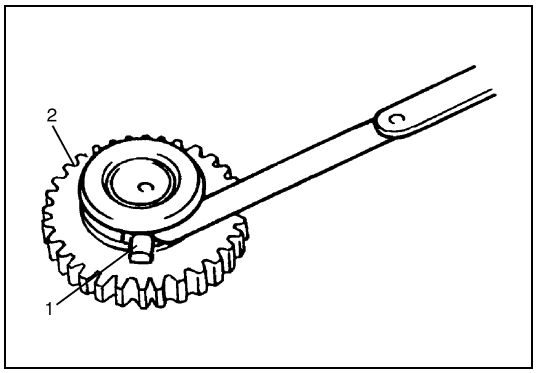

- Check clearance between reverse idle gear (2) and shoe (1) of reverse gear shift link.
  If clearance exceeds limit, replace shoe.

Clearance between reverse idle gear and shoe
Standard: 0.05 mm – 0.28 mm (0.002 – 0.011 in.)
Limit: 0.5 mm (0.019 in.)

Unit Assembly

Gear Shift Lever Case

1) Wash and inspect each part and replace if necessary. Also check item as described below and correct whatever necessary carefully by using reamer, oilstone and the like, wash it thoroughly and reassemble it.
   Item to be checked is;
   - Shift shaft should go into case smoothly.

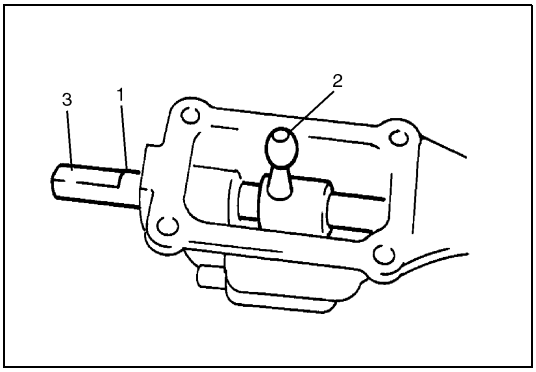

2) Insert shift shaft (1) as shown in the figure while making sure that inner parts are in proper direction.

NOTE:
- **Cut off portion (3) in shift shaft (1) should face downward when shift shaft (1) is installed.**
- **Shift lever (2) should be installed at the same time.**

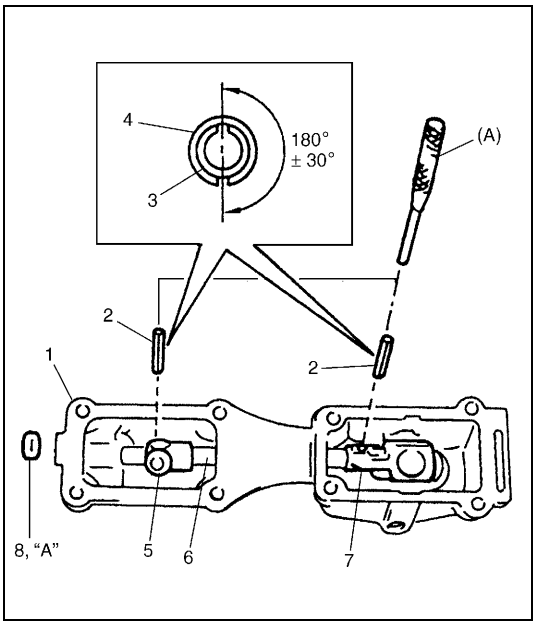

3) Drive in spring pins (2) for gear shift lever (5) and shift arm (7).

NOTE:
When driving in spring pins, position their slits 180° ± 30° apart.

Special tool
(A): 09925-78210

4) Apply sealant to new case plug (8) and drive it into lever case (1).

"A": Sealant 99000-31110

3.	Inner spring pin
4.	Outer spring pin
6.	Gear shift shaft

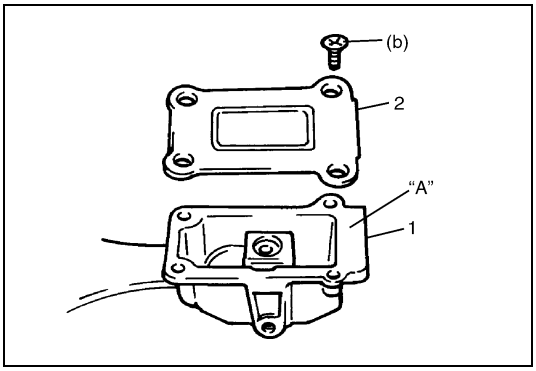

5) Clean mating surface of gear shift lever case (1) and case plate (2), and then apply sealant evenly to surface of gear shift lever case (1).

"A": Sealant 99000-31110

6) Tighten screws to specified torque.

Tightening torque
Gear shift lever case plate screw
(b): 6 N·m (0.6 kg-m, 4.5 lb-ft)

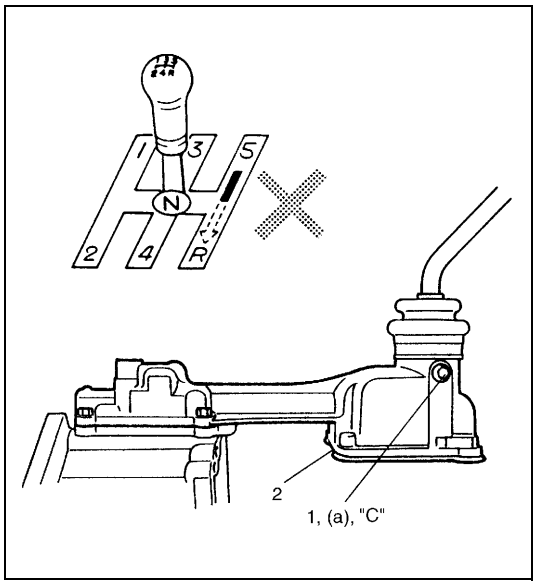

7) Install gear shift lever case (2) to transmission without using sealant for functional check.
8) Install shift control lever and check to make sure that it shifts smoothly according to shift pattern as shown in the figure.

NOTE:

- **Apply thread lock cement "C" to control lever locating bolts (1) when retightening.**
- **Be sure to apply sealant to mating surface of gear shift lever case (2) for its final installation.**

"C": Cement 99000-32020

Tightening torque
Control lever locating bolt
(a): 17 N·m (1.7 kg-m, 12.5 lb-ft)

Sub-Assembly

Input shaft assembly

NOTE:

- **Before installation, wash each part and apply specified gear oil to sliding faces of bearing and gear.**
- **Use new circlips on shaft for installation. Don't reuse circlips.**

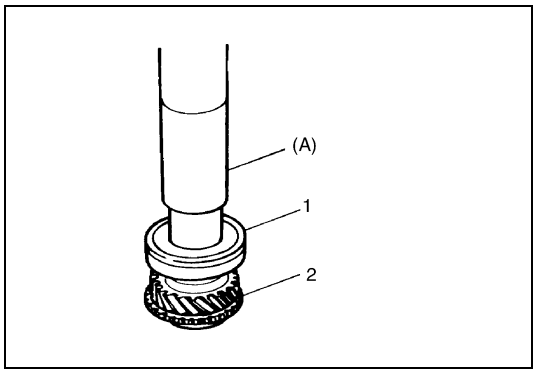

1) Bring bearing (1) so that its groove for circlip is in the front of input shaft (2) and press-fit with special tool and press.

Special tool
(A): 09940-51710

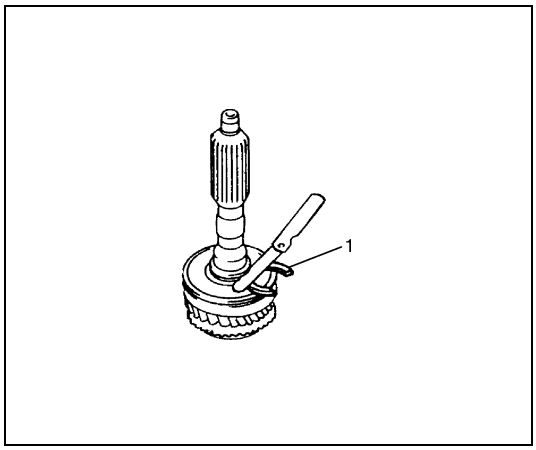

2) Select circlip (1) that will make thrust clearance of bearing 0.1 mm (0.0039 in) or less and install it.

Circlip thickness specification:

ID mark	Circlip thickness
0	2.05 – 2.10 mm (0.0807 – 0.0826 in.)
1	2.10 – 2.15 (0.0827 – 0.0846 in.)
2	2.15 – 2.20 (0.0847 – 0.0866 in.)
3	2.20 – 2.25 (0.0867 – 0.0885 in.)
4	2.25 – 2.30 (0.0886 – 0.0905 in.)
5	2.30 – 2.35 (0.0906 – 0.0925 in.)

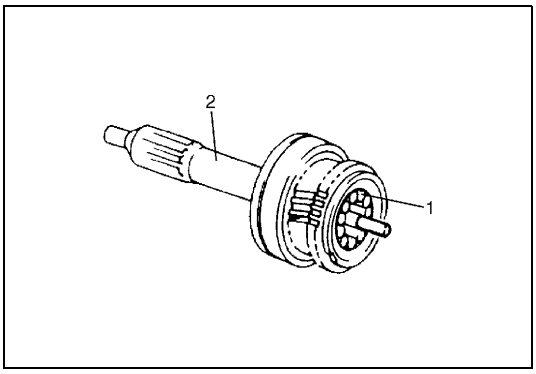

3) Apply grease to bearing roller (1) and install it to input shaft (2).

Grease: 99000-25010

Main shaft assembly

NOTE:

- **Before installation, wash each part and apply specified gear oil to sliding faces of bearing and gear.**
- **Use new circlips on shaft for installation. Don't reuse circlips.**

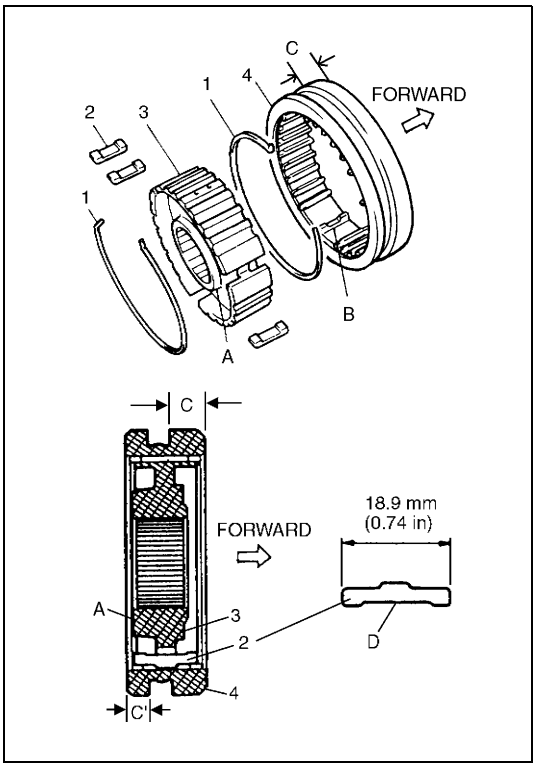

1) Assemble high speed synchronizer hub (3), sleeve (4), springs (1) and keys (2) according to the following procedure.
   a) Slide hub (3) in sleeve (4) so that wider flange side of sleeve (4) and boss side of hub (3) face opposite as shown in the figure, also aligning hub slots with key location teeth of sleeve (4).
   b) Insert keys (2) in hub slots with depression side of keys face center of hub (3).
   c) Install springs (1) to internal circle of key locations with spring end gaps apart at angles about 120 degrees each other, in order to apply spring tension equally to each key.

NOTE:

Do not mix high and low speed synchronizer keys as dimensions are different.

A:	Boss
B:	Key location teeth
C:	Wider flange (C>C')
D:	Depression of key

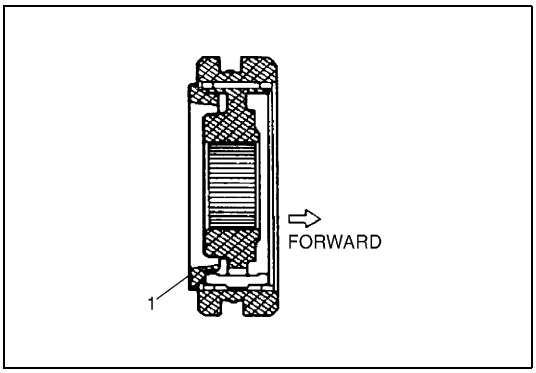

2) Install synchronizer ring (1) by matching its key slots to keys as shown in the figure.

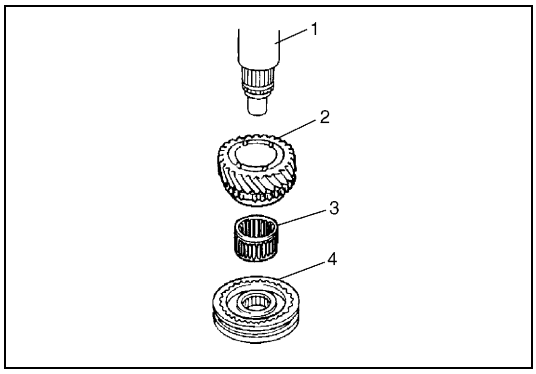

3) Insert 3rd gear, (2) needle bearing (3) and high speed sleeve/hub assembly (4) with synchronizer ring to main shaft (1).

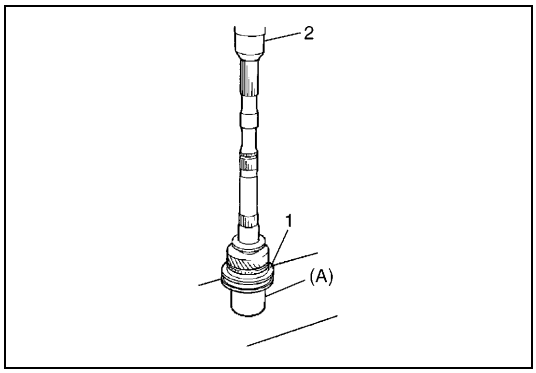

4) Press-fit high speed sleeve/hub assembly (1) with special tool and press (2).

Special tool
(A): 09940-53111

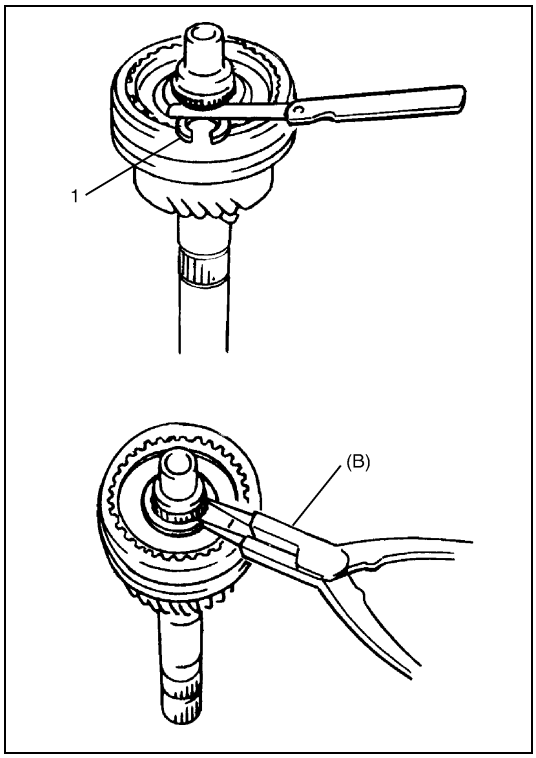

5) Select circlip (1) that will make thrust clearance of clutch hub 0.1 mm (0.0039 in) or less and install it.

Circlip thickness specification:

ID mark	Circlip thickness
C – 1	1.75 – 1.80 mm (0.0689 – 0.0708 in.)
D	1.80 – 1.85 mm (0.0709 – 0.0728 in.)
D – 1	1.85 – 1.90 mm (0.0729 – 0.0748 in.)
E	1.90 – 1.95 mm (0.0749 – 0.0767 in.)
E – 1	1.95 – 2.00 mm (0.0768 – 0.0787 in.)
F	2.00 – 2.05 mm (0.0788 – 0.0807 in.)
F – 1	2.05 – 2.10 mm (0.0808 – 0.0826 in.)

Special tool
(B): 09900-06107

6) After installing circlip, check that 3rd gear turns lightly.

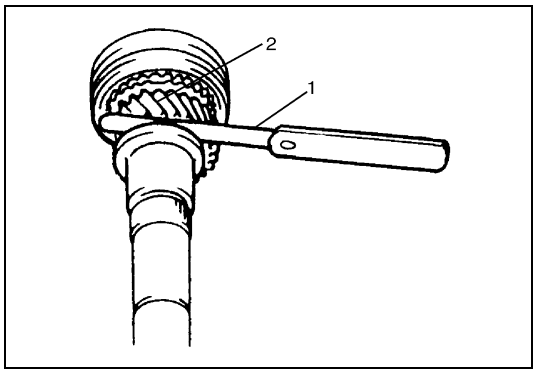

7) Check 3rd gear (2) thrust clearance by using thickness gauge (1). If clearance is out of specification, repress-fit or replace.

3rd gear thrust clearance:
Standard: 0.10 – 0.25 mm (0.004 – 0.009 in.)

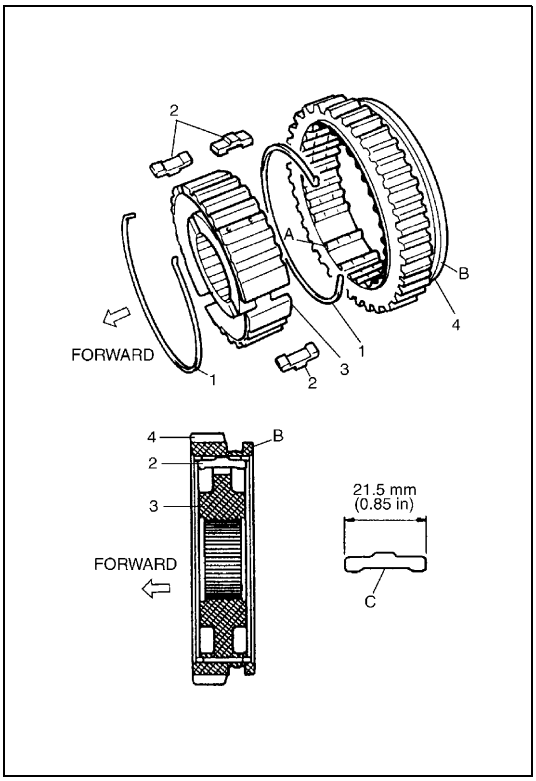

8) Assemble low speed synchronizer hub (3), sleeve (4), springs (1) and keys (2) according to the following procedure.
   a) Slide hub (3) in sleeve (4) with aligning hub slots with key location teeth of sleeve (4).
   b) Insert keys (2) in hub slots with depression side of keys (2) face center of hub (3).
   c) Install springs (1) to internal circle of key locations with spring end gaps apart at angles about 120 degrees each other, in order to apply spring tension equally to each key.

NOTE:

Before installing hub (3), sleeve (4), springs (1) and keys (2) assembly to main shaft, there is no specific installation direction on each component. However, when installing assembly to main shaft, gear side of sleeve (4) should face to forward direction as shown in the figure.

A:	Key location tooth
B:	Flange
C:	Depression of key

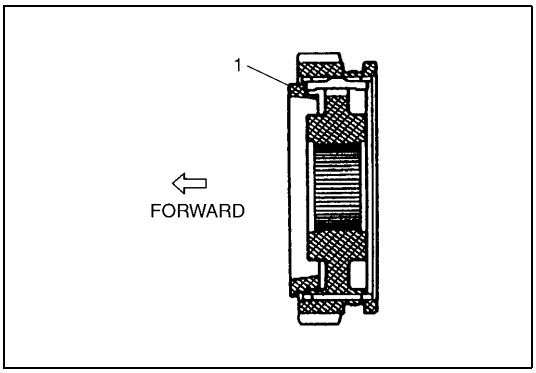

9) Install synchronizer ring (1) by matching its key slots to keys as shown in the figure.

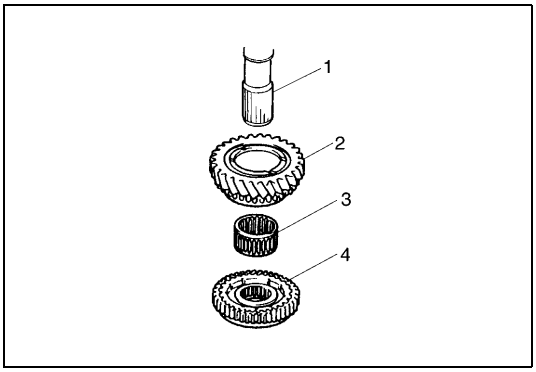

10) Insert 2nd gear (2), needle bearing (3) and low speed sleeve/hub assembly (4) with synchronizer ring to main shaft (1).

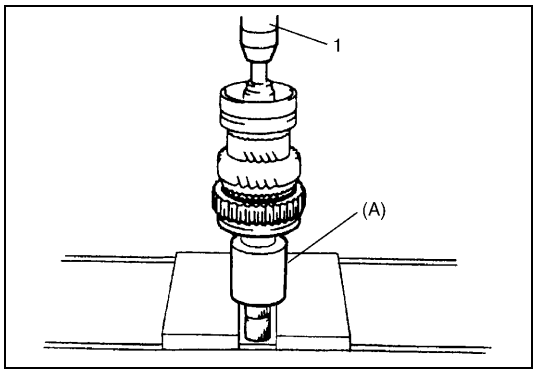

11) Press-fit low speed sleeve/hub assembly with special tool and press (1).

Special tool
(A): 09940-53111

12) Check 2nd gear thrust clearance, referring to “Main Shaft Assembly” in this section.

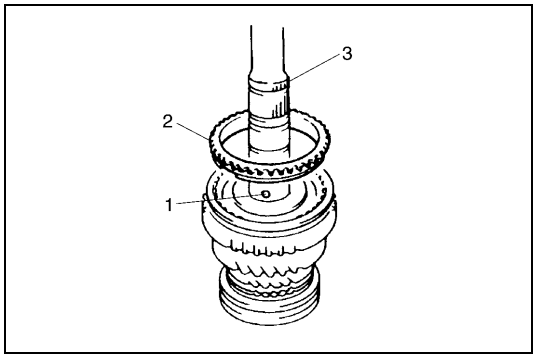

13) Apply grease to ball (1) and set it to main shaft (3).
14) Install synchronizer ring (2).

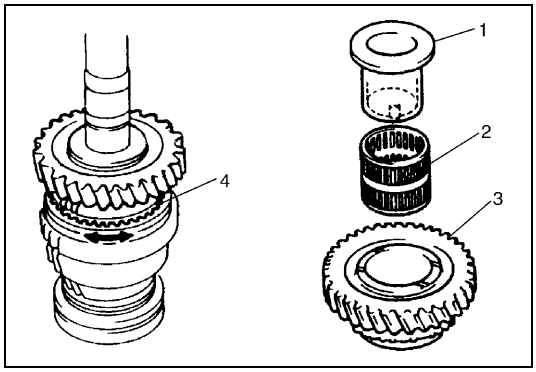

15) Install needle bearing (2), low gear (3) and needle bush (1) to main shaft.

NOTE:

- **Check the cut in needle bush and ball are engaged.**
- **After installation, check the synchronizer ring (4) moves in circumferential direction.**

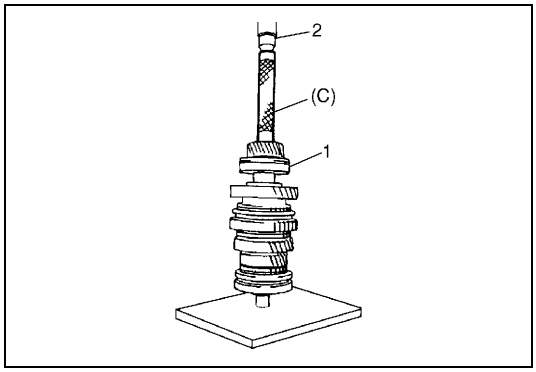

16) Press-fit main shaft bearing (1) and 5th gear with special tools and press (2).

NOTE:

Bring bearing so that its groove for circlip is in the rear.

Special tool
(C): 09940-51710 or 09925-18011

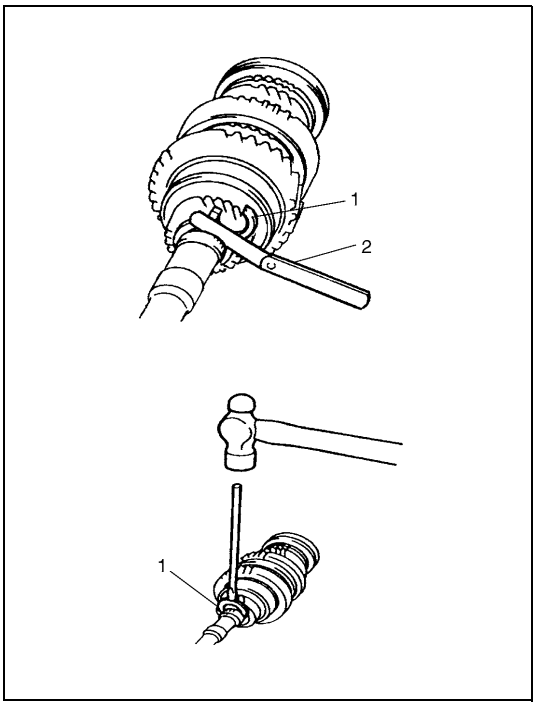

17) Select circlip (1) that will make its thrust clearance 0.1 mm (0.0039 in.) or less and install it.

Circlip thickness specification:

ID mark	Circlip thickness
A	2.67 – 2.72 mm (0.1052 – 0.1070 in.)
B	2.73 – 2.78 mm (0.1075 – 0.1094 in.)
C	2.79 – 2.84 mm (0.1099 – 0.1118 in.)
D	2.85 – 2.90 mm (0.1123 – 0.1141 in.)
E	2.91 – 2.96 mm (0.1146 – 0.1165 in.)
F	2.97 – 3.02 mm (0.1170 – 0.1188 in.)
G	3.03 – 3.08 mm (0.1193 – 0.1212 in.)
H	3.09 – 3.14 mm (0.1217 – 0.1236 in.)
J	3.15 – 3.20 mm (0.1241 – 0.1259 in.)
K	3.21 – 3.26 mm (0.1264 – 0.1283 in.)
L	3.27 – 3.32 mm (0.1288 – 0.1307 in.)

2. Thickness gauge

18) Check low gear clearance, referring to “Main Shaft Assembly” in this section.

Counter shaft and reverse idle gear

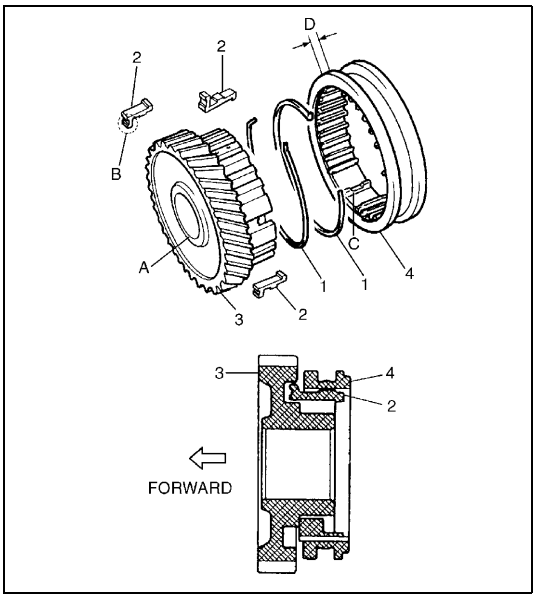

1) Fit sleeve (4) to counter shaft 5th gear (3), place 3 synchronizer keys (2) in it and then set synchronizer springs (1). Refer to the figure for proper installing direction of gear, sleeve and springs. Also, note that key has specific installing direction.

A:	Reverse side (front)
B:	5th side
C:	Key position
D:	5th side (thick)

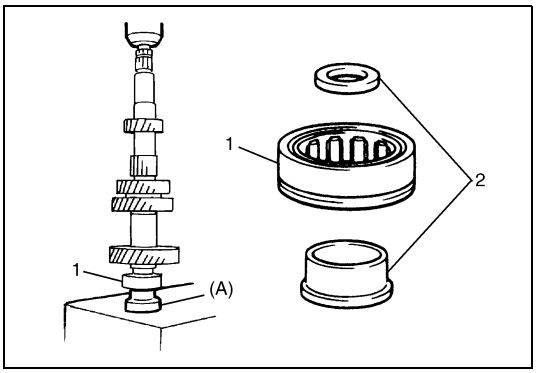

2) Set inner race (2) to counter shaft front bearing (1) and press-fit bearing with press and special tool.

NOTE:

When installing bearing, bring it so that its groove for circlip is in the front.

Special tool
(A): 09940-54950

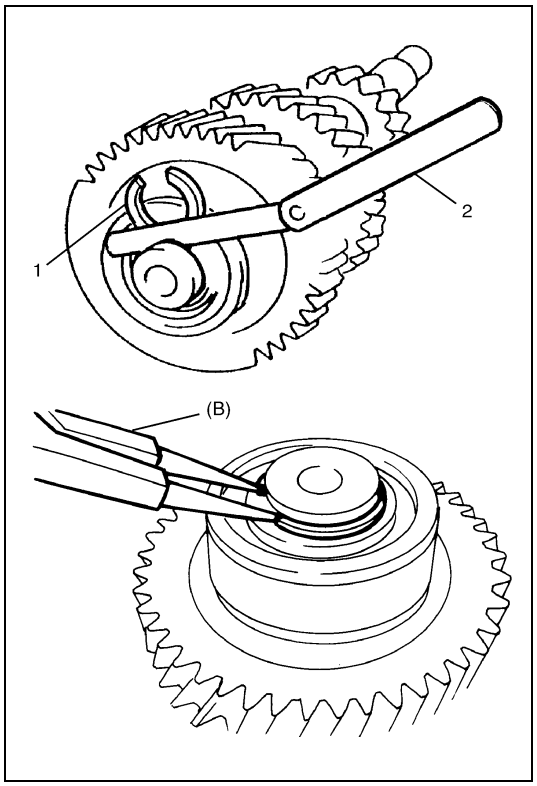

3) Select circlip that will make its thrust clearance 0.1 mm (0.0039 in.) or less and install it.

Circlip thickness specification:

ID mark	Circlip thickness
1	2.05 – 2.10 mm (0.0807 – 0.0826 in.)
2	2.10 – 2.15 mm (0.0827 – 0.0846 in.)
3	2.15 – 2.20 mm (0.0847 – 0.0866 in.)
4	2.20 – 2.25 mm (0.0867 – 0.0885 in.)
5	2.25 – 2.30 mm (0.0886 – 0.0905 in.)
6	2.30 – 2.35 mm (0.0906 – 0.0925 in.)

Special tool
(B): 09900-06107

1.	Circlip
2.	Thickness gauge

Input shaft bearing retainer and oil seal

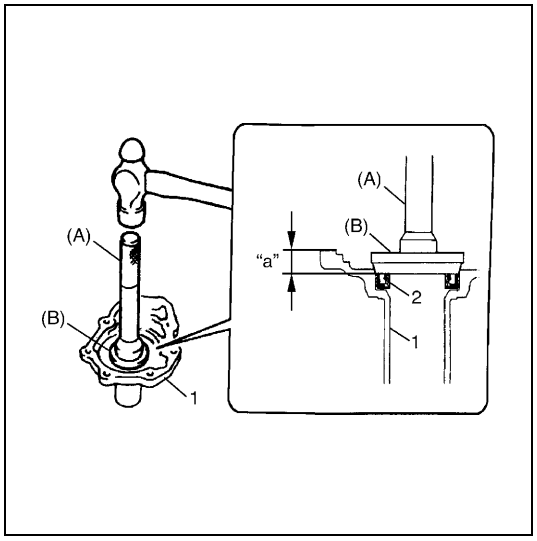

Install new oil seal (2) to bearing retainer (1) by using special tool as shown in the figure.
Apply grease to oil seal lip.

Grease: 99000-25010

Special tool
(A): 09913-75821
(B): 09924-84510-004

Oil seal installing position
"a": 12.2 – 13.2 mm (0.49 – 0.51 in.)

Transmission rear case

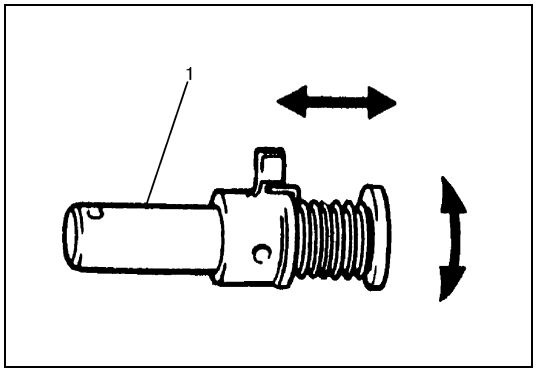

1) Check that interlock cam component (1) moves smoothly in both turning direction and sliding direction.

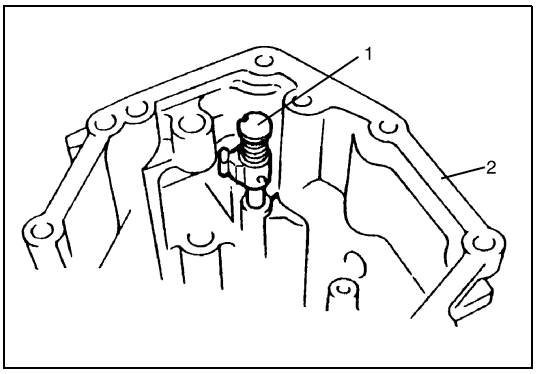

2) Insert interlock cam component (1) to rear case (2).

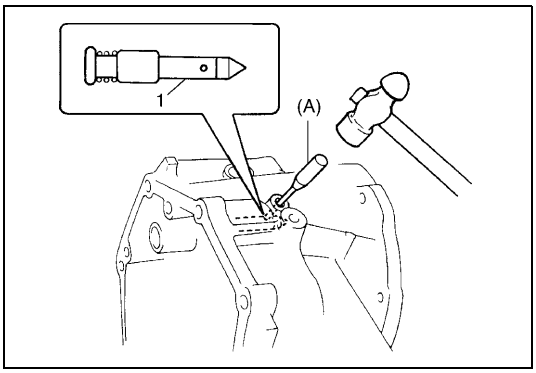

3) Set interlock cam component (1) as shown in the figure and drive pin by using special tool.

Special tool
(A): 09922-85811

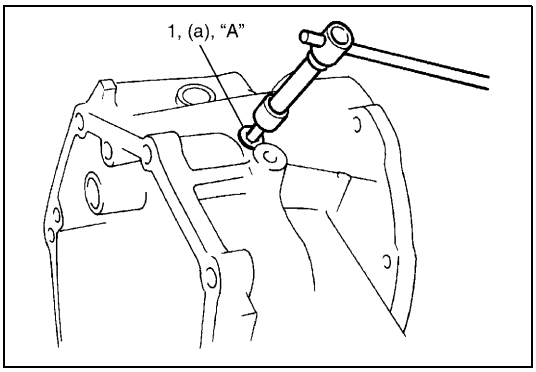

4) Apply thread lock cement to thread of interlock cam plug (1) and tighten it to specification.

"A": Cement 99000-32020

Tightening torque
Interlock cam plug
(a): 19 N·m (1.9 kg-m, 14.0 lb-ft)

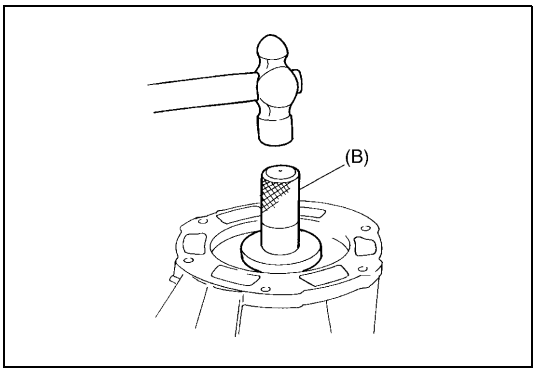

5) Install oil seal to rear case so that end surface of oil seal becomes flush with that case. Apply grease to oil seal lip.

Grease: 99000-25010

Special tool
(B): 09913-77510

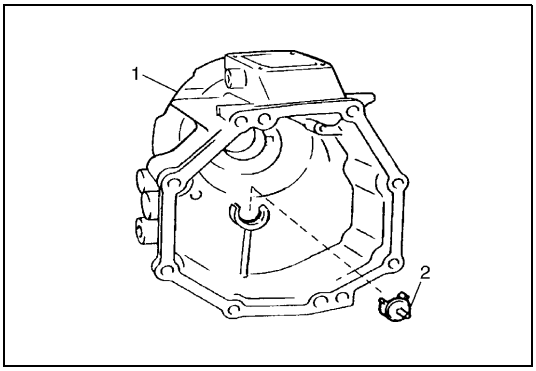

6) Install counter shaft gutter (2) to transmission rear case (1).

Transmission intermediate case and front case (location of knock and plug)

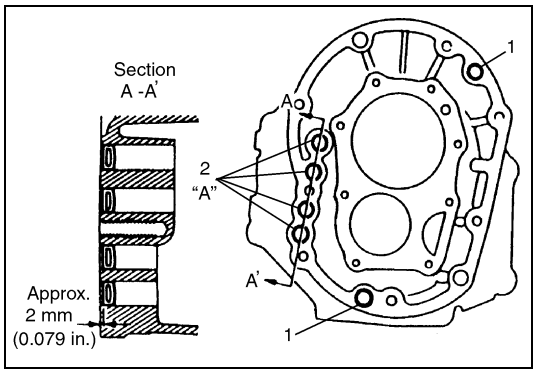

- Install knock pin (1) and plug (2) (sealant applied) to front case as shown.

"A": Sealant 99000-31110

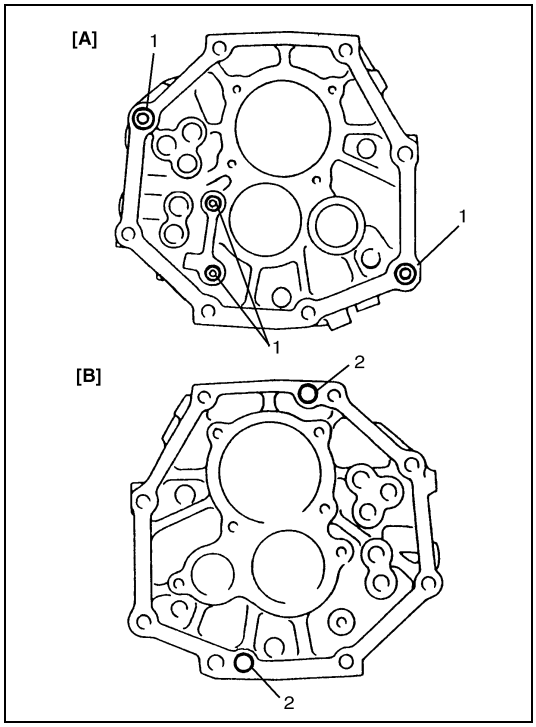

- Install knock pin (2)/ring pin (1) as shown in the figure.

[A]:	Front side
[B]:	Rear side

Transmission Unit

NOTE:

- **Before installation, wash each part and apply specified gear oil to sliding faces of bearing and gear.**
- **Use new circlips on shaft for installation. Don't reuse circlips.**

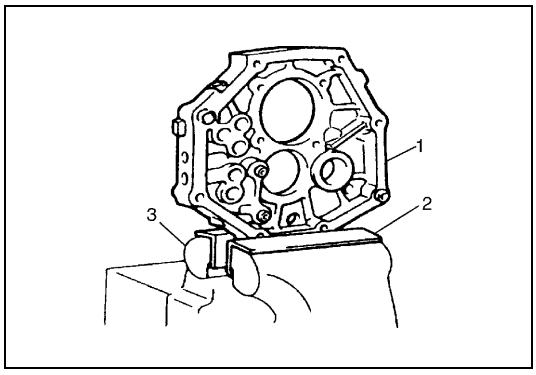

1) Set intermediate case (1) to vise (3).
   Clean mating surfaces of intermediate case both sides, if intermediate case is reused.

2.	Aluminum plate

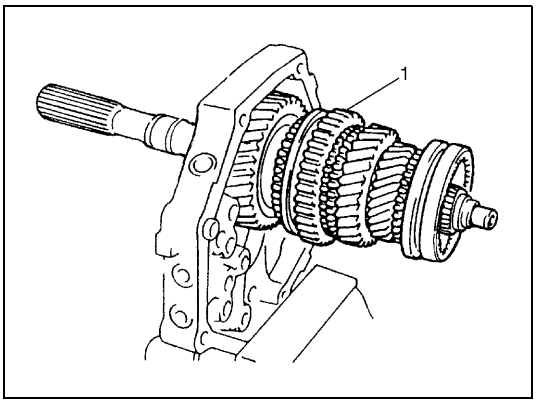

2) Install main shaft assembly (1) to intermediate case.

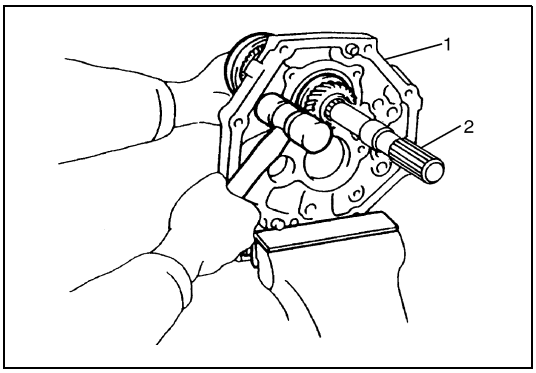

NOTE:

When fitting of intermediate case (1) and bearing is tight, tap rear face of intermediate case (1) with plastic hammer lightly as it will cause main shaft assembly (2) to install.

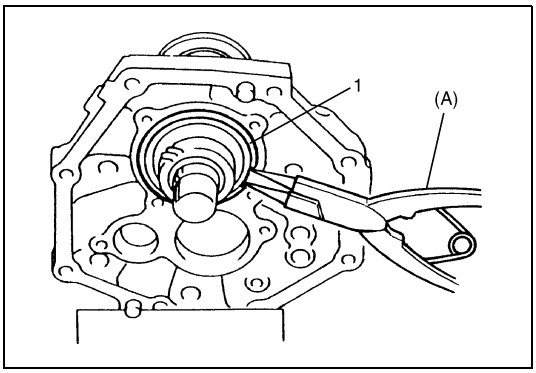

3) Fix with C-ring (1) by using special tool.

Special tool
(A): 09900-06107

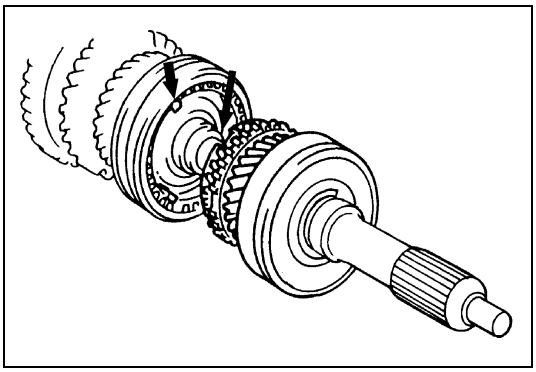

4) Align key slots of synchronizer ring and synchronizer keys and set input shaft assembly to main shaft assembly.
   Check that input shaft assembly turns lightly.
5) Fix with C-ring to counter shaft rear bearing.

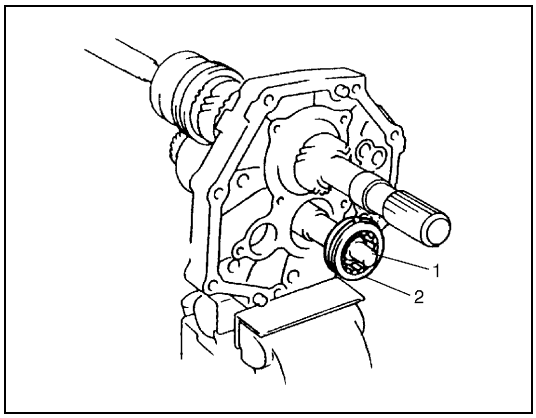

6) Install counter shaft (1) and rear bearing (2) to intermediate case.

NOTE:

- **When installing bearing, bring it so that its C-ring side is at rear side of intermediate case as shown in the figure.**
- **When fitting of intermediate case and bearing is tight, tap outer race of bearing lightly and evenly with plastic hammer.**

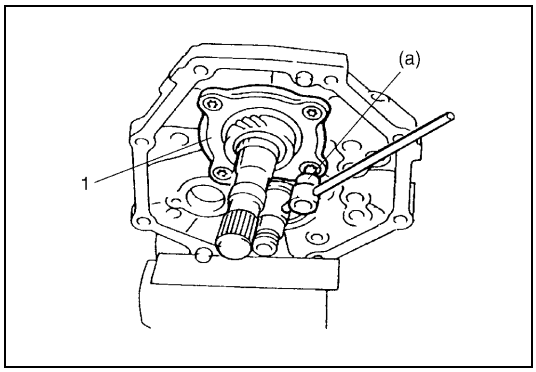

7) Install bearing plate (1).

Tightening torque
Bearing plate bolt
(a): 19 N·m (1.9 kg-m, 14.0 lb-ft)

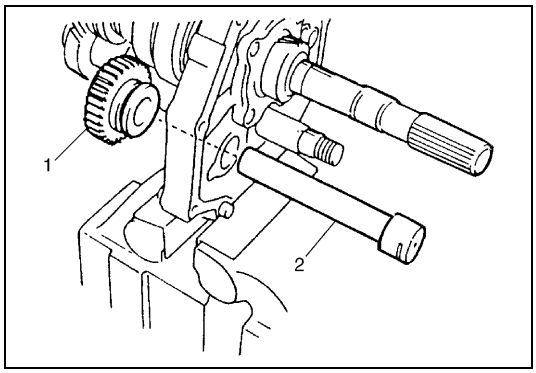

8) Install reverse idle gear (1) and shaft (2).

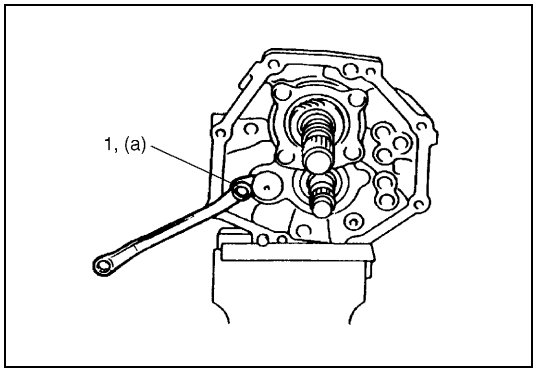

9) Tighten reverse gear shaft bolt (1) to specification.

Tightening torque
Reverse gear shaft bolt
(a): 18 N·m (1.8 kg-m, 13.5 lb-ft)

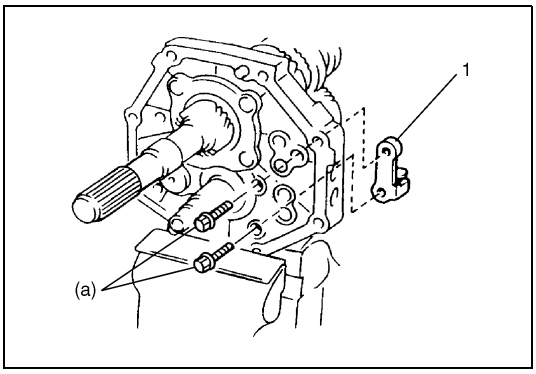

10) Install reverse link stay (1).

Tightening torque
Reverse link stay bolt
(a): 19 N·m (1.9 kg-m, 14.0 lb-ft)

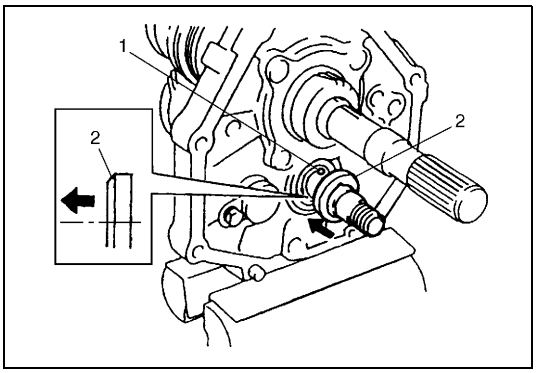

11) Set ball (1) and thrust washer (2) to counter shaft.

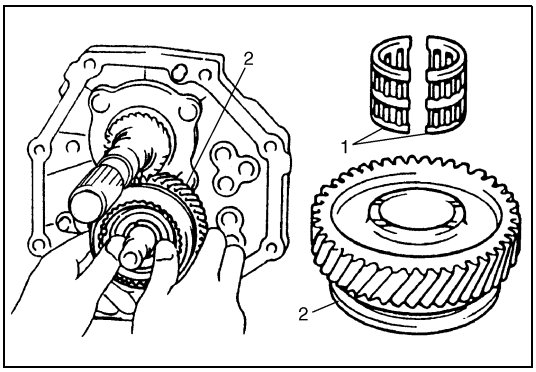

12) Install needle bearing (1), counter shaft 5th gear (2) and synchronizer ring.

NOTE:

When setting synchronizer ring to sleeve of 5th gear, align synchronizer key slot to key.

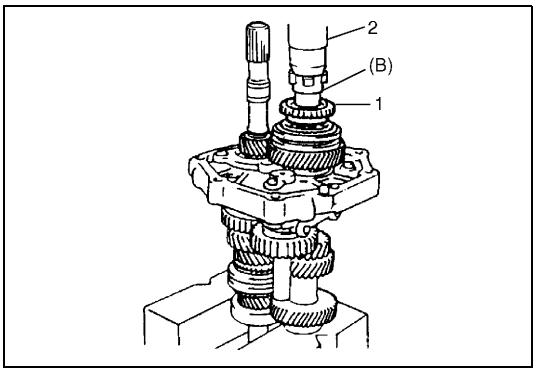

13) Press-fit 5th speed synchronizer dog (1) to counter shaft with press (2) and special tool.

Special tool
(B): 09927-08220

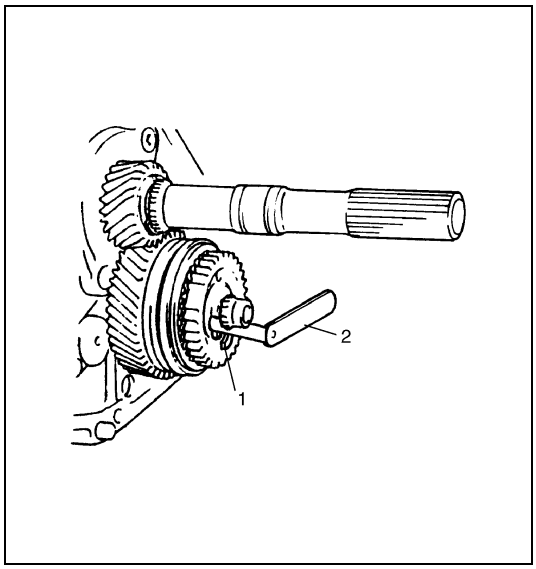

14) Select circlip (1) that will make clearance in circlip groove 0.1 mm (0.0039 in.) or less.

Circlip thickness specification:

ID mark	Circlip thickness
A	2.80 – 2.85 mm (0.1103 – 0.1122 in.)
B	2.85 – 2.90 mm (0.1122 – 0.1141 in.)
C	2.90 – 2.95 mm (0.1142 – 0.1161 in.)
D	2.95 – 3.00 mm (0.1162 – 0.1181 in.)
E	3.00 – 3.05 mm (0.1182 – 0.1200 in.)
F	3.05 – 3.10 mm (0.1201 – 0.1220 in.)
G	3.10 – 3.15 mm (0.1221 – 0.1240 in.)

2. Thickness gauge

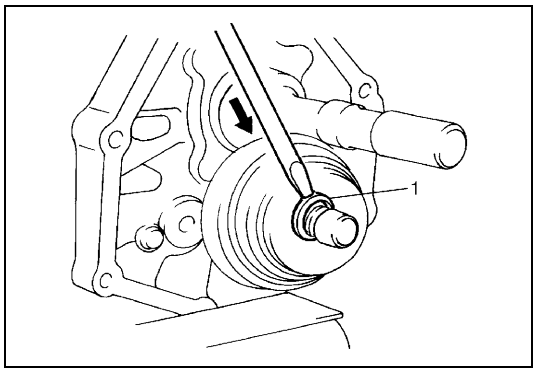

15) Fix with circlip (1) as shown in the figure and check that counter 5th gear turns lightly.

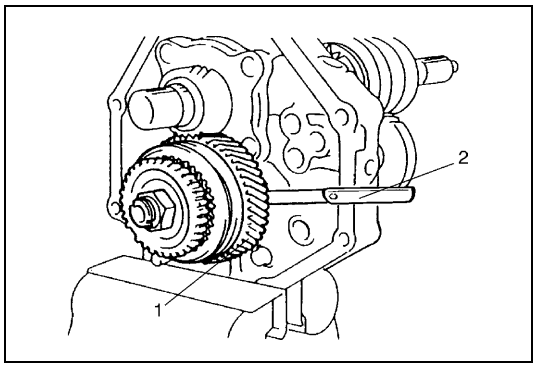

16) Check counter 5th gear (1) thrust clearance by using thickness gauge (2).

Counter 5th gear thrust clearance:
Standard: 0.1 – 0.3 mm (0.0040 – 0.0118 in.)

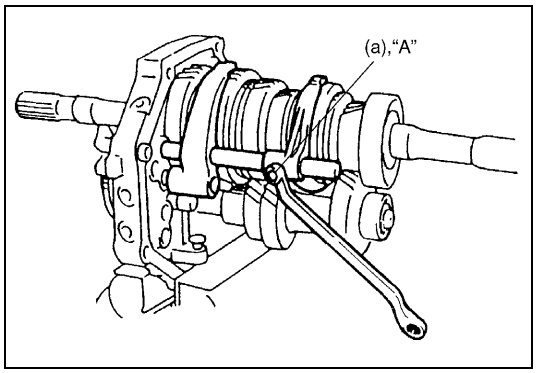

17) Install low speed gear shift fork, high speed gear shift fork and shaft.
18) Apply thread lock cement to thread of fork bolt and tighten bolt to specification.

"A": Cement 99000-32020

Tightening torque
Shift fork bolt
(a): 20 N·m (2.0 kg-m, 14.5 lb-ft)

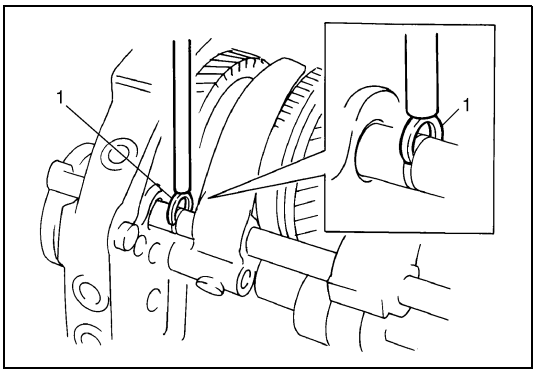

19) Fix new circlip (1) to high gear shift shaft by using lever or the like and hammer.

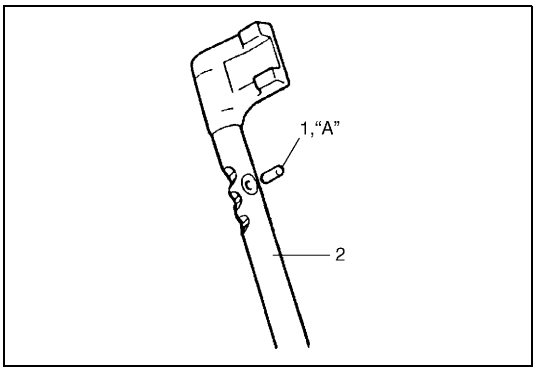

20) Apply grease "A" to locating roller No.2 (1) and install roller (1) to low gear shift shaft (2).

"A": Grease 99000-25010

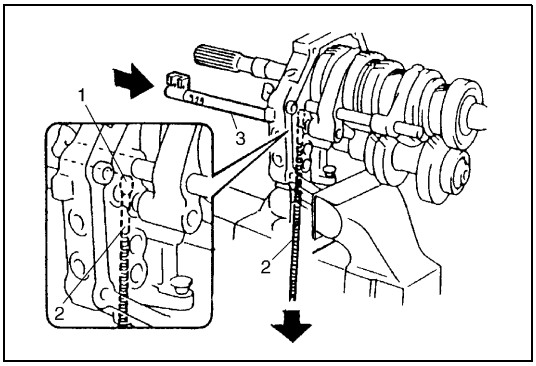

21) Supporting locating roller No. 3 (1) by magnet (2), insert low gear shift shaft (3) to intermediate case and low speed gear shift fork.

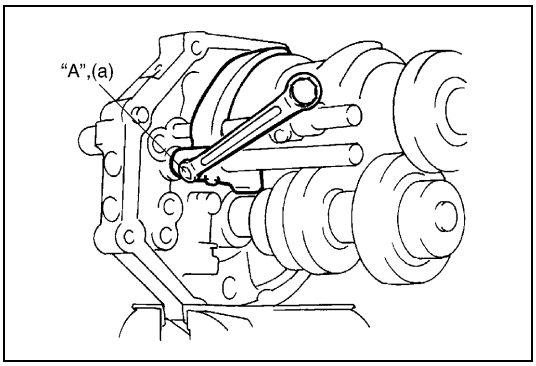

22) Apply thread lock cement "A" to thread of fork bolt and tighten bolt to specification.

"A": Cement 99000-32020

Tightening torque
Shift fork bolt
(a): 20 N·m (2.0 kg-m, 14.5 lb-ft)

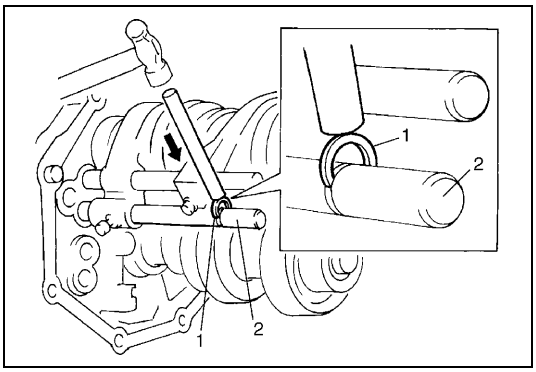

23) Fix with new circlip (1) to low gear shift shaft (2) by using lever or the like and hammer.

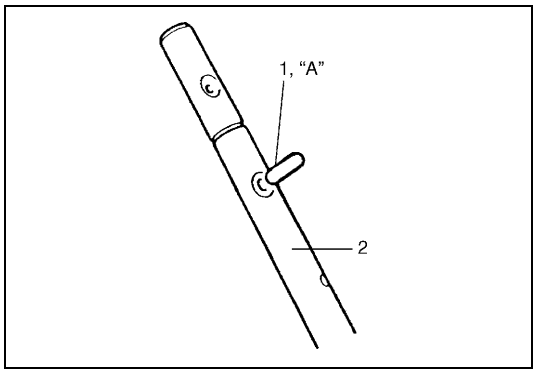

24) Apply grease to locating roller No.2 (1) and install roller (1) to reverse gear shift shaft (2).

"A": Grease 99000-25010

25) Assemble reverse gear shift link assembly.

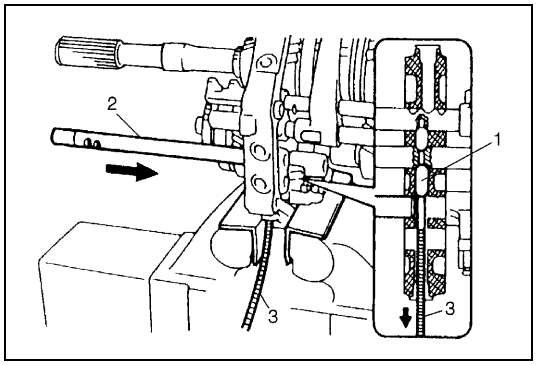

26) Insert reverse gear shift shaft (2) into reverse gear shift link assembly and intermediate case while holding locating roller No.1 (1) with magnet (3).
27) Supporting locating roller No.1 (1) with magnet (3), insert reverse gear shift shaft (2) into reverse gear shift link and intermediate case.

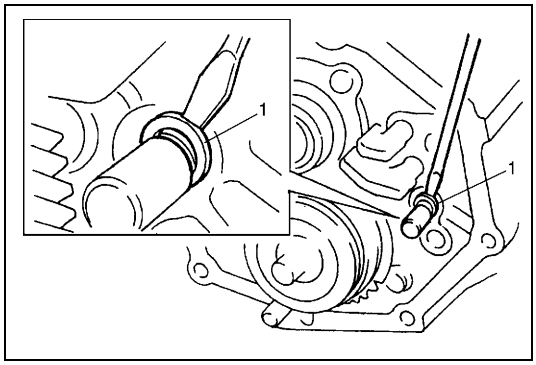

28) Fix with new circlip (1) to reverse gear shift shaft by using rod or the like and hammer.

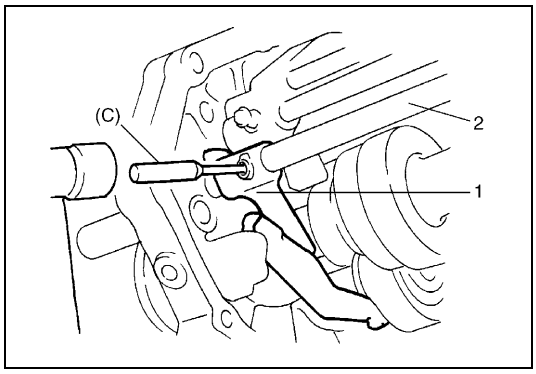

29) Drive pin into reverse gear shift link (1) and shaft (2) by using special tool.

Special tool
(C): 09922-85811

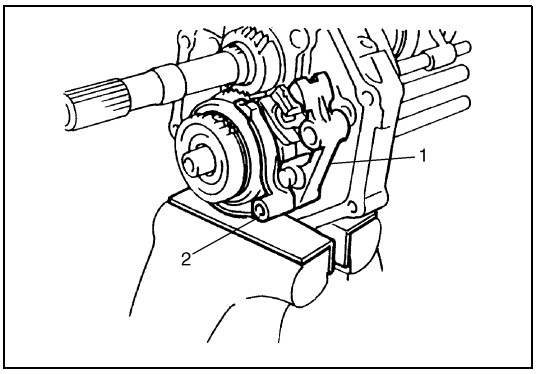

30) Install reverse gear shift yoke (1) and 5th gear shift fork (2) as shown in the figure.

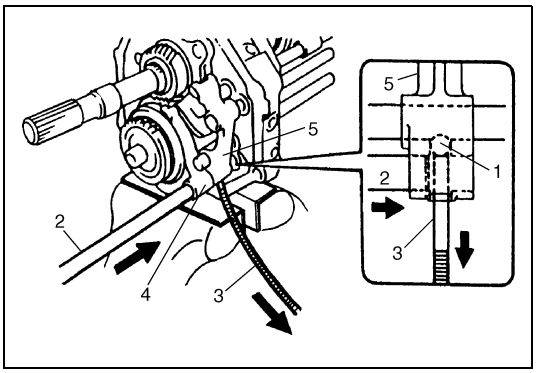

31) Supporting ball (1) with magnet (3) as shown, in the figure insert 5th gear shift shaft (2) to 5th gear shift fork (4) and reverse gear shift yoke (5).

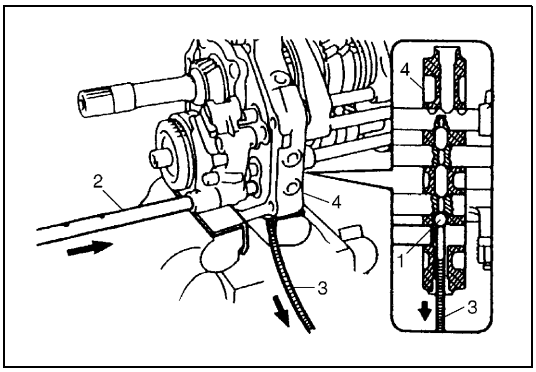

32) Supporting ball (1) with magnet (3) as shown in the figure, insert 5th gear shift shaft (2) into intermediate case (4).

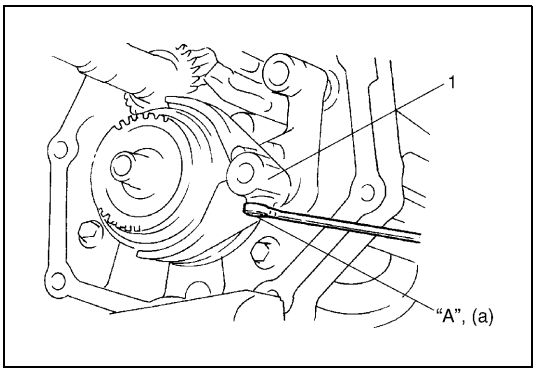

33) Apply thread lock cement "A" to thread of fork bolt and tighten bolt to specification.

"A": Cement 99000-32020

Tightening torque
5th gear shift fork bolt
(a): 20 N·m (2.0 kg-m, 14.5 lb-ft)

1. 5th gear shift fork

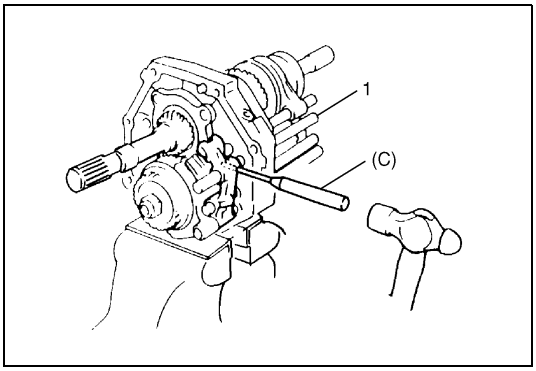

34) Insert 5th-reverse gear shift shaft (1) to reverse gear shift yoke and drive pin into shaft and yoke.

Special tool
(C): 09922-85811

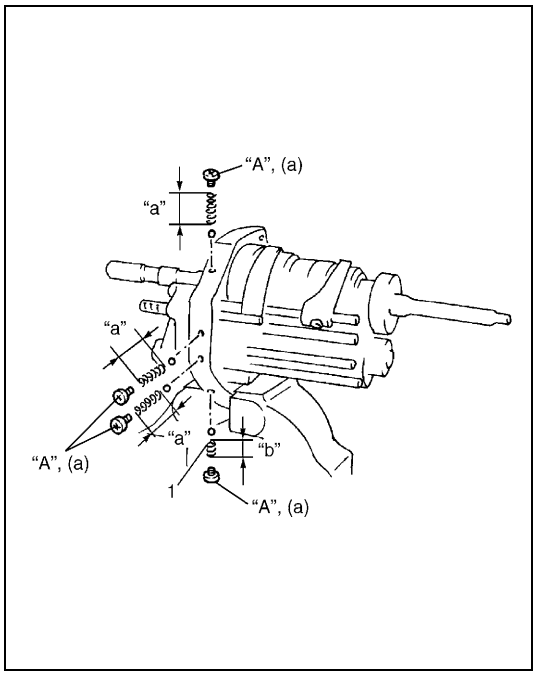

35) Install locating balls, locating springs and locating screw after checking free length of locating springs.

Free length of locating springs:

	Standard	Limit
"a"	**31.0 mm (1.22 in.)**	**30.1 mm (1.19 in.)**
"b"	**20.2 mm (0.79 in.)**	**19.6 mm (0.77 in.)**

NOTE:

For 5th gear locating spring, use shorter spring (1).

"A": Cement 99000-32020

Tightening torque
Locating spring screw
(a): 19 N·m (1.9 kg-m, 14.0 lb-ft)

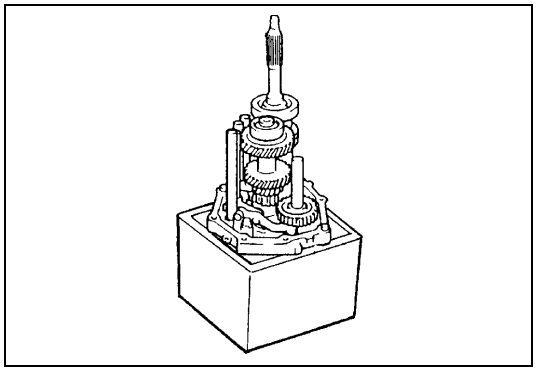

36) Place intermediate case assembly upright as shown in the figure by using workbench or the like.

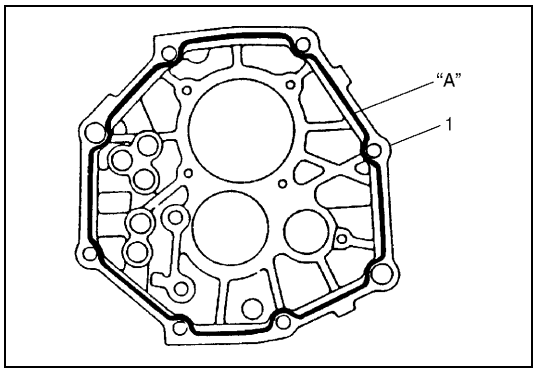

37) Apply sealant evenly to front case side of intermediate case (1) as shown.

"A": Sealant 99000-31110

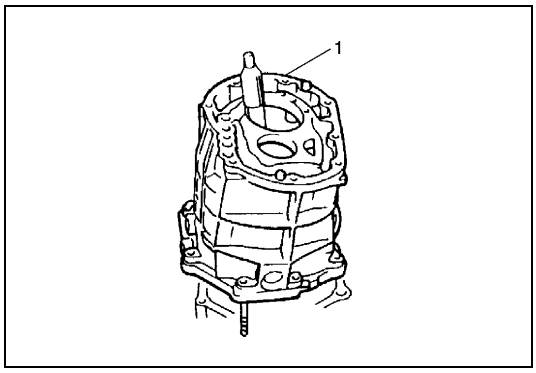

38) Clean mating surface of front case (1) and install it to intermediate case.

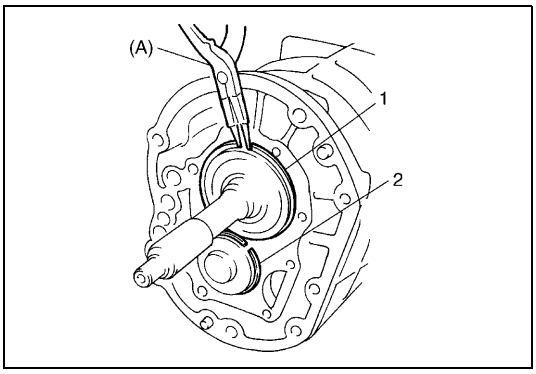

39) Fix C-rings (1, 2) to bearings as shown in the figure.

Special tool
(A): 09900-06107

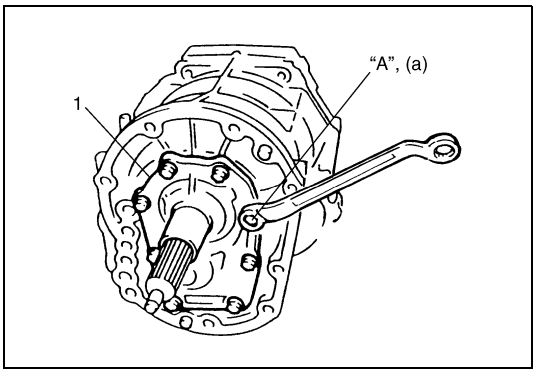

40) Apply cement "A" to input shaft bearing retainer bolt and install input shaft bearing retainer (1), new gasket and its bolts.

"A": Cement 99000-32020

Tightening torque
Input shaft bearing retainer bolt
(a): 17 N·m (1.7 kg-m, 12.5 lb-ft)

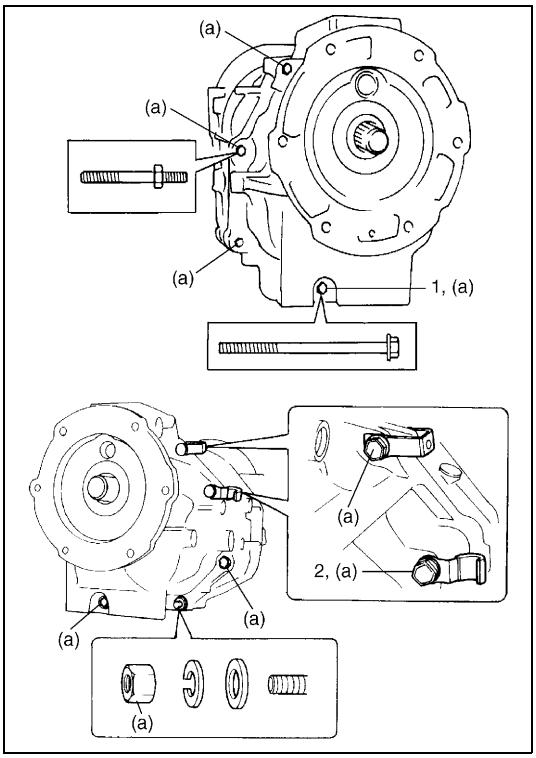

41) Clean mating surface of rear case and apply sealant evenly to rear case side of intermediate case.

Sealant: 99000-31110

42) Install rear case to intermediate case.

Tightening torque
Rear case to intermediate case bolt
(a): 35 N·m (3.5 kg-m, 25.5 lb-ft)

1.	Bolt (Longest)
2.	Bolt (Middle)

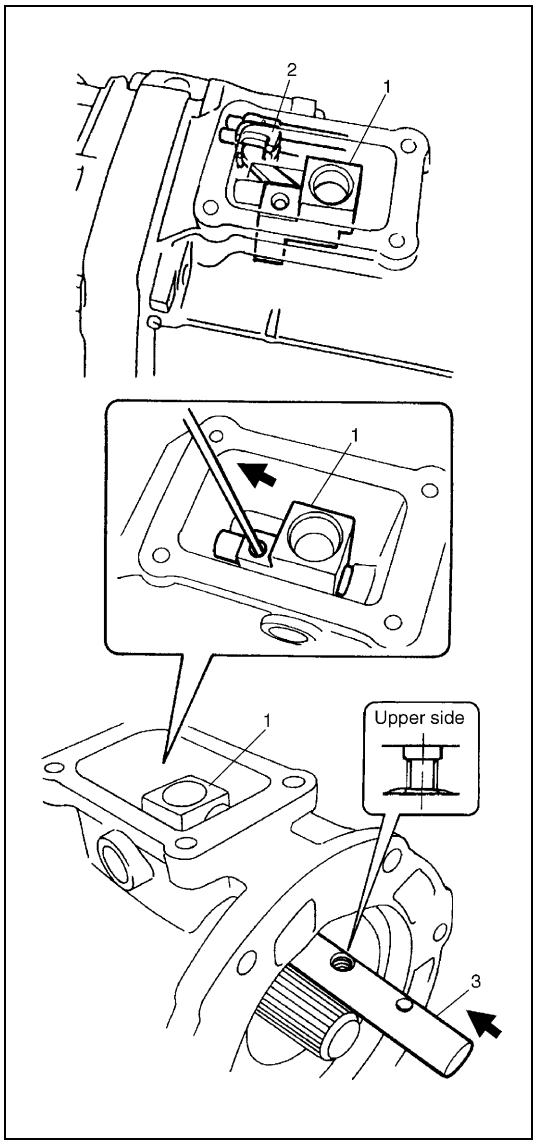

43) With tip end of gear shift shaft inner lever (1) hooked on head of gear shift shaft (2), insert gear shift inner shaft (3) into gear shift shaft inner lever.

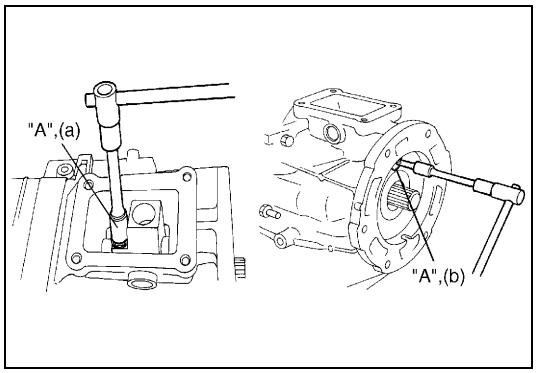

44) Apply cement “A” to inner gear shift shaft bolt/plug and tighten them to specification.

“A”: Cement: 99000-32020

Tightening torque
Gear shift shaft inner bolt
(a): 39 N·m (3.9kg-m, 28.5 lb-ft)
Gear shift shaft inner plug
(b): 19 N·m (1.9kg-m, 14.0 lb-ft)

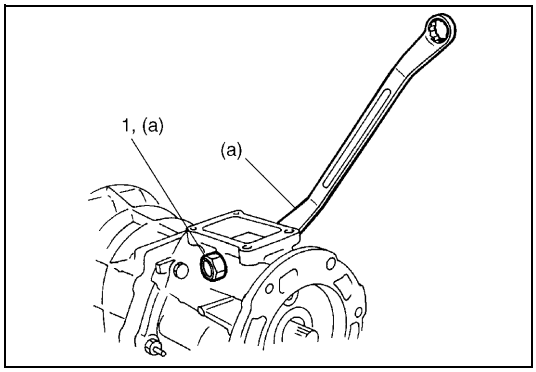

45) Tighten return spring low bolt and return spring reverse bolt (Black color) (1).

NOTE:

Install return spring reverse bolt (Black color) (1) to left side of case.

Tightening torque
Return spring reverse bolt (Black color)
(a): 28 N·m (2.8 kg-m, 20.5 lb-ft)

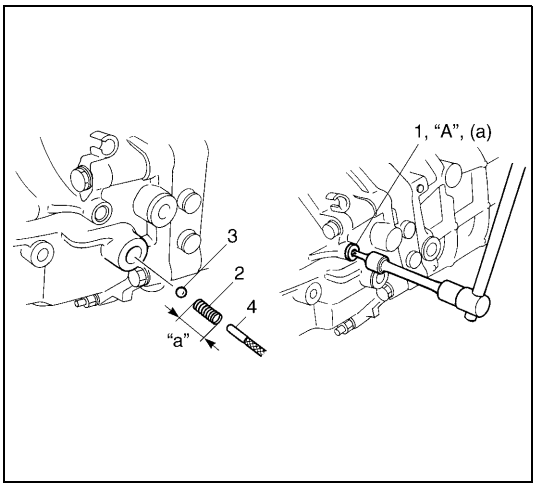

46) Apply cement “A” to locating screw (1) and install locating ball (3), locating spring (2) and screw to rear case.

Free length “a” of locating spring:
Standard: 22.1 mm (0.87 in.)
Limit: 21.4 mm (0.83 in.)

“A”: Cement 99000-32020

Tightening torque
Locating screw
(a): 19 N·m (1.9 kg-m, 14.0 lb-ft)

4. Magnet

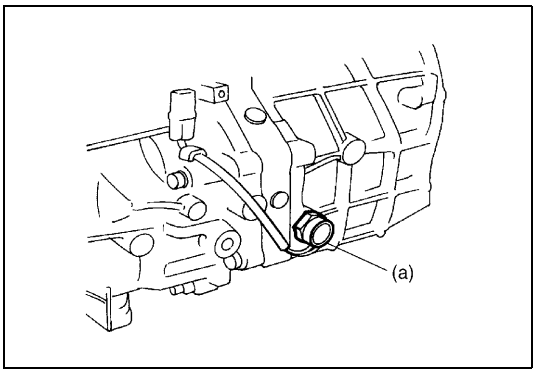

47) Install back-up light switch with new gasket.

Tightening torque
Back-up light switch
(a): 45 N·m (4.5 kg-m, 32.5 lb-ft)

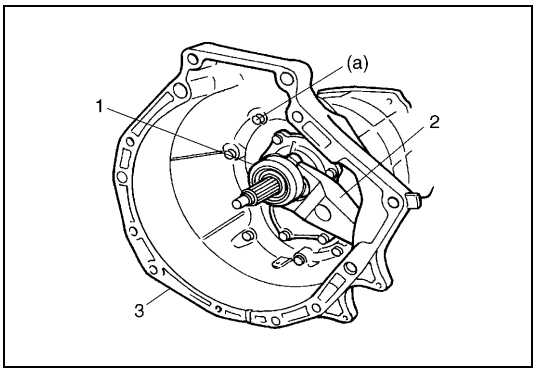

48) Install clutch housing (3) and torque its bolts to specification.

Tightening torque
Clutch housing bolt
(a): 50 N·m (5.0 kg-m, 36.5 lb-ft)

1. Release bearing
2. Release fork

Tightening Torque Specification

Fastening part	Tightening torque		
	N•m	kg-m	lb-ft
Transfer oil filler/level and drain plugs	23	2.3	17.0
Transmission oil filler/level and drain plugs	38	3.8	27.5
Back-up light switch	45	4.5	32.5
Control lever locating bolts	17	1.7	12.5
Shift lever case plate screws	6	0.6	4.5
Gear shift lever case bolts	23	2.3	17.0
Interlock cam plug	19	1.9	14.0
Main & counter shaft bearing plate screws	19	1.9	14.0
Reverse gear shaft bolt	18	1.8	13.5
Reverse link stay	19	1.9	14.0
Shift fork bolts	20	2.0	14.5
Locating spring screws	19	1.9	14.0
Input shaft bearing retainer bolt	17	1.7	12.5
Transmission case bolts	35	3.5	25.5
Inner gear shift shaft bolt	39	3.9	28.5
Inner gear shift shaft plug	19	1.9	14.0
Return spring low/reverse bolts	28	2.8	20.5
Clutch housing bolts	50	5.0	36.5
Transmission to transfer bolts	50	5.0	36.5

Required Service Material

Material	Recommended SUZUKI product (Part Number)	Use
Lithium grease	SUZUKI SUPER GREASE A (99000-25010)	• Oil seal lips • Select return system • Input shaft bearing roller • Locating rollers
Thread lock cement	THREAD LOCK CEMENT SUPER 1333B (99000-32020)	• Shift control lever locating screws • Gear shift fork bolts • Input shaft retainer bolts
Sealant	SUZUKI BOND No. 1215 (99000-31110)	• Oil drain and filler/level plugs • Mating surface of gear shift lever case • Mating surface of transmission cases • Front case plugs • Gear shift shaft plug

Special Tool

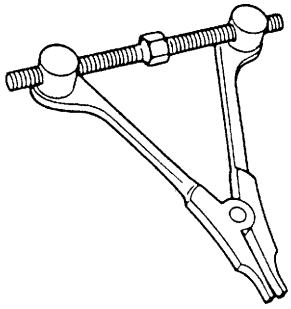 09912-34510 Case separator	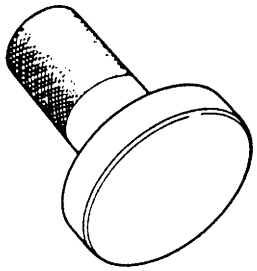 09913-75510 Bearing installer (O.D. 70.5 mm)	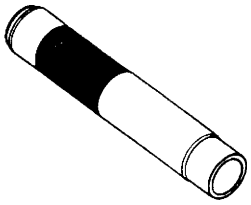 09940-51710 Bearing installer	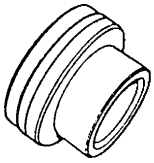 09940-54950 Bearing installer attachment
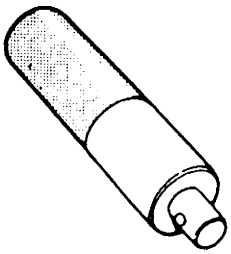 09913-75821 Installer attachment	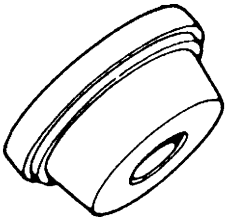 09924-84510-004 Bearing installer adapter (C)	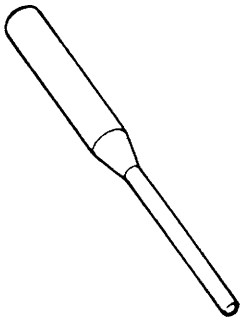 09925-78210 (6 mm) Spring pin remover	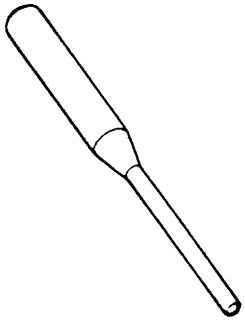 09922-85811 (4.5 mm) Spring pin remover
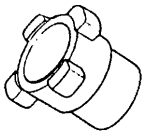 09927-08220 Shaft remover	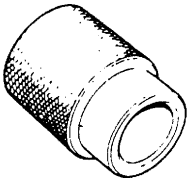 09940-53111 Bearing installer	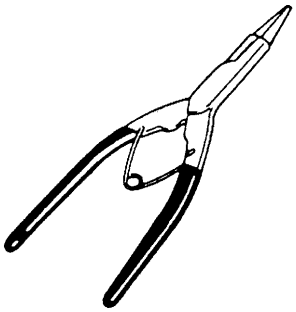 09900-06107 Snap ring pliers (opening type)	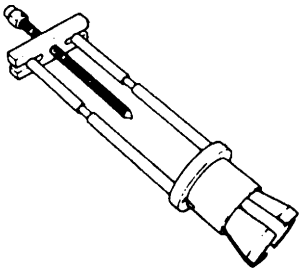 09941-84510 Bearing inner remover
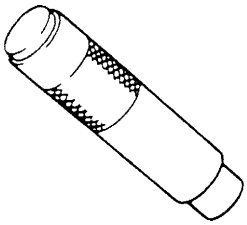 09925-18011 Installer attachment			

SECTION 7A2

MANUAL TRANSMISSION (TYPE 3)

CONTENTS

General Description

Identification of Transmission Type

Refer to Section 7A in this manual.

Transmission Components

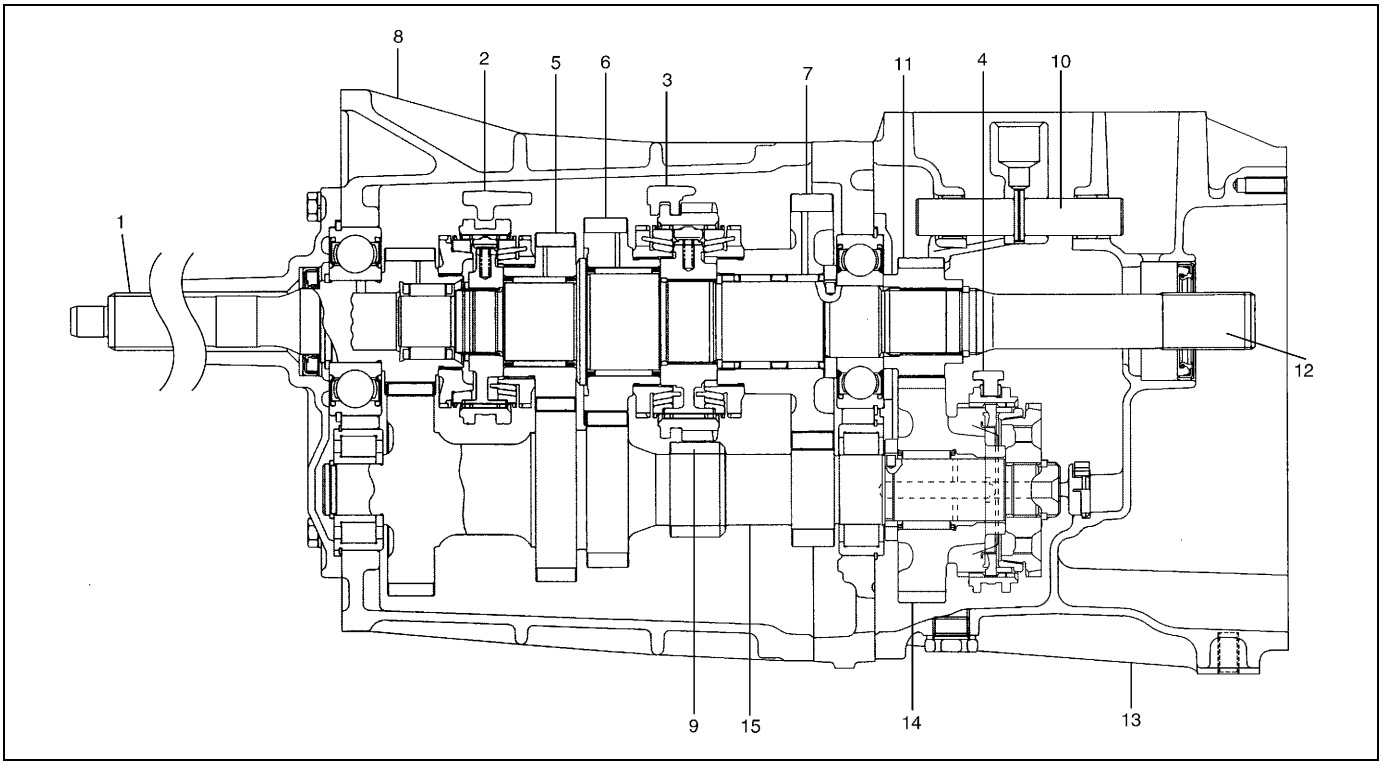

1. Input shaft	6. Main shaft 2nd gear	11. Main shaft 5th gear
2. High speed gear shift fork	7. Main shaft low gear	12. Main shaft
3. Low speed gear shift fork	8. Front case	13. Rear case
4. 5th gear shift fork	9. Low speed synchronizer sleeve (Main shaft reverse gear)	14. Countershaft 5th gear
5. Main shaft 3rd gear	10. Gear shift inner shaft	15. Countershaft

Transmission Case Components

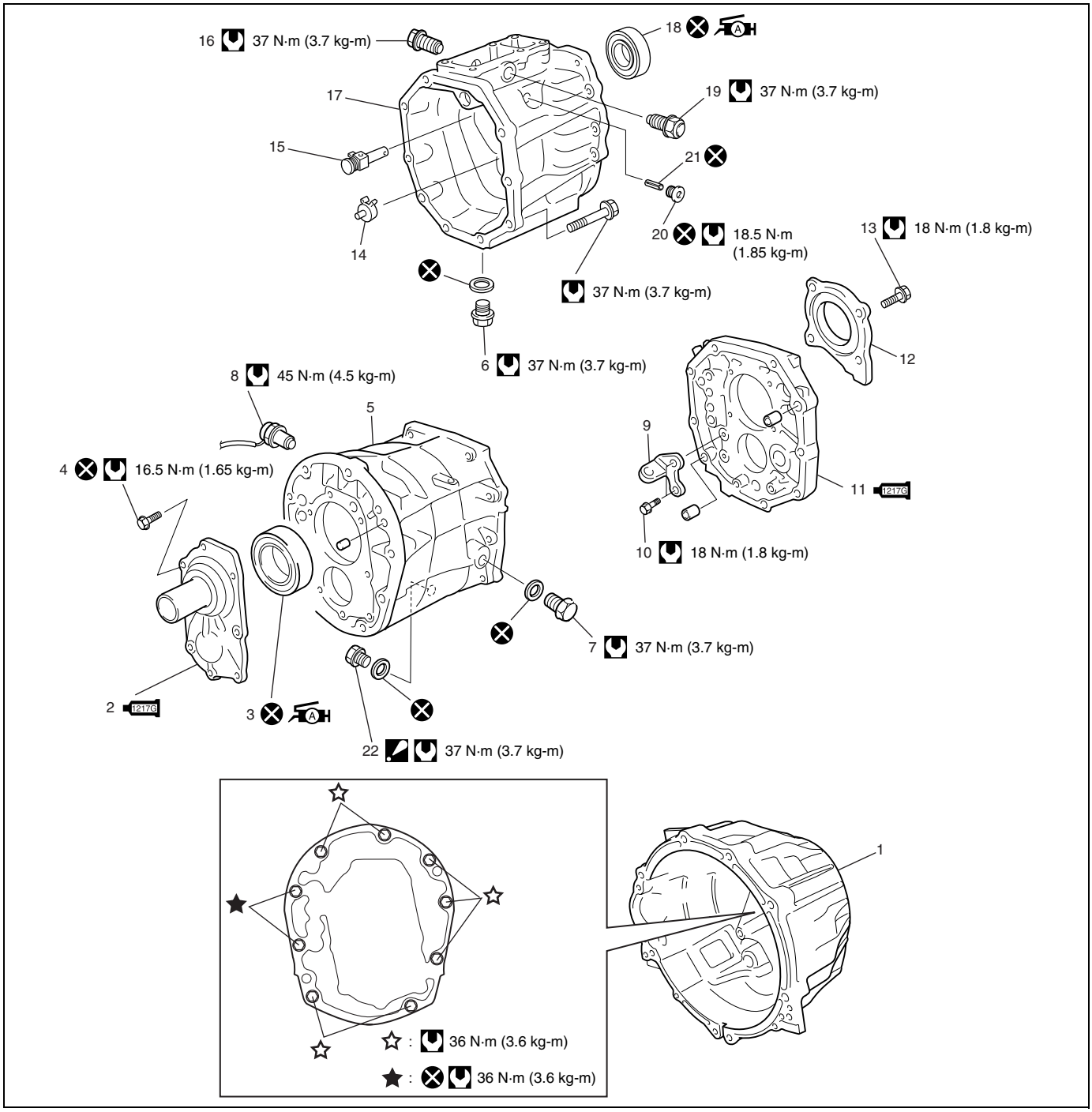

1. Clutch housing	9. Reverse gear shift arm bracket	17. Transmission rear case
2. Input shaft bearing retainer : Apply sealant 99000-31260 to mating surface to transmission front case.	10. Reverse gear shift arm bracket bolt	18. Main shaft oil seal : Apply grease 99000-25010 to oil seal lip.
3. Oil seal : Apply grease 99000-25010 to oil seal lip.	11. Transmission intermediate case : Apply sealant 99000-31260 to mating surface to transmission front and rear case.	19. Return spring reverse bolt
4. Input shaft bearing retainer bolt	12. Main and countershaft bearing retainer	20. Interlock cam plug
5. Transmission front case	13. Main and countershaft bearing retainer bolt : Apply thread lock 99000-32110 to all around thread part of bolt.	21. Interlock cam pin
6. Oil drain plug	14. Countershaft gutter	22. Plug : Do not drain transmission oil from this plug.
7. Oil filler / level plug	15. 5th-reverse interlock cam component	Tightening torque
8. Back-up light switch	16. Return spring low bolt	Do not reuse.

Input and Counter Shaft Components

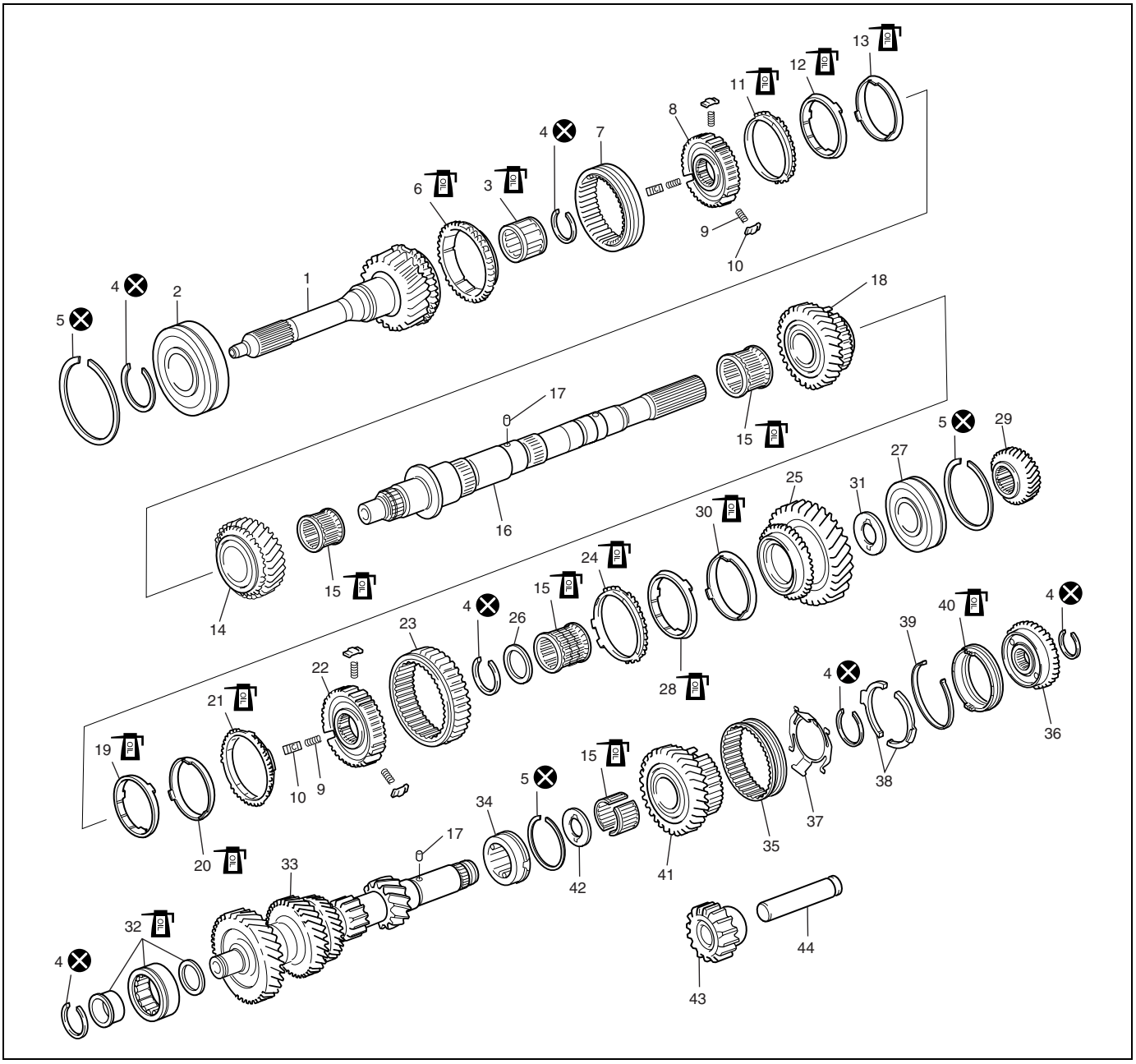

1. Input shaft	17. Pin	33. Countershaft
2. Input shaft bearing	18. 2nd gear	34. Countershaft rear bearing
3. Input shaft roller bearing	19. 2nd gear synchronizer inner ring	35. 5th & reverse synchronizer sleeve
4. Circlip	20. 2nd gear synchronizer cone ring	36. 5th & speed synchronizer dog
5. C-ring	21. 2nd gear synchronizer outer ring	37. Plate spring
6. 4th gear synchronizer ring	22. Low speed synchronizer hub	38. Balk lever
7. High speed synchronizer sleeve	23. Low speed synchronizer sleeve	39. 5th & reverse synchronizer key spring
8. High speed synchronizer hub	24. Low gear synchronizer outer ring	40. 5th & reverse synchronizer ring
9. Synchronizer spring	25. Low gear	41. Countershaft 5th gear
10. Synchronizer key	26. Spacer	42. Thrust washer
11. 3rd gear synchronizer outer ring	27. Main shaft bearing	43. Reverse idle gear
12. 3rd gear synchronizer cone ring	28. Low gear synchronizer come ring	44. Reverse idle gear shaft
13. 3rd gear synchronizer inner ring	29. 5th gear	⊗ Do not reuse.
14. 3rd gear	30. Low gear synchronizer inner ring	OIL Apply transmission oil.
15. Needle bearing	31. Low gear thrust washer	
16. Main shaft	32. Countershaft front bearing	

Gear Shifter Components

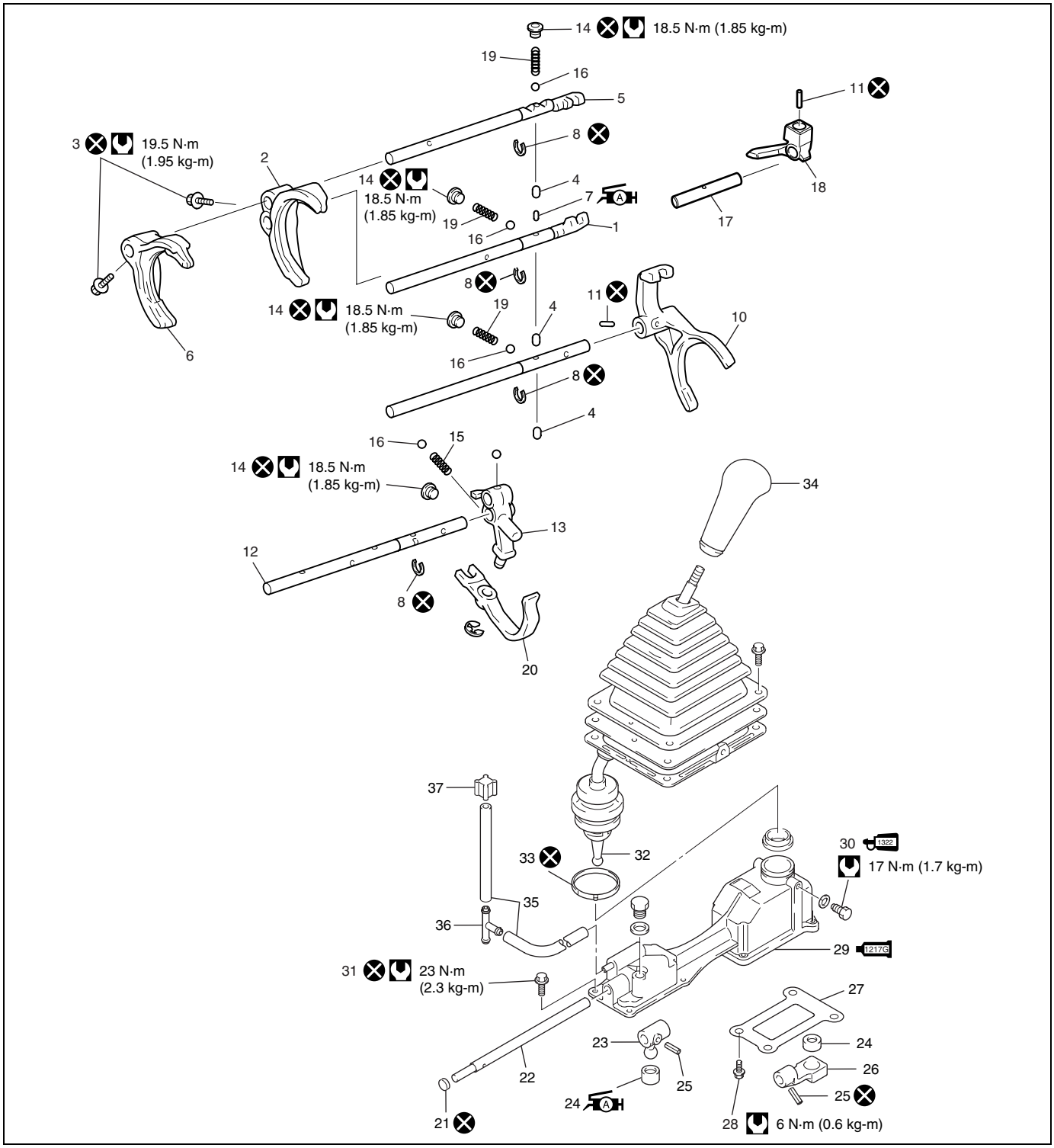

1. Low speed gear shift shaft	11. Spring pin	21. Case plug	31. Gear shift lever case bolt
2. Low speed gear shift fork	12. 5th & reverse guide shaft	22. Gear shift shaft	32. Gear shift control lever
3. High and low speed gear shift fork bolt	13. Reverse gear shift fork	23. Gear shift lever	33. Clamp
4. Interlock pin	14. Locating screw	24. Bush : Apply grease 99000-25010 to whole area of bush.	34. Gear shift control lever knob
5. High speed gear shift shaft	15. Compression spring	25. Spring pin	35. Breather hose
6. High speed gear shift fork	16. Ball	26. Gear shift arm	36. Breather hose 3way joint
7. Straight pin : Apply grease 99000-25010 to all around part of pin.	17. Gear shift inner shaft	27. Case plate	37. Breather plug
8. Circlip	18. Gear shift shaft inner lever	28. Gear shift lever case plate screw	Tightening torque
9. 5th gear shift shaft	19. Locating spring	29. Gear shift lever case : Apply sealant 99000-31260 to mating surface to gear shift lever case	Do not reuse.
10. 5th gear shift fork	20. Reverse gear shaft arm	30. Control lever locating bolt : Apply thread lock 99000-32110 to all around thread part of bolt.	

Unit Disassembly

Gear Shift Lever Case

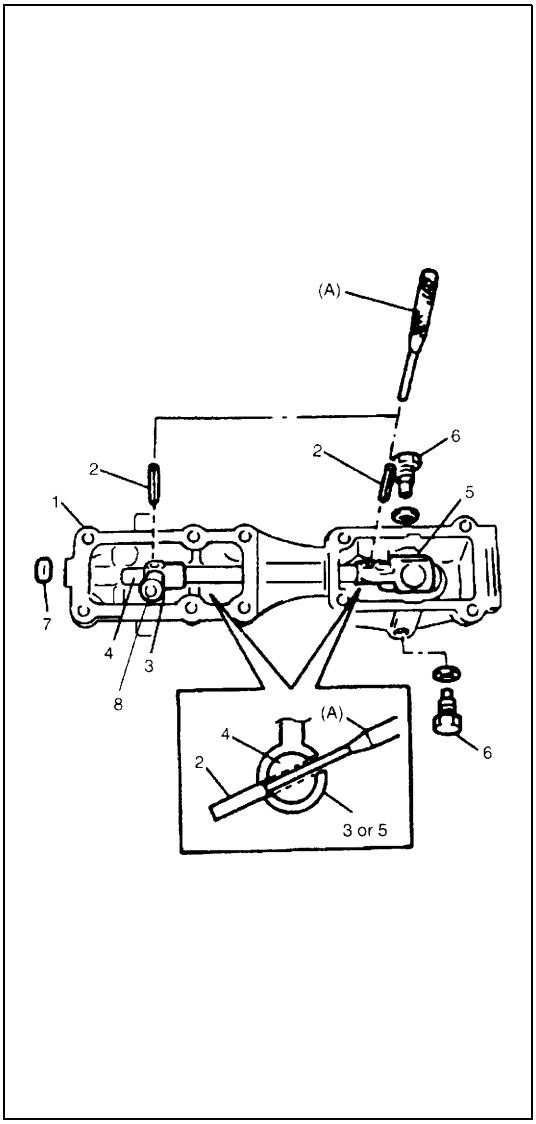

1) Remove case plate.
2) With case supported with soft jawed vise, remove lever locating bolts (6).

NOTE:

Use aluminum plates between vise and case to protect case against damage.

3) Using special tool, drive spring pin (2) into gear shift arm (5) as far as the position shown in the figure.

CAUTION:

When driving spring pin (2), use care not to damage gear shift lever case (1).

Special tool
(A): 09922-85811

4) Likewise, drive spring pin (2) into gear shift lever (3) as far as the position shown in the figure.

CAUTION:

When driving spring pin (2), use care not to damage gear shift lever case (1).

Special tool
(A): 09922-85811

5) Remove case plug (7).
6) Pull out gear shift shaft (4) from gear shift lever case (1) and take out gear shift lever (3).
7) Remove gear shift lever bush (8).

Transmission Unit

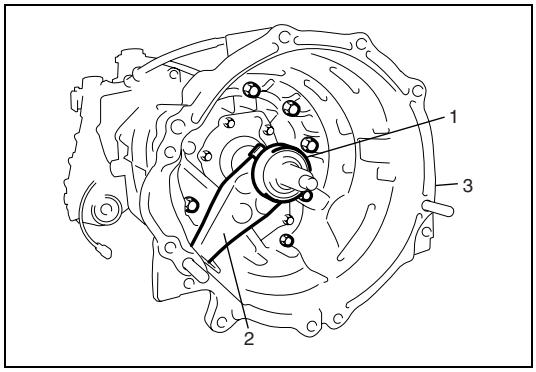

1) Remove clutch release bearing (1), release fork (2) and clutch housing (3).

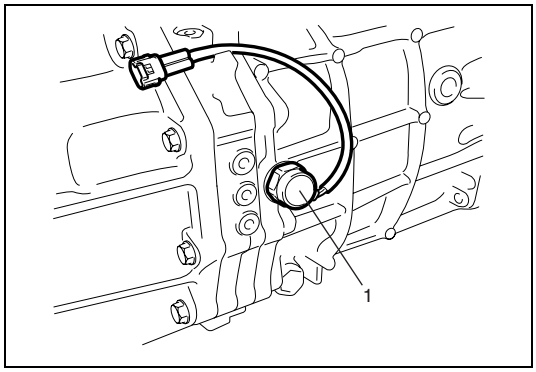

2) Remove back-up light switch (1).

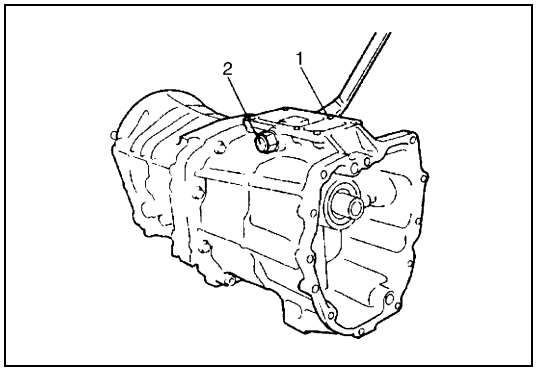

3) Remove return spring low bolt (1) and return spring reverse bolt (2).

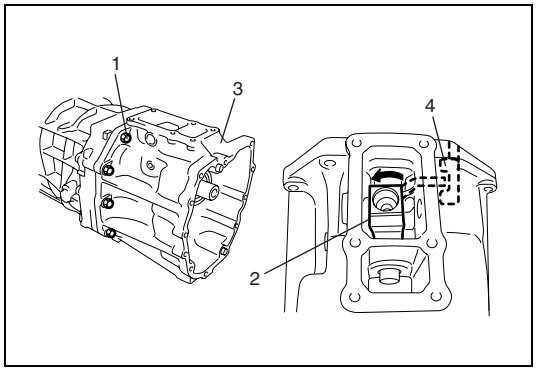

4) Remove transmission to transfer bolt (1).
5) Disconnect gear shift inner lever edge (2) from gear shift shaft (4), and remove rear case (3) tapping transmission rear case's end by plastic hammer.

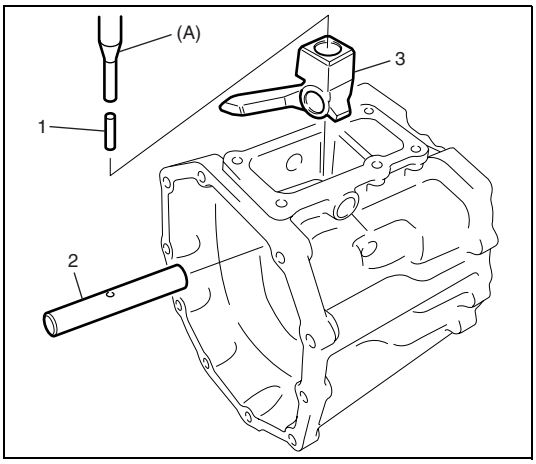

6) Drive spring pin (1) out by using special tool, and then remove gear shift inner shaft (2) and gear shift inner lever (3) from rear case.

Special tool
(A): 09922-85811

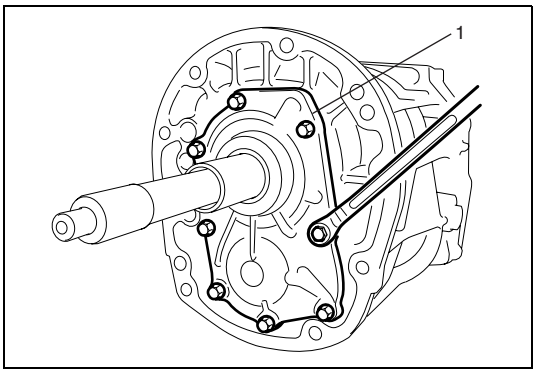

7) Remove input shaft bearing retainer (1).

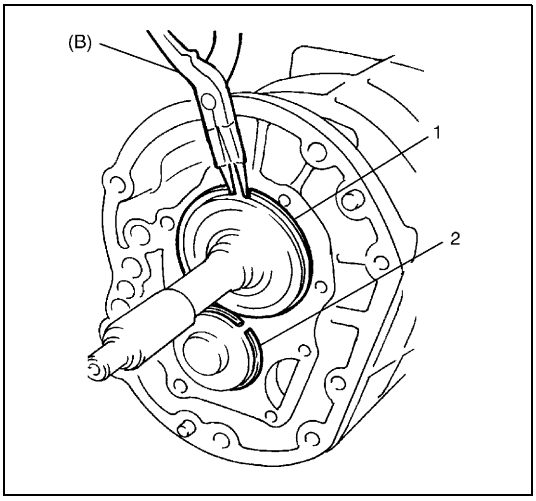

8) Remove C-ring (1) of input shaft bearing and C-ring (2) of counter shaft front bearing.

Special tool
(B): 09900-06107

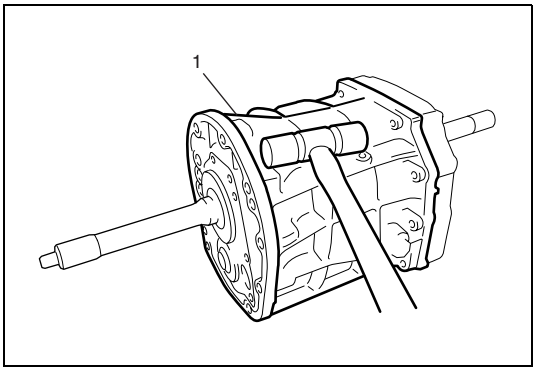

9) Tapping transmission front case (1) flanges with plastic hammer, remove transmission front case.

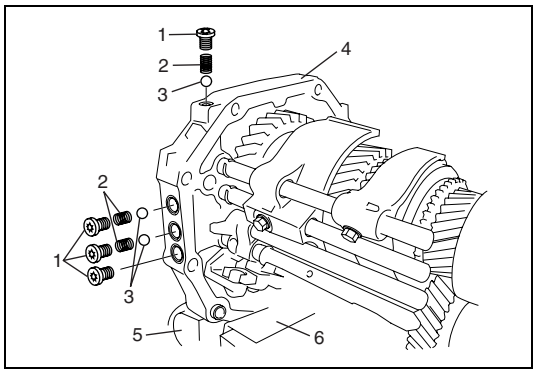

10) Set transmission intermediate case (4) on vise (5) securely.

NOTE:

Use aluminum plates (6) between vise (5) and intermediate case (4) to protect intermediate case (4) against damage.

11) Remove locating screws (1), locating springs (2) and locating ball (3) as shown in the figure.

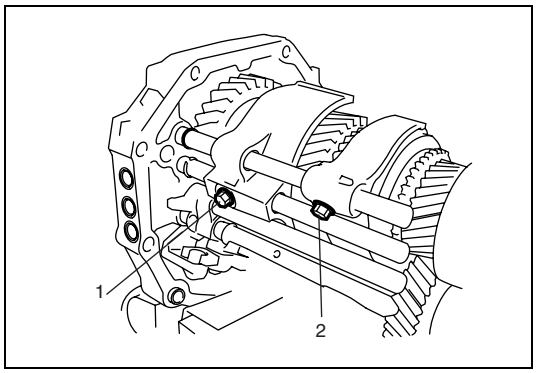

12) Remove low speed gear shift fork bolt (1) and high speed gear shift fork bolt (2).

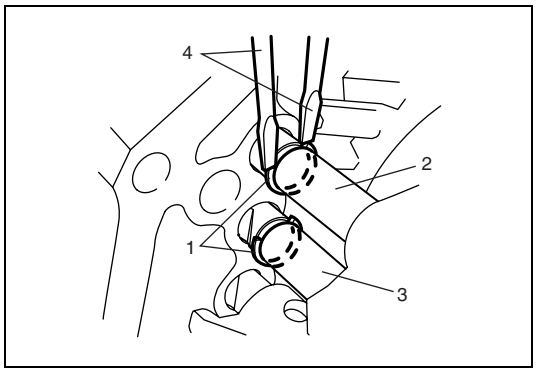

13) Remove circlips (1) from high speed gear shift shaft (2) and low gear shift shaft (3) using flat head screw drivers (4) or the like.

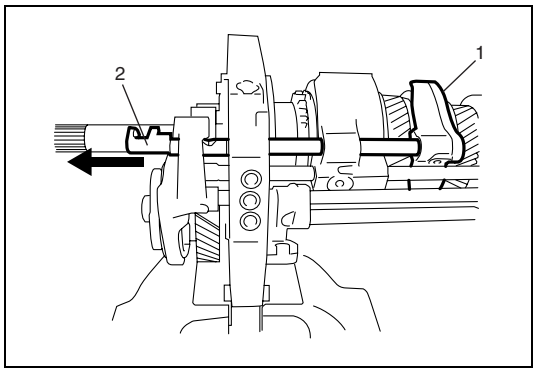

14) Remove high speed gear shift shaft (2) and high speed gear shift fork (1).

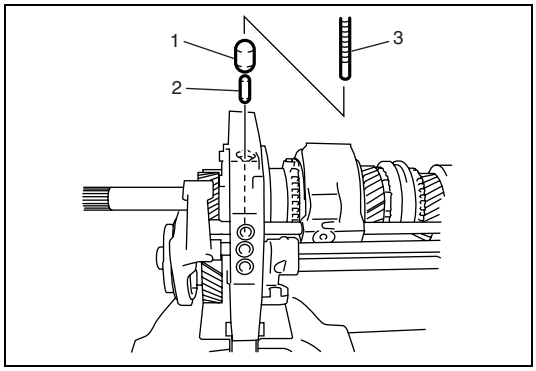

15) Remove interlock pin (1) and straight pin (2) using magnet (3).

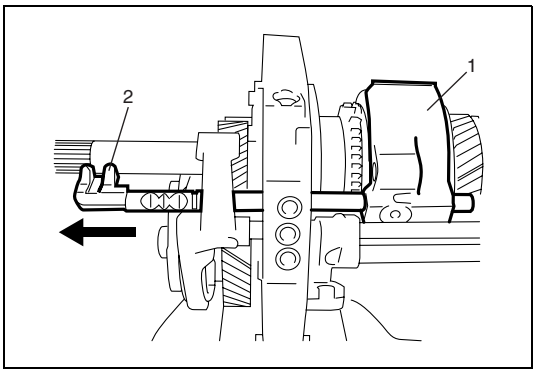

16) Remove low speed gear shift shaft (2) and low speed gear shift fork (1).

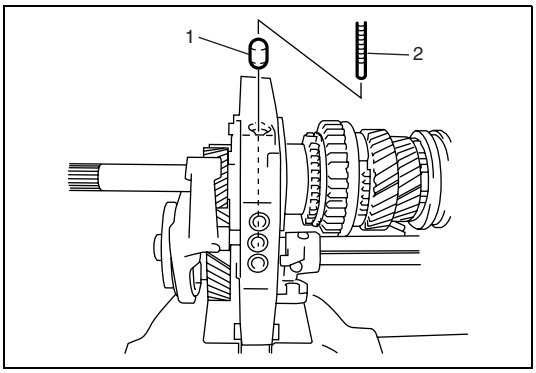

17) Remove interlock pin (1) by using magnet (2).

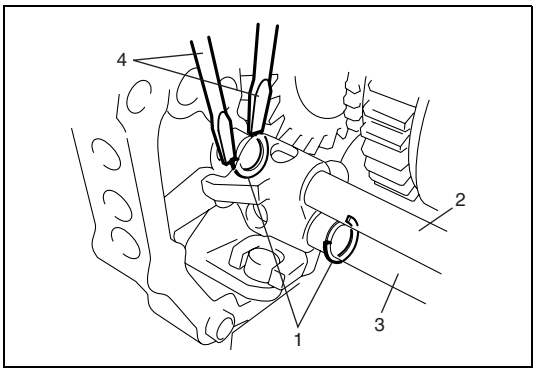

18) Remove circlips (1) from 5th gear shift shaft (2) and 5th & reverse guide shaft (3) using flat head screw drivers (4) or the like.

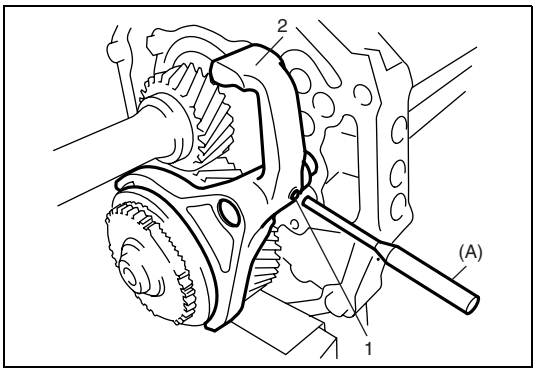

19) Drive spring pin (1) out from 5th gear shift fork (2) using special tool.

Special tool
(A): 09922-85811

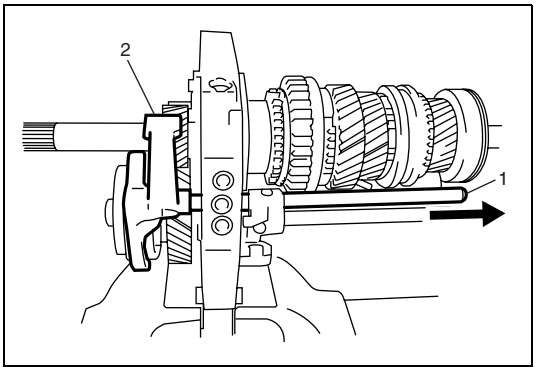

20) Remove 5th gear shift shaft (1) and 5th gear shift fork (2).

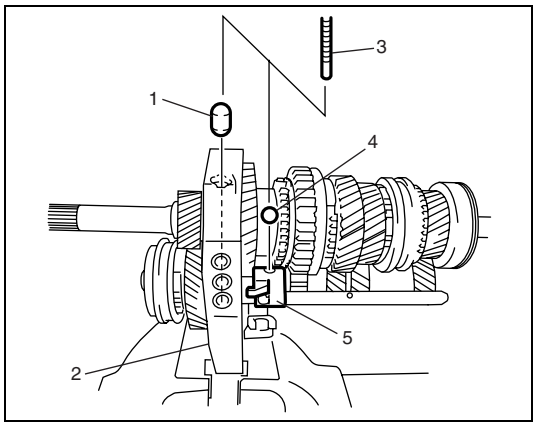

21) Remove interlock pin (1) from intermediate case (2) using magnet (3).
22) Remove ball (4) from reverse shift fork (5) using magnet (3).

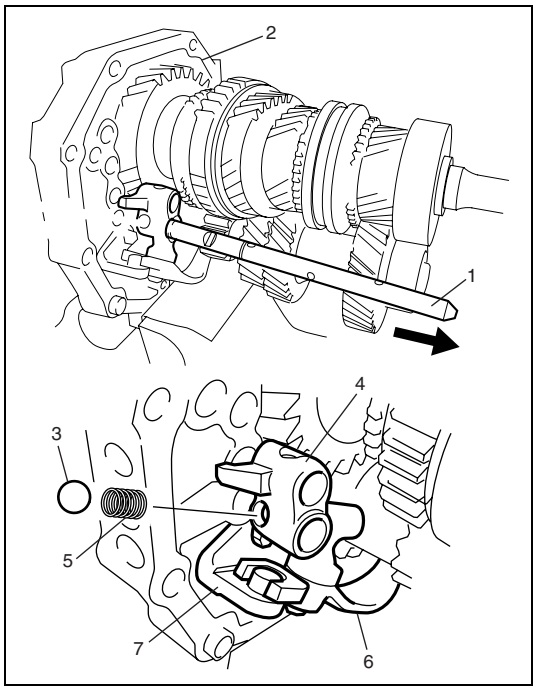

23) Pull out 5th & reverse guide shaft (1) from intermediate case (2).

NOTE:

When pulling 5th & reverse guide shaft (1), place hand so as to catch ball (3) jumping out of reverse gear shift fork (4).

24) Remove compression spring (5) from reverse gear shift fork (4) using magnet.
25) Remove reverse gear shift fork (4) with reverse gear shift arm (6) from reverse gear shift arm bracket (7).

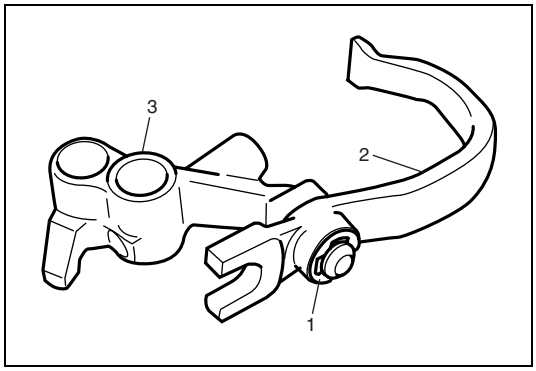

26) Remove circlip (1), and then remove reverse gear shift arm (2) from reverse gear shift fork (3).

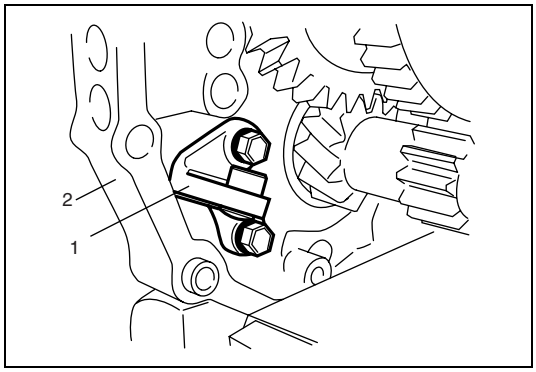

27) Remove reverse gear shift arm bracket (1) from intermediate case (2).

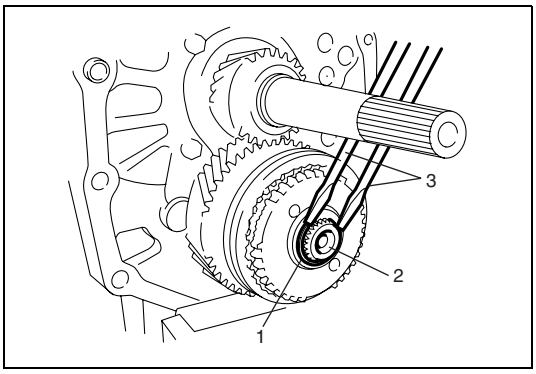

28) Remove circlip (1) from counter shaft (2) using flat head screw drivers (3) or the like.

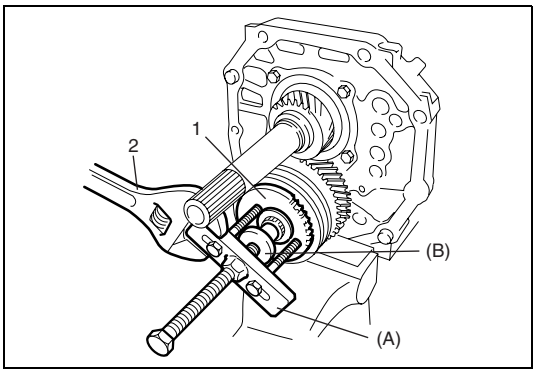

29) Remove 5th speed synchronizer dog (1) using special tools and adjustable angle wrench (2).

Special tool
(A): 09944-36011
(B): 09913-85230

30) Remove 5th & reverse synchronizer ring.

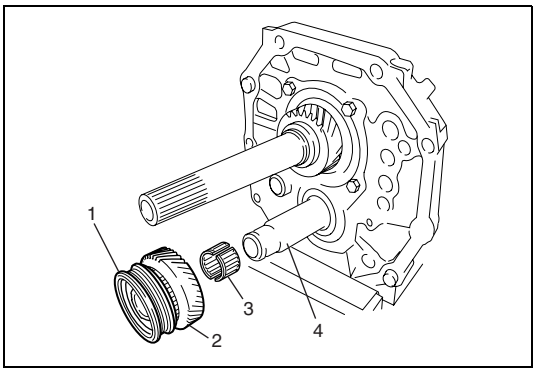

31) Pull off 5th & reverse synchronizer sleeve (1), counter shaft 5th gear assembly (2) and needle bearing (3) together from counter shaft (4).

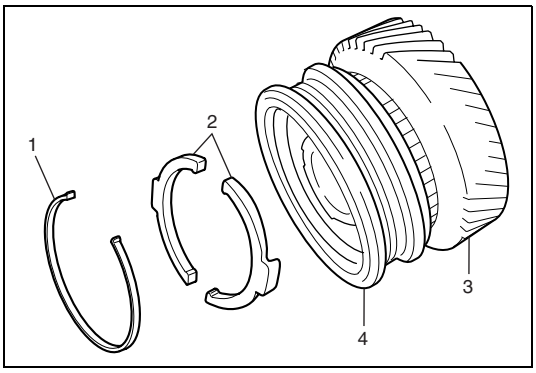

32) Remove synchronizer key spring (1) and balk levers (2) from counter shaft 5th gear (3).
33) Remove 5th & reverse synchronizer sleeve (4) from counter shaft 5th gear (3).

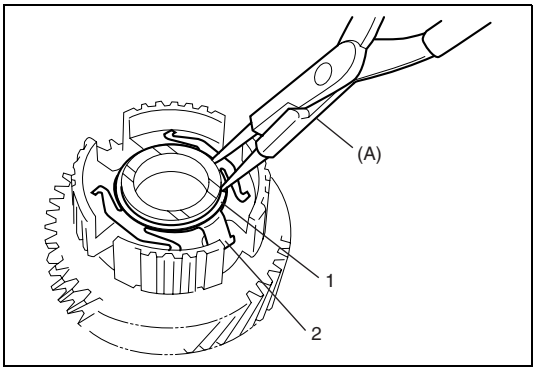

34) Remove circlip (1) using special tool, and then remove plate spring (2).

Special tool
(A): 09900-06107

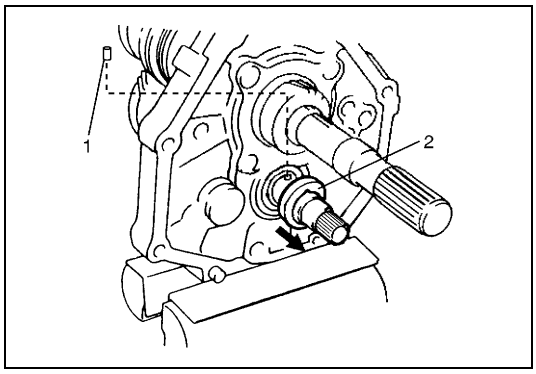

35) Remove thrust washer (2) and pin (1).

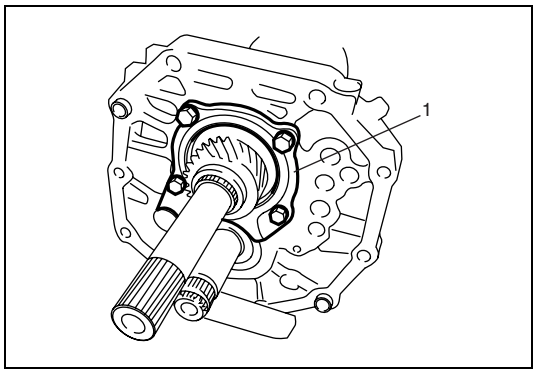

36) Remove main and counter shaft bearing retainer (1).

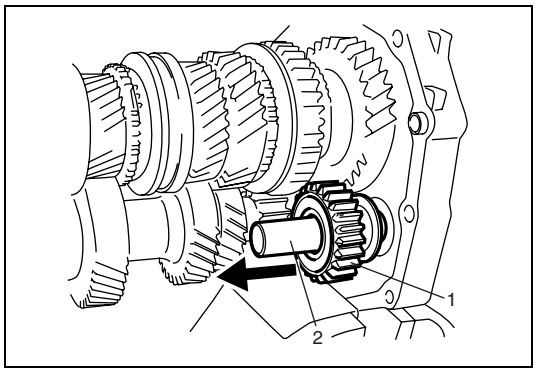

37) Remove reverse idle gear (1) and shaft (2).

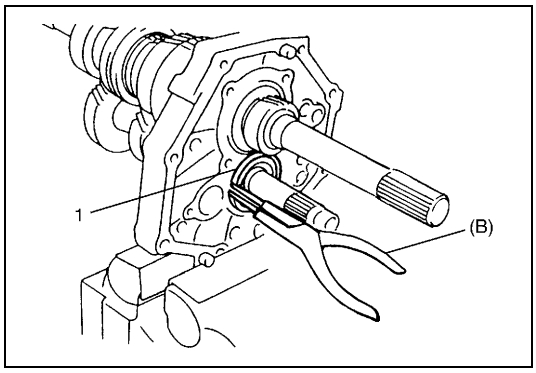

38) Remove C-ring (1) of counter shaft rear bearing using special tool.

Special tool
(B): 09900-06107

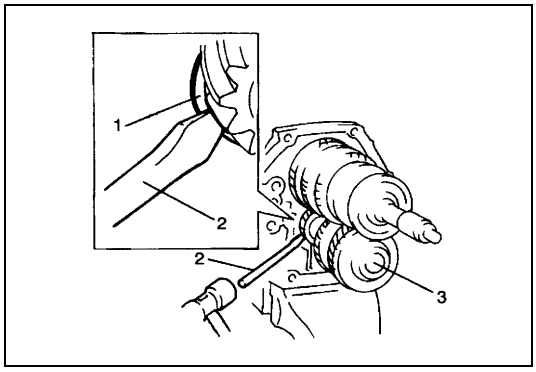

39) Remove counter shaft rear bearing from intermediate case using rod (2) and hammer, and then remove counter shaft (3).

NOTE:

This removal requires 2 persons. One should hold counter shaft (3) and the other should remove bearing (1) using rod (2) and hammer.

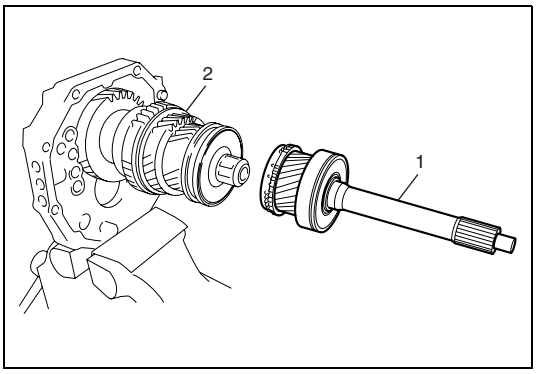

40) Remove input shaft assembly (1) with 4th gear synchronizer ring from main shaft assembly (2).

NOTE:

When removing input shaft, be careful not to drop roller bearing.

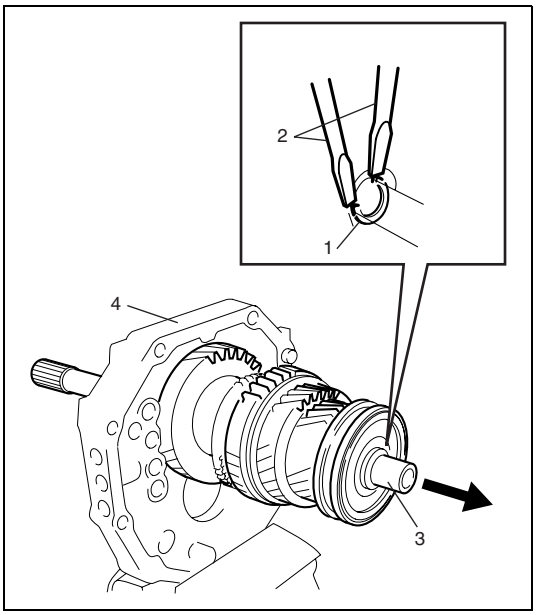

41) Remove C-ring (1) of main shaft bearing using flat head screwdrivers (2) or the like and pull out main shaft assembly (3).

NOTE:

If intermediate case (4) is engaged with bearing firmly, tap front face of intermediate case (4) with plastic hammer lightly as it will cause main shaft assembly (3) to come off forward.

Sub-Assembly

Input shaft assembly

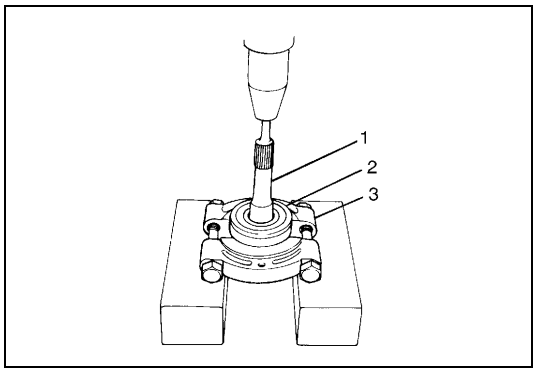

Remove circlip of input shaft (1) and pull out bearing (2) with puller (3) and press.

CAUTION:
Sealed bearing must not be washed. Replace it with new one when required.

Main shaft assembly

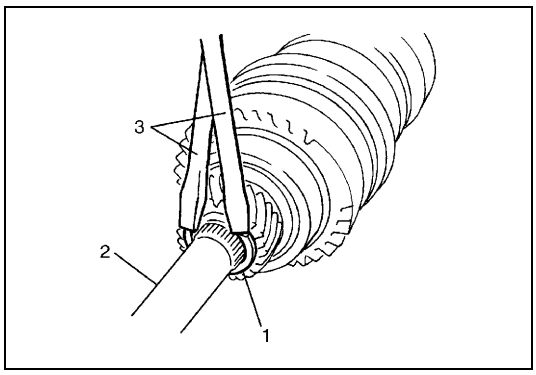

1) Remove circlip (1) from main shaft (2) using flat head screw drivers (3) or the like.

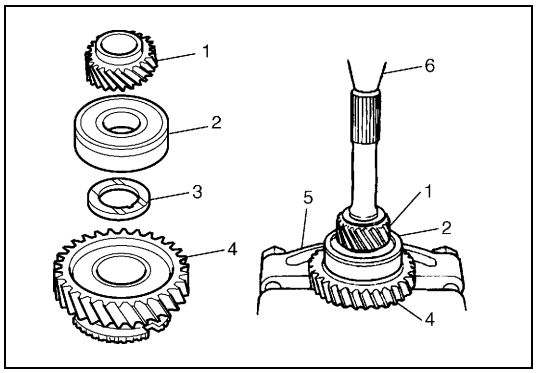

2) Pull out 5th gear (1), main shaft bearing (2), low gear thrust washer (3) and low gear (4) with puller (5) and press (6).

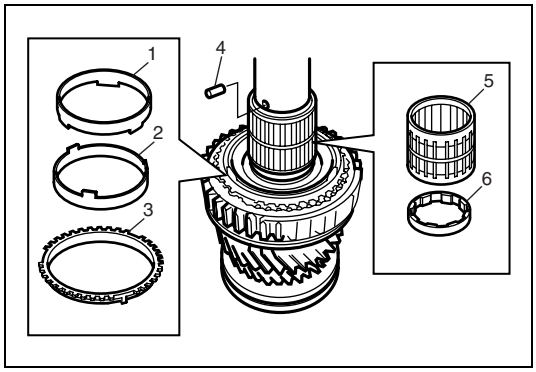

3) Remove low gear synchronizer inner ring (1), synchronizer cone ring (2), synchronizer outer ring (3), pin (4), needle bearing (5) and spacer (6).

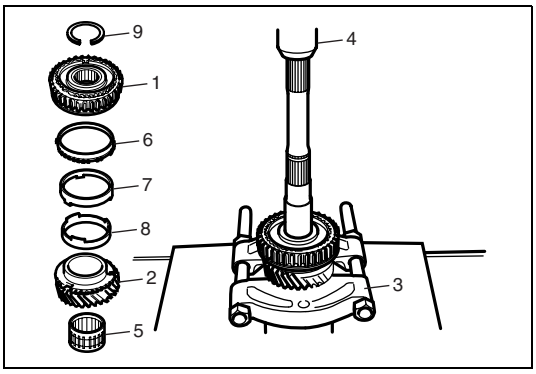

4) Remove circlip (9) and pull out 2nd gear (2), needle bearing (5), 2nd gear synchronizer outer ring (6), cone ring (7), inner ring (8) and low speed synchronizer sleeve/hub assembly (1) together using puller (3) and press (4).

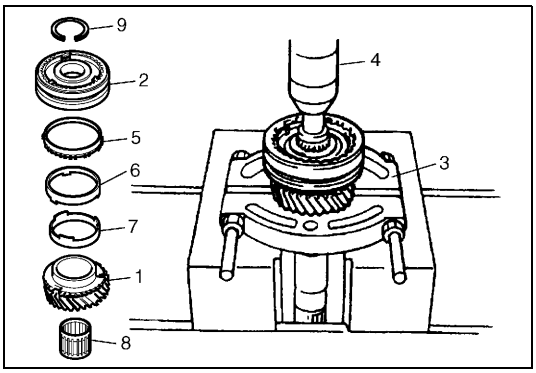

5) Remove circlip (9) from front part of main shaft and pull out 3rd gear (1), needle bearing (8), 3rd gear synchronizer outer ring (5), cone ring (6), inner ring (7) and high speed synchronizer sleeve/hub assembly (2) together using puller (3) and press (4).

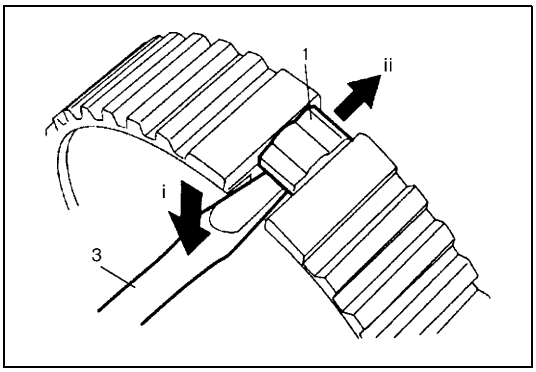

6) Remove high speed synchronizer sleeve from high speed synchronizer hub (2).
7) Remove keys (1) and springs from high speed synchronizer hub (2) using flat head screwdriver (3) or the like as shown in the figure.
8) Remove low speed synchronizer sleeve/hub in similar manner as steps 6) and 7).

Counter shaft & Reverse idle gear

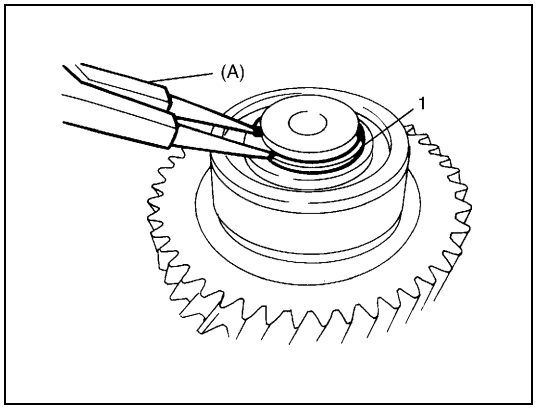

1) Remove circlip (1) from counter shaft.

Special tool
(A): 09900-06107

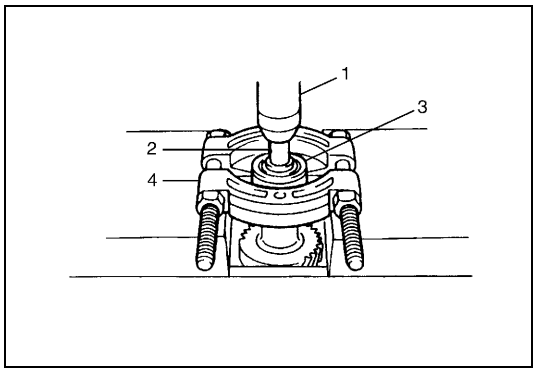

2) Pull out counter shaft front bearing (3) from counter shaft by using puller (4), press (1) and rod (diameter approx. 22 mm (0.87 in.)) (2).

Input shaft bearing retainer and oil seal

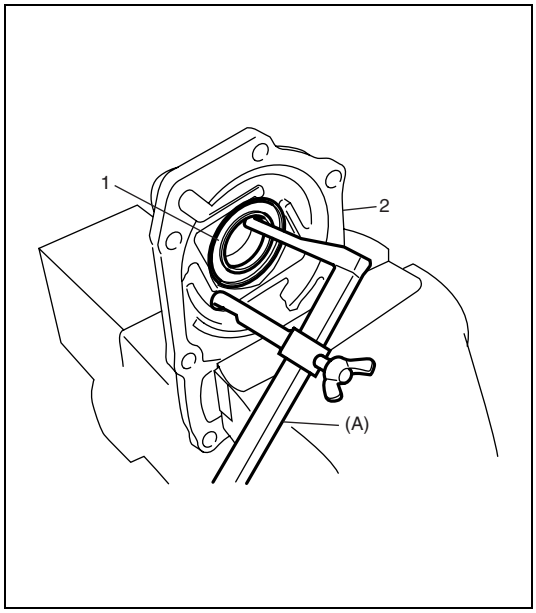

1) Set bearing retainer (2) on vise (3) securely.

NOTE:
Use aluminum plates (4) between vise (3) and bearing retainer (2) to protect bearing retainer (2) against damage.

2) Remove oil seal (1) from bearing retainer (2) using special tool if necessary.

NOTE:
Unless oil seal is leaky or its lip is excessively hardened, replacement is not necessary.

Special tool
(A): 09913-50121

Transmission rear case

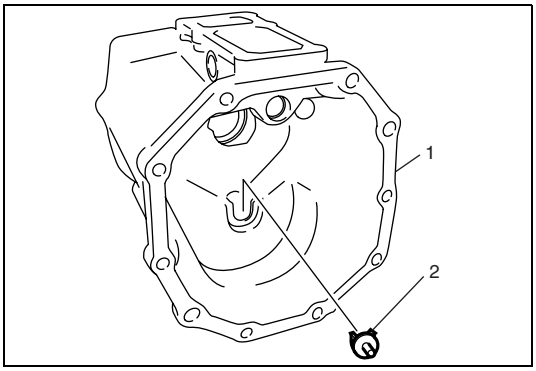

1) Remove counter shaft gutter (2) from transmission rear case (1).

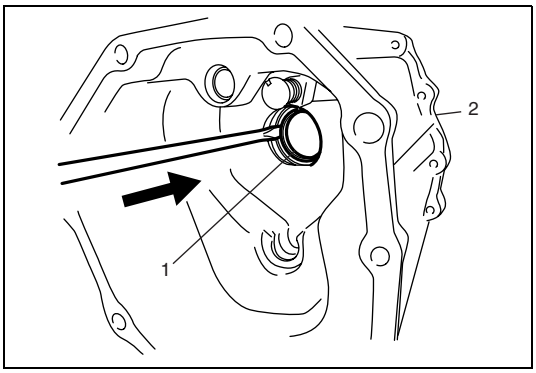

2) Take out oil seal (1) from rear case (2).

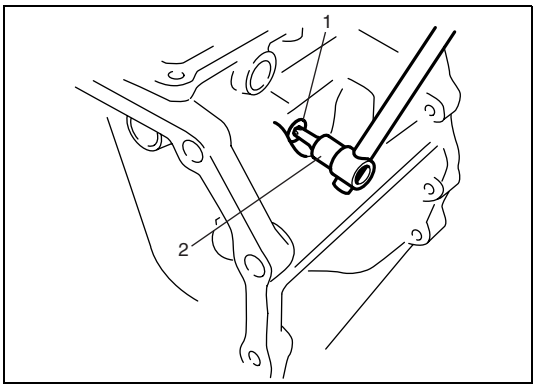

3) Remove interlock cam plug (1) by using torx® (2).

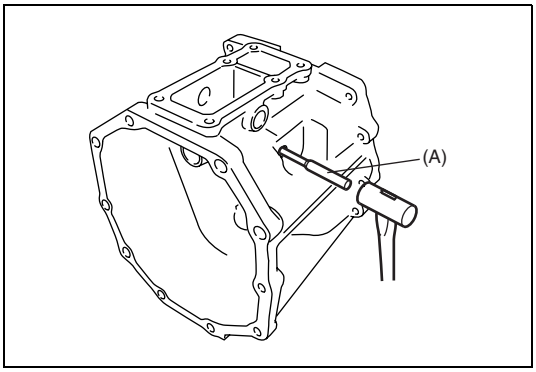

4) Remove interlock cam pin using special tool.

Special tool
(A): 09922-85811

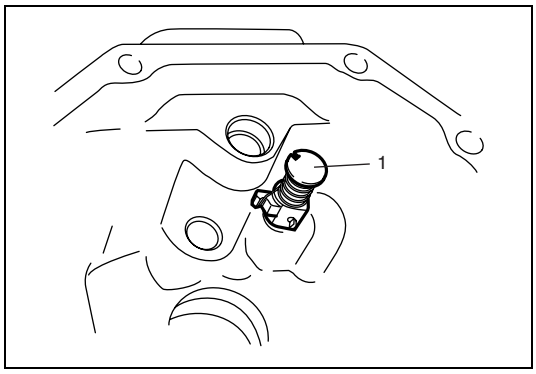

5) Pull out interlock cam component (1).

Components Inspection

Sub-Assembly

Input Shaft Assembly

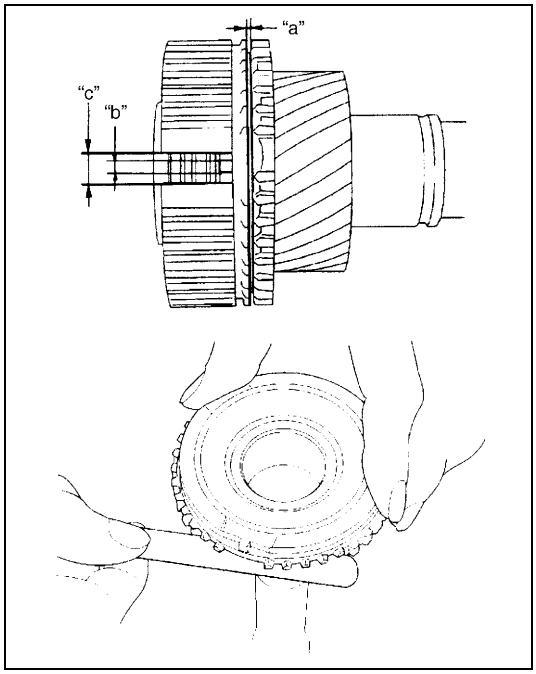

Check clearance "a" between synchronizer ring and gear, width of index protrusion "b" in synchronizer ring, key slot width "c" in high speed synchronizer hub and each chamfered tooth of gear and synchronizer ring and replace with new one, if necessary. Also, check gear tooth.

Clearance "a" between synchronizer ring and gear (input shaft)
Standard: 0.7 – 1.7 mm (0.028 – 0.067 in.)
Service limit: 0.5 mm (0.020 in.)
Width of index protrusion "b" (input shaft)
Standard: 3.9 – 4.1 mm (0.154 – 0.161 in.)
Service limit: 3.6 mm (0.142 in.)
Key slot width "c" (high speed synchronizer hub)
Standard: 8.0 – 8.1 mm (0.315 – 0.319 in.)

Main shaft assembly

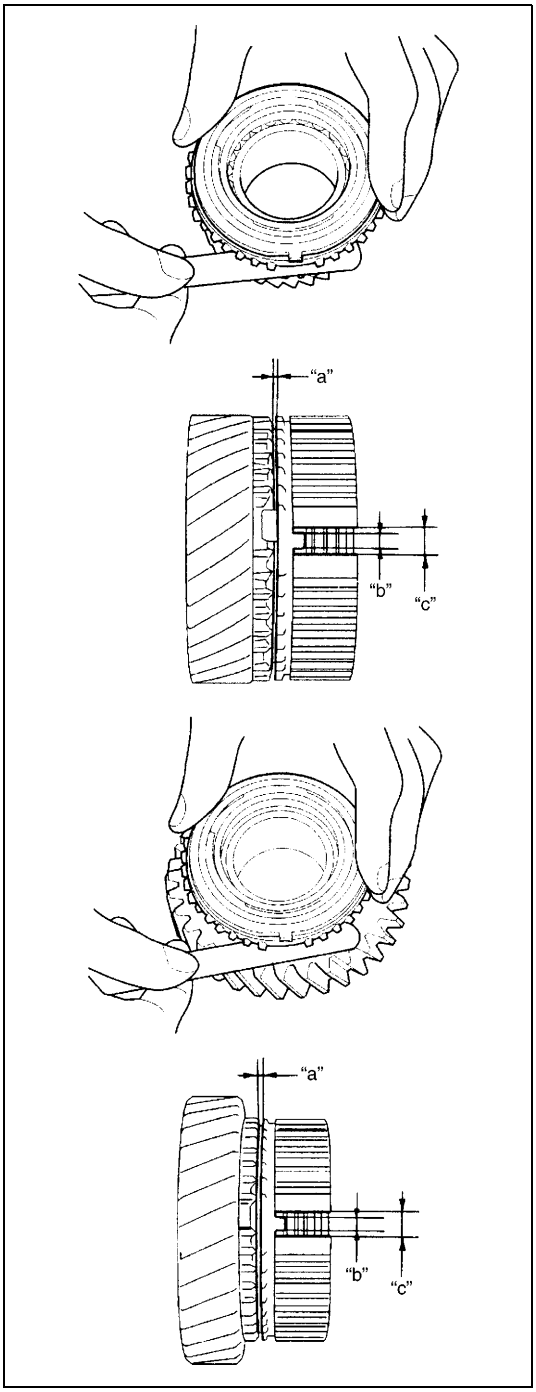

Check clearance "a" between synchronizer ring and gear, width of index protrusion "b" in synchronizer ring, key slot width "c" in high and low speed synchronizer hub and each chamfered tooth of gear and synchronizer ring and replace with new one, if necessary. Also, check gear tooth.

Clearance "a" between synchronizer ring and gear (Main shaft):
1st:
Standard: 0.65 – 1.75 mm (0.026 – 0.069 in.)
Service limit: 0.5 mm (0.020 in.)
2nd:
Standard: 0.65 – 1.75 mm (0.026 – 0.069 in.)
Service limit: 0.5 mm (0.020 in.)
3rd:
Standard: 0.65 – 1.75 mm (0.026 – 0.069 in.)
Service limit: 0.5 mm (0.020 in.)

Width of index protrusion "b" (Main shaft):
1st:
Standard: 4.8 – 5.0 mm (0.189 – 0.197 in.)
Service limit: 4.5 mm (0.177 in.)
2nd:
Standard: 5.7 – 5.9 mm (0.224 – 0.232 in.)
Service limit: 5.4 mm (0.213 in.)
3rd:
Standard: 4.3 – 4.5 mm (0.169 – 0.1777 in.)
Service limit: 4.0 mm (0.157 in.)

Key slot width "c" (High and low speed synchronizer hub):
1st:
Standard: 9.0 – 9.1 mm (0.354 – 0.358 in.)
2nd:
Standard: 9.0 – 9.1 mm (0.354 – 0.358 in.)
3rd:
Standard: 8.0 – 8.1 mm (0.315 – 0.319 in.)

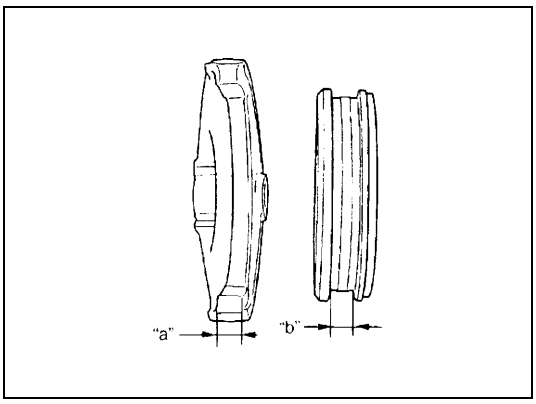

- Measure width of high speed gear shift fork end "a" and groove width of high speed synchronizer sleeve "b" and then calculate clearance "c" as follows:

Clearance "c" = "b" – "a"

If clearance exceeds limit, replace fork and sleeve.

Clearance "c" between fork and sleeve
Standard: 0.15 – 0.35 mm (0.006 – 0.014 in.)
Limit: 1.0 mm (0.039 in.)

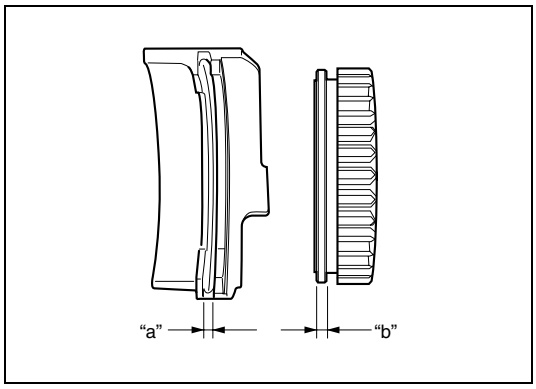

- Measure groove "a" of low speed gear shift fork and flange width "b" of low speed synchronizer sleeve and then calculate clearance "c" as follows:

Clearance "c" = "a" – "b"

If clearance exceeds limit, replace fork and sleeve.

Clearance "c" between fork and sleeve:
Standard: 0.15 – 0.41 mm (0.006 – 0.016 in.)
Limit: 1.0 mm (0.039 in.)

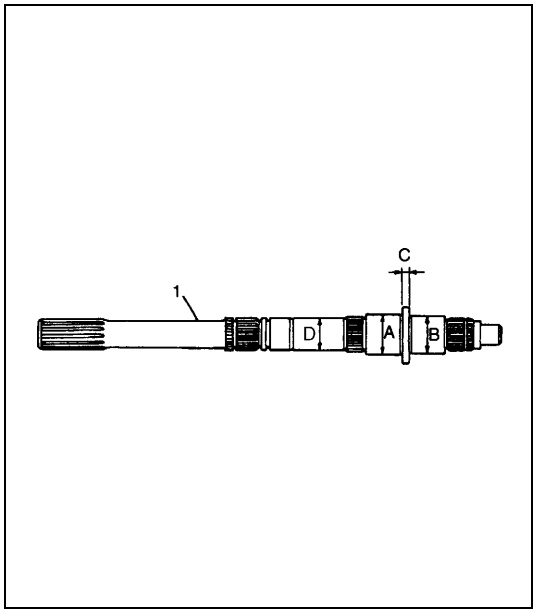

- Check diameter of main shaft (1) and thickness of main shaft (1) flanges as shown in the figure. If measured value is out of specification, replace main shaft (1).

Main shaft specification (diameter and thickness):

Measuring portion	Standard
A	**46.984 – 47.000 mm (1.8500 – 1.8504 in.)**
B	**37.984 – 38.000 mm (1.4954 – 1.4961 in.)**
C	**4.80 – 5.20 mm (0.1890 – 0.2047 in.)**
D	**38.979 – 38.995 mm (1.5346 – 1.5352 in.)**

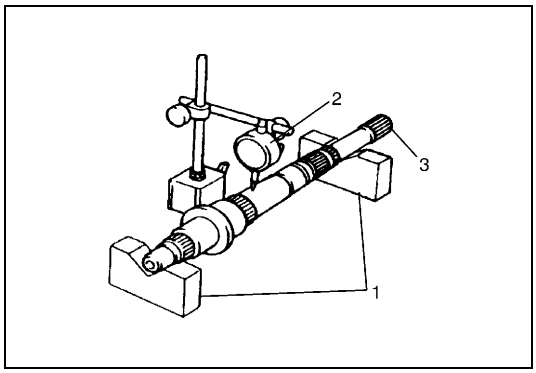

- Using "V" blocks (1) and dial gauge (2), check runout. If runout exceeds limit below, replace main shaft (3).

Main shaft runout:
limit: 0.015 mm (0.0006 in.)

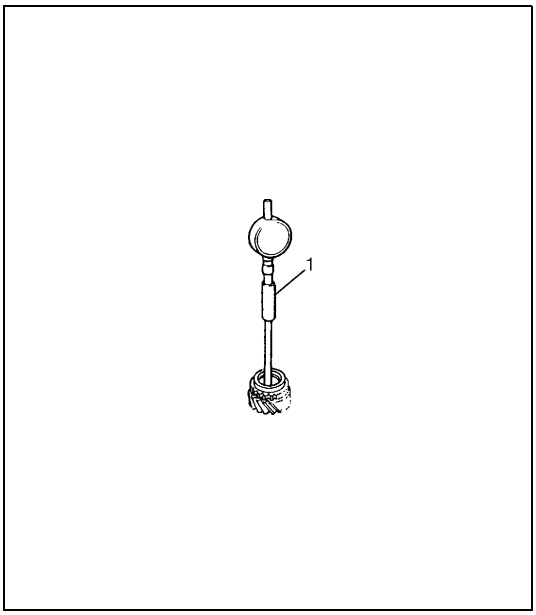

- Using cylinder gauge (1), check inside diameter of each gear. If its inside diameter exceeds specification, replace it.

Inside diameter of gear:
1st gear:
Standard: 46.015 – 46.040 mm (1.8116 – 1.8126 in.)
2nd gear
Standard: 53.015 – 53.040 mm (2.0872 – 2.0882 in.)
3rd gear
Standard: 44.015 – 44.040 mm (1.7329 – 1.7339 in.)

- Check chamfered part of each sleeve for damage and excessive wear, and replace as necessary.
- Check each synchronizer key and synchronizer spring and replace as necessary.
- Check splined portions and replace parts if excessive wear is found.

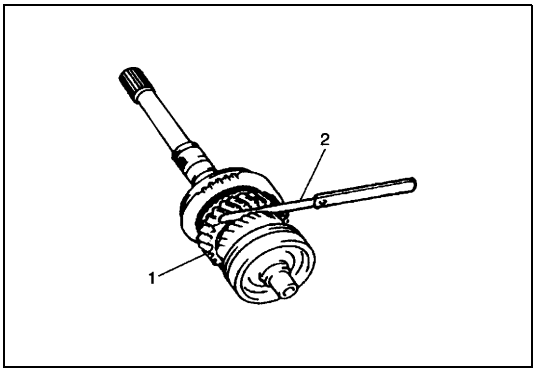

- Check 2nd gear (1) thrust clearance by using thickness gauge (2). If clearance is out of specification, repress-fit or replace defective part.

2nd gear thrust clearance:
Standard: 0.10 – 0.25 mm (0.004 – 0.009 in.)

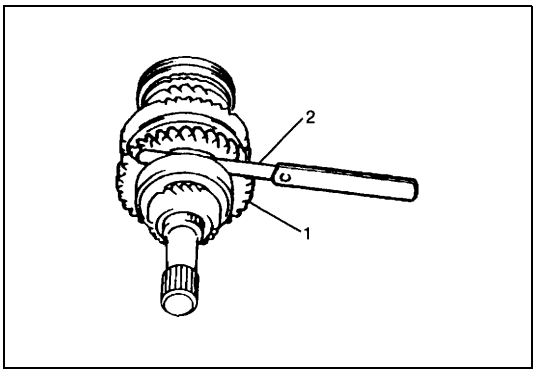

- Check low gear (1) thrust clearance by using thickness gauge (2).
  If clearance is out of specification, repress-fit or replace mainshaft bearing and 5th gear.

Low gear thrust clearance:
Standard: 0.15 – 0.45 mm (0.006 – 0.018 in.)

Counter shaft and reverse idle gear

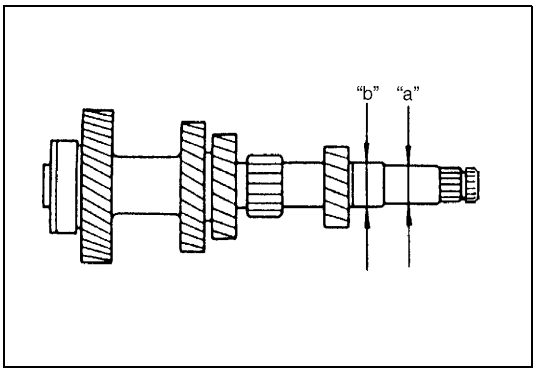

- Using micrometer, check diameter of counter shaft as shown in the figure. If measured valve is out of specification, replace it.

Counter shaft diameter (standard):
"a": 29.984 – 30.000 mm (1.1805 – 1.1811 in.)
"b": 34.000 – 34.015 mm (1.3386 – 1.3392 in.)

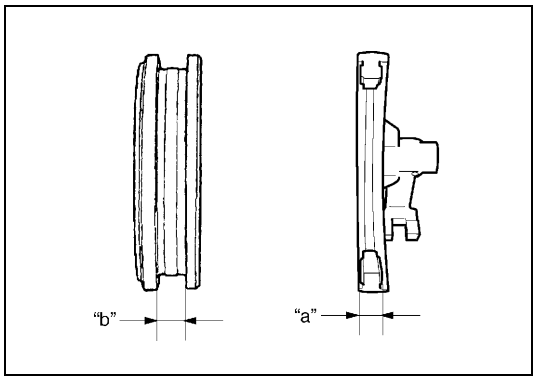

- Measure width "a" of 5th gear shift fork and groove width "b" of 5th gear synchronizer sleeve, and then calculate clearance "c" as follows:

Clearance "c" = "b" – "a"

If clearance exceeds limit, replace fork and sleeve.

Clearance "c" between fork and sleeve:
Standard: 0.26 – 0.84 mm (0.010 – 0.033 in.)
Limit: 1.0 mm (0.039 in.)

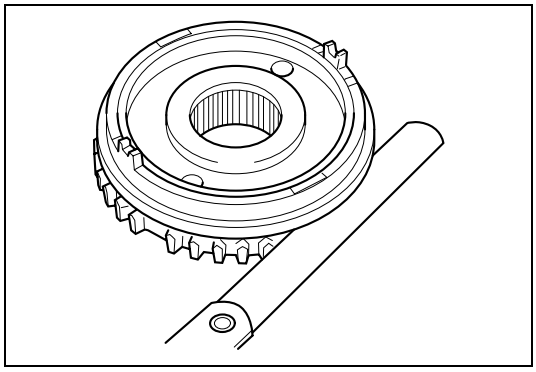

- Check clearance between synchronizer ring and synchronizer dog and each chamfered tooth of synchronizer dog and synchronizer ring and replace with new one, if necessary. Also, check gear tooth.

Clearance between synchronizer ring and synchronizer dog (counter shaft):
Standard: 0.68 – 1.32 mm (0.027 – 0.052 in.)
Service limit: 0.5 mm (0.020 in.)

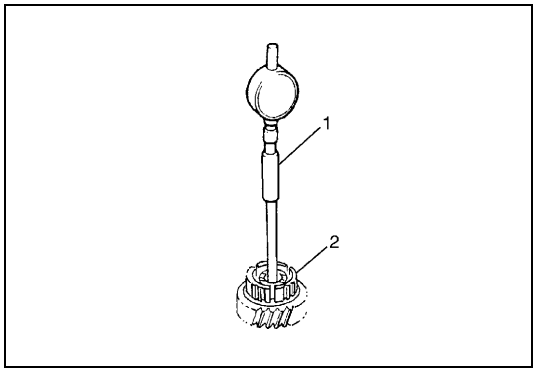

- Using cylinder gauge (1), check inside diameter of counter shaft 5th gear (2). If measured value exceeds specification, replace gear.

Counter shaft 5th gear diameter:
Standard: 38.015 – 38.040 mm (1.4967 – 1.4976 in.)

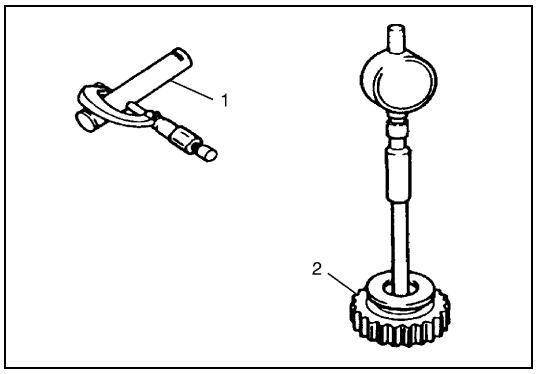

- Check oil clearance between reverse idle gear (2) and shaft (1) measuring inside diameter "a" of gear and diameter "b" of shaft and calculate as follows:

Clearance "c" = "a" – "b"

If clearance exceeds limit, replace gear and shaft.

Oil clearance "c" between reverse idle gear and shaft
Standard: 0.040 – 0.082 mm (0.0016 – 0.0032 in.)
Limit: 0.13 mm (0.005 in.)

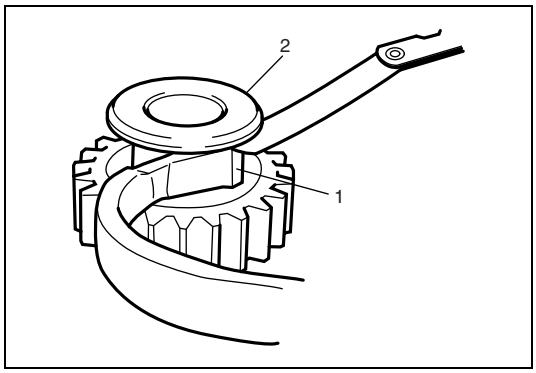

- Check clearance between reverse idle gear (2) and shoe (1) of reverse gear shift arm.
  If clearance exceeds limit, replace shoe.

Clearance between reverse idle gear and shoe
Standard: 0.05 mm – 0.35 mm (0.002 – 0.014 in.)
Limit: 0.5 mm (0.019 in.)

Unit Assembly

Gear Shift Lever Case

1) Wash and inspect each part and replace if necessary. Also check item as described below and correct whatever necessary carefully using reamer, oilstone and the like, wash it thoroughly and reassemble it.
   Item to be checked is;
   - Shift shaft should go into case smoothly.

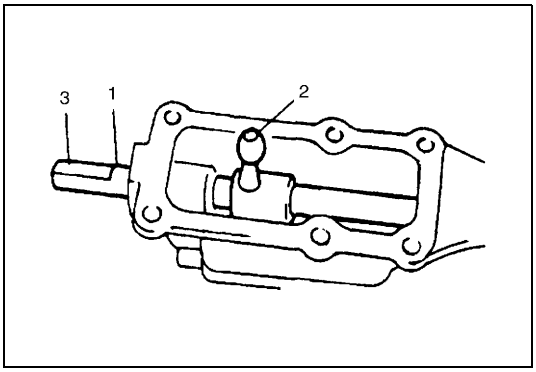

2) Insert shift shaft (1) as shown in figure while making sure that inner parts are in proper direction.

NOTE:
- **Cut off portion (3) in shift shaft (1) should face downward when installing shift shaft (1).**
- **Shift lever (2) should be installed at the same time.**

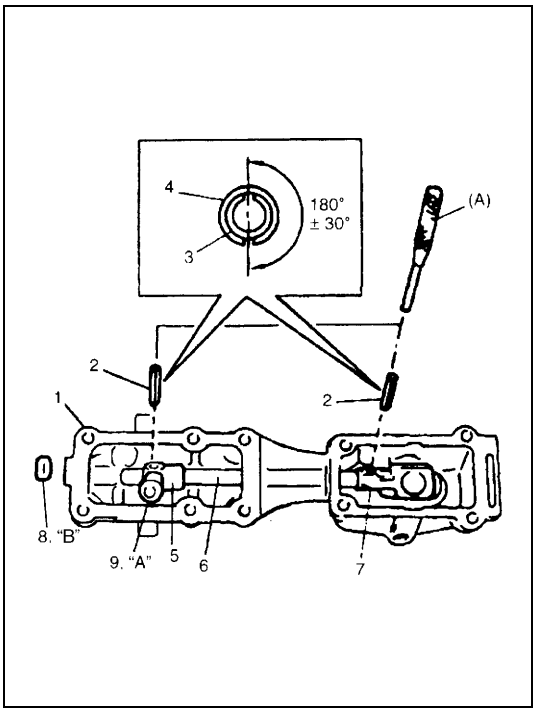

3) Drive in spring pins (2) for gear shift lever (5) and shift arm (7).

NOTE:
When driving in spring pins, position their slits 180° ± 30° apart.

Special tool
(A): 09925-78210

4) Apply sealant to new case plug (8) and drive it into lever case (1).

"B": Sealant 99000-31260

5) Apply grease to shift lever bush (9) and install it.

"A": Grease 99000-25010

3.	Inner spring pin
4.	Outer spring pin
6.	Gear shift shaft

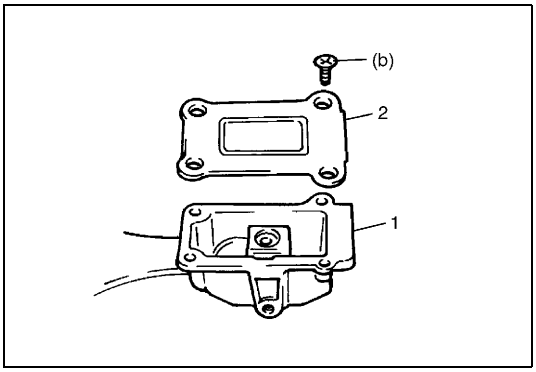

6) Install case plate (2) to gear shift lever case (1) and tighten screws to specified torque.

Tightening torque
Gear shift lever case plate screw
(b): 6 N·m (0.6 kg-m, 4.5 lb-ft)

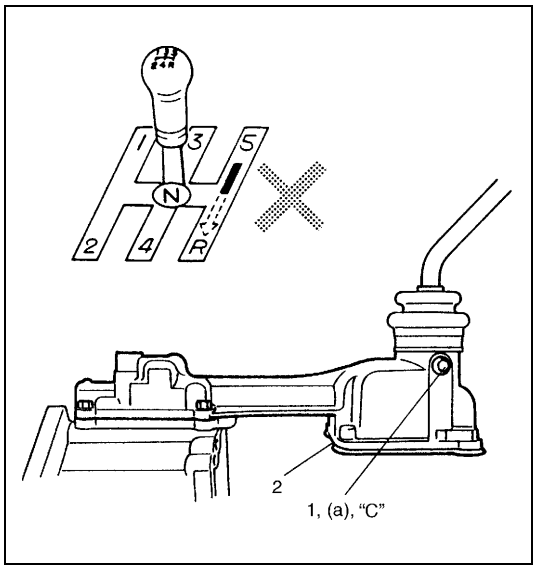

7) Install gear shift lever case (2) to transmission without using sealant for functional check.
8) Install shift control lever and check to make sure that it shifts smoothly according to shift pattern as shown in figure.

NOTE:

- **Apply thread lock cement "C" to control lever locating bolts (1) when retightening.**
- **Be sure to apply sealant to mating surface of gear shift lever case (2) for its final installation.**

"C": Cement 99000-32110

Tightening torque
Control lever locating bolt
(a): 17 N·m (1.7 kg-m, 12.5 lb-ft)

Sub-Assembly

Input shaft assembly

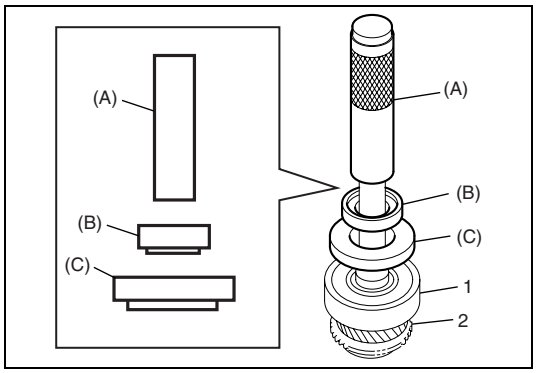

1) Bring bearing (1) so that its groove for C-ring is in the front of input shaft (2) and press-fit with special tools and press.

Special tool
(A): 09940-51710
(B): 09924-07720
(C): 09924-07710

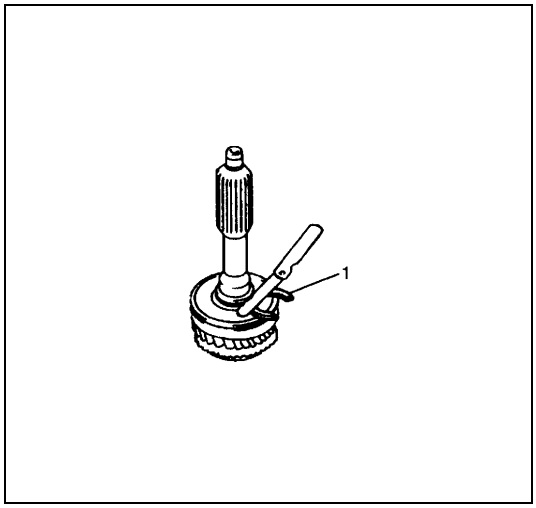

2) Select circlip (1) that will make thrust clearance of bearing 0.1 mm (0.0039 in) or less and install it.

Circlip thickness specification:

ID mark	Circlip thickness
A	2.10 – 2.15 mm (0.0827 – 0.0846 in.)
B	2.15 – 2.20 mm (0.0847 – 0.0866 in.)
C	2.20 – 2.25 mm (0.0867 – 0.0885 in.)
D	2.25 – 2.30 mm (0.0886 – 0.0905 in.)
E	2.30 – 2.35 mm (0.0906 – 0.0925 in.)
F	2.35 – 2.40 mm (0.0925 – 0.0945 in.)
G	2.40 – 2.45 mm (0.0945 – 0.0965 in.)

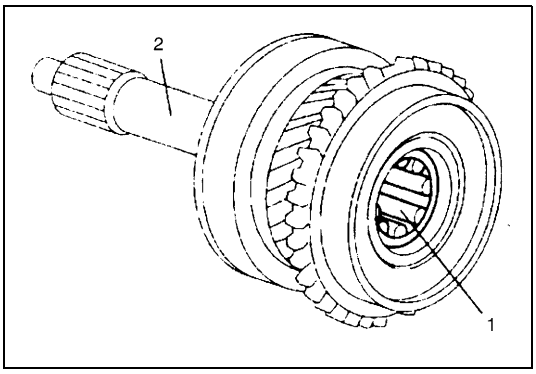

3) Install roller bearing (1) to input shaft (2).

Main shaft assembly

NOTE:

- **Before installation, wash each part and apply specified gear oil to sliding faces of bearing and gear.**
- **Use new circlips on shaft for installation. Don't reuse circlips.**

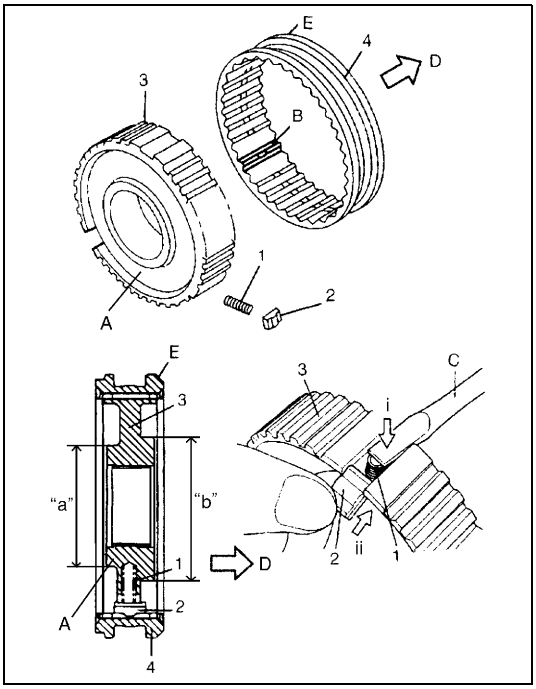

1) Assemble high speed synchronizer hub (3), sleeve (4), springs (1) and keys (2) according to the following procedure.
   a) Install synchronizer springs (1) and synchronizer keys (2) to high speed synchronizer hub (3) as shown in figure.
   b) Slide hub (3) in sleeve (4) so that chamfered side of sleeve (4) and small diameter boss side of hub (3) face opposite as shown in figure, also aligning hub slots with key location teeth of sleeve (4).

A:	Small diameter boss ("a" < "b")
B:	key location teeth
C:	Rod
D:	Input shaft side
E:	Chamfered side

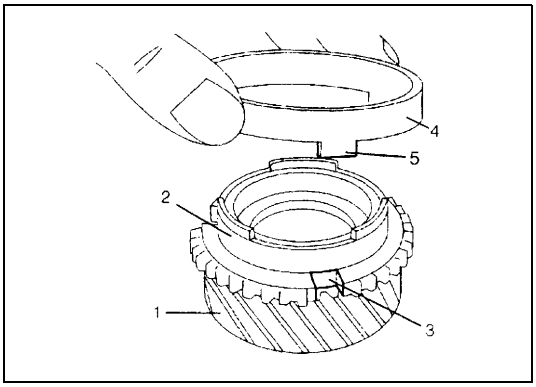

2) Assemble 3rd gear (1), synchronizer inner ring (2), synchronizer cone ring (4) and synchronizer outer ring according to the following procedure.
   a) Install the synchronizer inner ring (2) to 3rd gear (1).
   b) Install synchronizer cone ring (4) to 3rd gear (1).

NOTE:

Fit protrusion (5) of synchronizer cone ring (4) into groove (3) of 3rd gear.

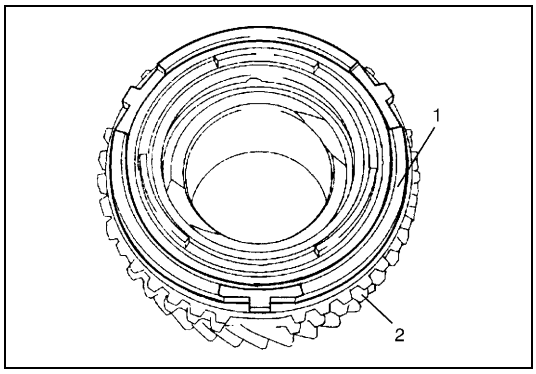

c) Install synchronizer outer ring (1) to 3rd gear (2).

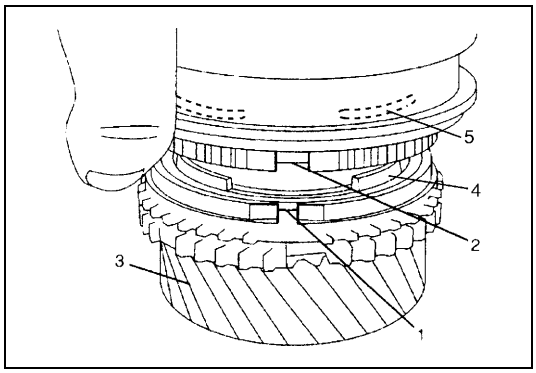

d) Align protrusion of synchronizer outer ring (1) into slot of synchronizer hub (2), and then attach high speed synchronizer sleeve and hub assembly to 3rd gear (3). Also align protrusion (4) of synchronizer inner ring and dent (5) of high speed synchronizer hub.

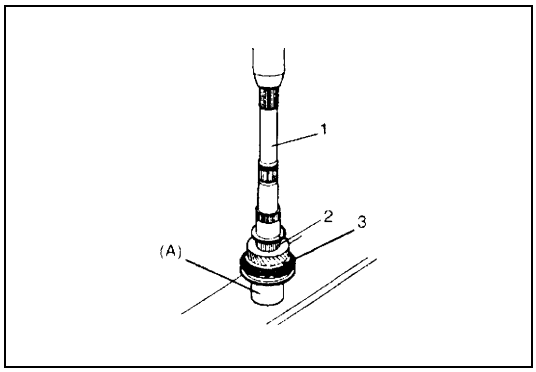

3) Install needle bearing (2) to main shaft (1) and press fit 3rd gear high speed synchronizer sleeve and hub assembly (3), which was assembled in step a) through d), to main shaft (1) using special tool and press.

Special tool
(A): 09940-53111

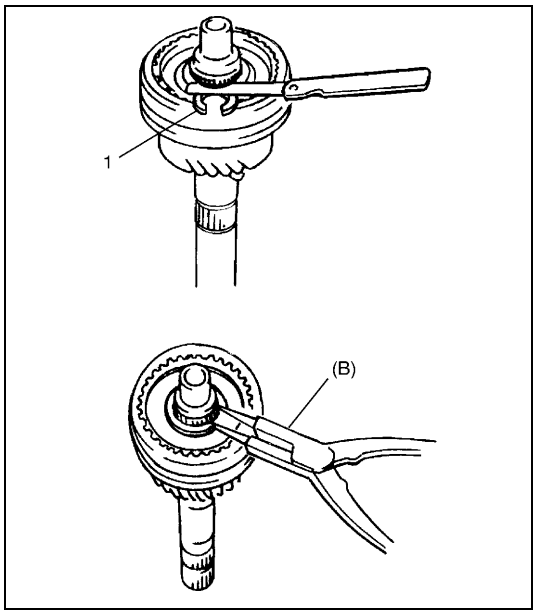

4) Select circlip (1) that will make thrust clearance of high speed synchronizer hub 0.1 mm (0.0039 in) or less and install it.

Circlip thickness specification:

ID mark	Circlip thickness
A	1.80 – 1.85 mm (0.0709 – 0.0728 in.)
B	1.85 – 1.90 mm (0.0729 – 0.0748 in.)
C	1.90 – 1.95 mm (0.0749 – 0.0767 in.)
D	1.95 – 2.00 mm (0.0768 – 0.0787 in.)
E	2.00 – 2.05 mm (0.0788 – 0.0807 in.)
F	2.05 – 2.10 mm (0.0808 – 0.0826 in.)
G	2.10 – 2.15 mm (0.0826 – 0.0846 in.)

Special tool
(B): 09900-06107

5) After installing circlip, check that 3rd gear turns lightly.

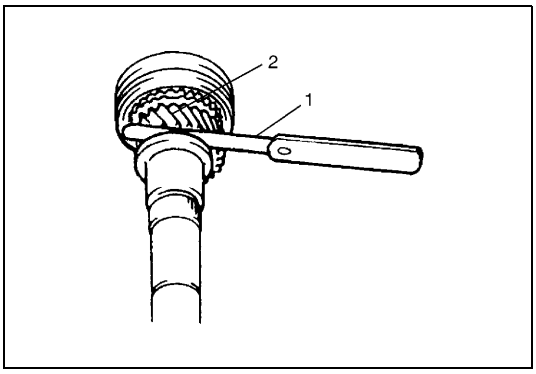

6) Check 3rd gear (2) thrust clearance using thickness gauge (1). If clearance is out of specification, repress-fit or replace.

3rd gear thrust clearance:
Standard: 0.10 – 0.25 mm (0.004 – 0.009 in.)

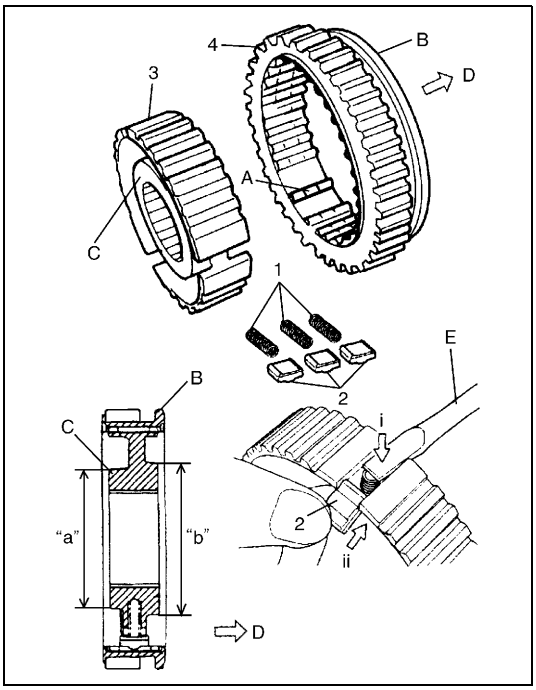

7) Assemble low speed synchronizer hub (3), sleeve (4), springs (1) and keys (2) according to the following procedure.
   a) Install Synchronizer springs (1) and synchronizer keys (2) to low speed synchronizer hub (3) as shown in figure.
   b) Slide low speed synchronizer hub (3) in sleeve (4) so that flange side of sleeve (4) and small diameter boss side of hub (3) face opposite as shown the figure, also aligning hub slots with key location teeth of sleeve (4).

A:	Key location teeth
B:	Flange side
C:	Small diameter boss ("a" < "b")
D:	2nd gear side
E:	Rod

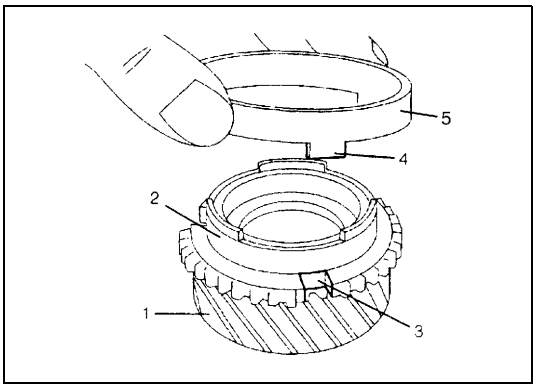

8) Assemble 2nd gear (1), synchronizer inner ring (2), synchronizer cone ring (5) and synchronizer outer ring according to the following procedure.
   a) Install synchronizer inner ring (2) to 2nd gear (1).
   b) Install synchronizer cone ring (5) to 2nd gear (1).

NOTE:

Fit protrusion (4) of synchronizer cone ring (5) into groove (3) of 2nd gear.

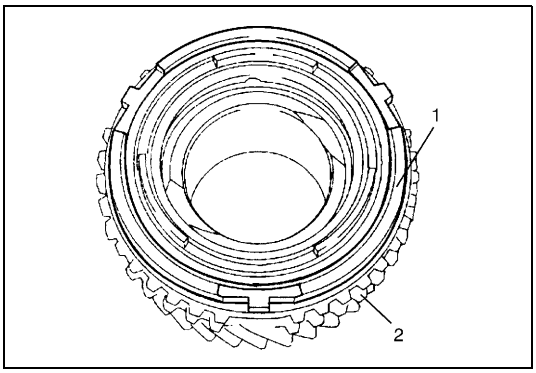

c) Install synchronizer outer ring (1) to 2nd gear (2).

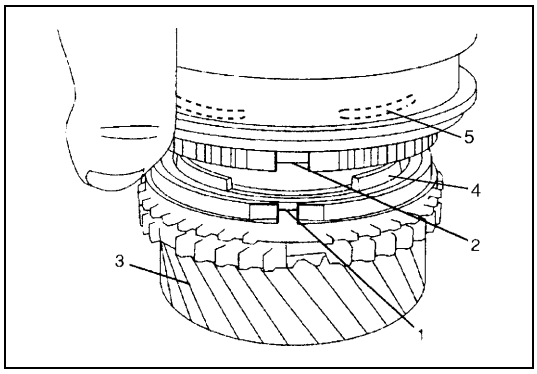

d) Install 2nd gear (3), fitting slot of low speed synchronizer hub (1) in protrusion of synchronizer outer ring (2) as shown in the figure. Also align protrusion (4) of synchronizer inner ring and dent (5) of low speed synchronizer hub.

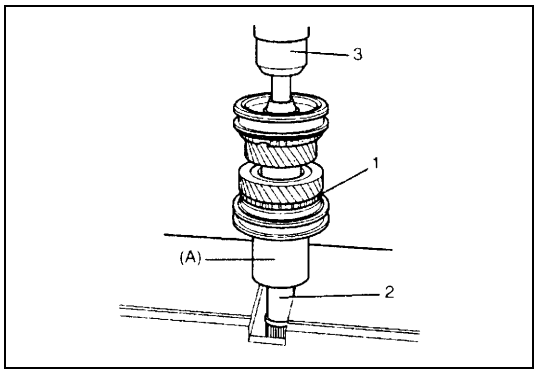

9) Install the needle bearing to the 2nd gear, then as then figure shows press fit 2nd gear low speed synchronizer sleeve and hub assembly (1), which was assembled in step a) through d), into main shaft (2) using a special tool. Press-fit low speed sleeve and hub assembly with special tool and press (3).

Special tool
(A): 09944-78210

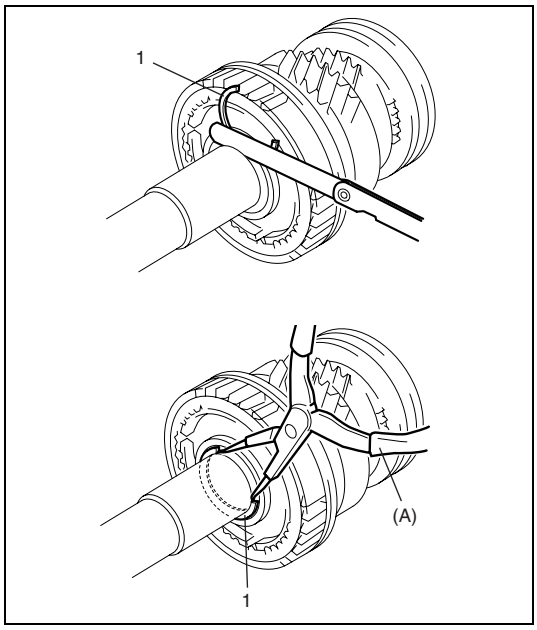

10) Select circlip (1) that will make thrust clearance of low speed synchronizer hub 0.1 mm (0.0039 in.) or less and install it.

Circlip thickness specification:

ID mark	Circlip thickness
A	2.30 – 2.35 mm (0.0906 – 0.0925 in.)
B	2.35 – 2.40 mm (0.0925 – 0.0945 in.)
C	2.40 – 2.45 mm (0.0945 – 0.0965 in.)
D	2.45 – 2.50 mm (0.0965 – 0.0984 in.)
E	2.50 – 2.55 mm (0.0984 – 0.1004 in.)
F	2.55 – 2.60 mm (0.1004 – 0.1024 in.)
G	2.60 – 2.65 mm (0.1024 – 0.1043 in.)

Special tool
(A): 09900-06107

11) Check 2nd gear thrust clearance, referring to “Main Shaft Assembly” under “Sub-Assembly” of “Component Inspection” in this section.

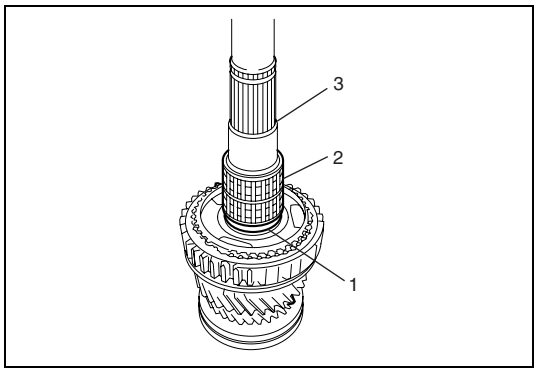

12) Install spacer (1) and needle bearing (2) to main shaft (3).

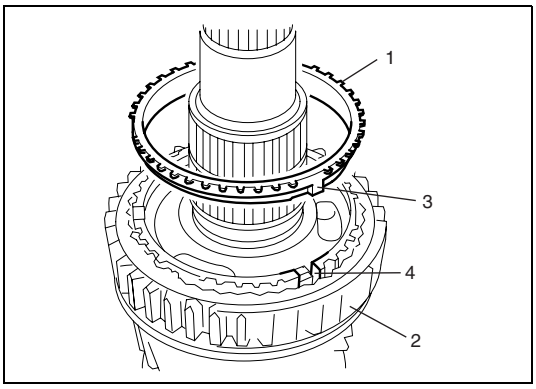

13) Install synchronizer outer ring (1) to low speed synchronizer hub (2).

NOTE:

Fit protrusion (3) of synchronizer outer ring (1) into groove (4) of low speed synchronizer hub (2).

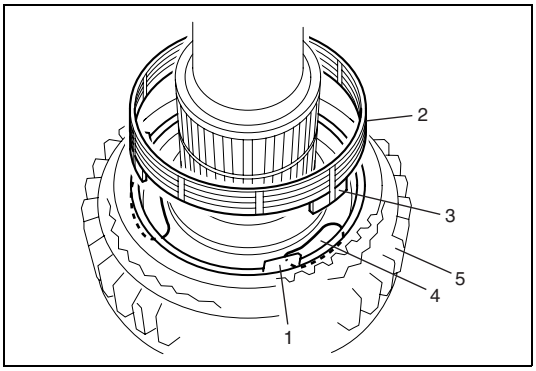

14) Install synchronizer cone ring (1) and synchronizer inner ring (2).

NOTE:

Fit protrusion (3) of synchronizer inner ring (2) into dent (4) of low speed synchronizer hub (5).

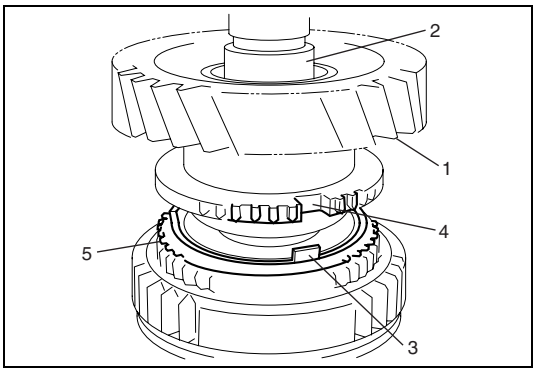

15) Install low gear (1) to main shaft (2).

NOTE:

- **Fit protrusion (3) of synchronizer cone ring (5) into groove (4) of low gear (1).**
- **After installation, check synchronizer outer ring (5) moves in circumferential direction.**

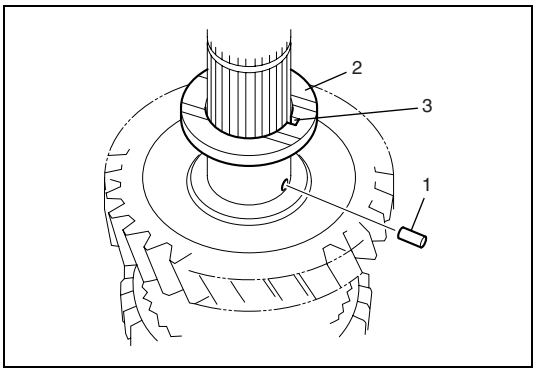

16) Install pin (1) and low gear thrust washer (2) to main shaft.

NOTE:

Be sure to engage cut (3) in low gear thrust washer (2) to pin (1).

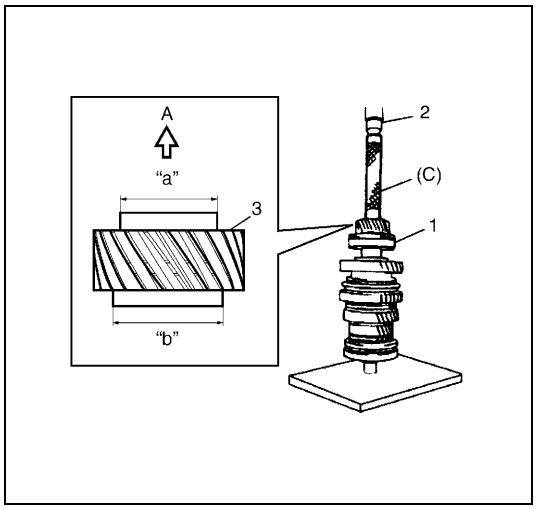

17) Press-fit main shaft bearing (1) and 5th gear (3) with special tool and press (2).

NOTE:

- **Bring bearing so that its groove for circlip is in the rear.**
- **Bring 5th gear (3) so that its small diameter boss "a" is in the rear.**

Special tool
(C): 09940-51710

A: Rear side ("a" < "b")

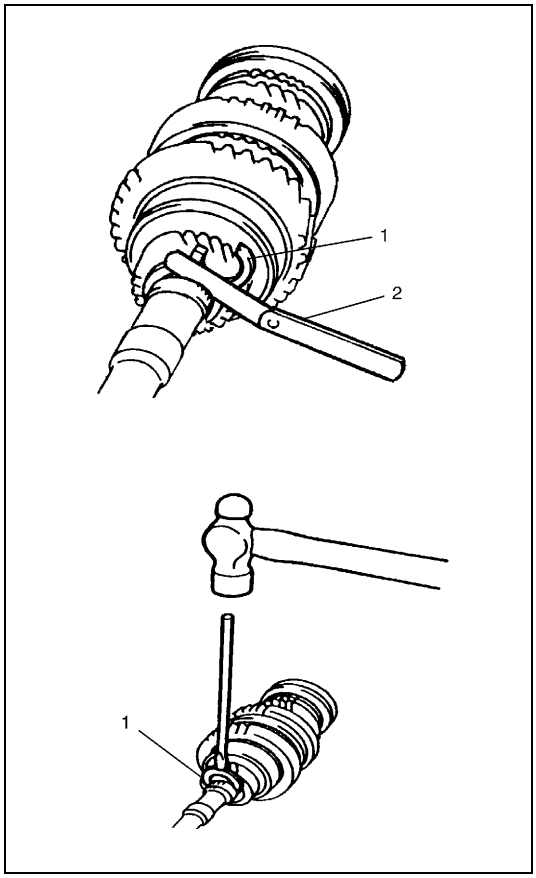

18) Select circlip (1) that will make its thrust clearance 0.1 mm (0.0039 in.) or less and install it.

Circlip thickness specification:

ID mark	Circlip thickness
C	2.75 – 2.80 mm (0.1083 – 0.1102 in.)
D	2.80 – 2.85 mm (0.1102 – 0.1122 in.)
E	2.85 – 2.90 mm (0.1122 – 0.1142 in.)
F	2.90 – 2.95 mm (0.1142 – 0.1161 in.)
G	2.95 – 3.00 mm (0.1161 – 0.1181 in.)
H	3.00 – 3.05 mm (0.1181 – 0.1201 in.)
J	3.05 – 3.10 mm (0.1201 – 0.1220 in.)
K	3.10 – 3.15 mm (0.1220 – 0.1240 in.)
L	3.15 – 3.20 mm (0.1240 – 0.1260 in.)
M	3.20 – 3.25 mm (0.1260 – 0.1280 in.)
N	3.25 – 3.30 mm (0.1280 – 0.1299 in.)
P	3.30 – 3.35 mm (0.1299 – 0.1319 in.)

2. Thickness gauge

19) Check low gear clearance, referring to "Main Shaft Assembly" under "Sub Assembly" of "Components Inspection" in this section.

Counter shaft and reverse idle gear

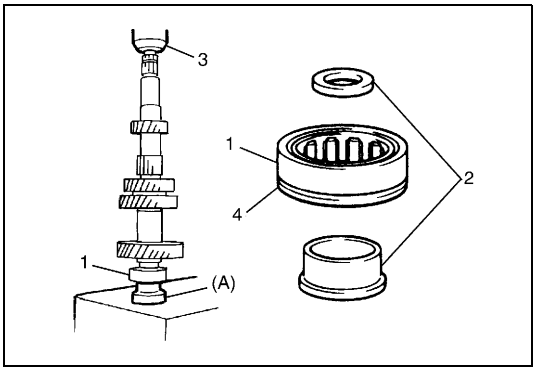

1) Set inner race (2) to counter shaft front bearing (1) and press-fit bearing with press (3) and special tool.

NOTE:

When installing bearing, bring it so that its groove (4) for C-ring as shown.

Special tool
(A): 09940-54950

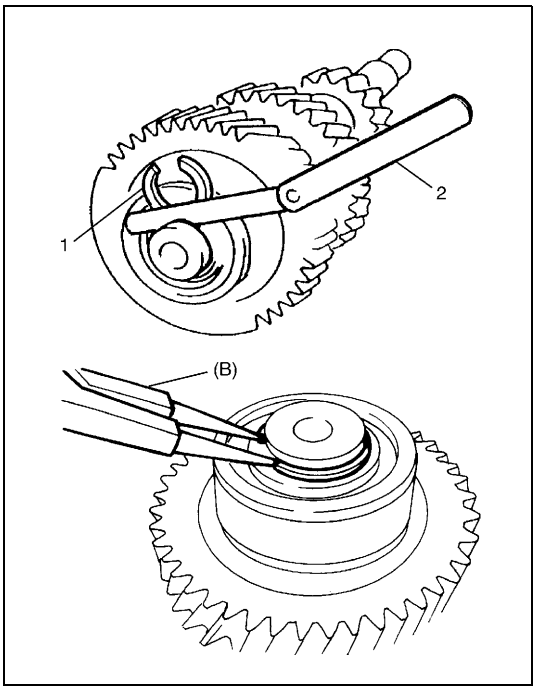

2) Select circlip that will make its thrust clearance 0.1 mm (0.0039 in.) or less and install it.

Circlip thickness specification:

ID mark	Circlip thickness
A	2.00 – 2.05 mm (0.0785 – 0.0807 in.)
B	2.05 – 2.10 mm (0.0807 – 0.0826 in.)
C	2.10 – 2.15 mm (0.0827 – 0.0846 in.)
D	2.15 – 2.20 mm (0.0847 – 0.0866 in.)
E	2.20 – 2.25 mm (0.0867 – 0.0885 in.)
F	2.25 – 2.30 mm (0.0886 – 0.0905 in.)

Special tool
(B): 09900-06107

1.	Circlip
2.	Thickness gauge

Input shaft bearing retainer and oil seal

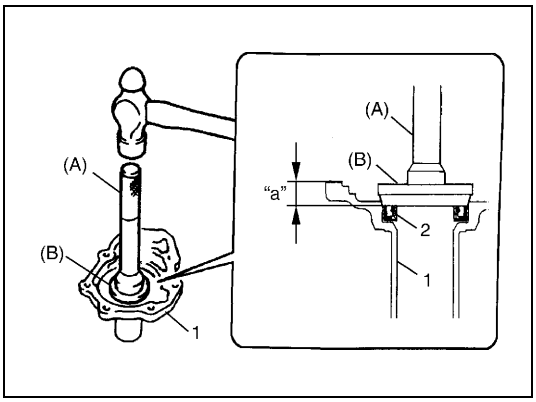

Press-fit new oil seal (2) to bearing retainer (1) up to the specified position using special tool as shown in figure.
Apply grease to oil seal lip.

Grease: 99000-25010

Special tool
(A): 09913-75821
(B): 09924-84510-004

Oil seal installing position
"a": 11.2 – 12.2 mm (0.44 – 0.48 in.)

Transmission rear case

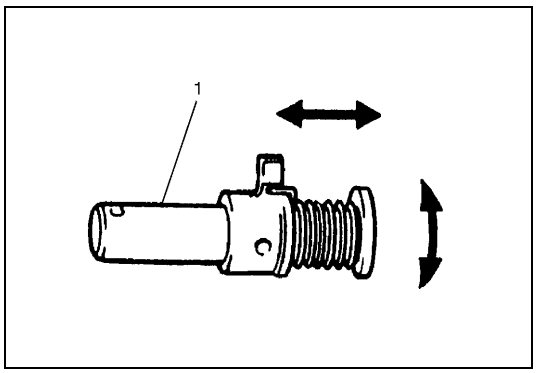

1) Check that interlock cam component (1) moves smoothly in both turning direction and sliding direction.

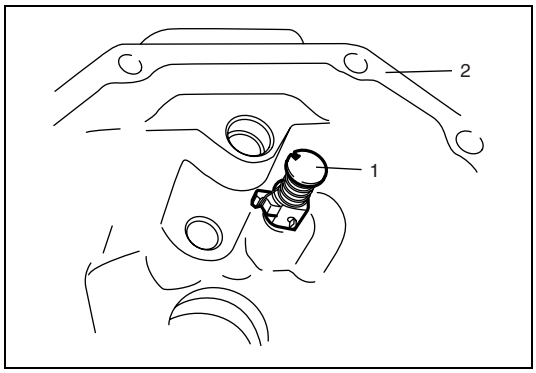

2) Insert interlock cam component (1) to rear case (2).

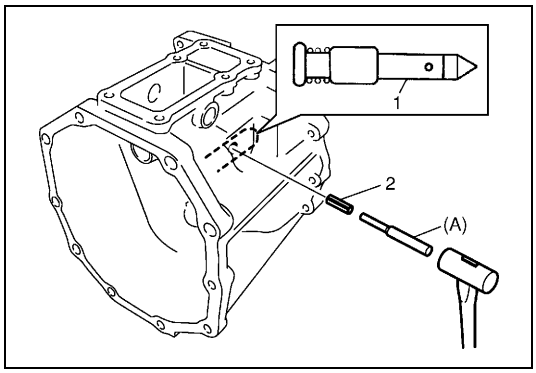

3) Set interlock cam component (1) as shown in figure and drive interlock cam pin (2) using special tool.

Special tool
(A): 09922-85811

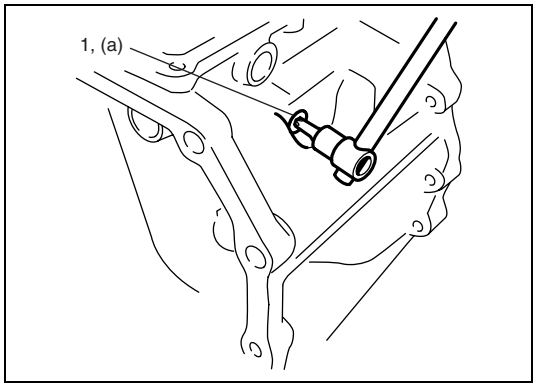

4) Install new interlock cam plug (1) and tighten it to specification.

Tightening torque
Interlock cam plug
(a): 18.5 N·m (1.85 kg-m, 13.5 lb-ft)

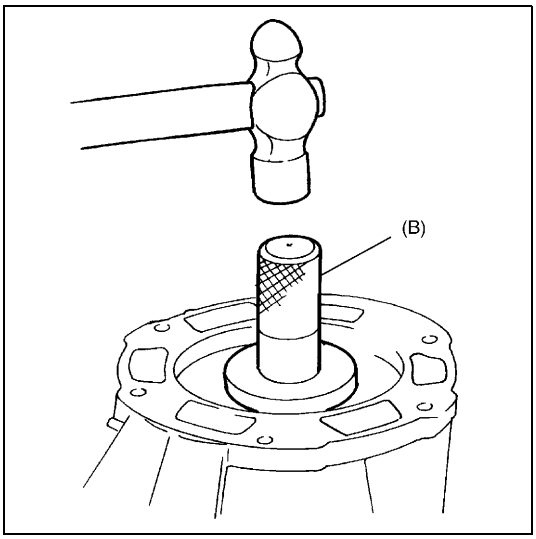

5) Install new oil seal to rear case so that end surface of oil seal becomes flush with that case. Apply grease to oil seal lip.

Grease: 99000-25010

Special tool
(B): 09913-75510

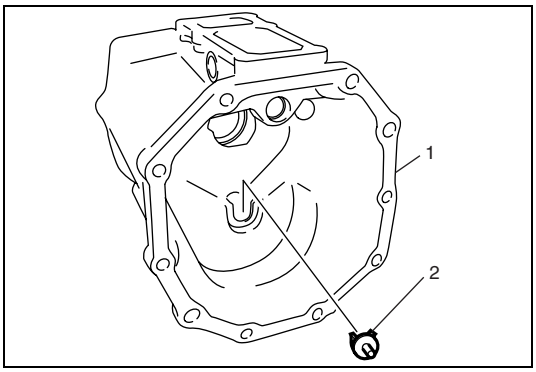

6) Install counter shaft gutter (2) to transmission rear case (1).

Transmission intermediate case and front case (location of knock and plug)

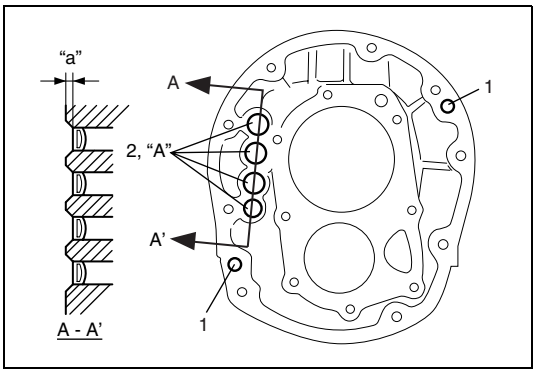

- Install knock pin (1) and plug (2) (sealant applied) to front case as shown.

"A": Sealant 99000-31260

Plug installing position
"a": 2.0 mm (0.079 in.)

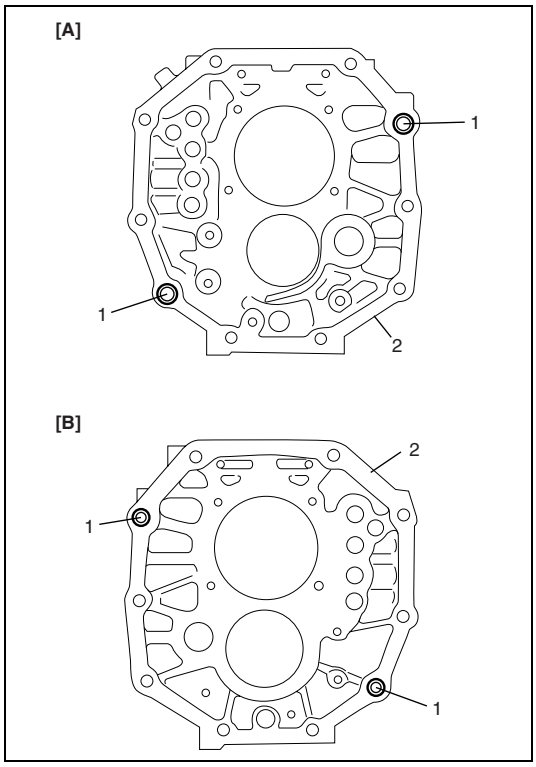

- Install knock (1) into front case (2) as shown in figure.

[A]:	Front side
[B]:	Rear side

Transmission Unit

NOTE:

- **Before installation, wash each part and apply specified gear oil to sliding faces of bearing and gear.**
- **Use new circlips on shaft for installation. Don't reuse circlips.**

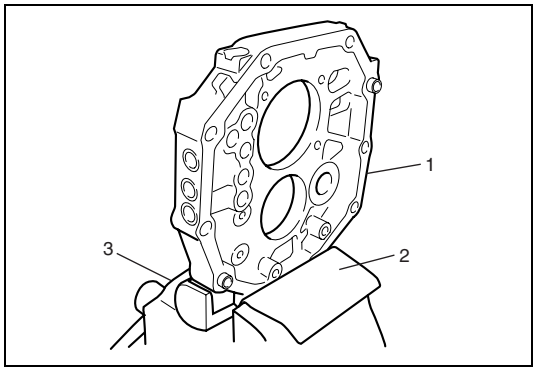

1) Set intermediate case (1) to vise (3).
   Clean mating surfaces of intermediate case both sides, if intermediate case is reused.

2.	Aluminum plate

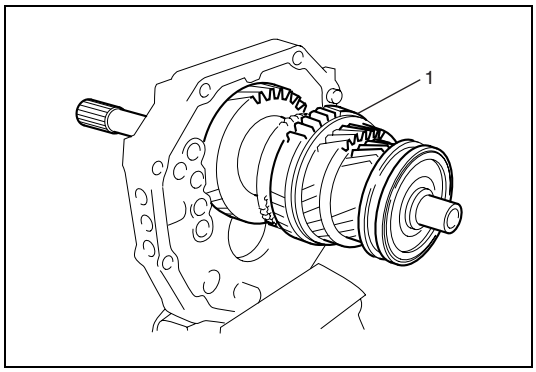

2) Install main shaft assembly (1) to intermediate case.

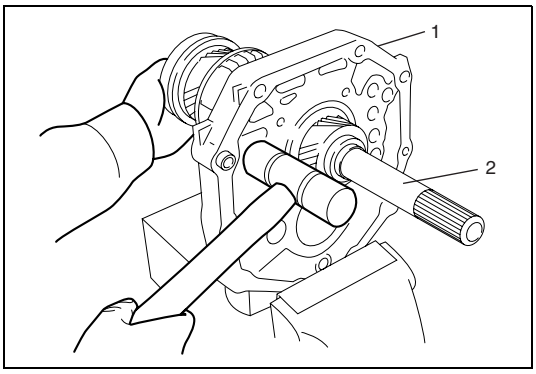

NOTE:

When fitting of intermediate case (1) and bearing is tight, tap rear face of intermediate case (1) with plastic hammer lightly as it will cause main shaft assembly (2) to install.

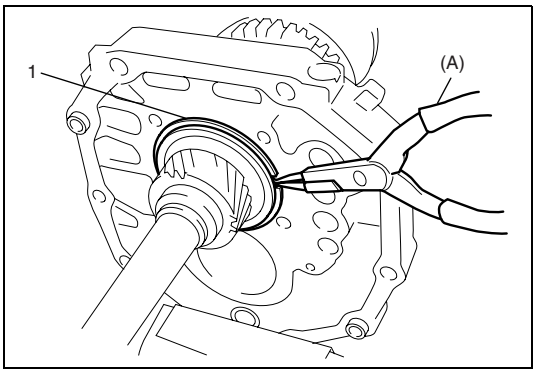

3) Fix bearing with new C-ring (1) using special tool.

Special tool
(A): 09900-06107

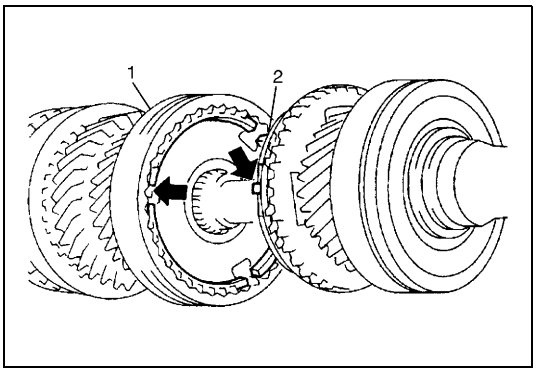

4) Align key slots of high speed synchronizer hub (1) and protrusion of 4th gear synchronizer ring (2) and set input shaft assembly to main shaft assembly.
   Check that input shaft assembly turns lightly.
5) Fix with new C-ring to counter shaft rear bearing.

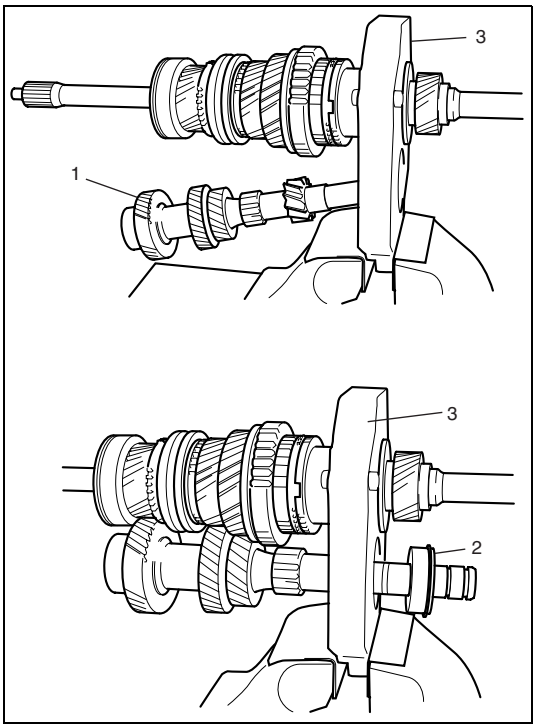

6) Install counter shaft (1) and rear bearing (2) to intermediate case (3).

NOTE:

- **When installing rear bearing (2), bring it so that its C-ring side is at rear side of intermediate case as shown in figure.**
- **When fitting of intermediate case (3) and rear bearing (2) is tight, tap outer race of rear bearing (2) lightly and evenly with plastic hammer.**

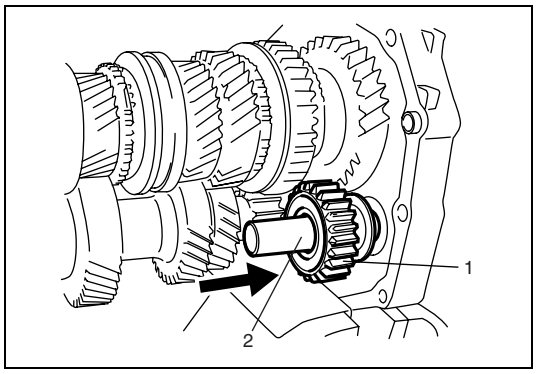

7) Install reverse idle gear (1) and shaft (2).

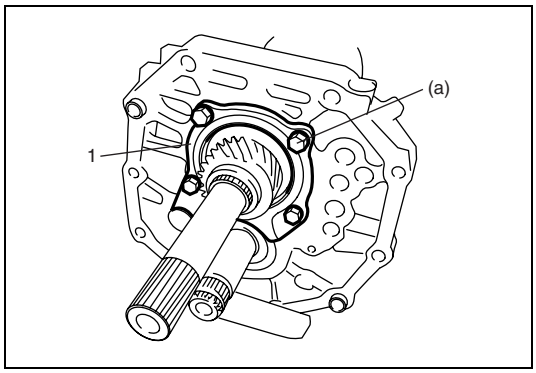

8) Install main and counter shaft bearing (1) to intermediate case.

Tightening torque
Main and counter shaft bearing retainer bolt
(a): 18 N·m (1.8 kg-m, 13.0 lb-ft)

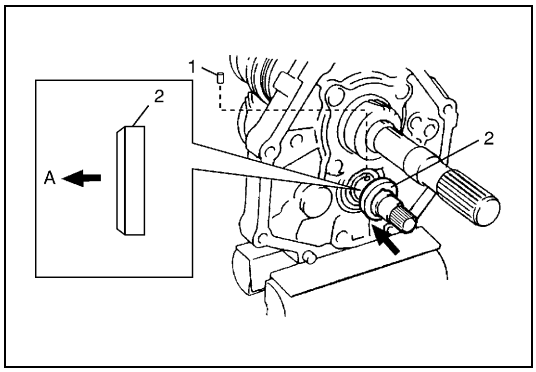

9) Set pin (1) and thrust washer (2) to counter shaft.

A: Intermediate case side

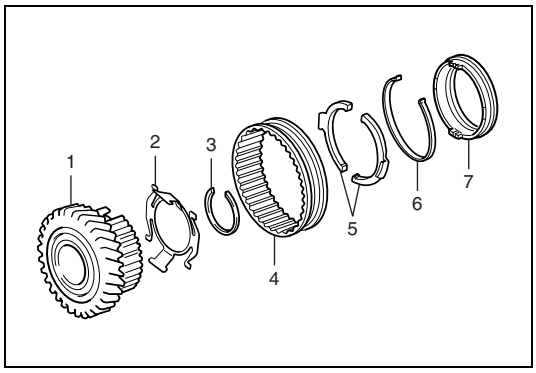

10) Assemble counter shaft 5th gear (1), plate spring (2), circlip (3), 5th & reverse synchronizer sleeve (4), balk levers (5), synchronizer key spring (6) and 5th & reverse synchronizer ring (7) according to the following procedure.

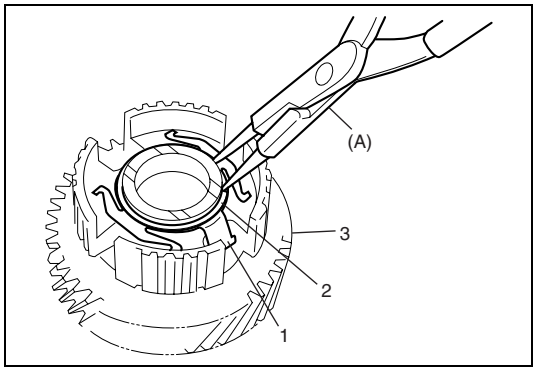

a) Fit plate spring (1) to counter shaft 5th gear (3) and fix spring with circlip (2) using special tool.

Special tool
(A): 09900-06107

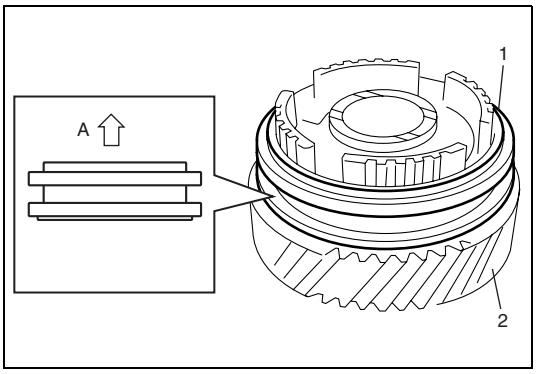

b) Install 5th & reverse synchronizer sleeve (1) to counter shaft 5th gear (2) in specified direction as shown in figure.

A: Chamfered side

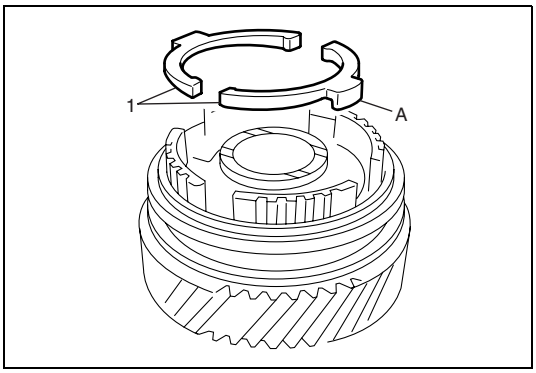

c) Fit balk levers (1) to counter shaft 5th gear in specified direction as shown in figure.

A: Protrusion

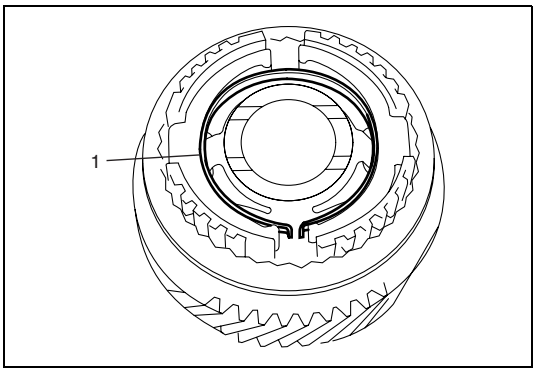

d) Install synchronizer key spring (1).

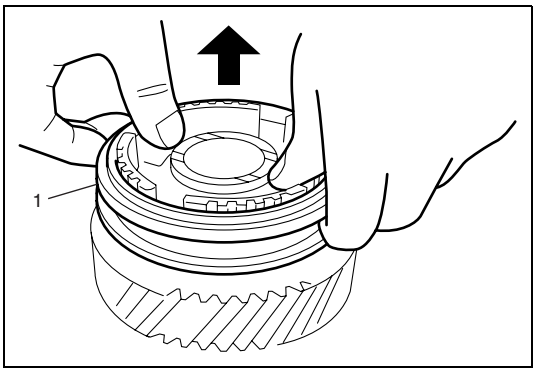

e) Push balk lever and synchronizer key spring, and slide 5th & reverse synchronizer sleeve (1) until sliding surface of balk lever is locked into key location teeth of 5th & reverse synchronizer sleeve (1).

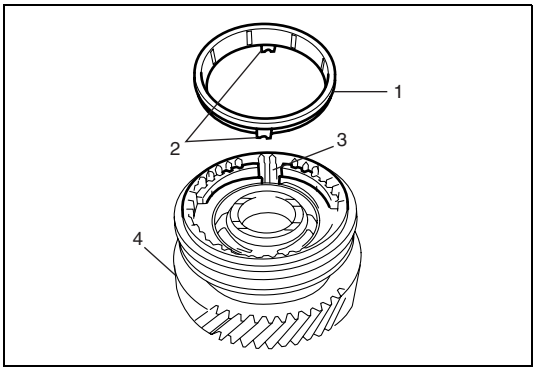

f) Install synchronizer ring (1) to counter shaft 5th gear (4).

NOTE:

Align protrusion (2) of synchronizer ring (1) and groove (3) of counter shaft 5th gear (4).

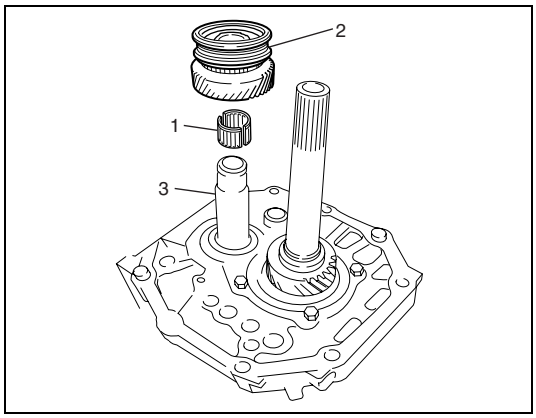

11) Install needle bearing (1) into counter shaft 5th gear assembly (2) which was assembled in Steps a) to f).
12) Install counter shaft 5th gear assembly (2) to counter shaft (3) facing gear side to plate.

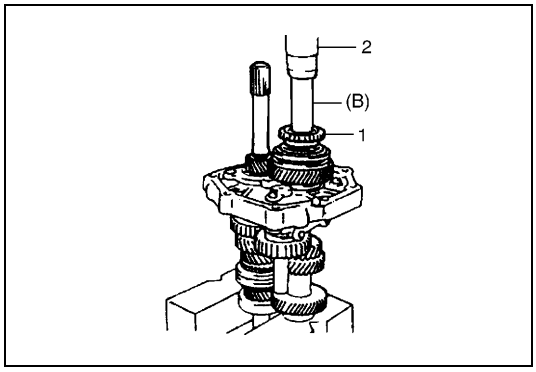

13) Press-fit 5th speed synchronizer dog (1) to counter shaft with press (2) and special tool.

Special tool
(B): 09913-84510

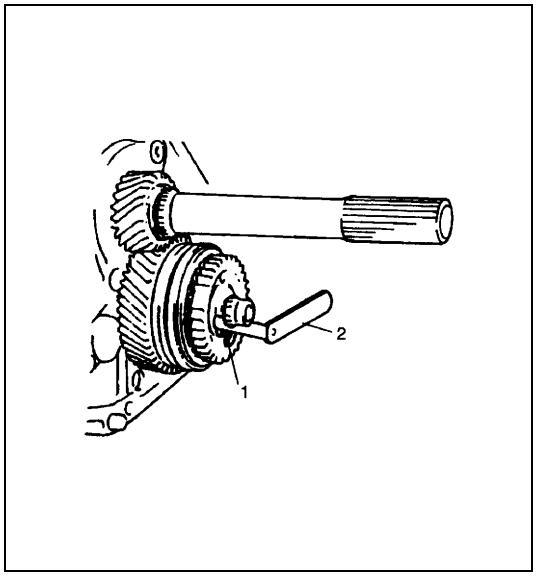

14) Select circlip (1) that will make clearance in circlip groove 0.1 mm (0.0039 in.) or less.

Circlip thickness specification:

ID mark	Circlip thickness
A	2.80 – 2.85 mm (0.1103 – 0.1122 in.)
B	2.85 – 2.90 mm (0.1122 – 0.1141 in.)
C	2.90 – 2.95 mm (0.1142 – 0.1161 in.)
D	2.95 – 3.00 mm (0.1162 – 0.1181 in.)
E	3.00 – 3.05 mm (0.1182 – 0.1200 in.)
F	3.05 – 3.10 mm (0.1201 – 0.1220 in.)
G	3.10 – 3.15 mm (0.1221 – 0.1240 in.)

2. Thickness gauge

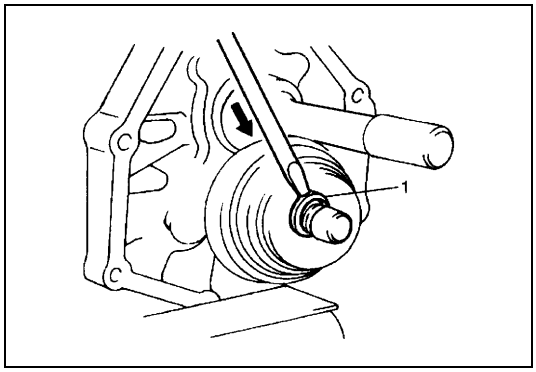

15) Fix with circlip (1) as shown in figure and check that counter shaft 5th gear turns lightly.

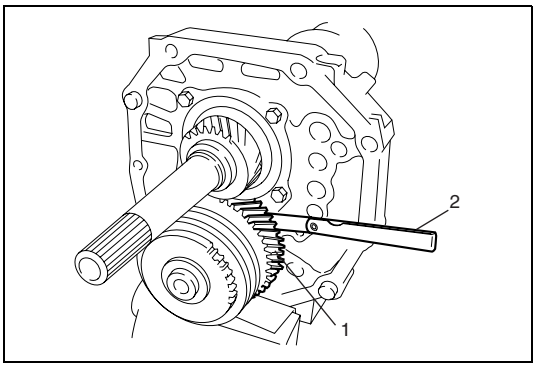

16) Check counter shaft 5th gear (1) thrust clearance using thickness gauge (2).
If clearance exceeds limit, repeat Step 1) to 15) again or replace defective part(s).

Counter shaft 5th gear thrust clearance
Standard: 0.10 – 0.35 mm (0.0040 – 0.0138 in.)

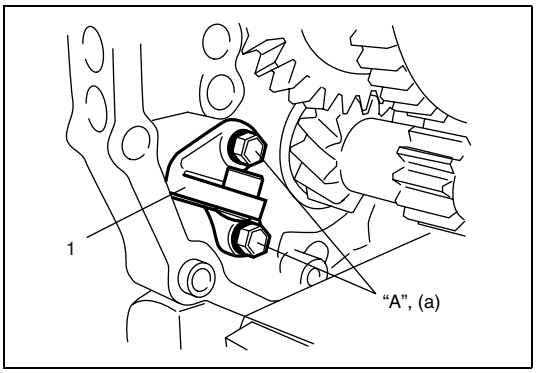

17) Install reverse gear shift arm bracket (1) to intermediate case.

Tightening torque
Reverse gear shift arm bracket bolt
(a): 18 N·m (1.8 kg-m, 13.0 lb-ft)

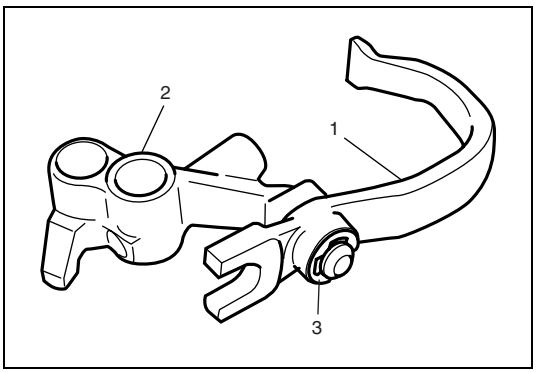

18) Install reverse gear shift arm (1) to reverse gear shift fork (2) fixing it with new circlip (3).

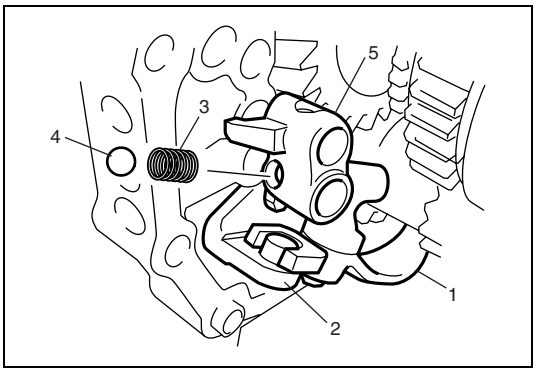

19) Fit reverse gear shift arm/fork (1) to reverse idle gear and then install reverse gear shift arm/fork (1) to reverse gear shift arm bracket (2).
20) Insert spring (3) and ball (4) to reverse gear shift fork (5) using magnet.

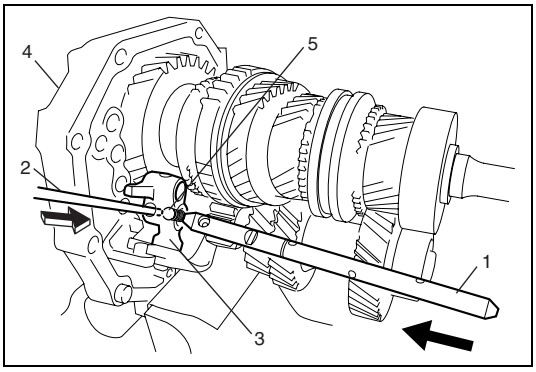

21) Insert 5th & reverse guide shaft (1) to reverse gear shift fork (3) and intermediate case (4) from front side pushing ball (5) by rod (2).

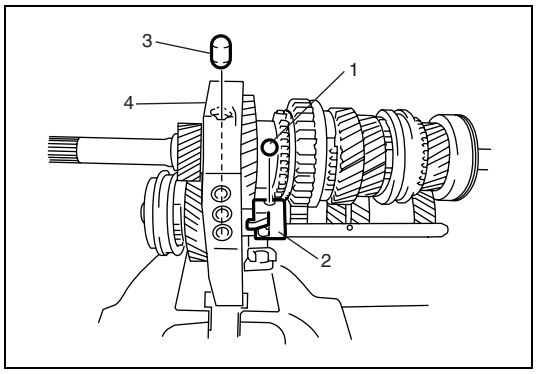

22) Insert ball (1) to reverse gear shift fork (2) and interlock pin (3) to intermediate case (4) using magnet.

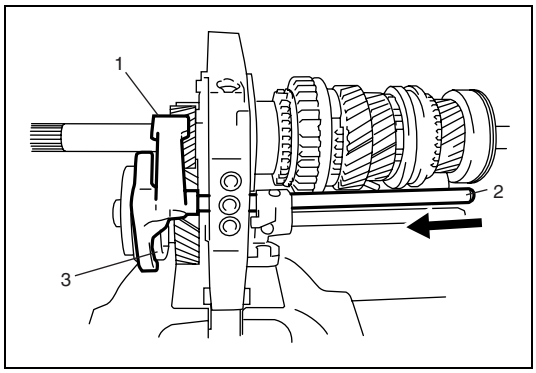

23) Install 5th gear shaft (2) after fitting 5th gear shift fork (1) to 5th & reverse synchronizer sleeve (3).

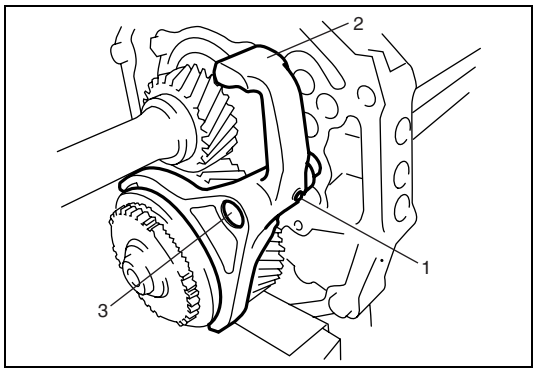

24) Drive spring pin (1) into 5th gear shift fork (2) and shaft (3) up to 5th gear shift fork (2) surface using plastic hammer.

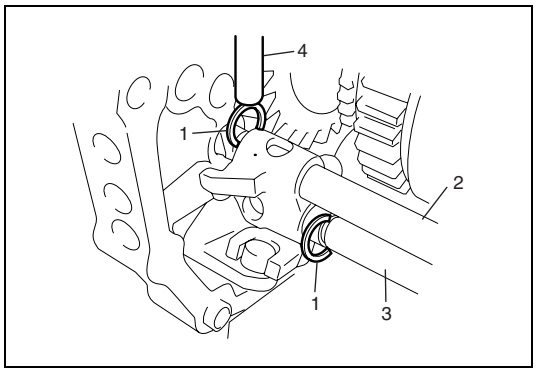

25) Install new circlip (1) to groove of shaft to fix 5th gear shift shaft (2) and 5th & reverse guide shaft (3) using lever (4) or the like and hammer.

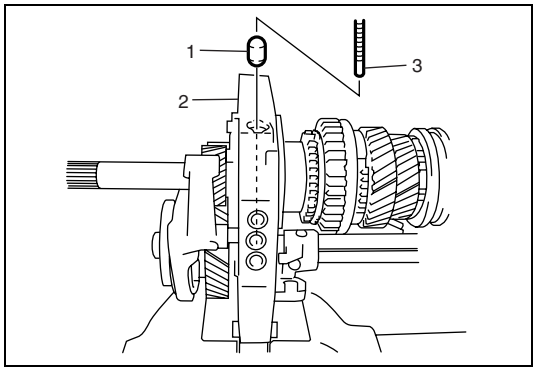

26) Insert interlock pin (1) to intermediate case (2) using magnet (3).

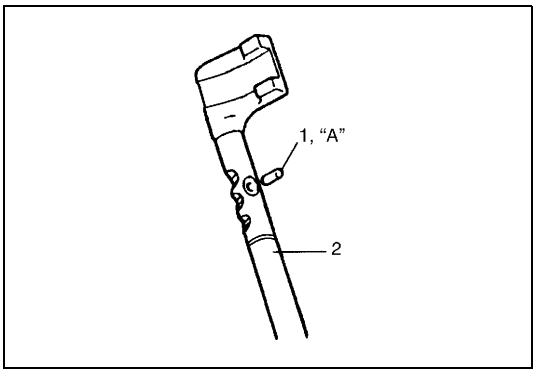

27) Apply grease to straight pin (1) and install straight pin (1) to low speed gear shift shaft (2).

“A”: Grease 99000-25010

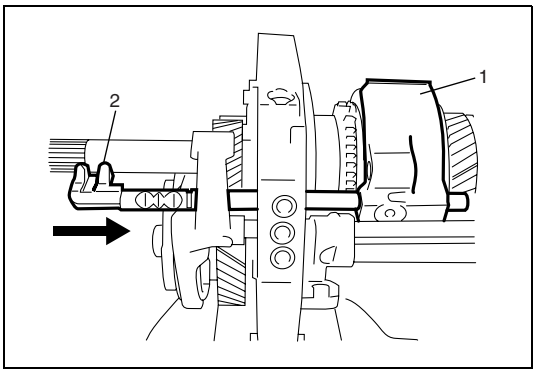

28) Install low speed gear shift fork (1) and low speed gear shift shaft (2).

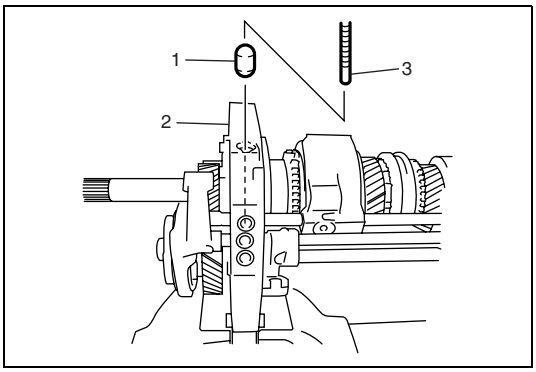

29) Insert interlock pin (1) to intermediate case (2) using magnet (3).

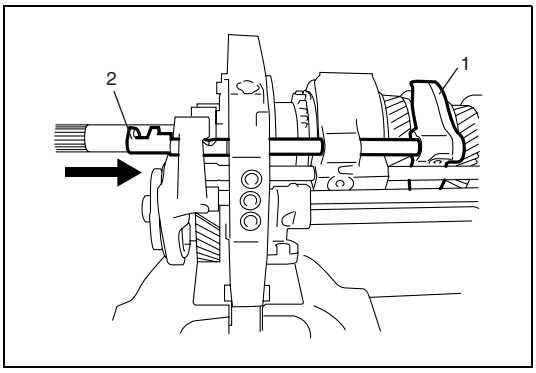

30) Install high speed gear shift fork (1) and high speed gear shift shaft (2).

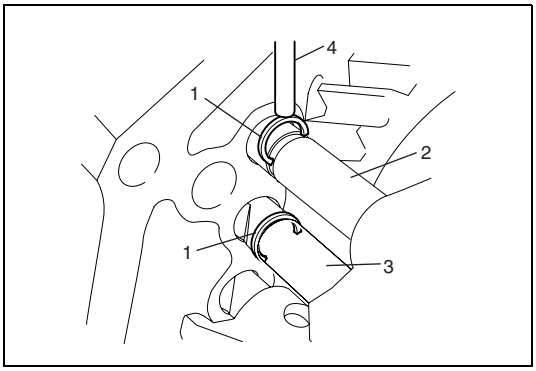

31) Fix with new circlips (1) to high speed gear shift shaft (2) and low speed gear shift shaft (3) using lever (4) or the like and hammer.

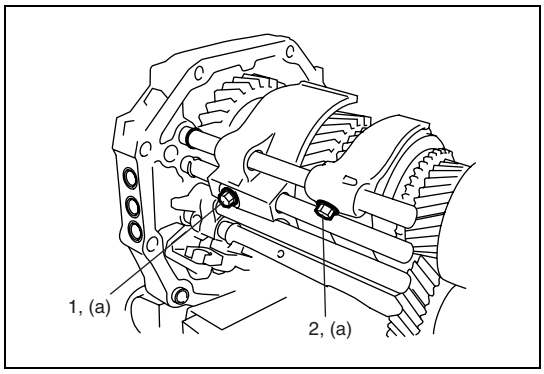

32) Install new low speed gear shift fork bolt (1) and high speed gear shift fork bolt (2) and tighten bolts to specified torque.

Tightening torque
High and low speed gear shift fork bolt
(a): 20 N·m (2.0 kg-m, 14.5 lb-ft)

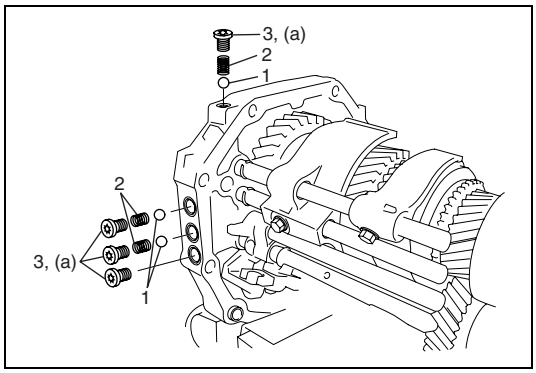

33) Install locating balls (1), locating springs (2) and new locating screws (3).

Tightening torque
Locating screw
(a): 19 N·m (1.9 kg-m, 14.0 lb-ft)

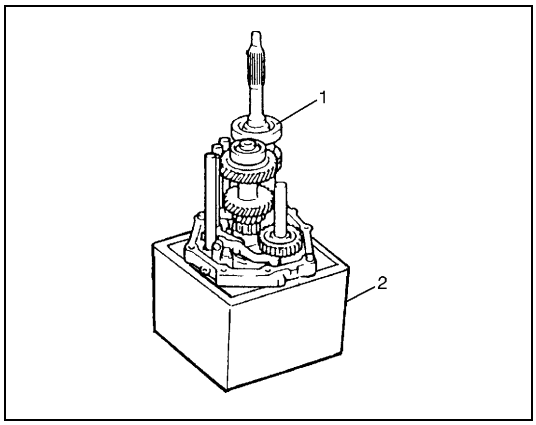

34) Place intermediate case assembly (1) upright as shown in figure using workbench (2) or the like.

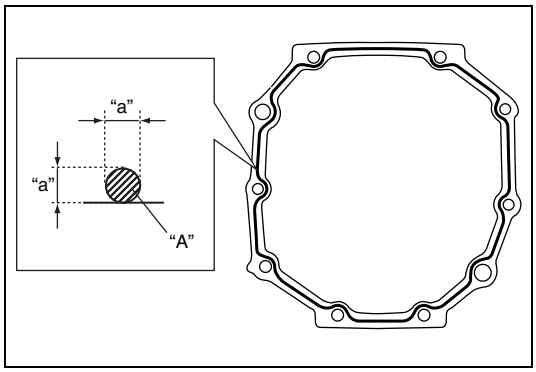

35) Apply sealant evenly to front case side of intermediate case (1) as shown.

"A": Sealant 99000-31260

"a": 1.2 mm (0.047 in)

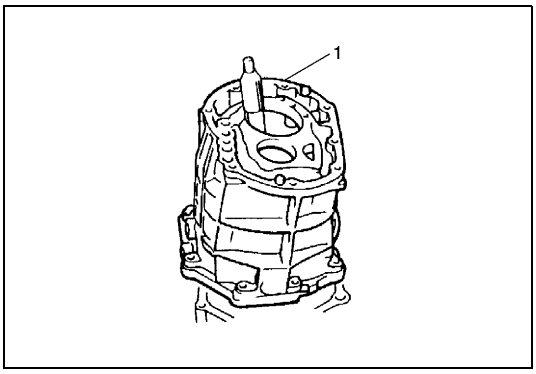

36) Clean mating surface of front case (1) and install it to intermediate case.

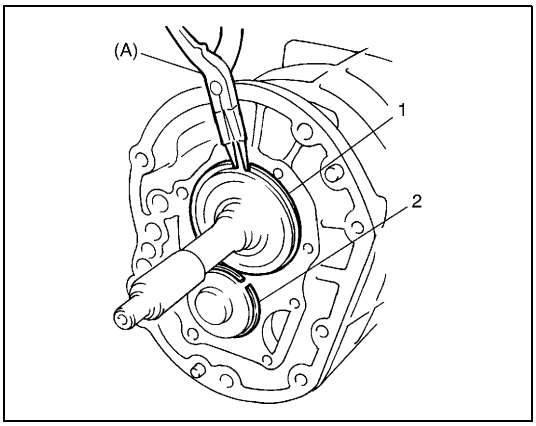

37) Fix C-rings (1, 2) to bearings as shown in the figure.

Special tool
(A): 09900-06107

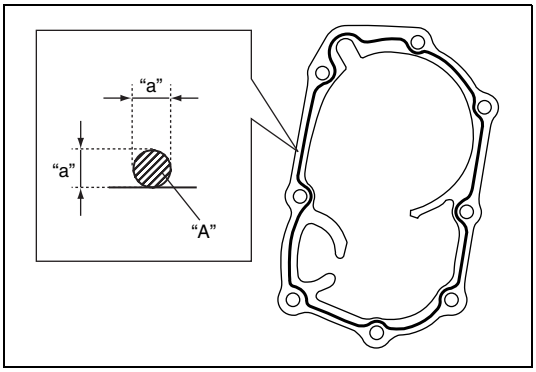

38) Clean mating surface of input shaft bearing retainer (1) and apply sealant evenly to input shaft bearing retainer (1).

"A": Sealant 99000-31260

"a": 1.2 mm (0.047 in)

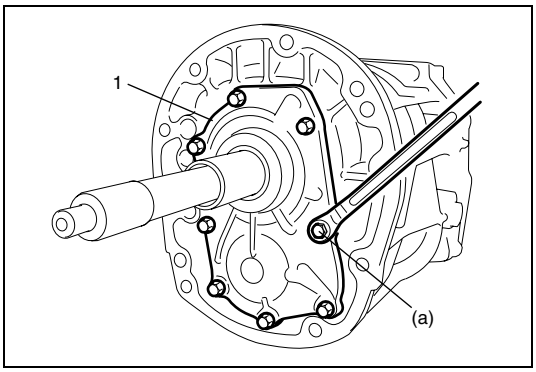

39) Using new input shaft bearing retainer bolt, install input shaft bearing retainer (1).

Tightening torque
Input shaft bearing retainer bolt
(a): 17 N·m (1.7 kg-m, 12.5 lb-ft)

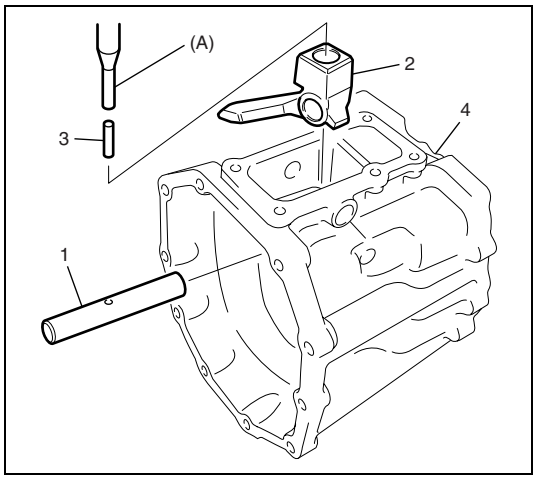

40) Insert gear shift inner shaft (1) and gear shift inner lever (2) to rear case (4).
41) Drive spring pin (3) into gear shift inner lever (2) using special tool.

Special tool
(A): 09922-85811

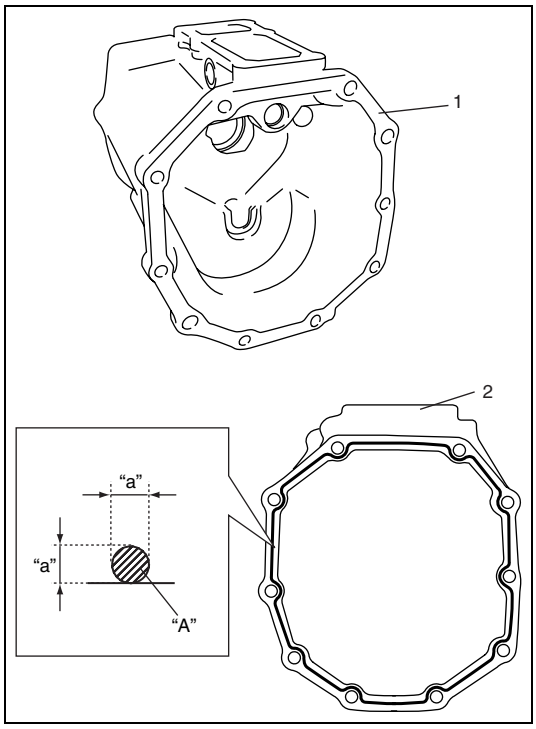

42) Clean mating surface of rear case (1) and apply sealant evenly to rear case side of intermediate case (2).

"A": Sealant 99000-31260

"a": 1.2 mm (0.047 in)

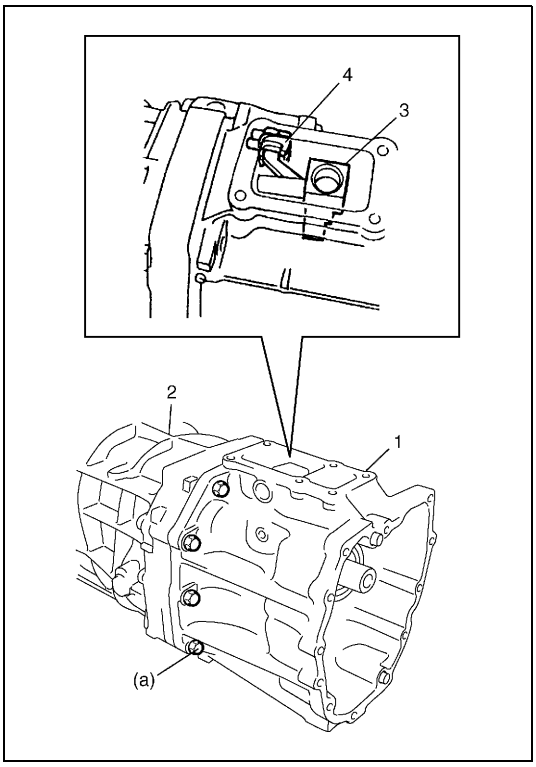

43) Install rear case (1) to intermediate case (2). With tip end of gear shift shaft inner lever (3) hooked on head of gear shift shaft (4). Tighten case bolts to specified torque.

Tightening torque
Rear case to intermediate case bolt
(a): 37 N·m (3.7 kg-m, 27.0 lb-ft)

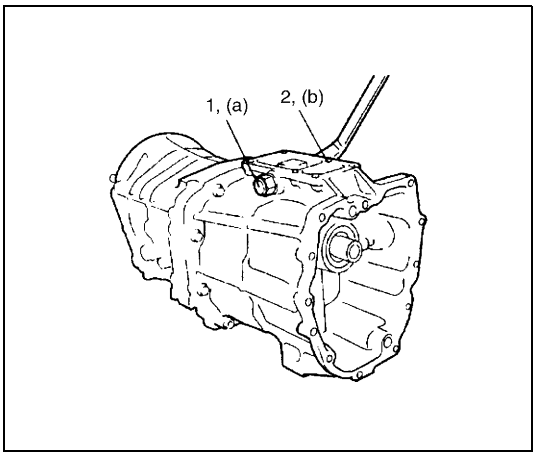

44) Tighten return spring low bolt (2) and return spring reverse bolt (Black color) (1).

NOTE:

Install return spring reverse bolt (Black color) (1) to left side of case.

Tightening torque
Return spring reverse bolt (Black color)
(a): 37 N·m (3.7 kg-m, 27.0 lb-ft)
Return spring low bolt
(b): 37 N·m (3.7 kg-m, 27.0 lb-ft)

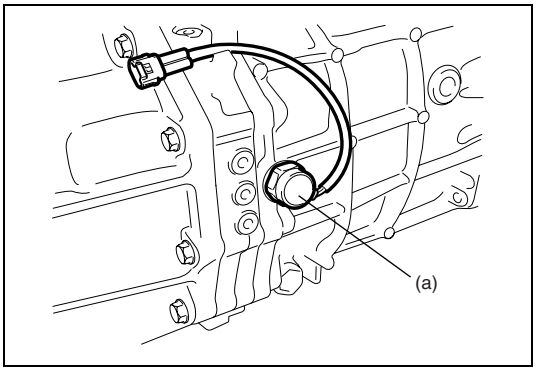

45) Install back-up light switch and new gasket.

Tightening torque
Back-up light switch
(a): 45 N·m (4.5 kg-m, 32.5 lb-ft)

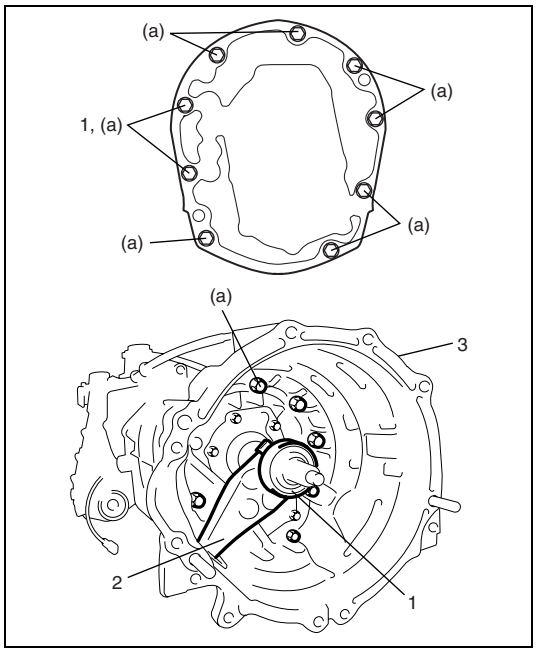

46) Install clutch housing (3) and torque its bolts to specification.

NOTE:

Use new to mounting bolts (1) as shown in figure.

Tightening torque
Clutch housing bolt
(a): 36 N·m (3.6 kg-m, 26.0 lb-ft)

47) Install clutch release fork (2) and release bearing (1).

Tightening Torque Specification

Fastening part	Tightening torque		
	N•m	kg-m	lb-ft
Transmission oil filler/level and drain plugs	37	3.7	27.0
Back-up light switch	45	4.5	32.5
Control lever locating bolt	17	1.7	12.5
Gear shift lever case plate screw	6	0.6	4.5
Interlock cam plug	19	1.9	14.0
Main and counter shaft bearing plate bolt	18	1.8	13.0
High and low speed gear shift fork bolt	20	2.0	14.5
Locating screw	19	1.9	13.5
Input shaft bearing retainer bolt	17	1.7	12.5
Rear case to intermediate case bolt	37	3.7	27.0
Return spring low/reverse bolt	37	3.7	27.0
Clutch housing bolt	36	3.6	26.0
Transmission to transfer bolt	23	2.3	17.0
Control lever boot cover bolt	15	1.5	11.0
4WD switch	20	2.0	14.5
Reverse gear shift arm bracket bolt	18	1.8	13.5

Required Service Material

Material	Recommended SUZUKI product (Part Number)	Use
Lithium grease	SUZUKI SUPER GREASE A (99000-25010)	• Oil seal lips • Gear shift lever bush • Straight pin
Thread lock cement	THREAD LOCK 1322 (99000-32110)	• Control lever locating bolts • Stopper bolts
Sealant	SUZUKI BOND NO. 1217G (99000-31260)	• Transfer oil drain plug and level/filler plug • Mating surface of transmission cases • Gear shift shaft plug

Special Tool

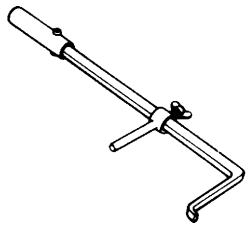 09913-50121 Oil seal remover	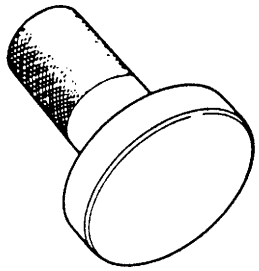 09913-75510 Bearing installer (O.D. 70.5 mm)	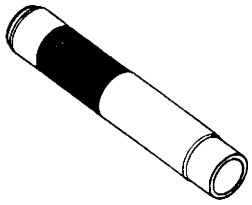 09940-51710 Bearing installer	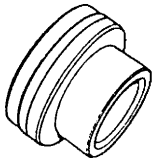 09940-54950 Bearing installer attachment
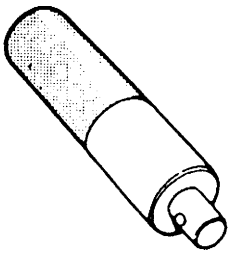 09913-75821 Installer attachment	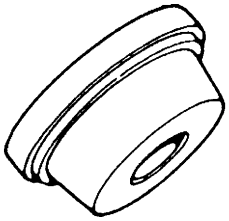 09924-84510-004 Bearing installer adapter (C)	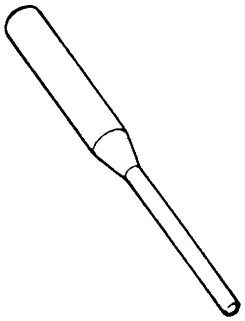 09925-78210 (6 mm) Spring pin remover	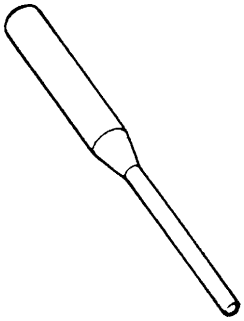 09922-85811 (4.5 mm) Spring pin remover
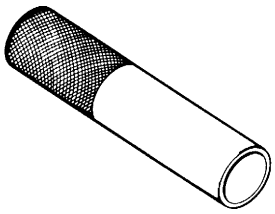 09913-84510 Bearing installer	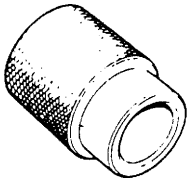 09940-53111 Bearing installer	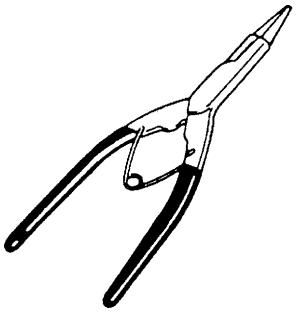 09900-06107 Snap ring pliers (opening type)	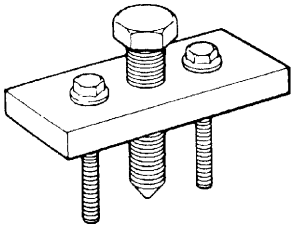 09944-36011 Steering wheel remover
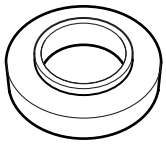 09924-07720 Synchronizer hub installer	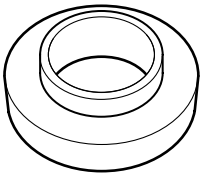 09924-07710 Synchronizer hub installer	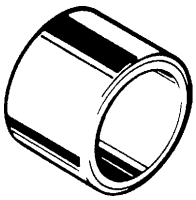 09944-78210 Bearing installer support	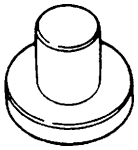 09913-85230 Bearing remover tool

SECTION 7B1

AUTOMATIC TRANSMISSION (4 A/T)

CONTENTS

General Description

When repairing automatic transmission, it is necessary to conduct the on-vehicle test to investigate where the cause of the trouble lies first.
Then whether overhaul should be done or not is determined. If the transmission is disassembled without such preliminary procedure, not only the cause of the trouble would be unknown, but also a secondary trouble may occur and often time would be wasted.

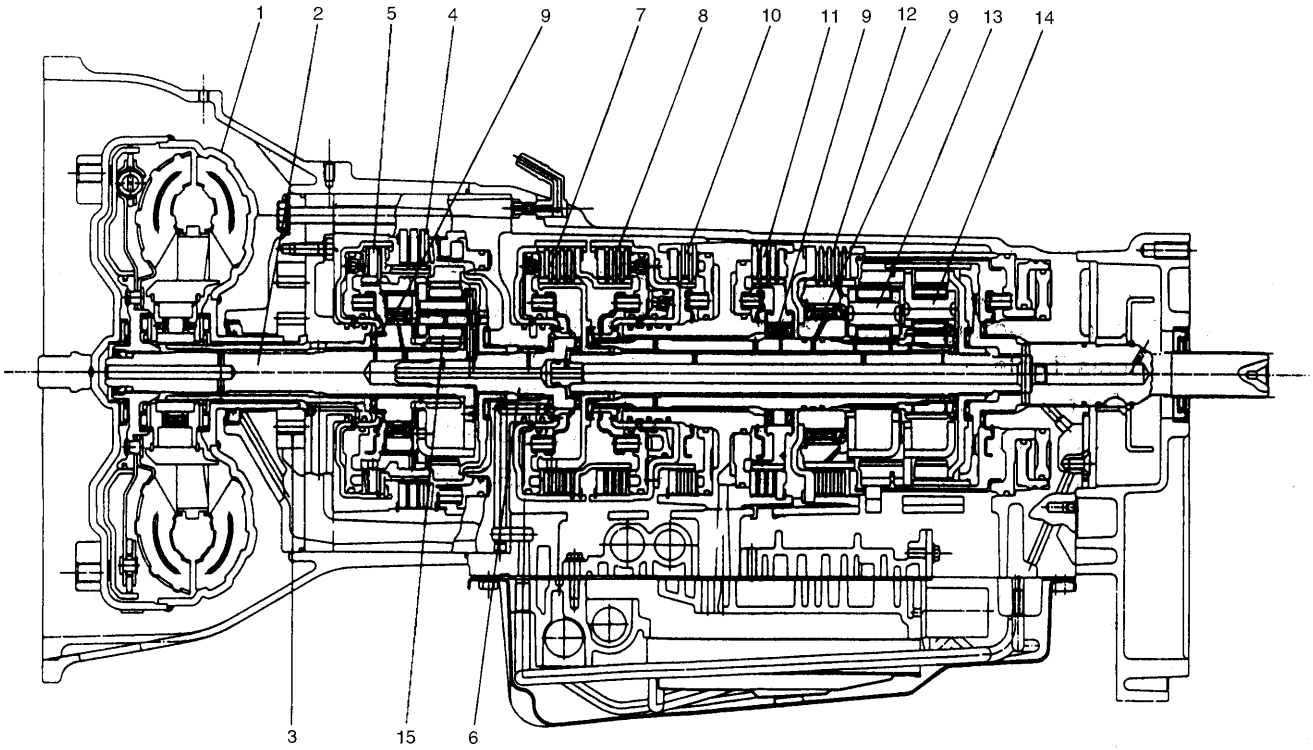

1. Torque converter	6. Forward clutch input shaft	11. Second brake
2. Overdrive input shaft	7. Forward clutch	12. Reverse brake
3. Oil pump	8. Direct clutch	13. Front planetary gear
4. Overdrive brake	9. One-way clutch	14. Rear planetary gear
5. Overdrive clutch	10. Second coast brake	15. Overdrive planetary gear

Torque Converter Diagnosis

Stator Assembly Freewheels

If the stator roller clutch becomes ineffective, the stator assembly freewheels at all times in both directions. With this condition, the vehicle tends to have poor acceleration from a standstill. If poor acceleration problems are noted, what to be checked first are that the exhaust system is not blocked, the engine is running properly and the transmission is in 1st gear when starting out.

Stator Assembly Remains Locked Up

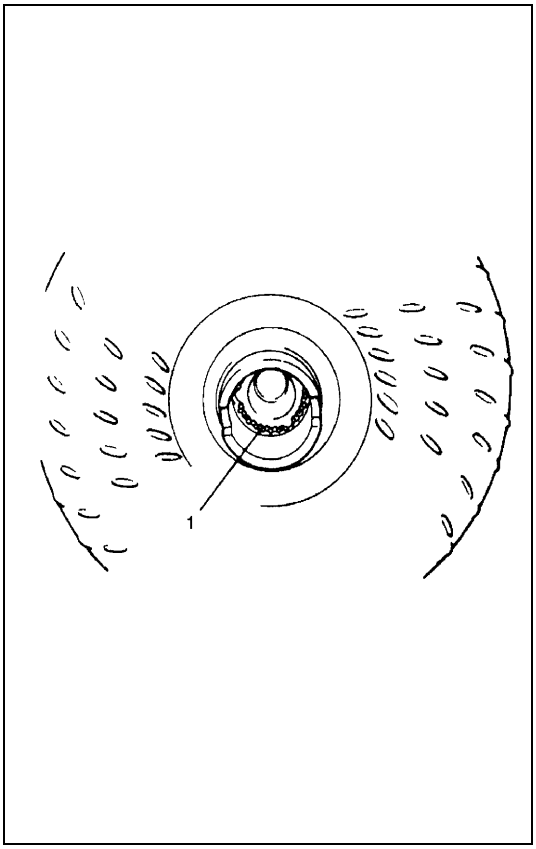

If the stator assembly remains locked up at all times, the engine rpm and vehicle speed will tend to be limited or restricted at high speeds. The vehicle performance when accelerating from a standstill will be normal. Engine overheating may be noted. Visual examination of the converter may reveal a blue color from the overheating that will result.
Under above conditions, if the converter has been removed from the transmission, the starer roller clutch can be checked by inserting a finger into the splined inner race of the roller clutch and trying to turn the race in both directions. The inner race should turn freely clockwise, but be heavy to turn counterclockwise.

NOTE:

- **Converter placed with its flange upright does not fit for this inspection.**
- **For proper checking, position converter with its flange horizontal.**
- **Turn stator inner race clockwise as quickly as possible with finger, then turn reversely at the same speed and feel difference of inertia.**

1. Stator inner race (Should turn freely clockwise only)

Do Not Replace Converter for Following Conditions:

1) The fluid has an odor, is discolored, and there is no evidence of metal particles. There is no indication of existence of internal damage, or oil pump damage. Dump out as much fluid as possible from the converter and replace only the oil pump screen in the pan.
2) A small amount of wear (sometimes referred to as fretting wear) appears on the hub where the oil pump drive gear is located. A certain amount of such wear is normal for both the hub and oil pump gear. Neither the converter nor the oil pump assembly should be replaced.

Unit Repair

Precautions

As the automatic transmission consists of high precision components, the following cautions should be strictly observed when handling its parts in disassembly and reassembly.

- Make sure to wash dirt off from the transmission so that no such dirt will enter the transmission during dismounting and remounting.
- Select a clean place free from dust and dirt for overhauling.
- Place a rubber mat on the work bench to protect parts from damage.
- Work gloves or shop cloth should not be used. (Use a nylon cloth or a paper towel.)
- When separating the case joint, do not pry with a screwdriver or such but tap with a plastic hammer lightly.
- Make sure to wash dirt off from the transmission so that no such dirt will enter the transmission during disassembly and reassembly.
- Wash the disassembled parts in ATF (Automatic Transmission Fluid) or kerosene (using care not to allow ATF or kerosene to get on your face, etc.) and confirm that each fluid passage is not clogged by blowing air into it. But use ATF to wash the disc, resin washers and rubber parts.
- Replace each gasket, oil seal and O-ring with a new one.
- Apply ATF to sliding or rotating parts before reassembly.
- A new disc should be soaked in ATF at least 2 hours before use.

Part Inspection and Correction Table

Part	Inspect for	Correction
Casted part, machined part	Small flaw, burr	Remove with oil stone.
	Deep or grooved flaw	Replace part.
	Clogged fluid passage	Clean with air or wire.
	Flaw on installing surface, residual gasket	Remove with oil stone or replace part.
	Crack	Replace part.
Bearing	Unsmooth rotation	Replace.
	Streak, pitting, flaw, crack	Replace.
Bushing, thrust washer	Flaw, burr, wear, burning	Replace.
Oil seal, gasket	Flawed or hardened seal ring	Replace.
	Worn seal ring on its periphery or side	Replace.
	Piston seal ring, oil seal, gasket, etc.	Replace.
Gear	Flaw, burr	Replace.
	Worn gear tooth	Replace.
Splined part	Burr, flaw, torsion	Correct with oil stone or replace.
Snap ring	Wear, flaw, distortion	Replace.
	No interference	Replace.
Thread	Burr	Replace.
	Damage	Replace.
Spring	Settling, sign of burning	Replace.
Clutch disc, brake disc	Wear, burning, distortion, damaged claw	Replace.
Clutch plate, brake plate	Wear, burning, distortion, damaged claw	Replace.
Sealing surface (where lip contacts)	Flaw, rough surface, stepped wear, foreign material	Replace.

Unit Disassembly

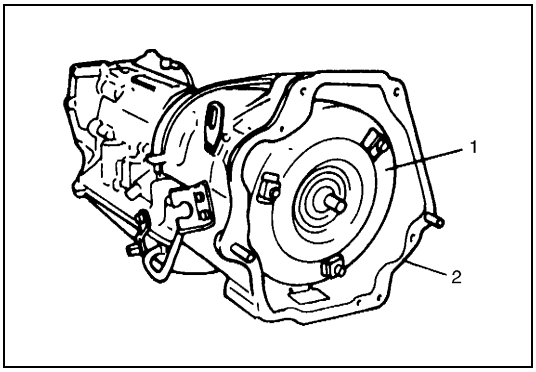

1) Extract torque converter. And remove oil filler tube and dipstick.

CAUTION:

Remove torque converter as much straight as possible. Leaning it may cause to damage oil seal lip.

1.	Torque converter
2.	Converter housing

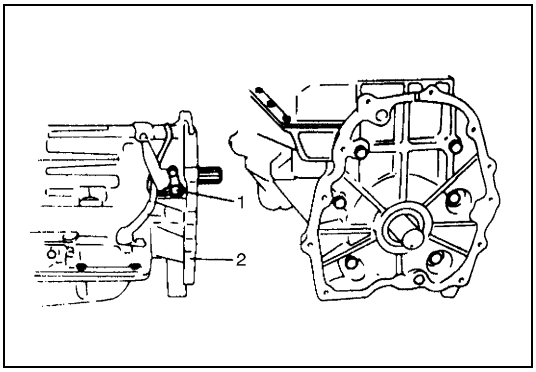

2) Remove speed sensor (1).
3) Remove 6 adapter case fixing bolts and then remove adaptor case (2).

NOTE:

Use care not to cause damage to oil seal.

4) Remove gasket.

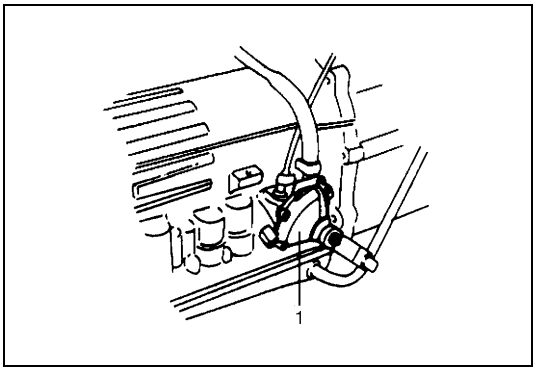

5) Remove shift switch (1).

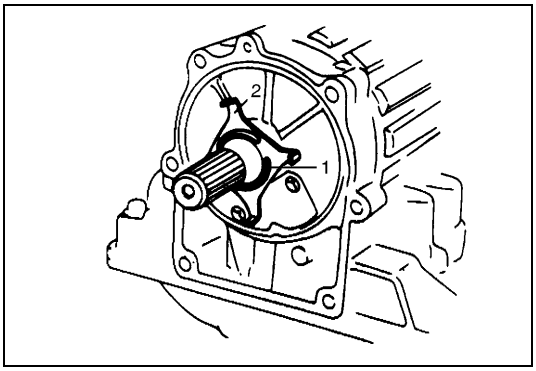

6) Remove C-ring (1) and then remove speed sensor rotor (2).

NOTE:

Use care not to loose rotor stop key.

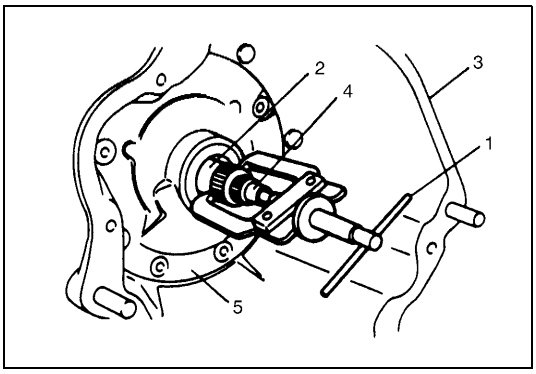

7) Remove oil pump (5) by using puller (1).

NOTE:

Use care not to cause damage to shaft bushing surface (2).

8) Remove bearing at the real of oil pump (5).
9) Remove O-ring from oil pump (5).
10) Holding input shaft (4) by hand, remove converter housing (3).

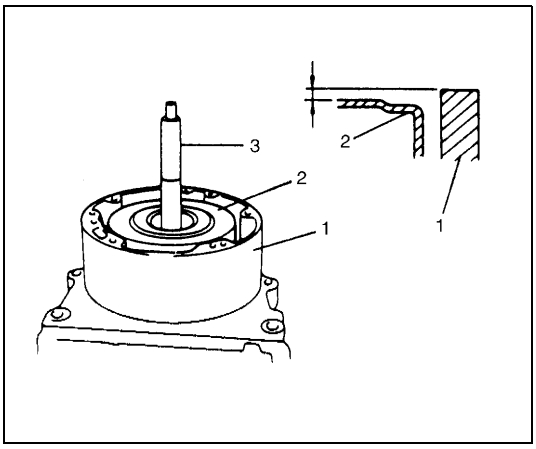

11) Check dimensions of overdrive (O/D) case surface and clutch cylinder surface for reassembly.
12) Remove overdrive (O/D) clutch assembly by holding input shaft (3).
13) Remove O/D case, bearing and bearing race.

NOTE:

Confirm direction of bearing and bearing race for reassembly.

1.	Over drive case
2.	Clutch cylinder

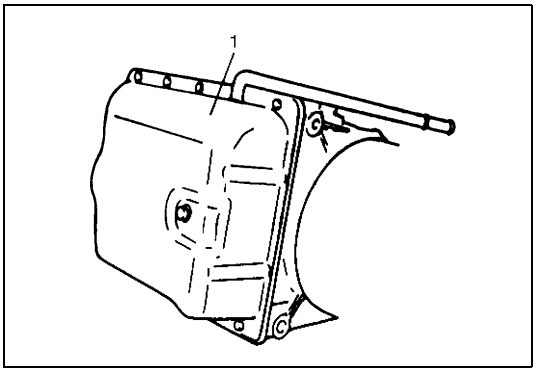

14) Remove oil pan (1).

NOTE:

- **Hold oil pan with oil pan side down to prevent foreign material in oil pan from entering valve body.**
- **If iron powder is found, it is possible that bearing, gear or clutch plate is worn.**

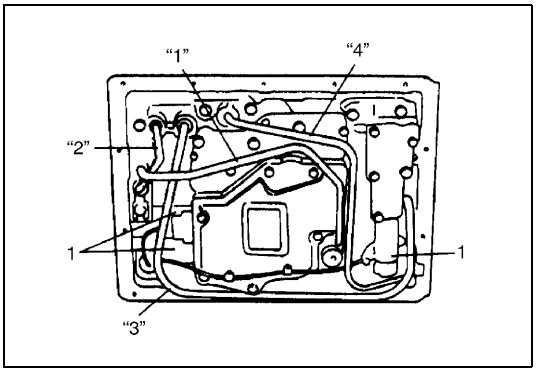

15) Remove oil tubes.

NOTE:

Refer to the figure for order of their removal.

16) Remove coupler from solenoid valve (1).

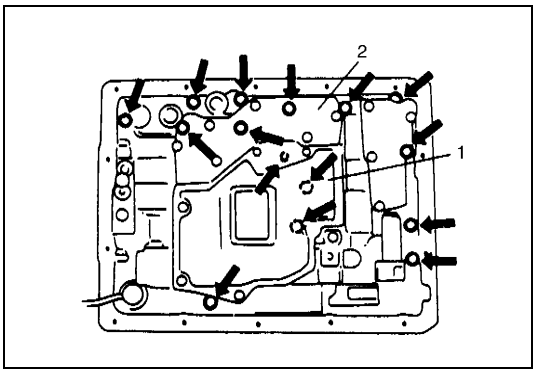

17) Remove oil strainer (1).
18) Remove valve body (2) mounting bolts as shown in the figure.

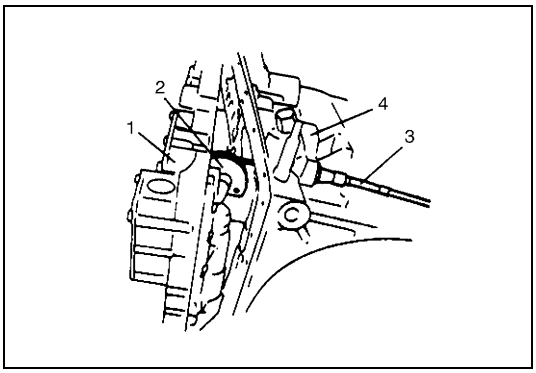

19) Lift valve body (1) and disconnect A/T throttle cable (3) from throttle cam (2). And remove valve body.
20) Disconnect throttle cable (3) from case (4).

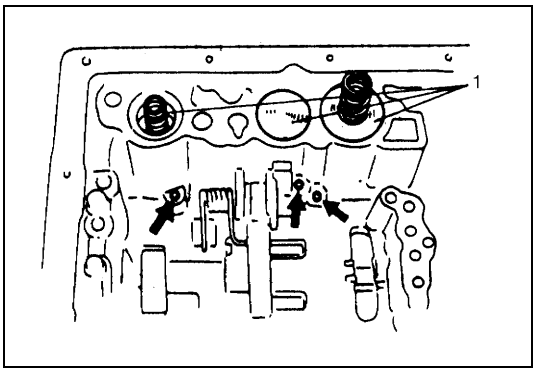

21) Remove accumulator pistons (1) by blowing air into holes indicated in the figure.

NOTE:

Hold accumulator piston (1) with shop cloth while blowing.

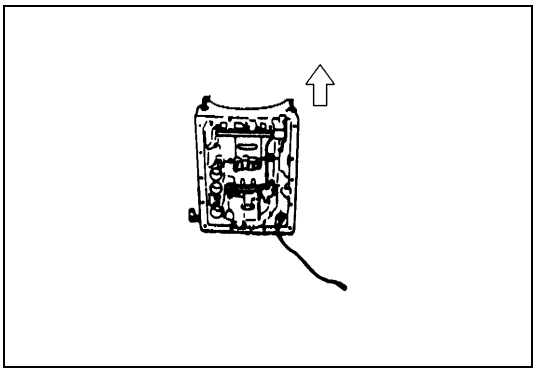

22) Place transmission upright as shown in the figure.

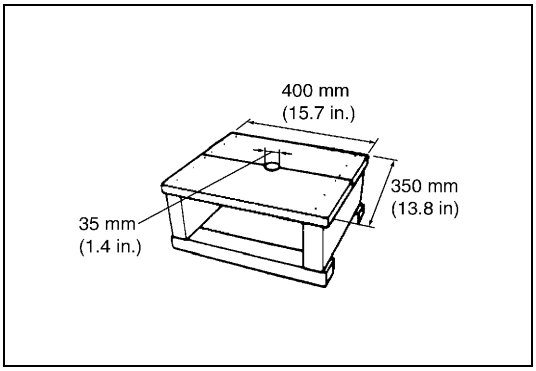

NOTE:

- **To prevent transmission case from getting damaged, protect its contacting surface with stand by using shop cloth or the like.**
- **A stand of such size as shown in the figure will facilitate work.**

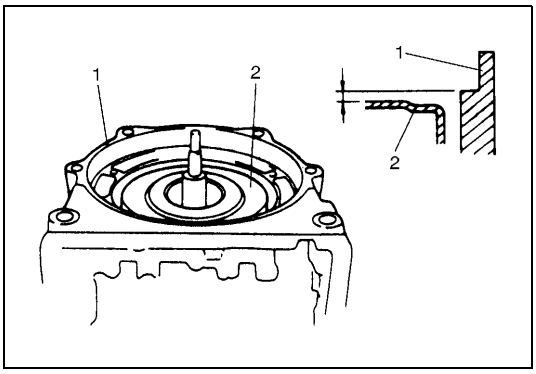

23) Check top surface level of forward clutch (2) against case (1) for reassembly.
24) Remove forward clutch.

NOTE:

Confirm direction of bearing and bearing race for reassembly.

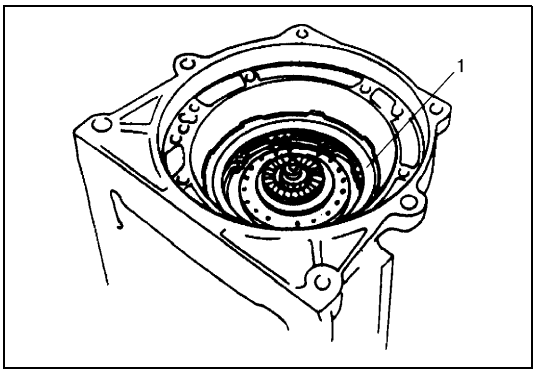

25) Remove direct clutch (1).

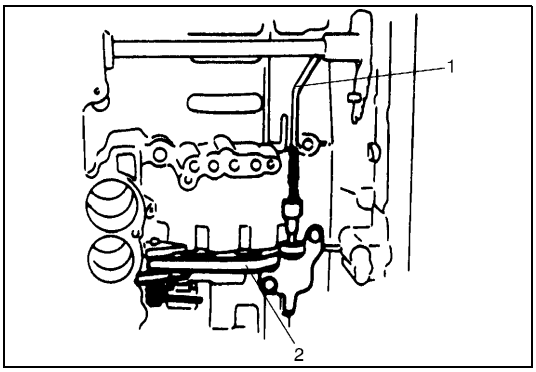

26) Remove parking rod (1) and parking pawl (2).

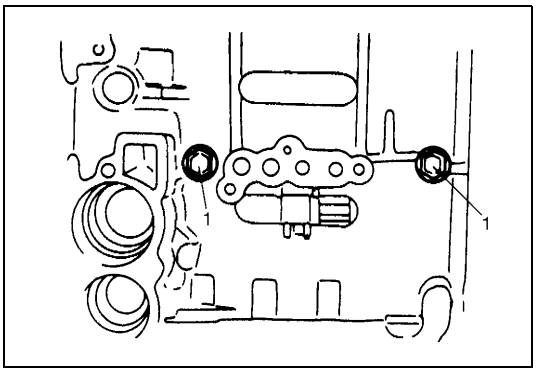

27) Remove 2 bolts (1) from valve body side to remove center support.

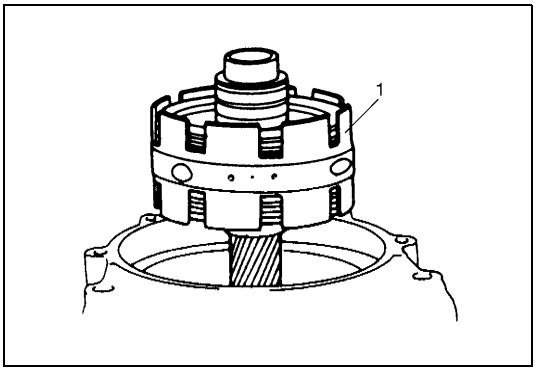

28) Remove center support assembly (1).

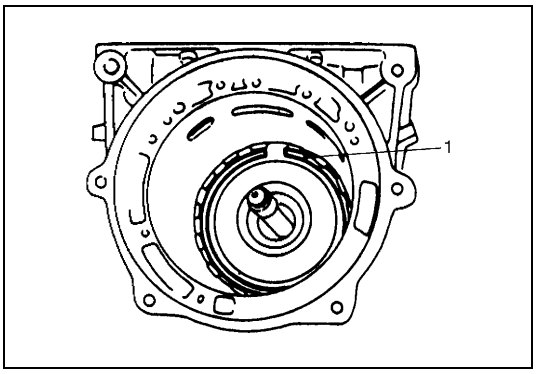

29) Remove retaining ring (1), planetary gear assembly and leaf spring.

NOTE:

- **Use care not to cause damage to case when removing retaining ring.**
- **Confirm direction of bearing and bearing race for reassembly.**

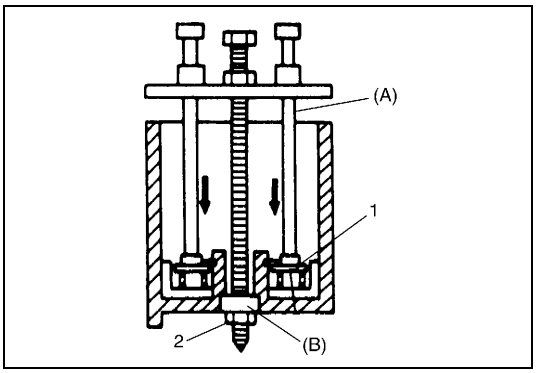

30) Remove reverse brake retainer (1).

Special tool
(A): 09941-84510
(B): 09926-98320

2. Nut M12 X 1.75

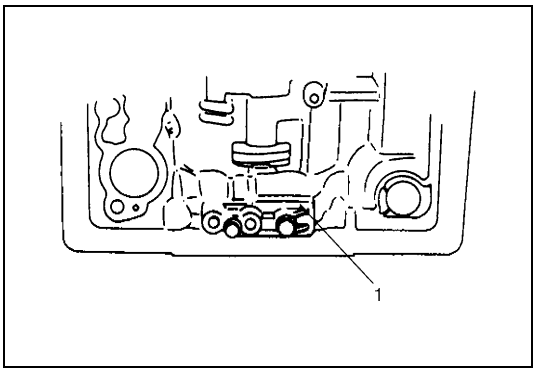

31) Remove brake applying cover (1).

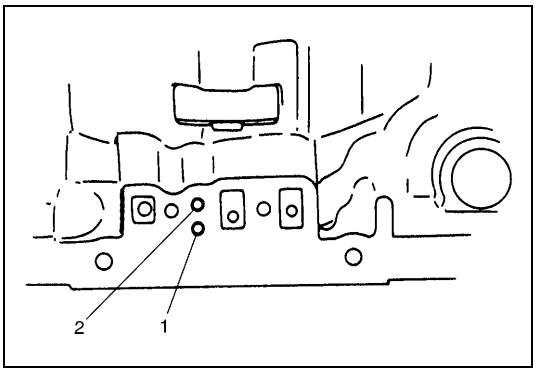

32) Remove rear action sleeve and reverse brake piston by blowing air into hole (1) with hole (2) closed.

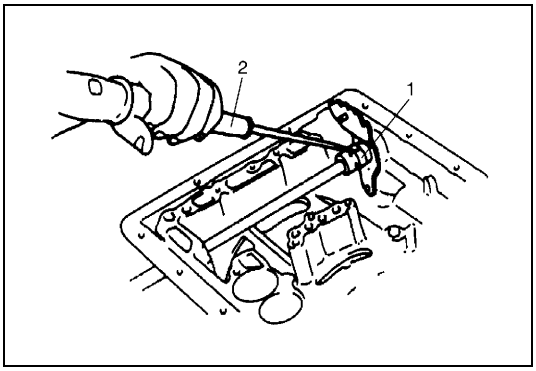

33) Undo caulking of sleeve cover (1) by using moderate stick (2) and move sleeve cover.

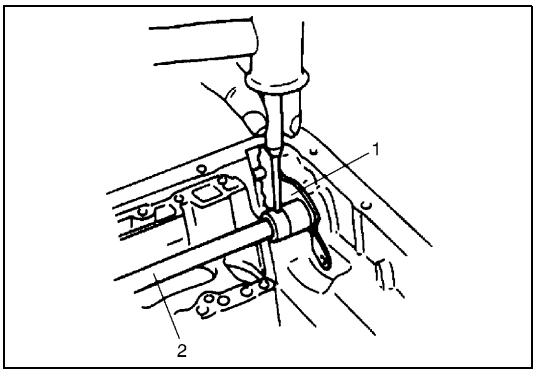

34) Using a punch, drive out manual shift lever pin, pull out manual shift shaft (2) and remove manual shift lever (1). Then remove sleeve cover from manual shift lever (1).

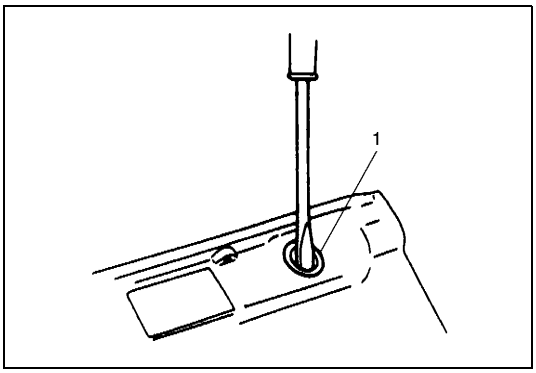

35) Remove oil seal (1) from both sides of transmission case.

Sub-Assembly Repair

Oil pump

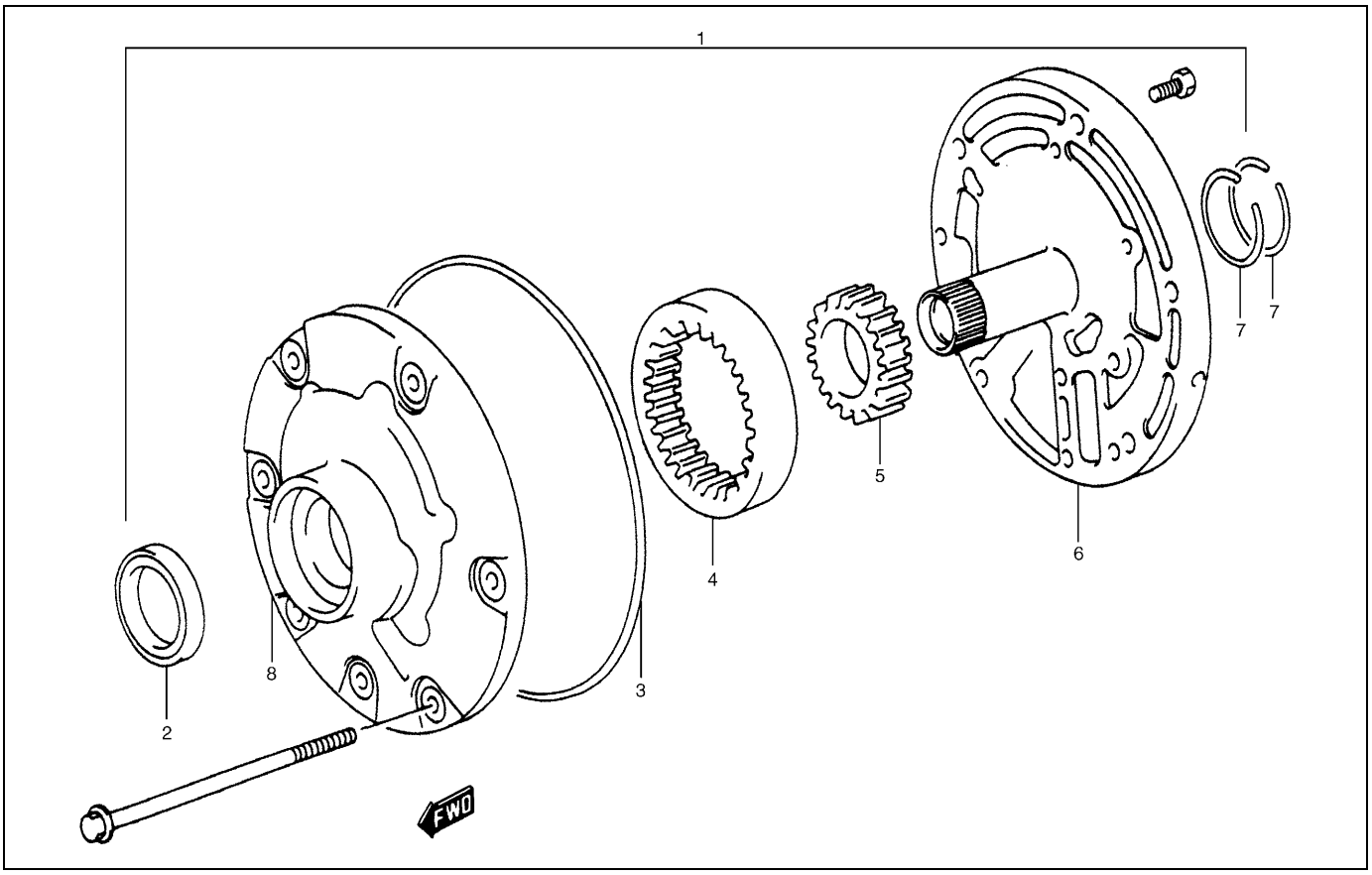

1. Oil pump assembly	3. Oil pump cover O-ring	5. Drive gear	7. Seal ring
2. Oil pump body oil seal	4. Driven gear	6. Oil pump cover	8. Oil pump body

DISASSEMBLY

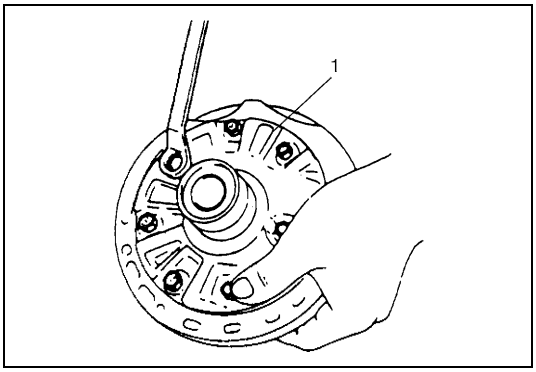

1) Remove 6 bolts, oil pump cover (1), drive gear and driven gear in that order.
2) Remove oil pump cover O-ring.

INSPECTION

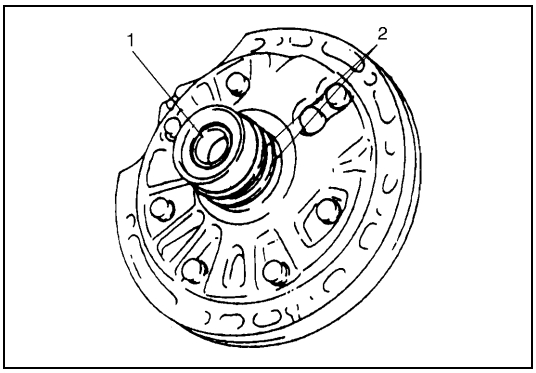

- Check seal ring (2) and bushing (1) for wear and damage.

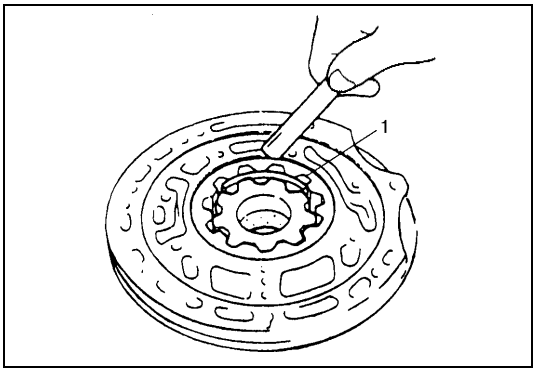

- Check clearance between outer gear (1) and body.

Clearance between outer gear and body:
Standard: 0.07 – 0.15 mm (0.0028 – 0.0059 in.)
Service limit: 0.30 mm (0.0118 in.)

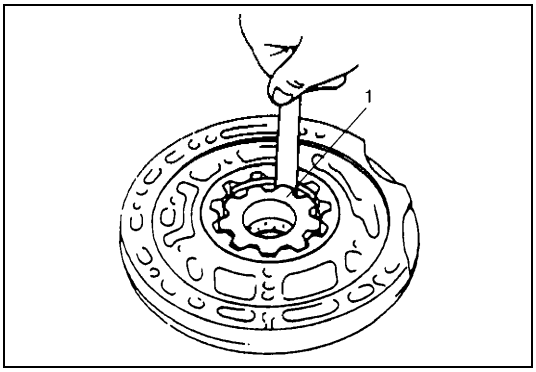

- Check tip clearance between inner gear (1) and outer gear.

Tip clearance between inner gear and outer gear
Standard: 0.11 – 0.14 mm (0.0044 – 0.0055 in.)
Service limit: 0.30 mm (0.01181 in.)

NOTE:

Measure with torque converter installed.

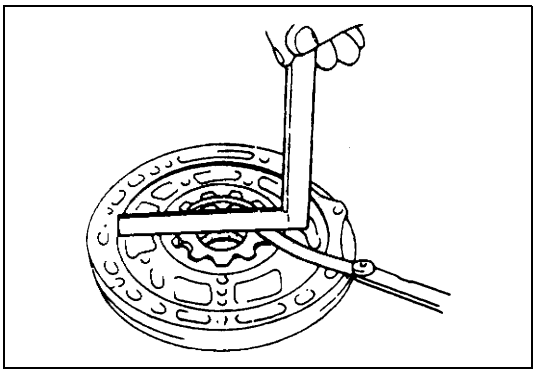

- Check side clearance between inner gear/outer gear and pump body.

Side clearance between inner gear/outer gear and pump body:
Standard: 0.02 – 0.05 mm (0.0008 – 0.0019 in.)
Service limit: 0.1 mm (0.0039 in.)

ASSEMBLY

Assemble each component by reversing removal procedure and noting following points.

- Before installing inner gear and outer gear to pump body, apply A/T fluid to them.

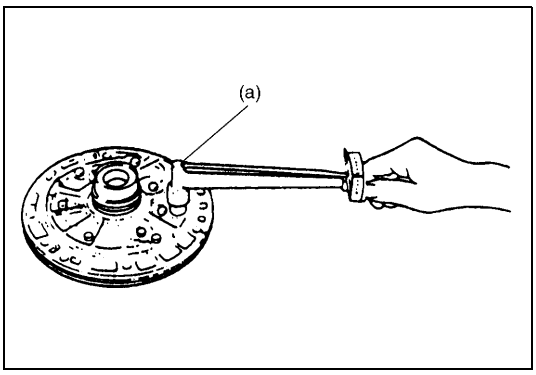

- When installing pump cover, use care so that its splined part will not cause damage to oil seal and use specified torque to tighten it to pump body.

Tightening torque
Oil pump bolt (a): 7.5 N·m (0.75 kg-m, 5.5 lb-ft)

- When installing O-ring and oil seal, apply enough A/T fluid to them and fit them securely in groove.
- After installation, check that inner gear turns smoothly by making use of torque converter.
- When installing seal ring, it should not be opened more than necessary.
- Fit claws of seal ring securely.

Overdrive (Planetary gear side)

1. Bearing	5. O-ring	9. Clutch backing plate	13. One-way clutch
2. Race	6. Return spring	10. Clutch disc	14. Thrust washer
3. Clutch cylinder	7. Snap ring	11. Retaining ring	15. O/D planetary gear
4. Clutch piston	8. Cushion clutch plate	12. Brake hub	

DISASSEMBLY

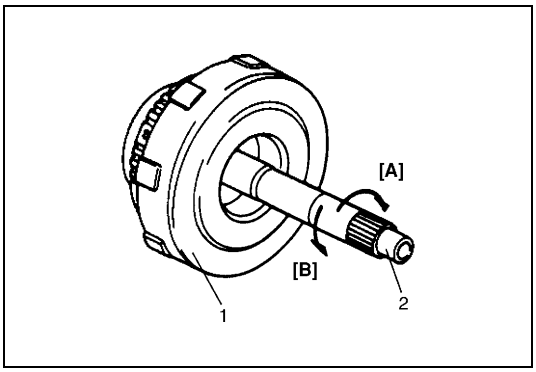

1) With overdrive (O/D) clutch cylinder (1) held stationary, turn O/D input shaft (2) clockwise to check that it turns smoothly and then counterclockwise to check that it locks.

[A]:	Rotates
[B]:	Locks

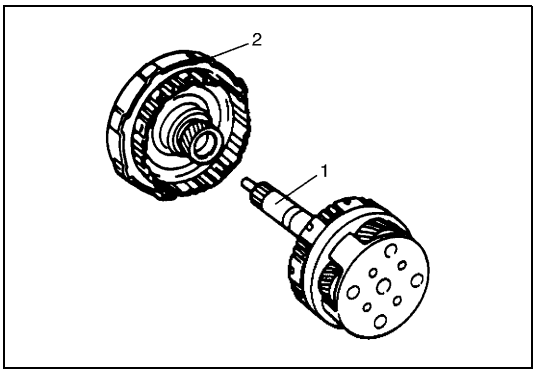

2) Remove O/D planetary gear assembly (1).

2. O/D clutch cylinder

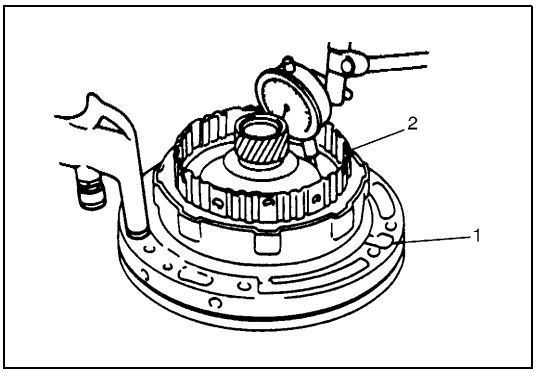

3) With O/D clutch assembly (2) installed to oil pump (1), apply 4 to 8 kg/cm^2 air pressure into fluid hole in oil pump and measure stroke of clutch piston. If it is not within standard range, replace cushion clutch plate or clutch disc.

Standard stroke of clutch piston:
Standard: 1.47 – 2.28 mm (0.058 – 0.089 in.)

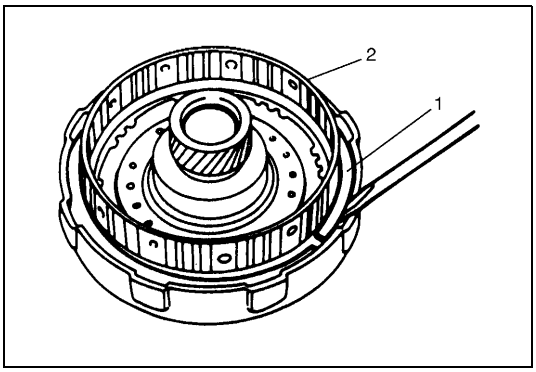

4) Remove retaining ring (1) and then remove brake hub (2).

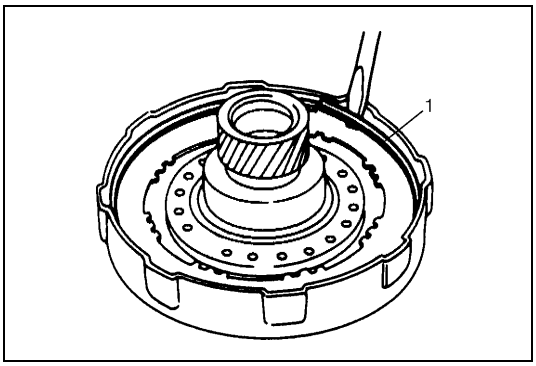

5) Remove retaining clutch ring (1), cushion plate, backing plate and clutch disc in that order.

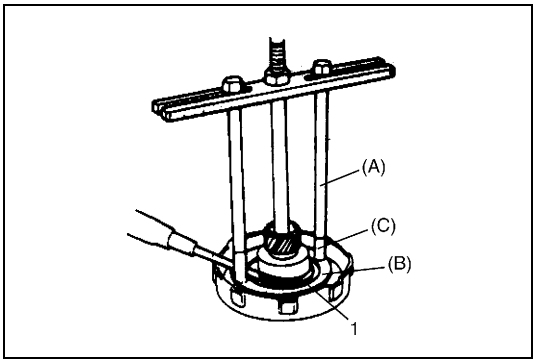

6) With clutch piston return spring compressed with special tools, remove clutch piston return spring.

Special tool
(A): 09918-48211
(B): 09926-98320
(C): 09918-48220

1. Snap ring

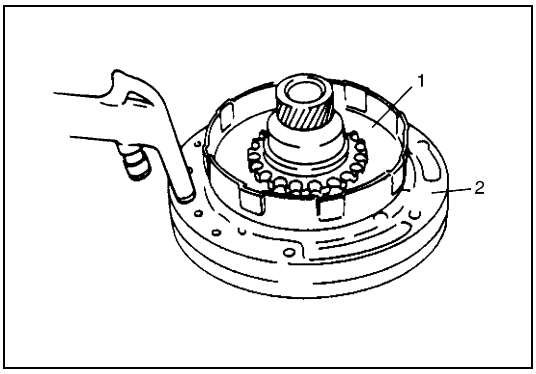

7) Install O/D clutch cylinder to oil pump (2). Apply compression air into fluid hole in oil pump (2) and remove clutch piston (1).
8) Remove piston inner O-ring and piston outer O-ring from clutch piston (1).

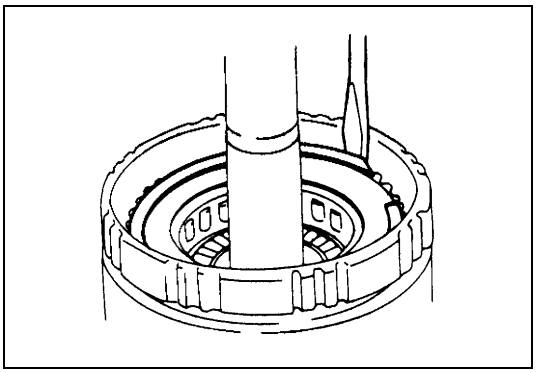

9) Remove retaining ring from O/D planetary gear and then remove one-way clutch, thrust planetary washer and thrust bearing.

INSPECTION

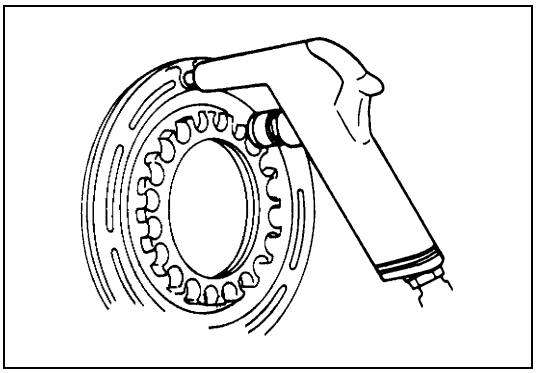

- Check that ball valve of clutch piston is not stuck.
- Check valve for leakage by applying low pressure air into ball valve hale.

ASSEMBLY

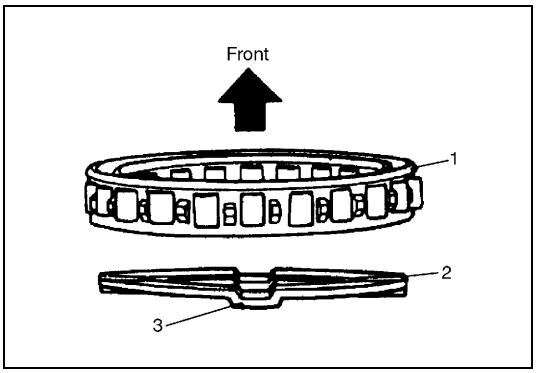

Assemble each component by reversing removal procedure and noting the following points.

- When installing thrust washer (1), bring its oil groove (3) to the front.
- When installing one-way clutch to one-way clutch outer race, bring its flange (2) to the front.

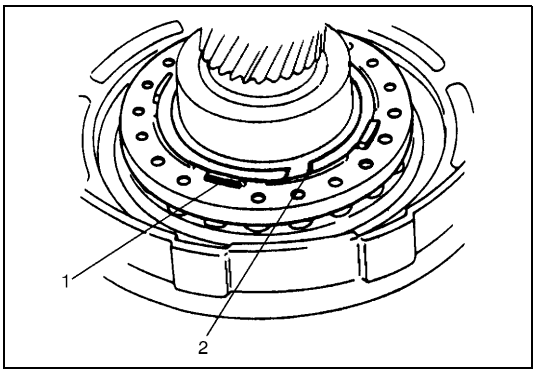

- Before installing piston inner O-ring and piston outer O-ring, apply A/T fluid to them.
- Install so that snap opening and projection (1) of clutch piston return spring will not match.

2. Slot

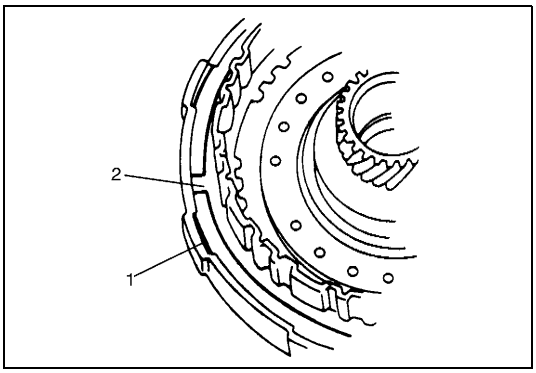

- Install retaining clutch ring and retaining brake hub so that their slots (2) will not match with dent (1) in O/D clutch cylinder.

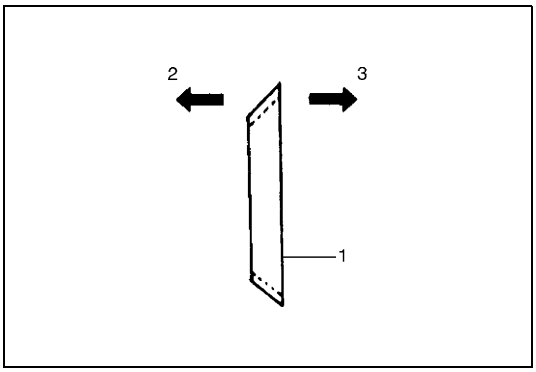

- For installing cushion clutch plate (1), refer to the figure.

2. Clutch cylinder side
3. Brake hub side

Overdrive (Case side)

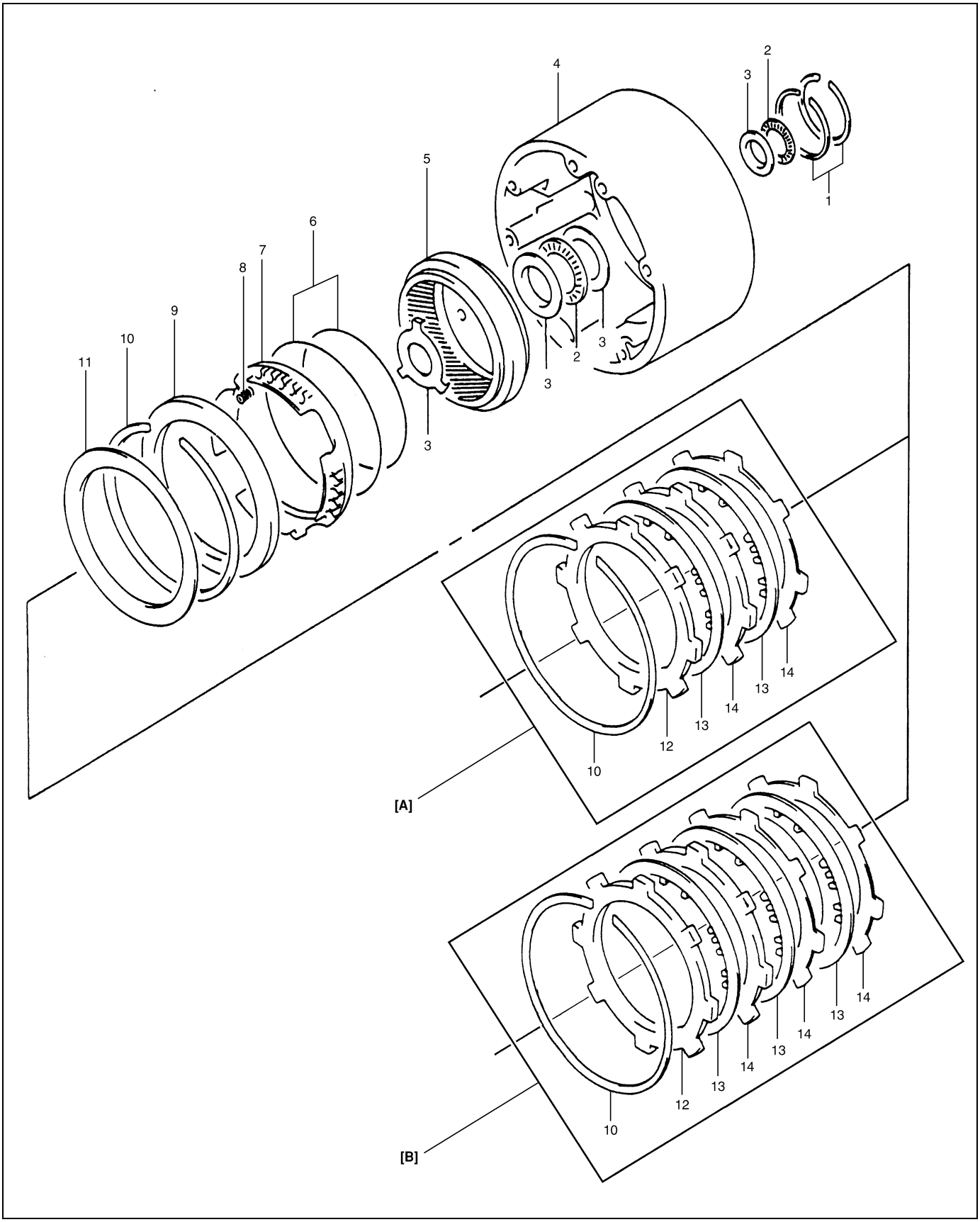

[A]: [G16 and J20 engines]	3. Bearing race	7. Brake piston	11. Cushion plate
[B]: [H25 engine]	4. O/D case	8. Return spring	12. Brake backing plate
1. Sealing	5. Planetary ring gear	9. Retainer	13. Brake disc
2. Bearing	6. O-ring	10. Retaining ring	14. Brake plate

DISASSEMBLY

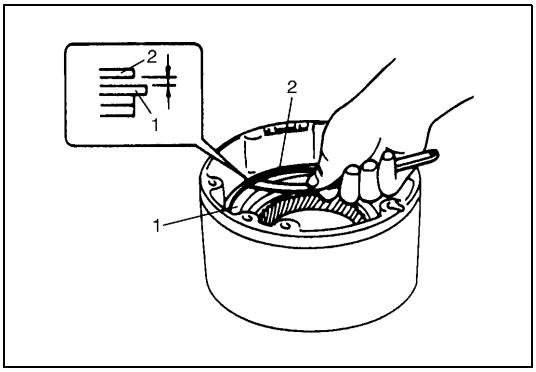

1) Measure clearance between retaining ring (1) and brake backing plate (2) with thickness gauge.
   If it is not within standard range, replace brake disc or brake plate.

Clearance between retaining ring and brake backing plate
Standard:
0.56 – 1.38 mm (0.022 – 0.054 in.) (G16 and J20 engines)
0.40 – 1.38 mm (0.016 – 0.054 in.) (H25 engine)

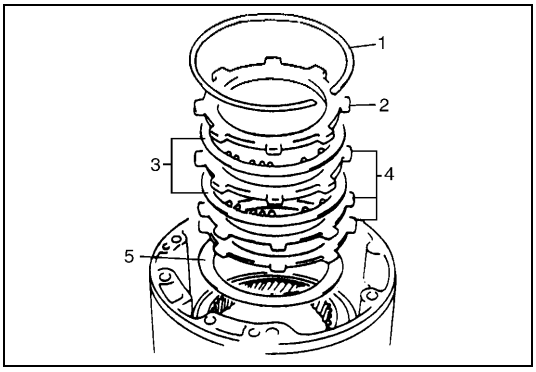

2) Remove retaining ring (1), brake backing plate (2), brake disc (3), brake plate (4), cushion brake plate (5) in that order. Then remove planetary ring gear, thrust bearing race and thrust rear bearing.

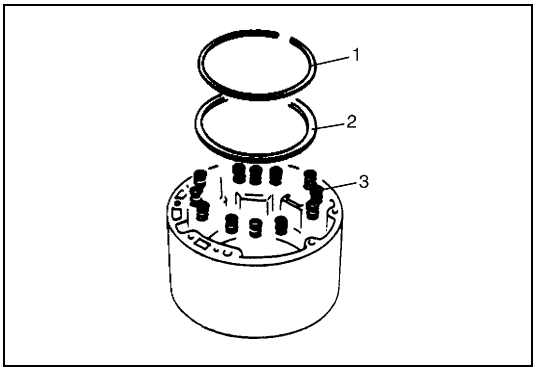

3) Remove retaining ring (1), retainer (2) and piston return spring (3).

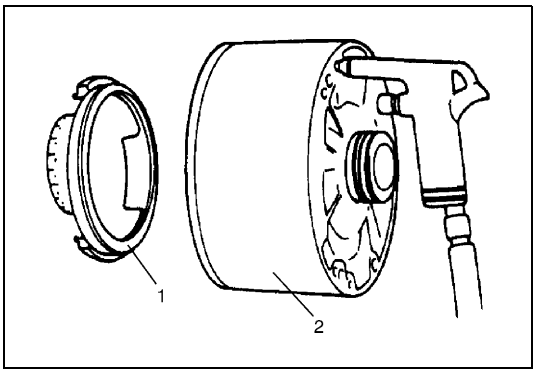

4) Blow air into fluid hole in O/D case (2) and remove brake piston (1).
5) Remove brake piston inner ring and brake piston outer ring from brake piston.

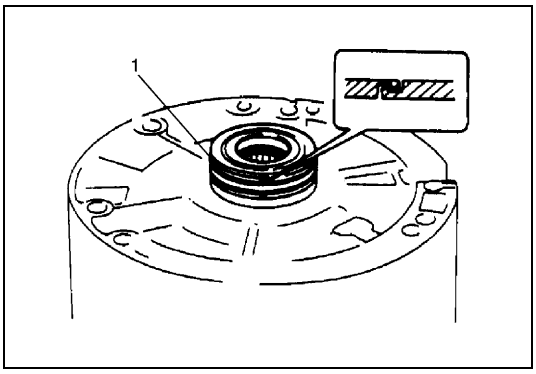

6) Unsnap seal ring (1).
7) Remove 2 seal rings (1).

NOTE:

Be careful not to open seal ring more than necessary.

INSPECTION

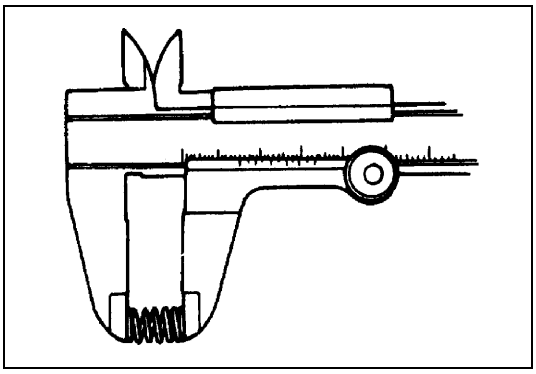

- Measure free length of piston return spring.

Standard free length of piston return spring:
16.12 mm (0.635 in.) (J20 engine)
15.10 mm (0.594 in.) (G16 and H25 engines)

ASSEMBLY

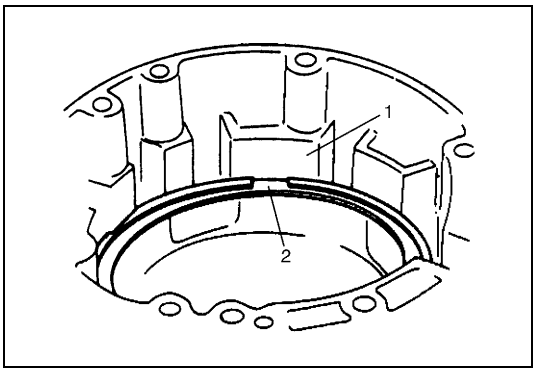

Install each component by reversing removal procedure and noting the following points.

- When installing rear seal ring, use care not to open it too wide.
- Apply A/T fluid to O-ring, disc, etc. before installing them.
- Opening of retaining brake front ring (2) and projection (1) of O/D case should be matched.
- When installing each component, refer to the first figure of “OVER DRIVE (CASE SIDE)” in this section.

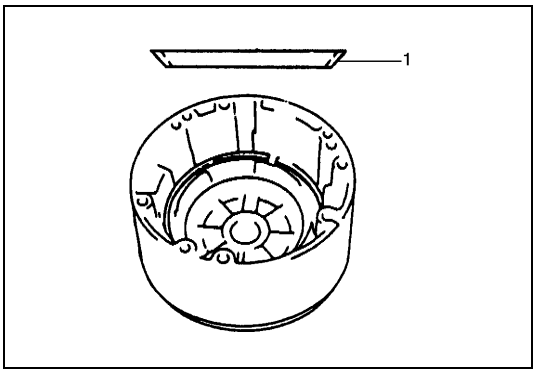

- Install cushion brake plate (1) so that it warps convexly.
- As a final step, measure clearance between retaining brake front ring and brake backing plate again.

Standard clearance between retaining brake front ring and brake backing plate:
0.56 – 1.38 mm (0.022 – 0.054 in.) (G16 and J20 engines)
0.40 – 1.38 mm (0.016 – 0.054 in.) (H25 engine)

Forward clutch

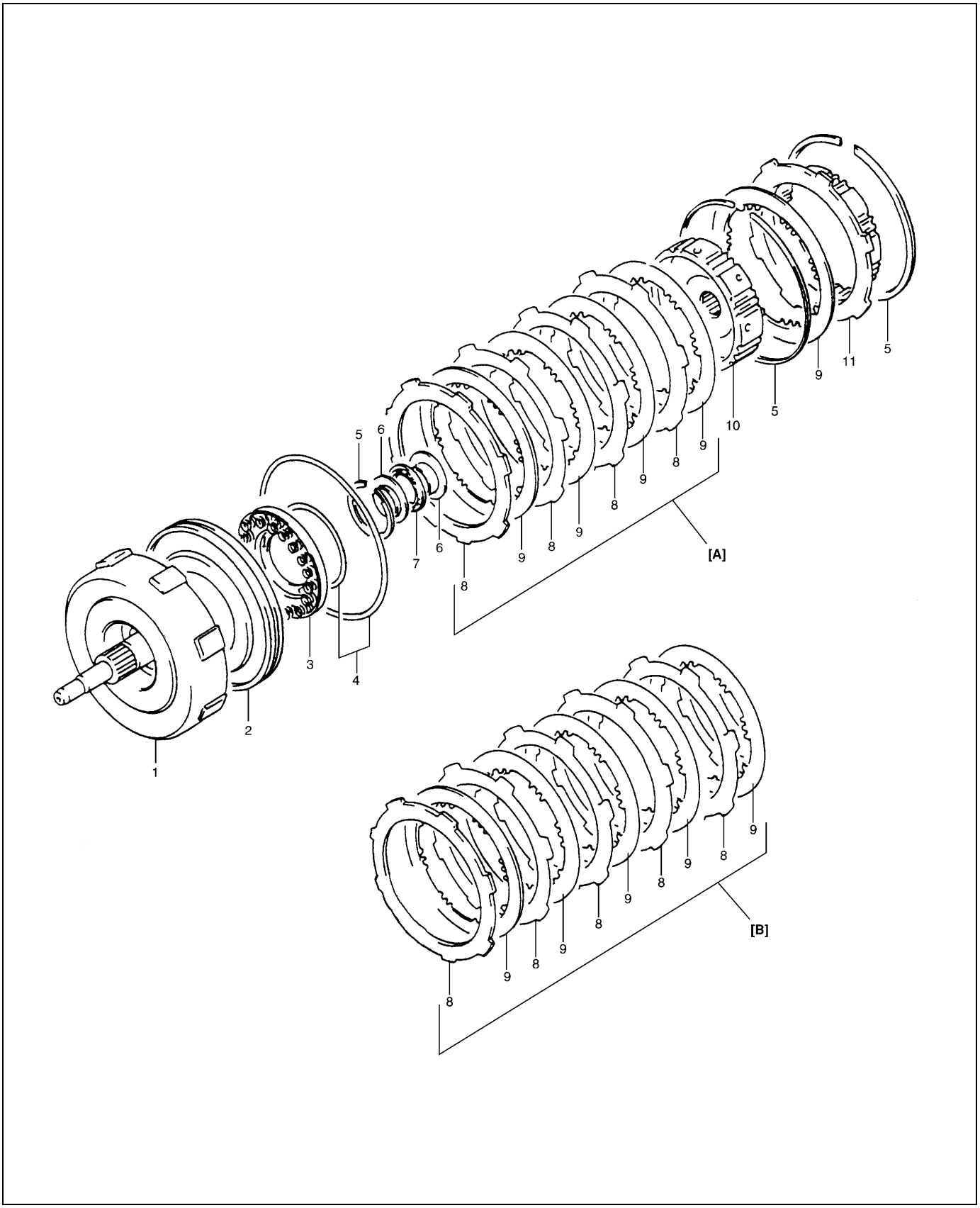

[A]: [J20 engine]	4. O-ring	9. Clutch disc
[B]: [G16 and H25 engines]	5. Retaining ring	10. Froward clutch hub
1. Input shaft	6. Bearing race	11. Direct clutch input hub
2. Piston	7. Bearing	
3. Return spring	8. Clutch plate	

DISASSEMBLY

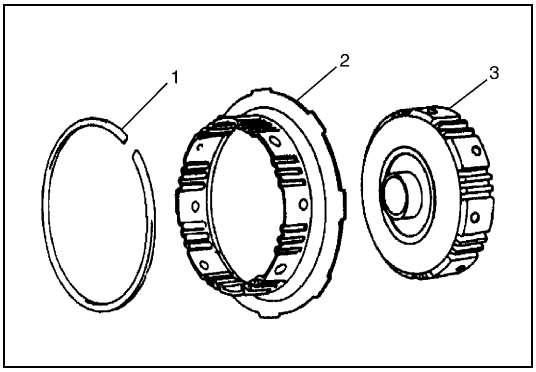

1) After removing retaining ring (1), remove direct clutch input hub (2) and forward clutch hub (3).

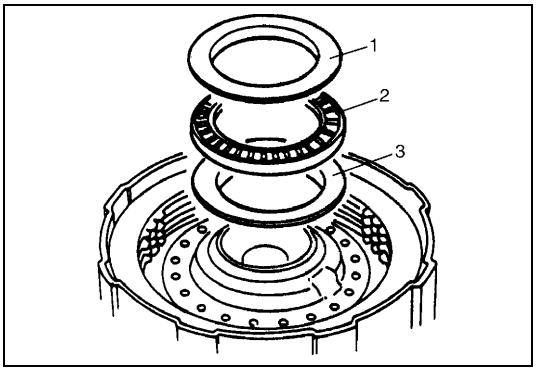

2) Remove bearing race and thrust bearing.

1.	Thrust bearing No. 2
2.	Thrust forward clutch bearing
3.	Thrust rear race

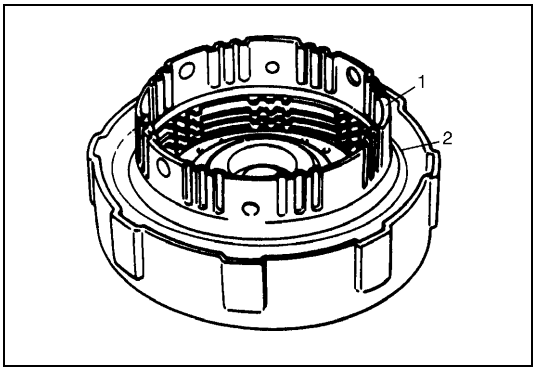

3) Install direct clutch input hub (1) and retaining ring (2).

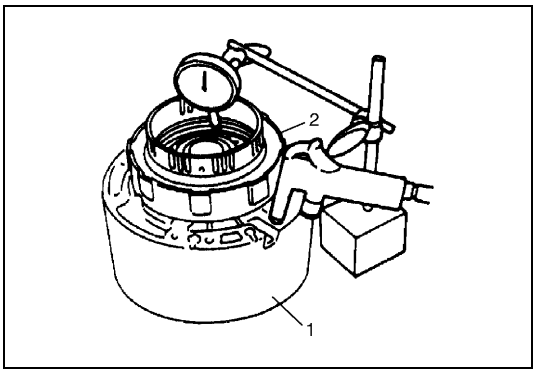

4) Install forward clutch (2) to O/D case (1). Apply 4 – 8 kg/cm^2 air pressure into fluid hole at the right of cut in O/D case and measure movement of forward clutch piston.
   If measured value is not within standard range, use either 1.8 mm (0.071 in.) or 2.0 mm (0.079 in.) clutch disc to adjust it to standard value.

Standard forward clutch piston movement:
1.40 – 2.24 mm (0.056 – 0.088 in.)

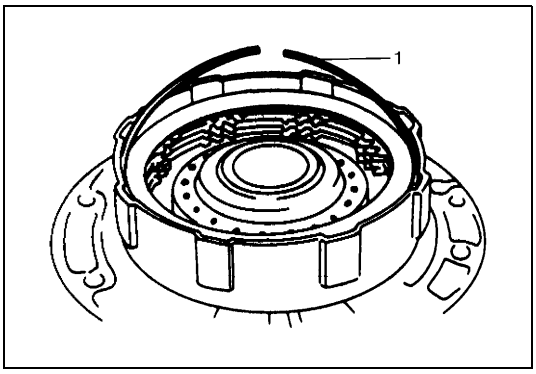

5) Remove retaining ring (1) and then remove direct clutch input hub.
6) Remove retaining ring and then remove all clutch discs.

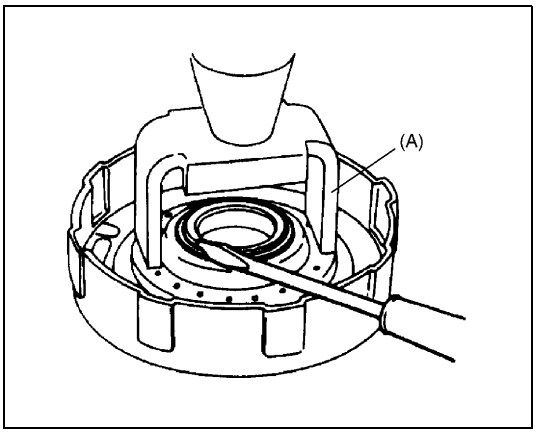

7) Using special tool and hydraulic press, compress forward clutch piston return spring and remove retaining return spring.

Special tool
(A): 09926-98310

CAUTION:
Be careful when applying pressure, for overpressure will cause plate section of piston return spring to deform.

8) Remove forward clutch piston return spring.

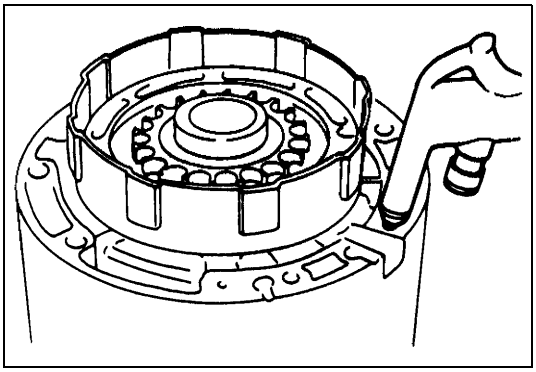

9) Install forward clutch to O/D case. Blow low pressure air into fluid hole at the right of cut in O/D case to remove forward clutch piston.

INSPECTION

Forward Clutch Piston

- Shake piston to check that ball is not stuck.
- Blow low pressure air to check ball section for leakage.

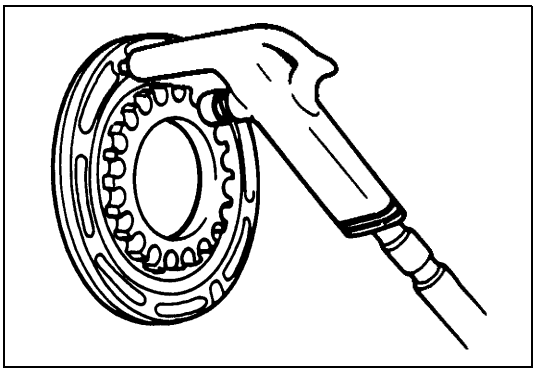

Forward Clutch Piston Return Spring

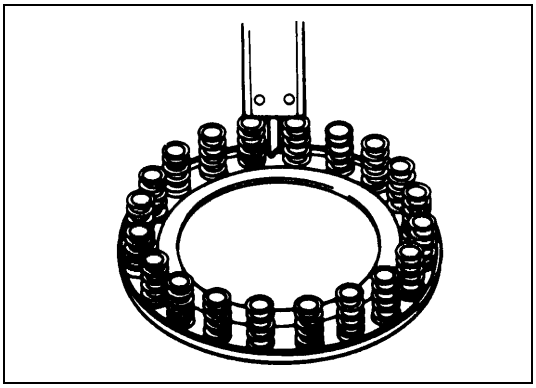

- Measure free length.

Standard free length of forward clutch piston return spring:
15.13 mm (0.596 in.)

INSTALLATION

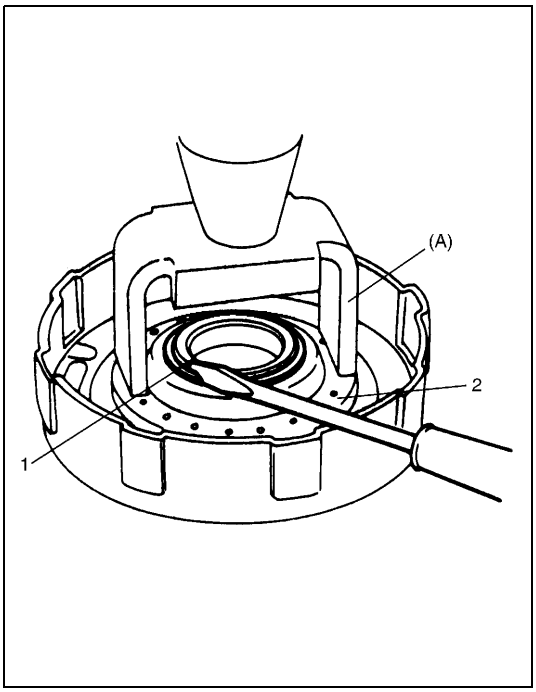

1) Apply A/T fluid to forward input shaft O-rings, install forward clutch piston and piston return spring (2) to forward input shaft and then install return spring ring with special tool and hydraulic press.

Special tool
(A): 09926-98310

NOTE:

- **When installing return spring (2), be careful so that return spring (2) will not fall or tilt.**
- **Do not align opening in retaining ring (1) with lug of forward clutch piston return spring (2) at its retainer section.**

CAUTION:
Be careful when applying pressure, for overpressure will cause plate section of piston return spring to deform.

2) Install clutch discs from the thinnest one to thicker ones to piston side and then install retaining clutch ring.

NOTE:

- **Refer to the first figure of "FORWARD CLUTCH" in this section when installing each component.**
- **Do not match opening in retaining clutch ring and dent in forward clutch input shaft.**

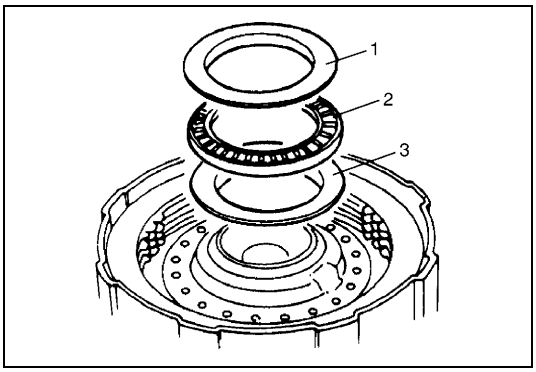

3) Install bearing races and thrust bearing.

1.	Thrust bearing No. 2 race
2.	Thrust forward clutch bearing
3.	Thrust rear race

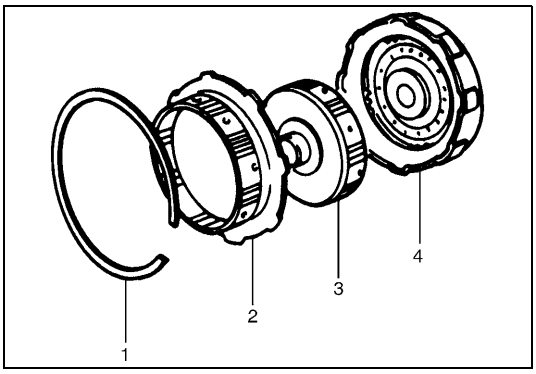

4) Install forward clutch hub (3), direct clutch hub (2) and retaining ring (1) to input shaft (4) in that order.

Direct clutch

1. Bearing race	5. Clutch disc	9. Direct clutch piston
2. Bearing	6. Clutch plate	10. Direct clutch inner piston
3. Retaining ring	7. Return spring	11. Direct clutch cylinder
4. Clutch backing plate	8. O-ring	

DISASSEMBLY

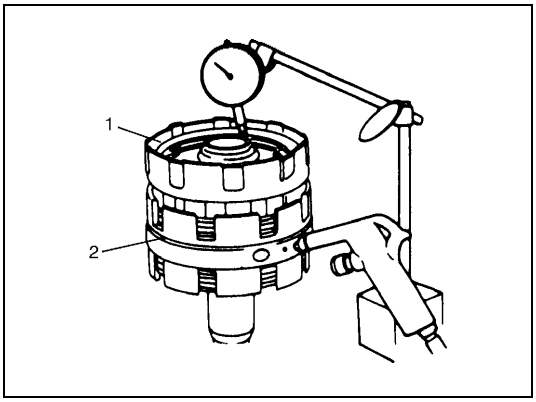

1) Install direct clutch assembly (1) to center support (2) and with 4 – 8 kg/cm^2 air pressure applied to second fluid hole from the left, measure stroke of direct clutch piston as shown in figure.
   If it is not within standard range, use 3.55 mm, 3.75 mm or 4.0 mm (0.140 in., 0.147 in. or 0.157 in.) clutch backing plate to adjust it to standard stroke.

Standard direct clutch piston stroke:
1.06 – 2.14 mm (0.042 – 0.084 in.) (G16 and J20 engines)
0.91 – 1.99 mm (0.036 – 0.078 in.) (H25 engine)

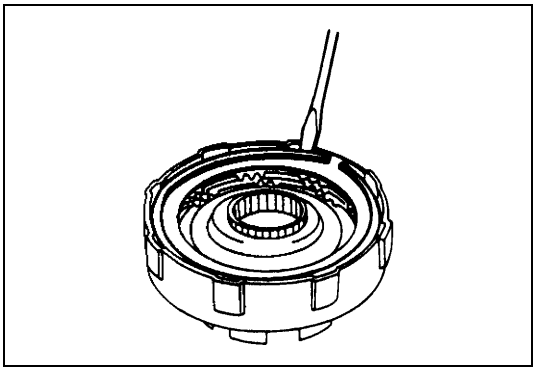

2) Remove direct clutch assembly from center support and then remove retaining ring.

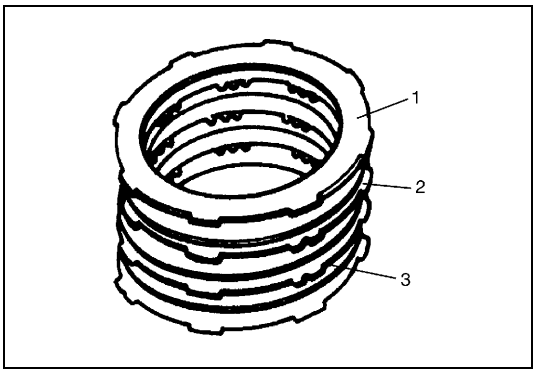

3) Remove clutch backing plate (1) and then remove clutch disc (3) and clutch plate (2).

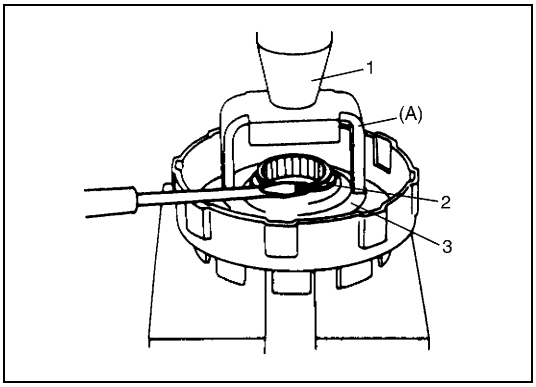

4) Using special tool and hydraulic press (1), compress direct clutch piston return spring (3) and remove retaining return spring ring (2).

Special tool
(A): 09926-98310

CAUTION:
Be careful when applying pressure, for overpressure will cause plate section of piston return spring to deform.

5) Remove direct clutch piston return spring.

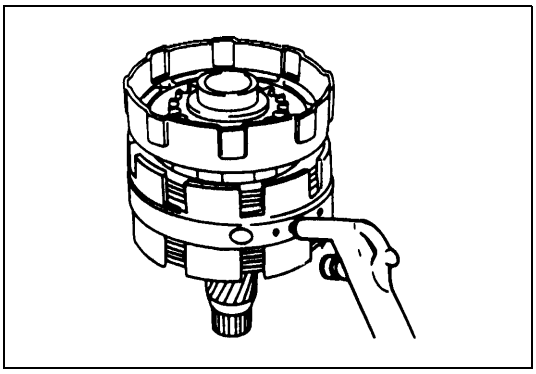

6) Install direct clutch cylinder to center support.
   Remove direct clutch piston by blowing air into the second hole from the left as shown in the figure. Also, remove direct clutch inner piston by blowing air into hole at the extreme right. And then remove O-rings from pistons.

INSPECTION

Direct Clutch Piston Return Spring

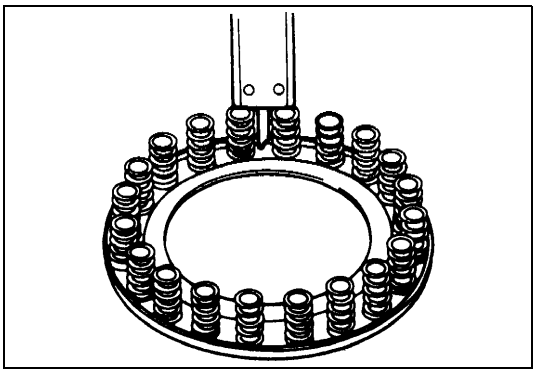

- Measure free length.

Standard free length of direct clutch piston return spring: 15.13 mm (0.595 in.)

Direct Clutch Piston

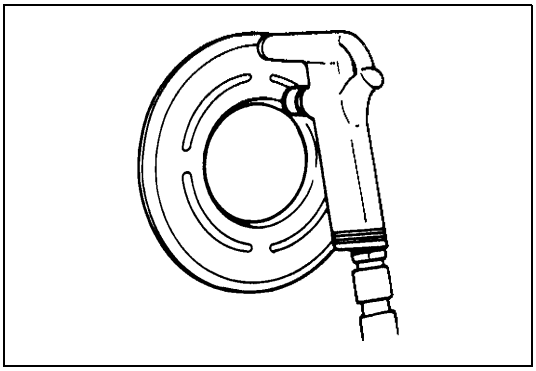

- Shake piston to check that ball is not stuck.
- Apply air pressure and check that there is no leakage.

ASSEMBLY

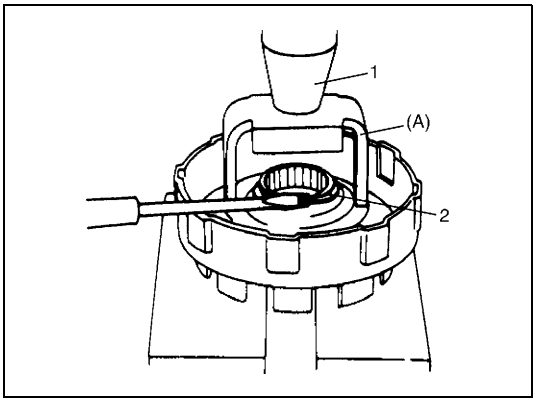

Assemble each component by reversing disassembly procedure and noting the following points.

- Always use new O-ring and apply A/T fluid before installation.
- Do not align opening in retaining ring (2) with lug of direct clutch piston return spring at retainer.

Special tool
(A): 09926-98310

1. Press

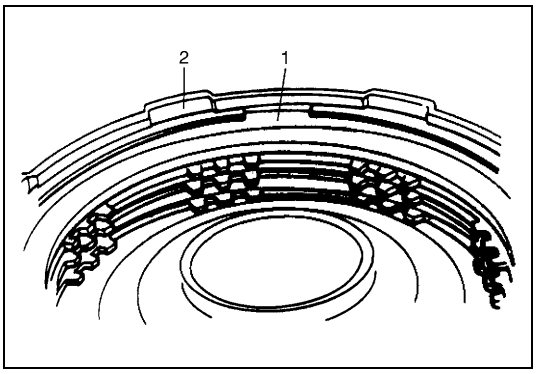

- Use care so that direct clutch piston return spring will not fall or tilt.

CAUTION:

Be careful when applying pressure, for overpressure will cause plate section of piston return spring to deform.

- Do not match opening (1) in retaining back plate ring with cutout (2) in direct clutch cylinder.

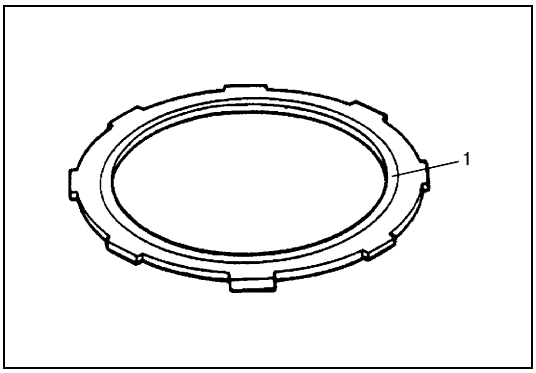

- Install clutch backing plate with its grooved side facing the front.

1. Groove

Center support

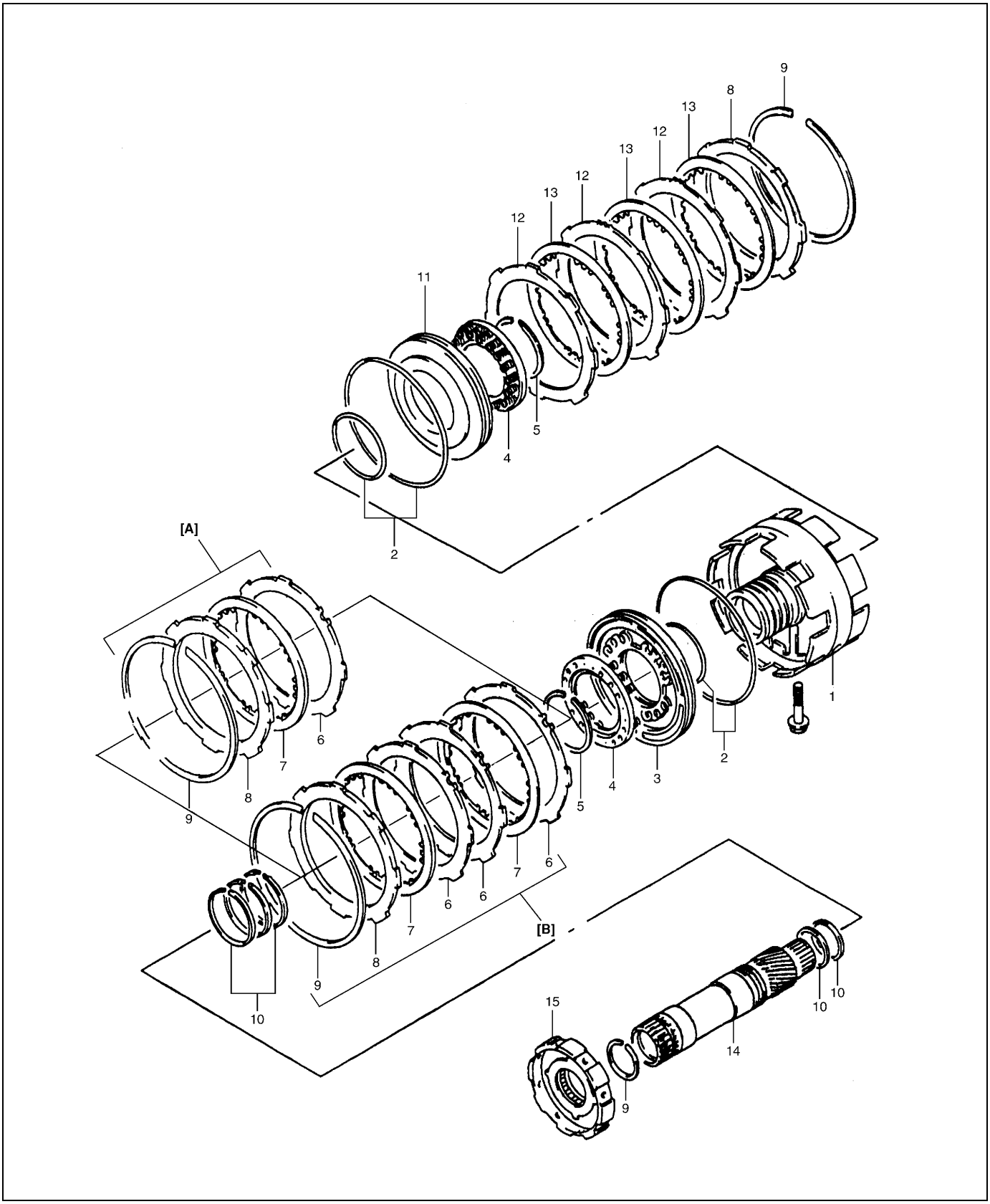

[A]: [G16 and J20 engines]	4. Piston return spring	9. Retaining ring	14. Planetary sun gear
[B]: [H25 engine]	5. Snap ring	10. Seal ring	15. B2 brake hub assembly
1. Center support	6. B1 brake plate	11. B2 (Second brake) brake piston	
2. O-ring	7. B1 brake disc	12. B2 brake plate	
3. B1 brake (Second coast brake) piston	8. Clutch backing plate	13. B2 brake disc	

DISASSEMBLY

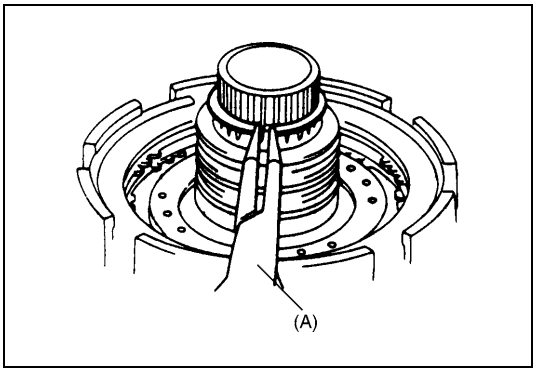

1) Remove retaining ring.

Special tool
(A): 09920-76010

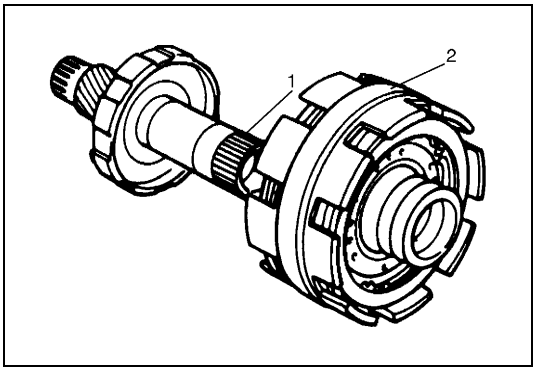

2) Pull out center support assembly (2) from planetary sun gear (1).

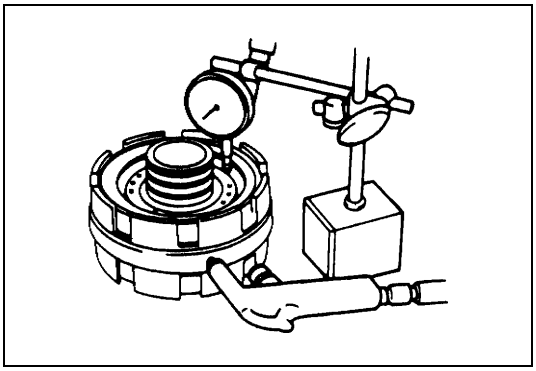

3) Apply 4 – 8 kg/cm^2 air pressure into fluid hole at the extreme left and measure movement of B1 brake (Second coast brake) piston.
If measured value is not within standard range, replace B1 brake plate or B1 brake disc.

Standard B1 brake piston movement:
1.00 – 1.20 mm (0.039 – 0.047 in.)

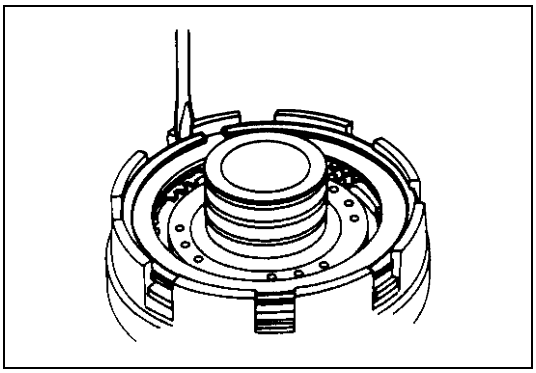

4) Remove retaining ring.

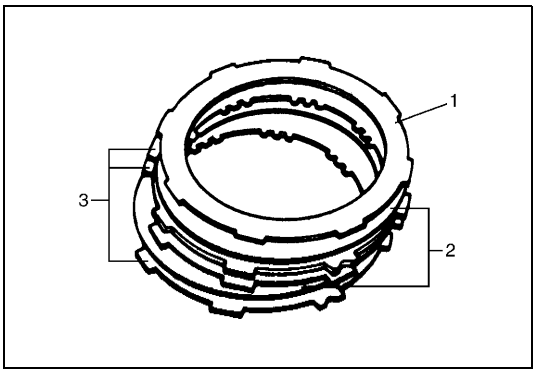

5) After removing clutch backing plate (1), remove B1 brake plates (3) and B1 brake discs (2).

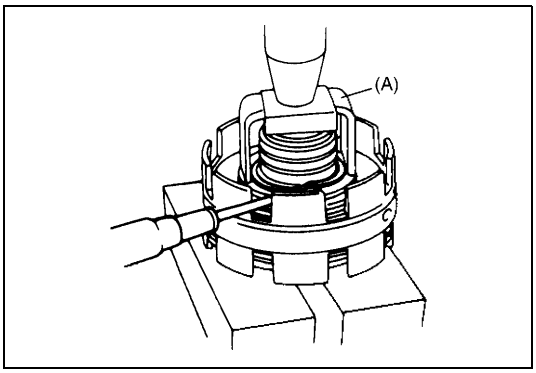

6) Using special tool and hydraulic press, compress piston return spring and remove snap ring.

CAUTION:
Be careful when applying pressure, for overpressure will cause plate section of piston return spring to deform.

Special tool
(A): 09926-98310

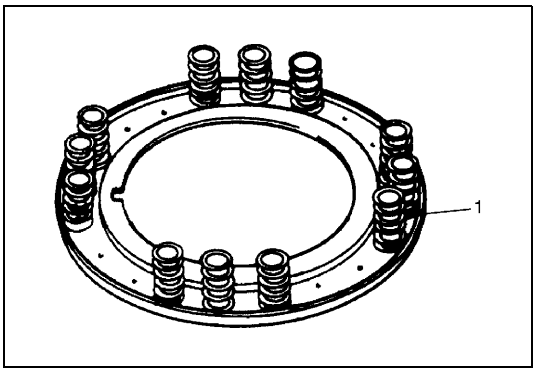

7) Remove brake piston return spring (1).

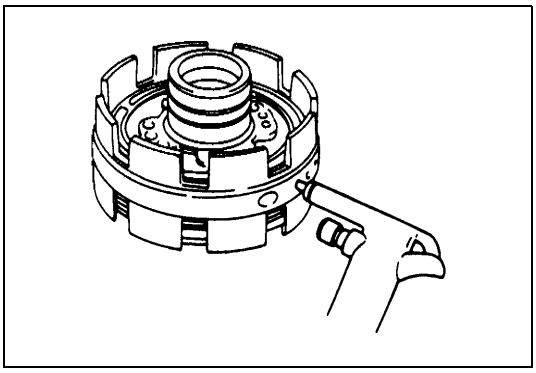

8) Blow air into fluid hole at the extreme left and remove B1 brake piston as shown in the figure. Then remove piston inner O-ring and piston outer O-ring from B1 brake piston.

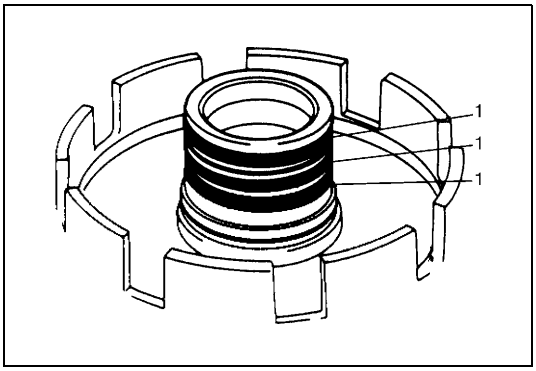

9) Remove 3 seal rear rings (1).

NOTE:
Use care not to open ring more than necessary.

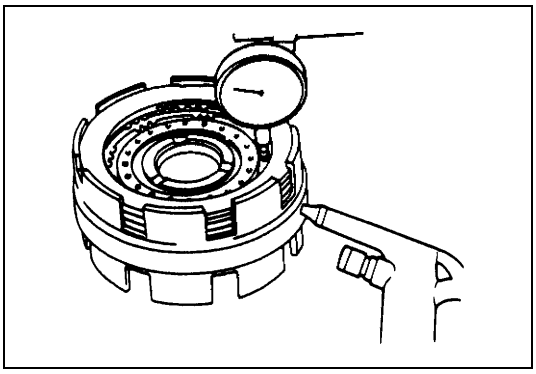

10) Apply 4 – 8 kg/cm^2 air pressure into the second hole from the left and measure stroke of B2 brake (Second brake) piston as shown in figure.
If measured value is not within standard range, replace B2 brake plate or B2 brake disc.

Standard B2 brake piston stroke:
1.01 – 2.25 mm (0.040 – 0.088 in.)

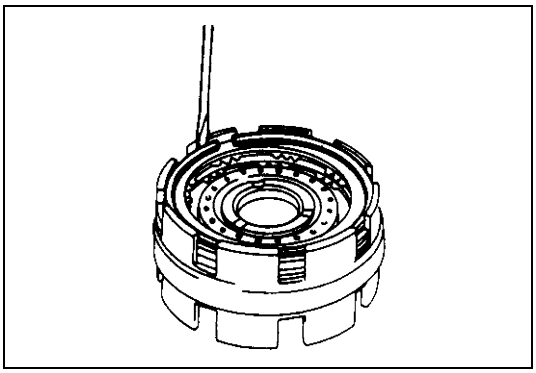

11) After removing retaining back plate ring, remove clutch backing plate, B2 brake plates and B2 brake discs.

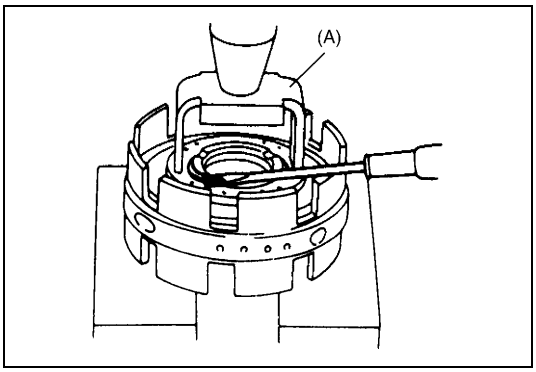

12) Using special tool and hydraulic press, compress brake piston return spring and remove snap B1 brake ring.

CAUTION:
Be careful when applying pressure, for overpressure will cause plate section of piston return spring to deform.

Special tool
(A): 09926-98310

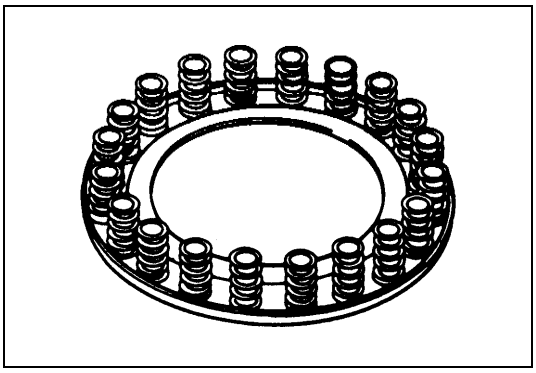

13) Remove brake piston return spring.

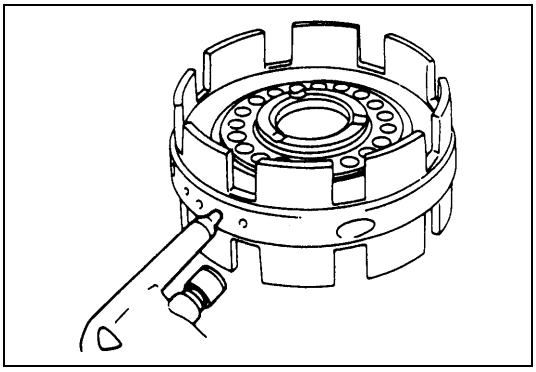

14) Blow air into the second air hole from the left and remove B2 brake piston. Then remove piston inner O-ring and piston outer O-ring from B2 brake piston.

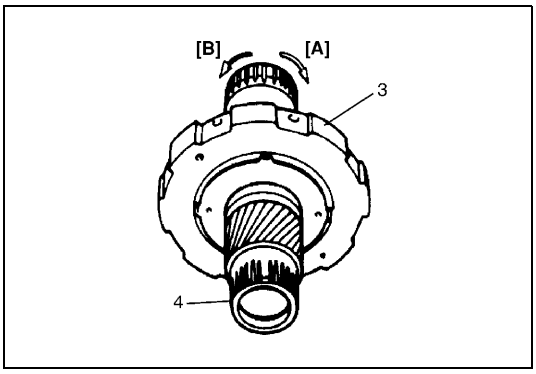

15) With B2 brake hub assembly (3) held stationary, turn planetary sun gear (4) clockwise to check that it locks and then counterclockwise to check that it turns smoothly.

[A]:	Locks
[B]:	Turns

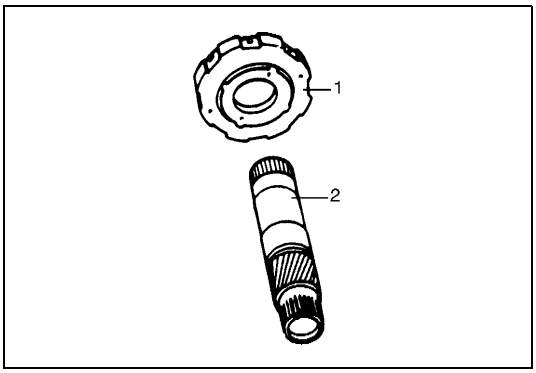

16) Remove B2 brake hub assembly (1) from planetary sun gear (2).

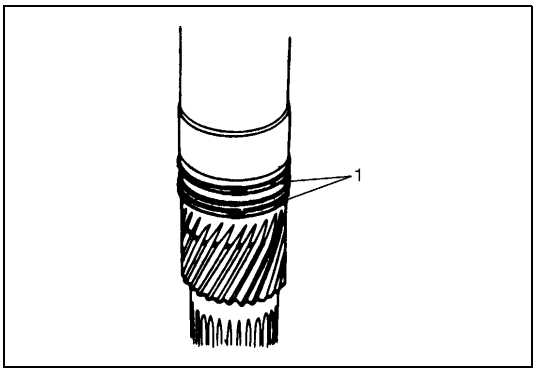

17) Remove 2 sun gear seal rings (1) from planetary sun gear.

NOTE:
Use care not to open sun gear seal ring more than necessary.

ASSEMBLY

Assemble components by reversing disassembly procedure and noting the following points.

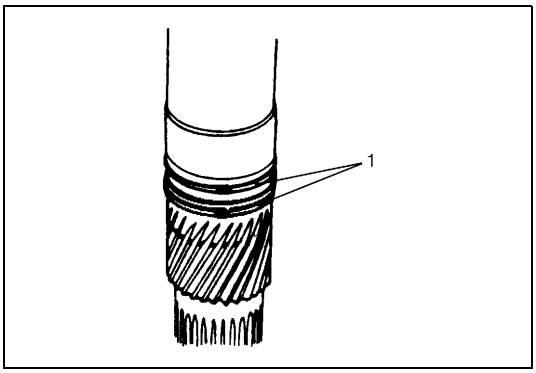

- Snap both ends of sun gear seal ring (1) securely.
- Do not open sun gear seal ring more than necessary.
- Always use new O-ring and apply A/T fluid before installation.
- When installing O-ring, make sure that it is not kinked or caught.
- Push in brake piston horizontally.
- When installing brake piston return spring, be careful so that spring will not fall or tilt.

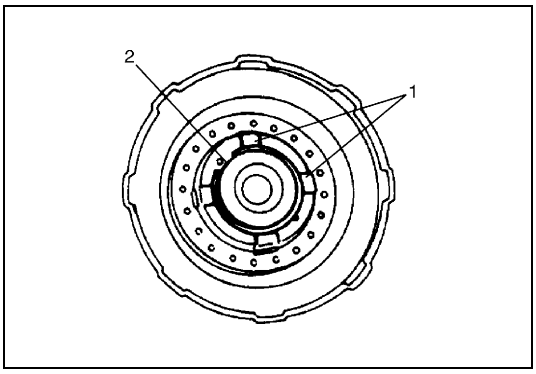

- When installing snap ring, do not align lug (1) of retainer with opening in snap ring (2).

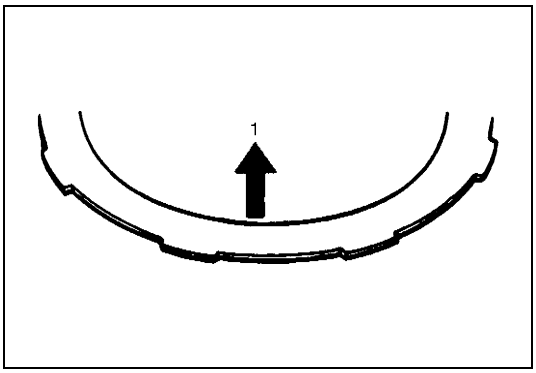

- When installing brake discs, brake plates and clutch backing plate, refer to the first figure of “CENTER SUPPORT” in this section.
- Install clutch backing plate with its chamfered side facing brake disc.

1. Clutch disc facing side

- After installing each retaining backing plate ring, measure movement of brake piston again.
  If it is not within standard range, it is possible that ring is not installed properly. Then disassemble and reassemble again.

Standard movement of B1 brake piston:
1.00 – 1.20 mm (0.039 – 0.047 in.)

Standard movement of B2 brake piston:
1.01 – 2.25 mm (0.040 – 0.088 in.)

Planetary gears and output shaft

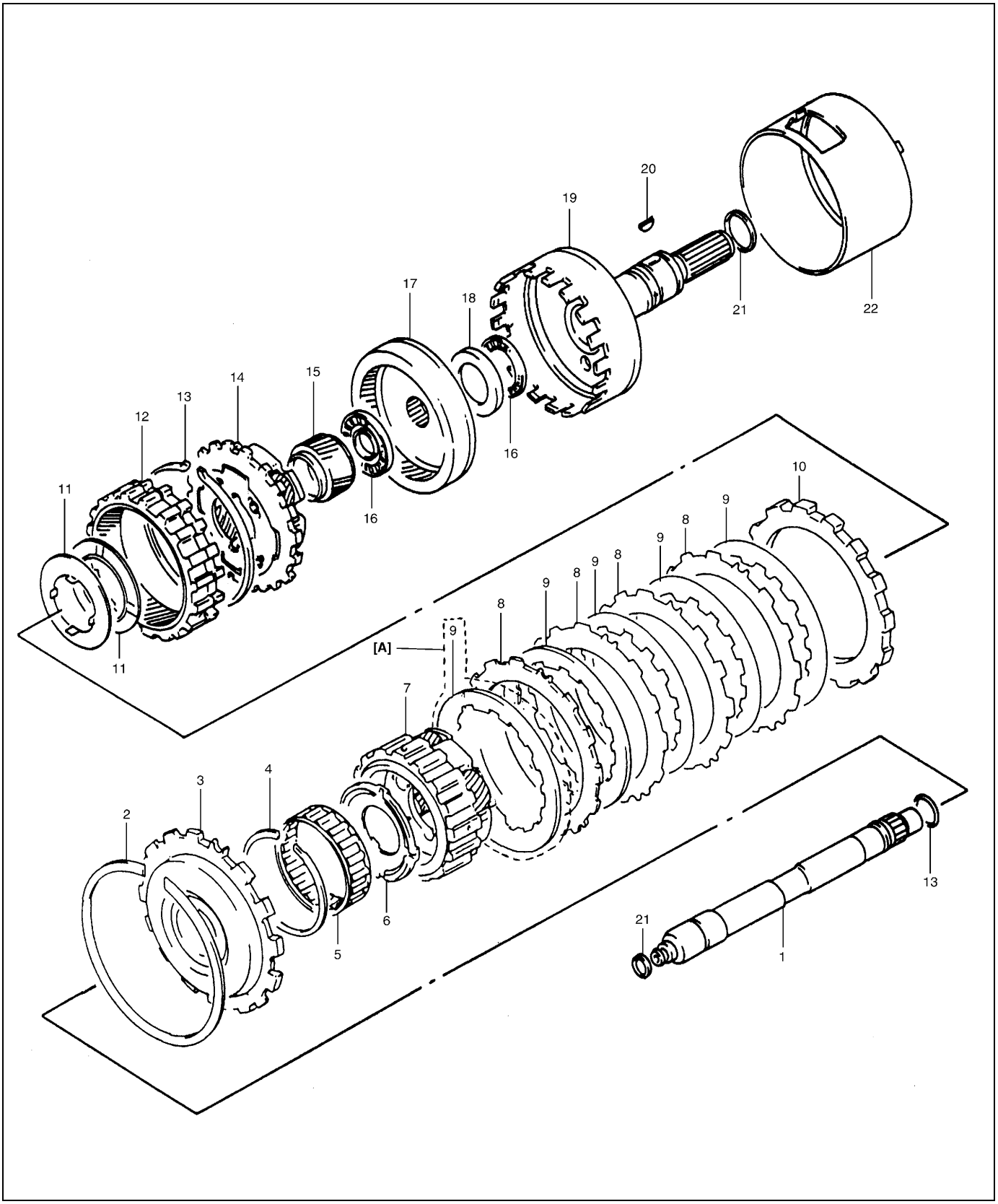

[A]: [G16 and H25 engines only]	6. One-way clutch thrust washer	12. Front planetary ring gear	18. Bearing race
1. Inner shaft	7. Front planetary gear	13. Retaining ring	19. Output shaft assembly
2. Retaining ring	8. Reverse brake plate	14. Rear planetary gear	20. Key
3. Reverse brake reaction plate	9. Reverse brake disc	15. Planetary sun gear	21. Seal ring
4. Retaining ring	10. Reverse brake backing plate	16. Bearing	22. Brake applying tube
5. One-way clutch	11. Washer	17. Rear planetary ring gear	

DISASSEMBLY

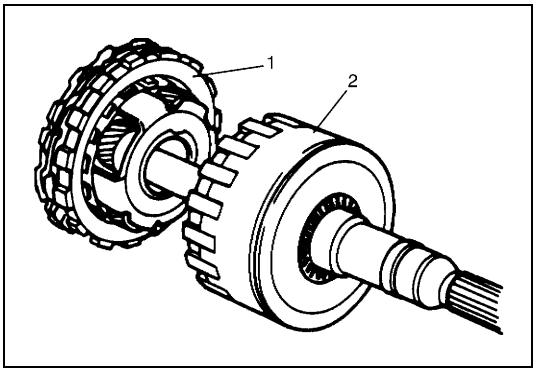

1) Remove front planetary gear assembly (1) from output shaft assembly (2).

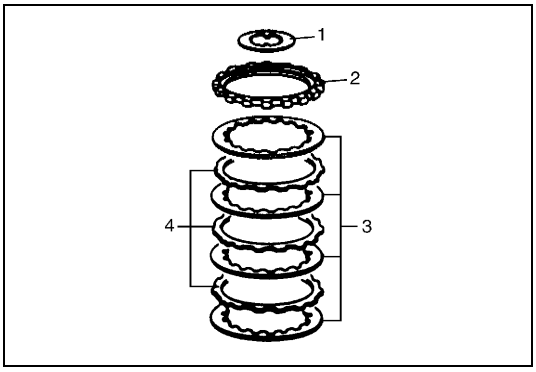

2) Remove rear planetary thrust washer (1), reverse brake backing plate (2), reverse brake disc (3) and reverse brake plate (4) from front planetary gear assembly.

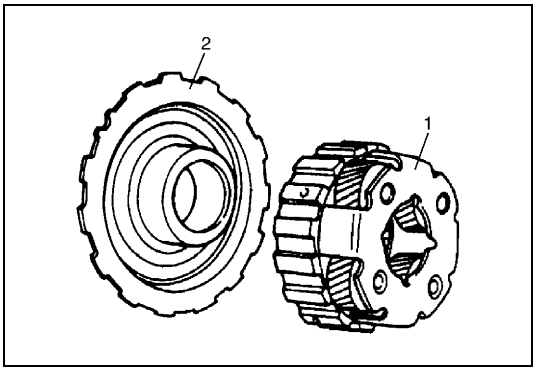

3) Remove reverse brake reaction plate (2) from front planetary gear (1).

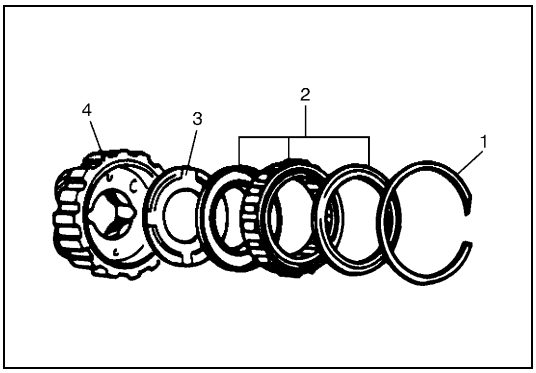

4) After removing retaining ring (1), remove one-way clutch (2) and one-way clutch rear thrust washer (3).

4. Front planetary gear

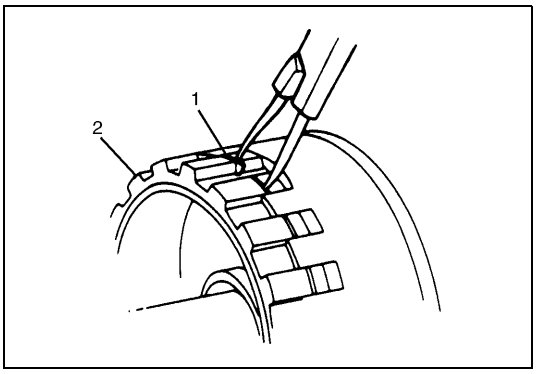

5) After removing retaining ring (1), remove front planetary ring gear (2), thrust bearing and rear planetary race.

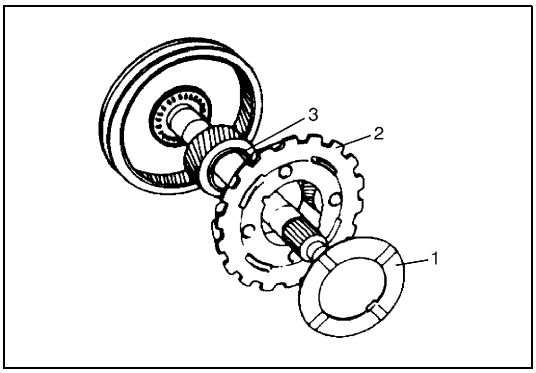

6) Remove rear planetary thrust washer (1), rear planetary gear (2) and rear planetary sun gear (3).

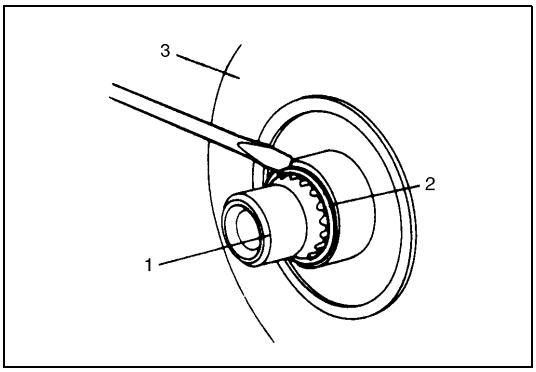

7) After removing retaining ring (2) from inner shaft (1), remove rear planetary ring gear (3) and thrust bearing assembly.

ASSEMBLY

Assemble components by reversing disassembly procedure and noting following points.

- Refer to the first figure of “PLANETARY GEARS AND OUTPUT SHAFT” when installing each component.
- Check seal sleeve ring for damage before installation and replace if damaged.

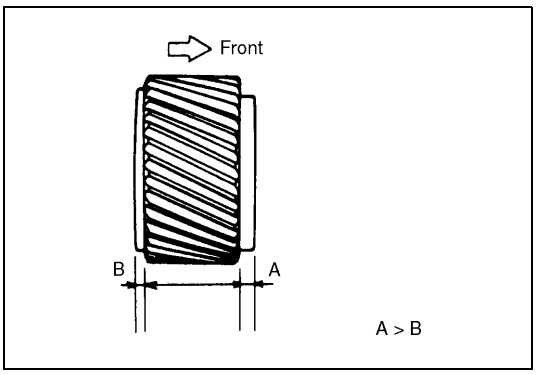

- Install planetary sun gear as shown in the figure.
- Fit retaining rings into groove securely.

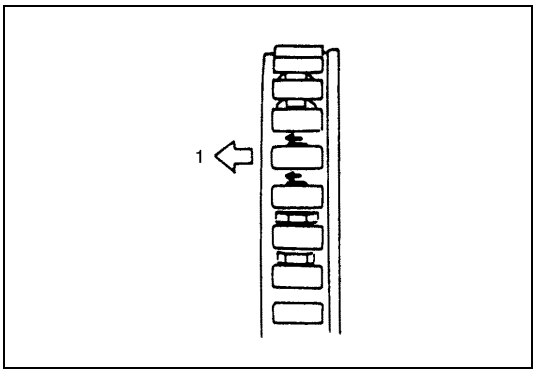

- Install one-way clutch as shown in the figure.

1. Front planetary gear side

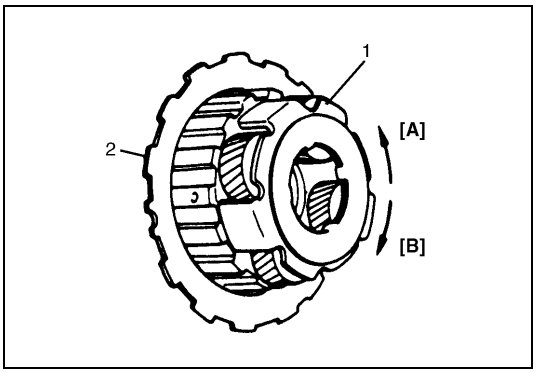

- Install reverse brake reaction plate (2) to front planetary gear (1). With reverse brake reaction plate (2) fixed stationary, turn front planetary gear (1) clockwise to check that it locks and then counterclockwise to check that it turns smoothly.

[A]:	Rotates
[B]:	Locks

Valve body assembly

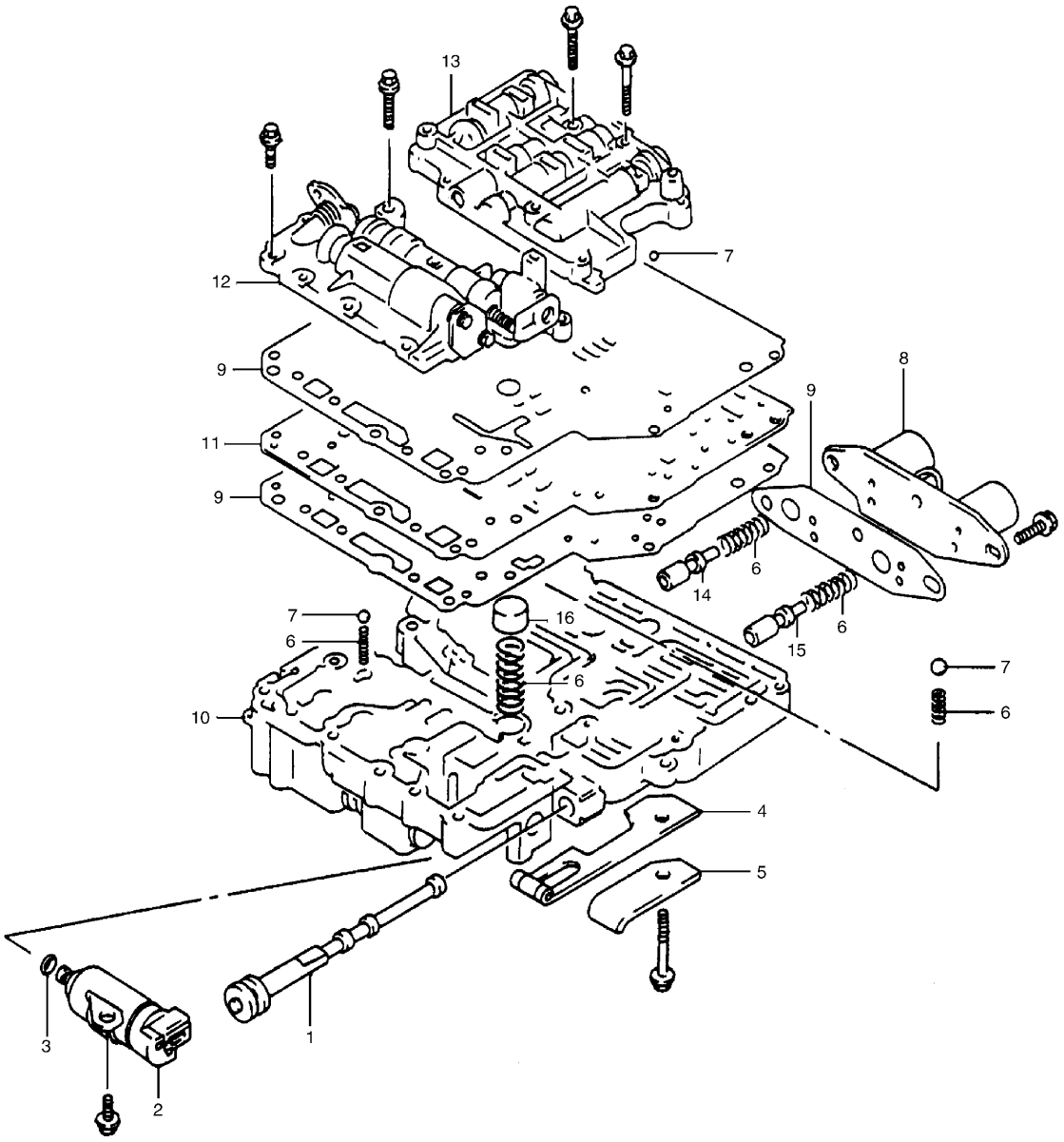

1. Manual valve	5. Plate	9. Gasket	13. Rear upper valve body
2. TCC solenoid valve (Solenoid valve No.2)	6. Spring	10. Lower valve body assembly	14. Intermediate coast modulator valve
3. O-ring	7. Ball	11. Plate	15. Low coast modulator valve
4. Detent spring	8. Shift solenoid valve A & B (Solenoid valve No.1)	12. Front upper valve body	16. By-pass valve

DISASSEMBLY

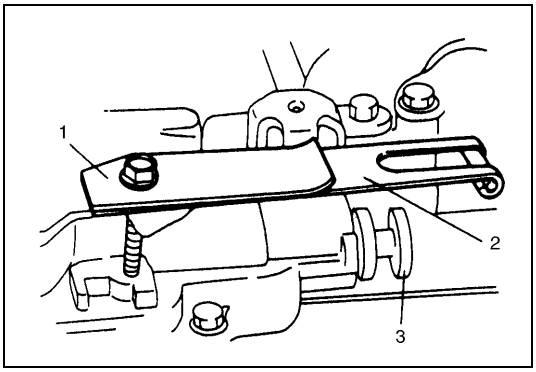

1) Remove detent spring (2), plate (1) and manual valve (3).

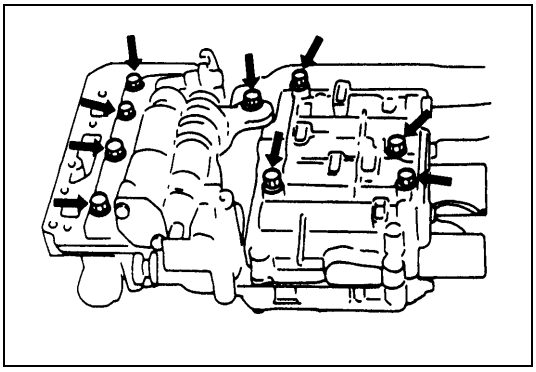

2) Remove bolts from upper valve body side.

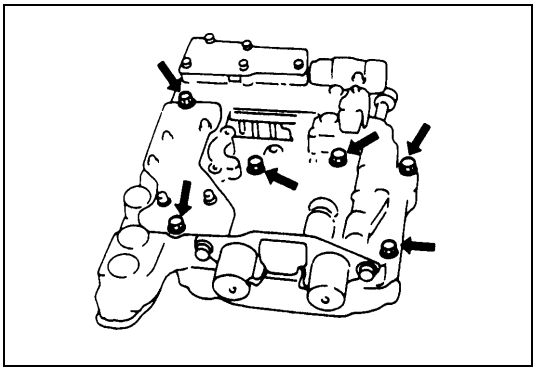

3) Remove bolts from lower valve body side.

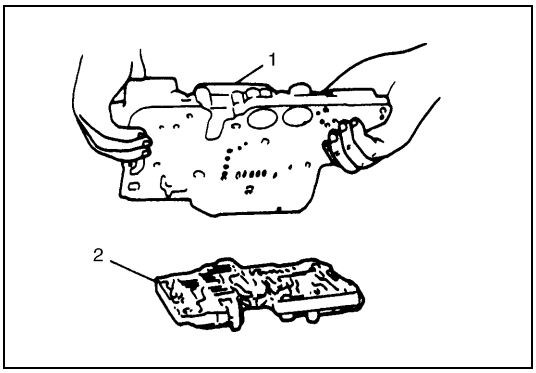

4) Separate upper valve body (2) and lower valve body (1) while pressing separator plate and valve body gasket against lower valve body (1) to prevent balls, spring and others from coming out of valve body.

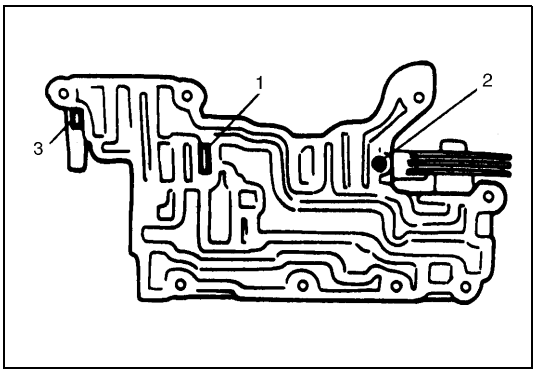

5) Confirm that there are valve, balls and plate as shown in the figures.
- Front upper valve body assembly.

1.	Throttle valve keep plate
2.	Locating pin
3.	Cut back valve retainer

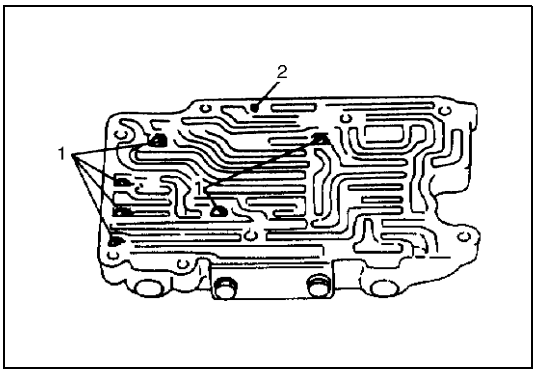

- Rear upper valve body assembly.

1.	Valve body ball
2.	Needle roller

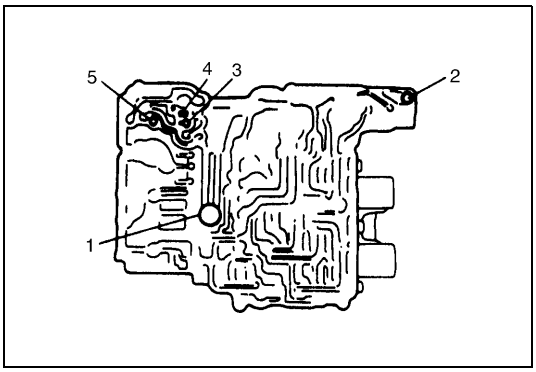

- Lower valve body assembly.

1.	Bypass valve
2.	Valve body ball
3.	Check ball
4.	Primary regulator valve sleeve retainer
5.	Locating pin

ASSEMBLY

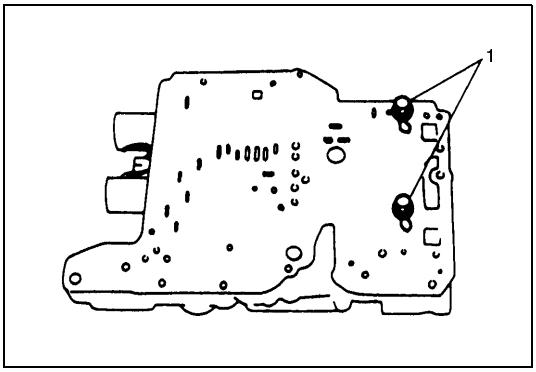

1) Place separator plate and new lower valve body gasket on lower valve body assembly and tighten installation section of front upper valve body assembly with 2 bolts (1) temporarily.

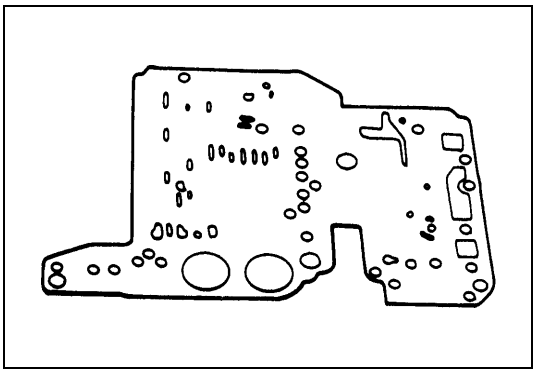

2) Place new upper valve body gasket on lower valve body assembly.

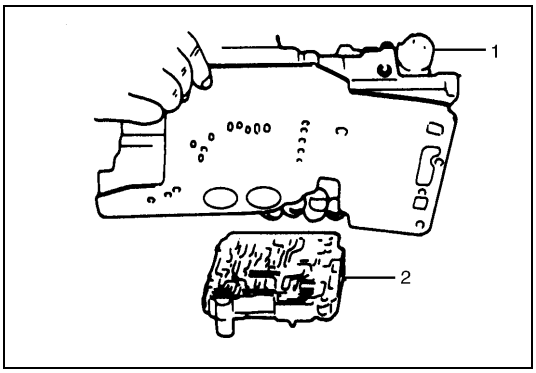

3) While holding upper valve body gasket and lower valve body (1) assembly together, install it on rear upper valve body assembly (2).

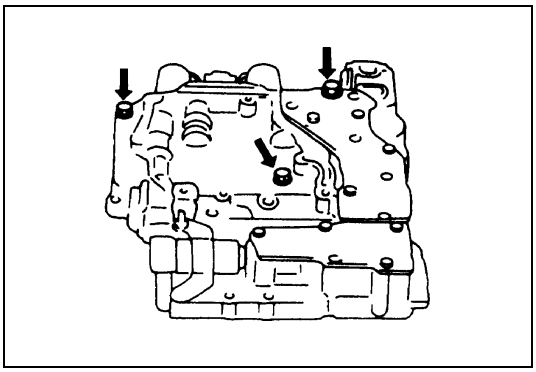

4) Tighten 3 bolts indicated in the figure temporarily.

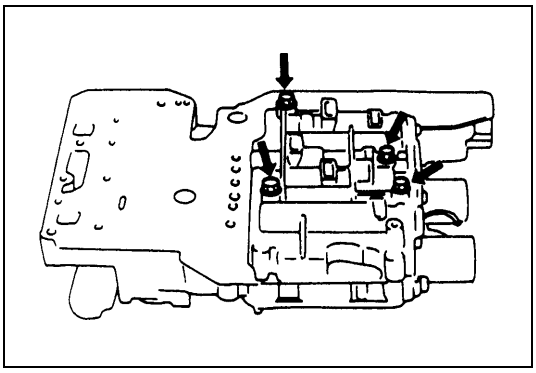

5) Turn over lower valve body assembly and tighten 4 bolts indicated in the figure temporarily

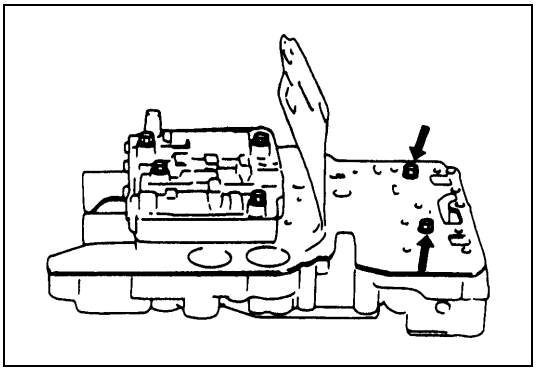

6) Remove 2 bolts tightened temporarily in Step 1).

NOTE:

Be careful not to damage gasket.

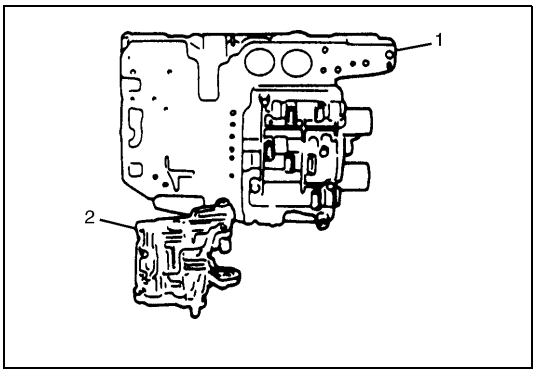

7) Install lower valve body assembly (1) on front upper valve body (2).

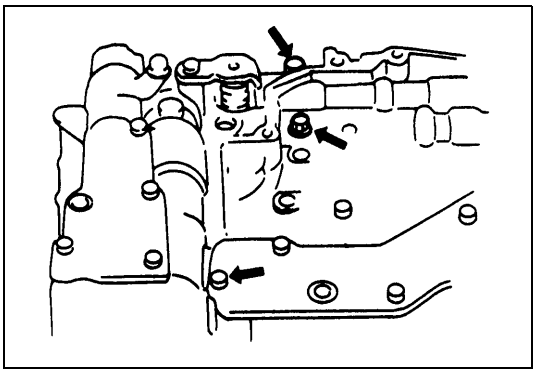

8) Tighten 3 bolts indicated in the figure temporarily.

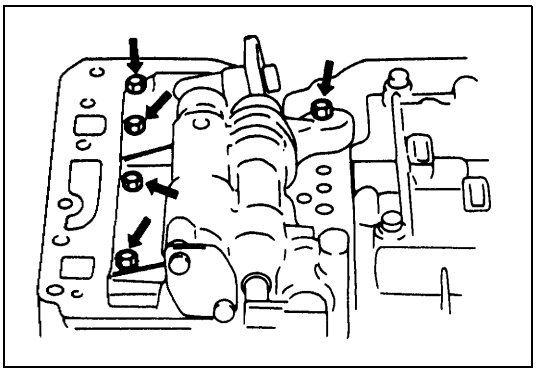

9) Turn over control valve lower body and tighten 5 bolts indicated in the figure temporarily.

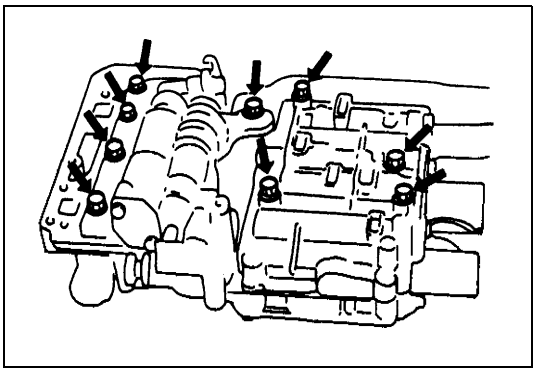

10) Tighten bolts on upper valve body side to specified torque.

Tightening torque
Upper valve body bolt: 5.5 N·m (0.55 kg-m, 4.0 lb-ft)

NOTE:

Tighten bolts by a certain amount of torque evenly and repeat it several times till specified torque is attained.

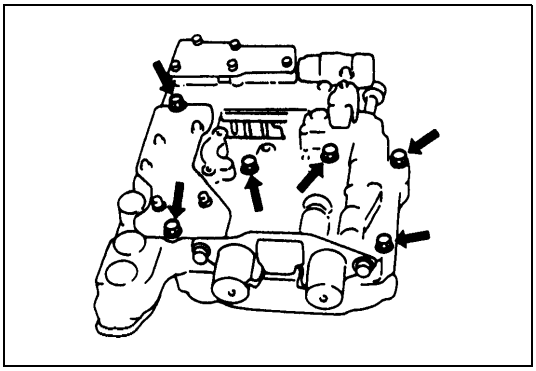

11) Tighten bolts on lower valve body inside to specified torque.

Tightening torque
Lower valve body bolt: 5.5 N·m (0.55 kg-m, 4.0 lb-ft)

NOTE:

Tighten bolts by a certain amount of torque evenly and repeat it several times till specified torque is attained.

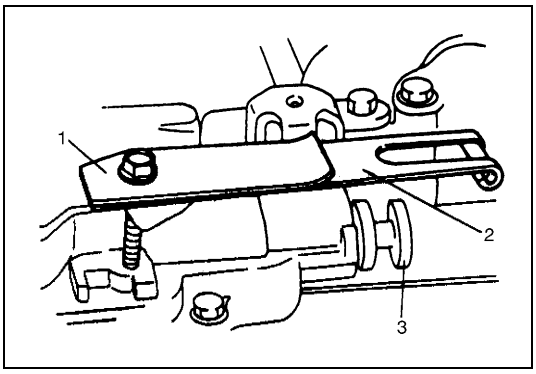

12) After installing manual valve (3), install detent spring (2) and plate (1) and tighten detent spring bolt to specified torque.

Tightening torque
Detent spring bolt: 5.5 N·m (0.55 kg-m, 4.0 lb-ft)

Front upper valve body

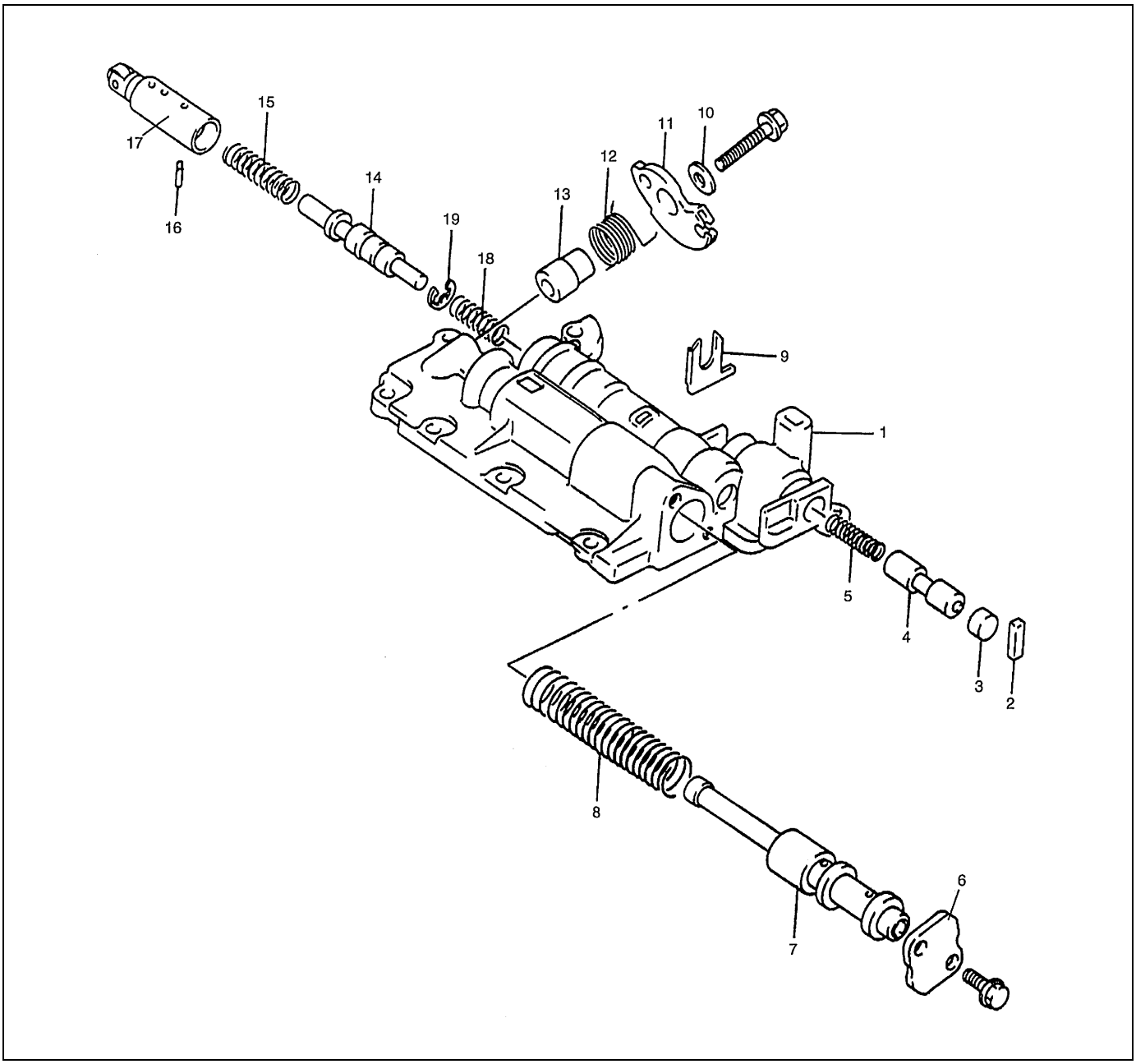

1. Front upper valve boy	6. Front valve end cover	11. Throttle valve cam	16. Locating pin
2. Cut valve retainer	7. Secondary regulator valve	12. Cam return spring	17. Down shift plug
3. Cut back plug	8. Secondary regulator spring	13. Cam spacer	18. Throttle valve secondary spring
4. Cut back valve	9. Throttle valve keep plate	14. Throttle valve	19. Throttle valve compensating ring
5. Spring	10. Washer	15. Throttle valve primary spring	

ASSEMBLY

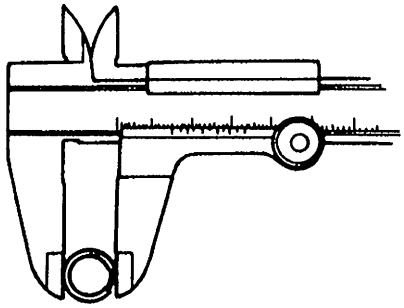

Assemble each component by reversing disassembly procedure and noting the following points.

- Coil outer diameter and free length of each valve spring should be as listed below. Be sure to use each one of correct size.

Coil outer diameter and free length of each valve spring

Name of spring	Outer diameter	Free length
Secondary regulator valve spring	17.43 mm (0.681 in.)	71.27 mm (2.806 in.)
Cut back valve spring	6.85 mm (0.269 in.)	23.00 mm (0.905 in.)
Throttle valve secondary spring	8.56 mm (0.337 in.)	18.86 mm (0.743 in.)
Throttle valve primary spring	10.90 mm (0.429 in.)	39.55 mm (1.557 in.)

- Install as many throttle valve compensating rings as written down when disassembled.

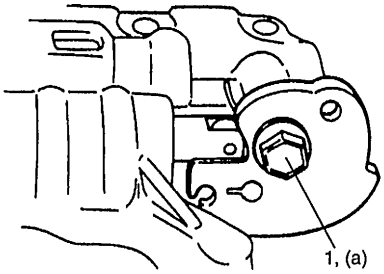

- Tighten throttle cam bolt (1) to specified torque.

Tightening torque
Throttle cam bolt
(a): 7.5 N·m (0.75 kg-m, 5.5 lb-ft)

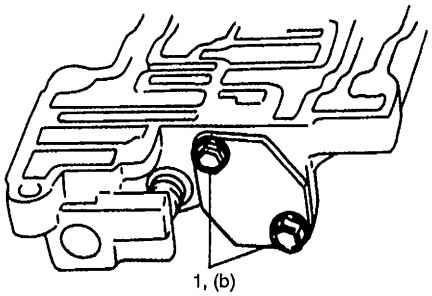

- Tighten pressure relief valve bolts (1) to specified torque.

Tightening torque
Pressure relief valve bolt
(b): 5.5 N·m (0.55 kg-m, 4.0 lb-ft)

Rear upper valve body

1. 3 – 2 kickdown control valve plug	5. Rear upper valve body	9. Shift valve plug	13. Shift valve spring
2. Clutch sequence valve	6. Plate	10. 2 – 3 shift valve	14. 3 – 4 shift valve
3. Reverse brake sequence valve spring	7. Gasket	11. Shift valve spring	15. Shift valve spring
4. Needle roller	8. Retainer	12. 1 – 2 shift valve	

DISASSEMBLY

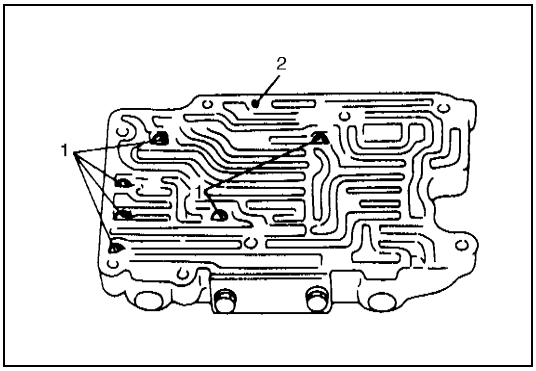

1) Take out 6 valve body balls (1).

2. Needle roller

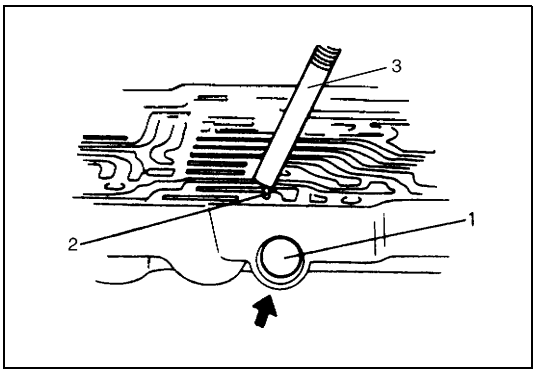

2) With 3 – 2 kickdown control valve plug (1) pressed with finger, take out needle roller (2) with magnet (3). Then remove 3-2 kickdown control valve plug (1), clutch sequence valve and reverse brake sequence valve spring.

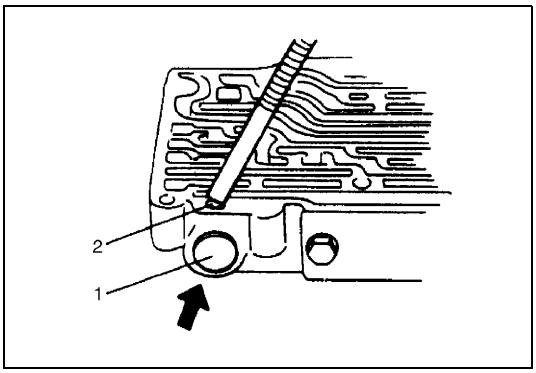

3) With shift valve plug (1) pressed with finger, take out shift valve retainer (2) with magnet and then remove shift valve plug (1) and 3 – 4 shift valve spring.

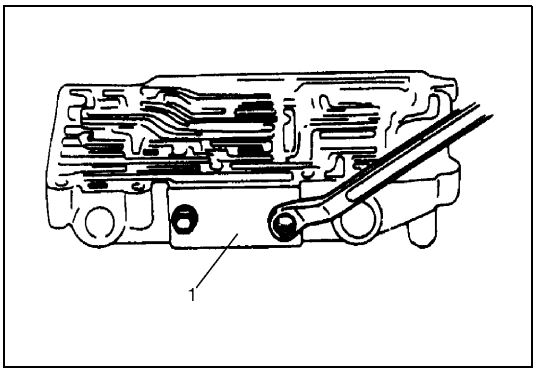

4) Remove 2 plate bolts. Then remove rear upper valve body plate (1) and rear upper valve body gasket and take out 1 – 2 shift valve and shift valve spring.

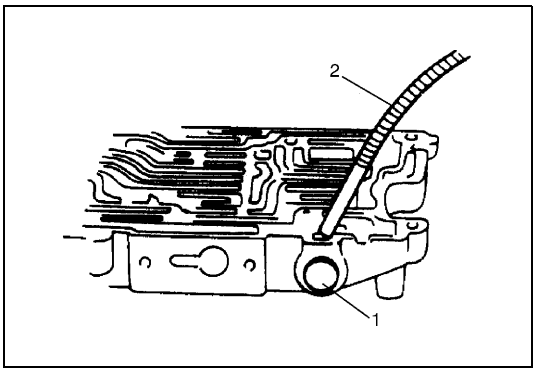

5) With shift valve plug (1) pressed with finger, remove valve retainer with magnet (2) and then remove shift valve plug (1), 2 – 3 shift valve and shift valve spring.

ASSEMBLY

Assemble each component by reversing disassembly procedure and noting the following points.

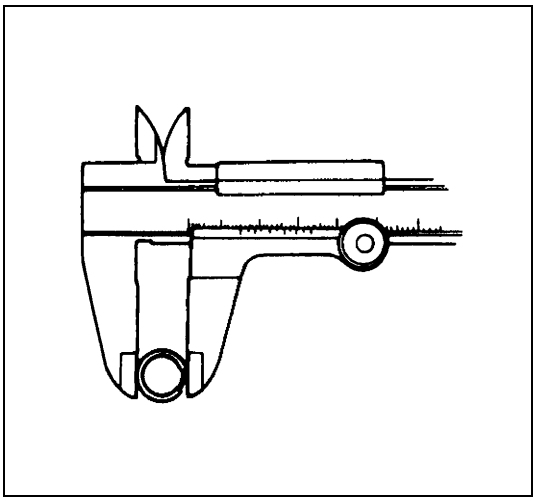

- Coil outer diameter and free length of each valve spring should be as listed below. Be sure to use each one of correct size.

Coil outer diameter and free length of each valve spring

Name of spring	Outer diameter	Free length
Reverse brake sequence valve spring	9.10 mm (0.358 in.)	37.55 mm (1.478 in.)
1 – 2 shift valve spring	8.90 mm (0.350 in.)	29.15 mm (1.147 in.)
2 – 3 shift valve spring		
3 – 4 shift valve spring		

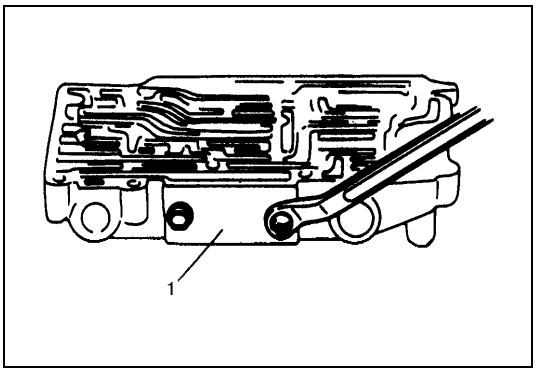

- Use new rear upper valve body gasket.

- Tighten rear upper valve body plate (1) bolt to specified torque.

Tightening torque
Rear upper valve body plate bolt:
5.5 N·m (0.55 kg-m, 4.0 lb-ft)

Lower valve body

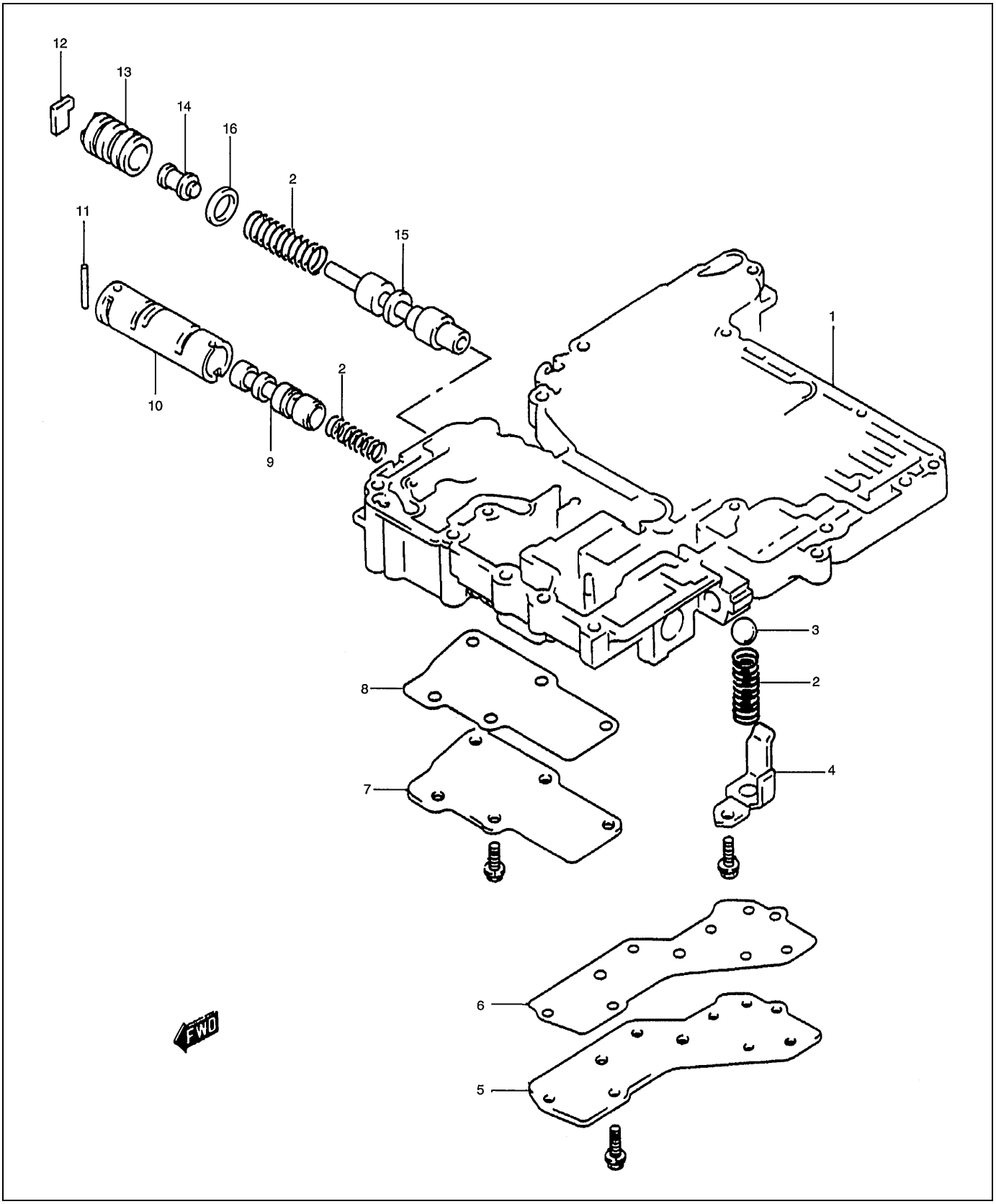

1. Lower valve body	5. Lower valve body plate	9. TCC (Lock-up) control sleeve	13. Primary regulator valve sleeve
2. Spring	6. Lower valve body gasket	10. TCC (Lock-up) control valve	14. Primary regulator valve plunger
3. Pressure relief valve ball	7. TCC (Lock-up) control valve plate	11. Pin	15. Primary regulator valve
4. Pressure relief valve retainer	8. TCC (Lock-up) control valve gasket	12. Retainer	16. Spacer

DISASSEMBLY

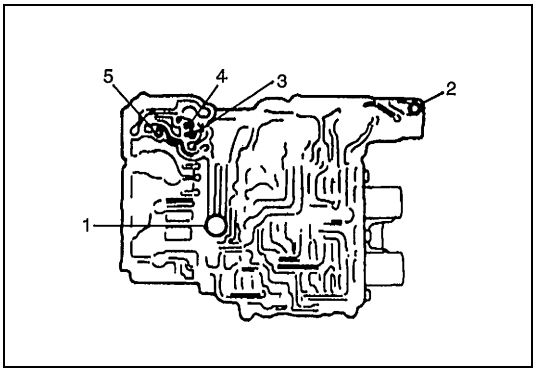

1) Remove bypass valve (1), bypass valve spring, check ball valve damping spring, valve body ball (2) and ball valve spring.

3.	Check ball
4.	Primary regulator valve sleeve retainer
5.	Locating pin

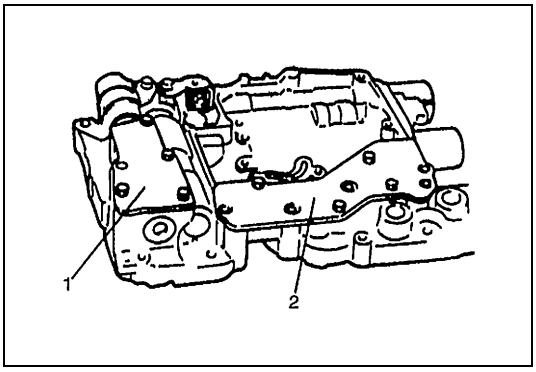

2) Remove lower valve body plate (1) and lower valve body plate gasket.
3) Remove TCC (lock-up) control valve plate (2) and TCC (lock-up) control valve gasket.

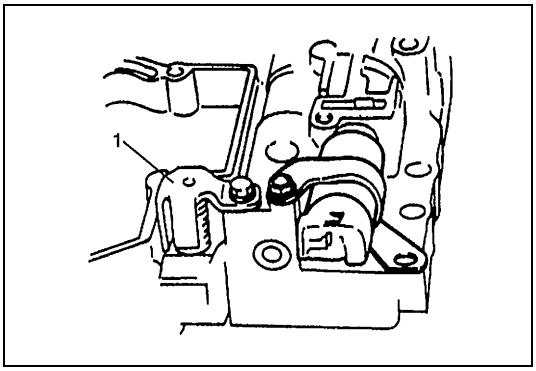

4) With pressure relief valve retainer (1) pressed with finger, remove pressure relief valve bolt and then remove pressure relief valve retainer (1), pressure relief valve spring and pressure relief valve ball.

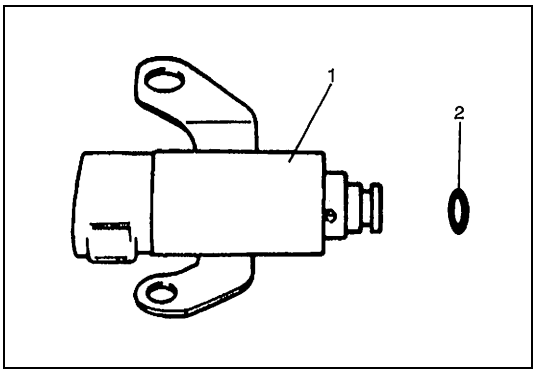

5) Remove TCC (lock-up) solenoid valve (1) and then remove O-ring (2) from TCC solenoid valve (1).

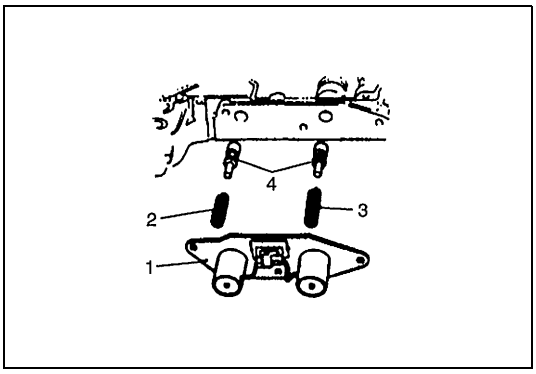

6) After removing shift solenoid valve (A & B) (1), remove solenoid valve gasket, low coast modulator valve spring (2), inter coast modulator valve spring (3) and 2 intermediate coast modulator valves (4).

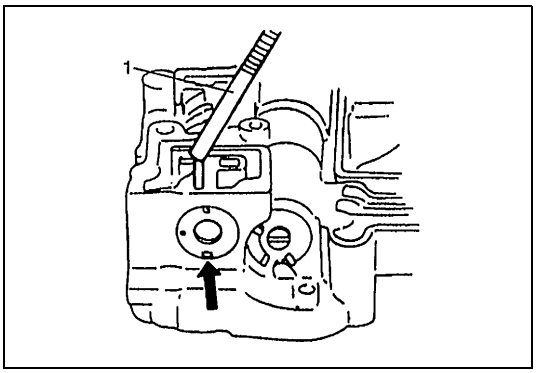

7) Pressing TCC (lock-up) control sleeve with finger and using magnet (1), remove locating pin and then remove TCC (lock-up) control sleeve, TCC (lock-up) control valve and TCC (lock-up) control valve spring.

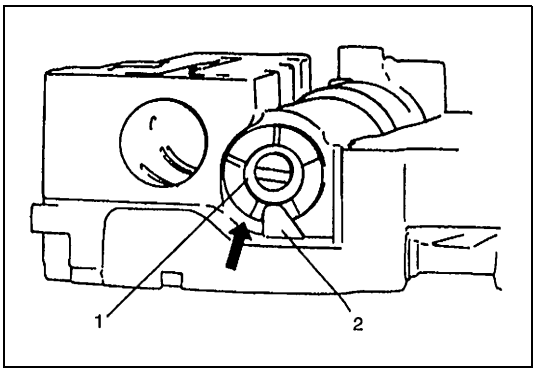

8) Check which step of primary regulator valve sleeve (1) (how many steps down from its tip) contacts primary regulator valve sleeve retainer (2).

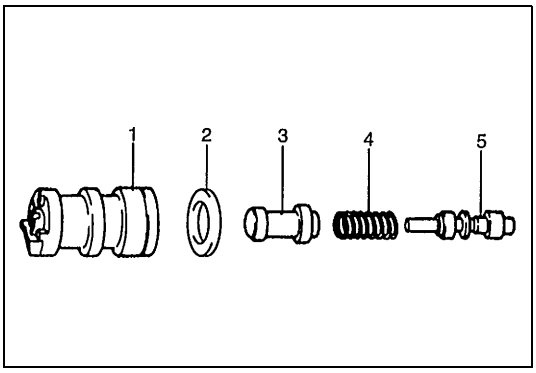

9) Pressing primary regulator valve sleeve (1) with finger and using magnet, remove primary regulator valve sleeve retainer and then remove primary regulator valve sleeve (1), spacer (2), primary regulator valve plunger (3), primary regulator valve spring (4) and primary regulator valve (5).

ASSEMBLY

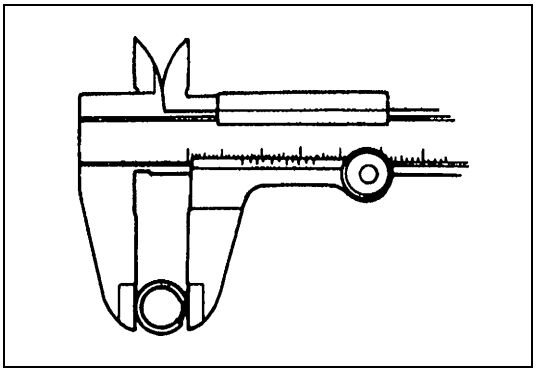

Assemble each component by reversing disassembly procedure and noting the following points.

- Coil outer diameter and free length of each valve spring should be as listed below. Be sure to use each one of correct size.

Coil outer diameter and free length of each valve spring:

Name of spring	Outer diameter	Free length
Pressure relief valve spring	13.14 mm (0.517 in.)	32.14 mm (1.265 in.)
TCC (Lock-up) control valve spring	11.40 mm (0.449 in.)	32.60 mm (1.283 in.)
Valve damping spring	4.95 mm (0.195 in.)	20.00 mm (0.787 in.)
Low coast modulator valve spring	10.00 mm (0.394 in.)	42.35 mm (1.667 in.)
Inter coast modulator valve spring	9.04 mm (0.356 in.) (G16 and J20 engines)	27.26 mm (1.073 in.) (G16 and J20 engines)
	10.00 mm (0.394 in.) (H25 engine)	25.60 mm (1.008 in.) (H25 engine)
Ball valve spring	10.50 mm (0.413 in.)	13.70 mm (0.539 in.)
Bypass valve spring	13.82 mm (0.544 in.)	28.90 mm (1.138 in.)
Primary regulator valve spring	17.02 mm (0.670 in.)	50.28 mm (1.980 in.)

- Install primary regulator valve sleeve so that its tip is positioned as it was before disassembly.
- Use new TCC (lock-up) control valve gasket, new solenoid gasket and new lower valve body plate gasket.

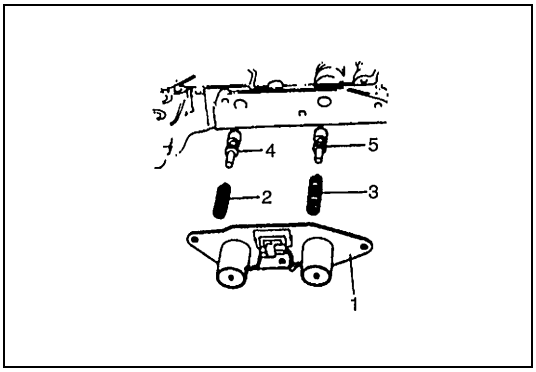

- Tighten shift solenoid valve bolt to specified torque.

Tightening torque
Shift solenoid valve bolt: 10 N·m (1.0 kg-m, 7.5 lb-ft)

1.	Solenoid valve No.1 (Shift solenoid valve)
2.	Low coast modulator valve spring
3.	Inter coast modulator valve spring
4.	Intermediate coast modulator valve
5.	Low coast modulator valve

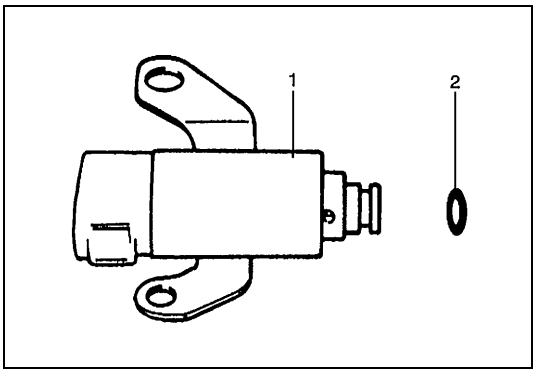

- Tighten TCC (lock-up) solenoid valve bolt to specified torque.

Tightening torque
TCC solenoid valve bolt: 5.5 N·m (0.55 kg-m, 4.0 lb-ft)

1.	Solenoid valve No.2 (TCC solenoid valve)
2.	O-ring

- Tighten pressure relief valve bolt to specified torque.

Tightening torque
Pressure relief valve bolt: 5.5 N·m (0.55 kg-m, 4.0 lb-ft)

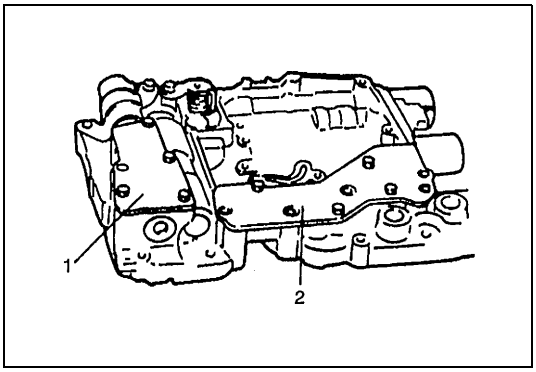

- Tighten lower valve body plate (1), TCC (lock-up) control valve plate (2) flange bolt to specified torque.

Tightening torque
Lower valve body and TCC control valve plate bolts:
5.5 N·m (0.55 kg-m, 4.0 lb-ft)

Unit Assembly

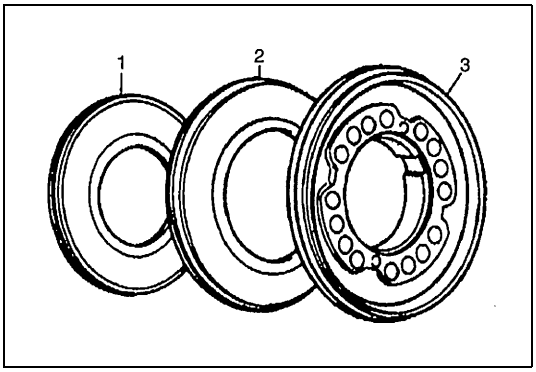

1) After applying A/T fluid to new O-rings, install them to reverse brake piston (3), reaction sleeve (2) and secondary reverse piston (1).

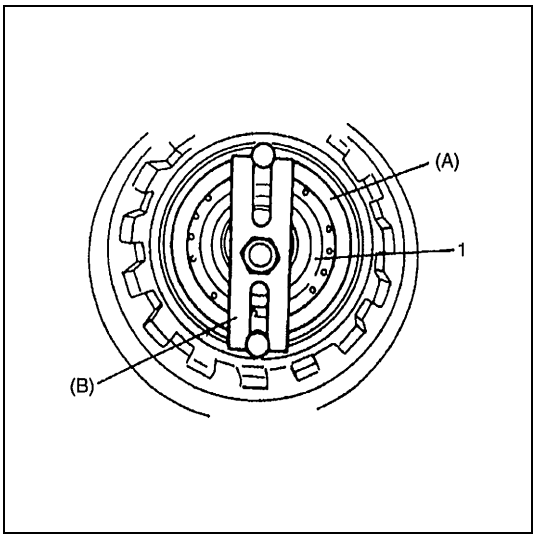

2) Install reverse brake piston assembly and brake piston return spring to transmission case, using care not to damage O-ring.
   Then install snap ring (1) with special tool.

Special tool
(A): 09926-98320
(B): 09941-84510

NOTE:

- **Install so that opening in snap ring (1) will not align with any of 3 lugs of spring seat.**
- **Do not compress spring more than necessary and do not allow it fall or tilt.**

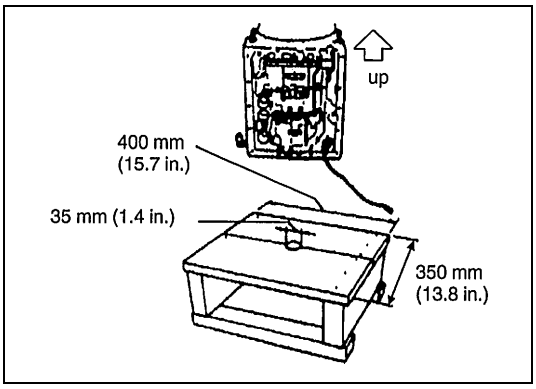

3) Prepare a stand as shown in the figure. It is necessary because work will be done with transmission case set upright from this step on.

NOTE:

- **To protect transmission case against damage, spread cloth on stand where case contacts.**
- **A stand of such size as shown in figure will facilitate work.**

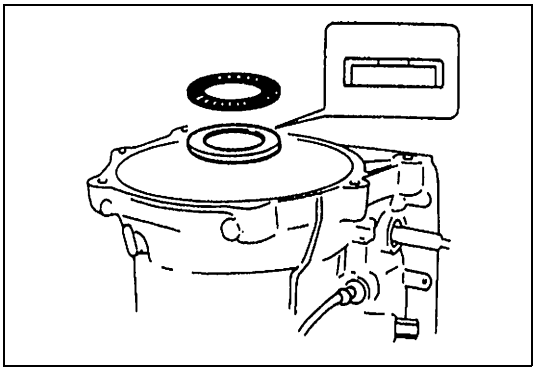

4) Install thrust output shaft bearing and thrust bearing output shaft race after lubricating them with grease.

NOTE:

Make sure that thrust bearing output shaft race is installed in proper direction.

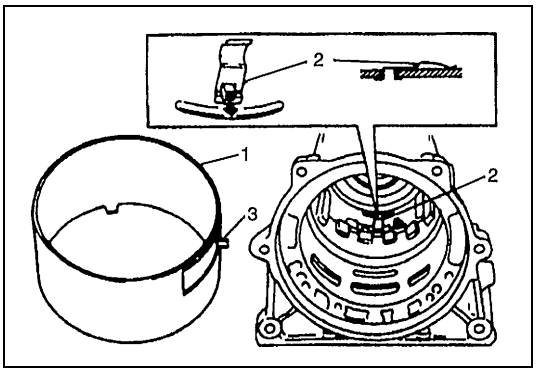

5) Install brake applying tube (1) so that its lug fits in a groove in transmission case. After installation, check that 4 lugs (3) along the underside of brake applying tube fit inside of reverse brake piston and leaf spring (2) is installed properly.

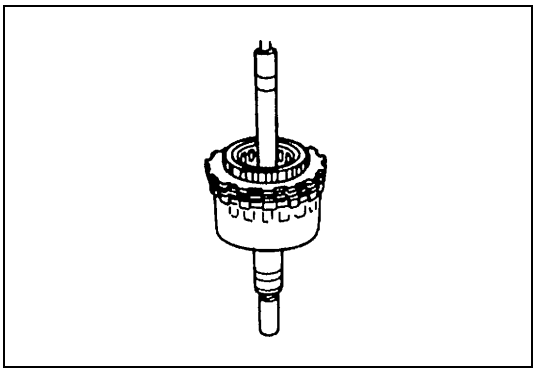

6) Remove reverse brake reaction plate of planetary gear assembly and align lugs of reverse brake plate, reverse brake disc and reverse brake packing plate. Install planetary gear assembly to transmission case so that aligned lugs fit in groove in transmission case.

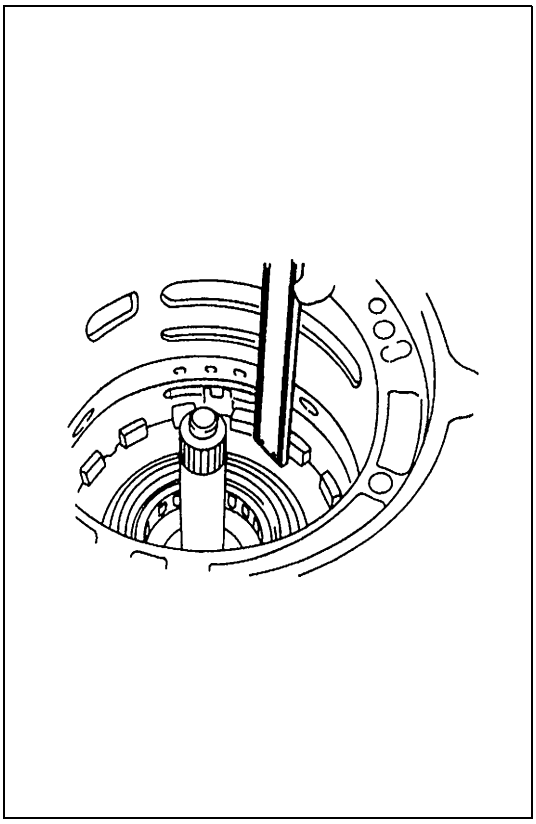

7) Measure clearance between reverse brake plate and lugs of transmission case.
   If measured value is less than standard range, it is possible that something is installed improperly or dust or fluid is on reverse brake disc, etc. If it exceeds standard range for G16 and J20 engine models, replace reverse brake disc, reverse brake plate or reverse brake backing plate.
   If it exceeds standard range for H25 engine model, adjust it to standard clearance with selective reverse brake backing plates as shown after making sure reverse brake disc, reverse brake plate and reverse brake backing plate are in good condition.
   If they are not in good condition, replace.

Standard clearance between reverse brake plate and lugs of transmission case:
0.56 – 2.29 mm (0.022 – 0.090 in.) (G16 engine)
0.61 – 2.64 mm (0.024 – 0.103 in.) (J20 and H25 engines)

Available plate thickness for H25 engine model only	**3.25, 3.50, 3.75, 4.00, 4.25 mm (0.128, 0.138, 0.148, 0.157, 0.167 in.)**

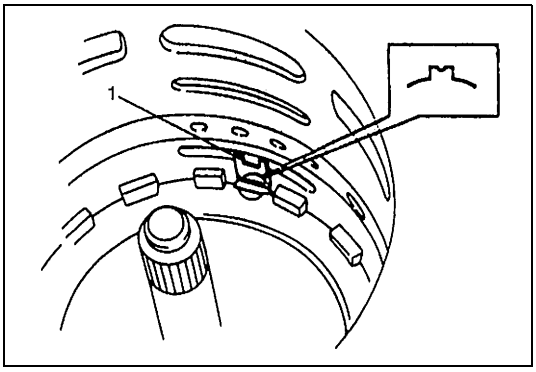

8) Install reverse brake reaction plate so that its lug with dent comes to the same position as leaf spring.

1. Relief spring

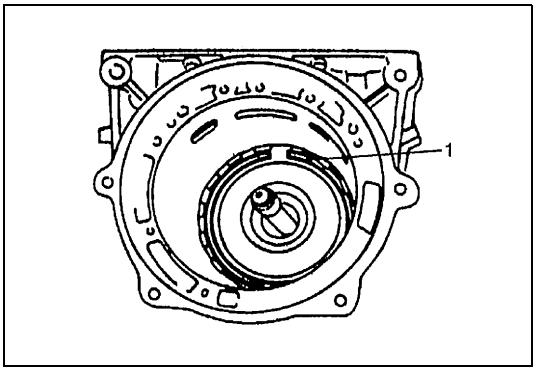

9) Using screwdriver with vinyl tape or the like wound at its tip, install retaining reaction plate ring (1). After installation, check that ring is in groove securely.

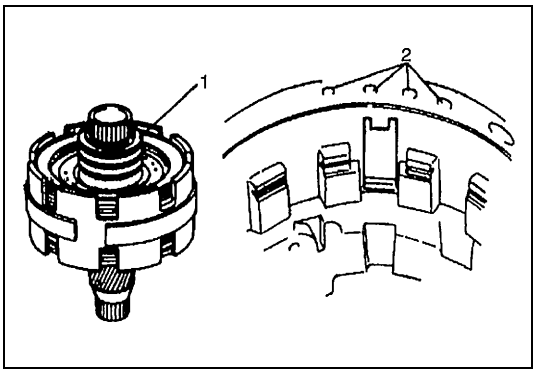

10) After confirming that lugs of all brake plates and brake discs are in grooves securely, hold retaining direct clutch ring (1) of planetary sun gear, install center support assembly by aligning fluid holes (2) in center support and transmission case.

NOTE:

Unless retaining direct clutch ring of planetary sun gear is held, brake valve gets off center support and that will make it impossible to align fluid holes with bolt holes.

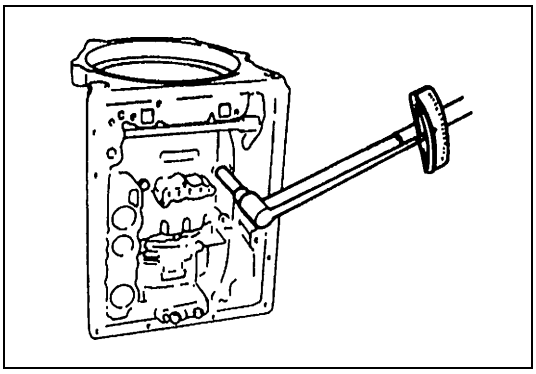

11) Tighten center support bolts by certain amount at a time till specified tightening torque is obtained.

Tightening torque
Center support bolt: 26 N·m (2.6 kg-m, 19.0 lb-ft)

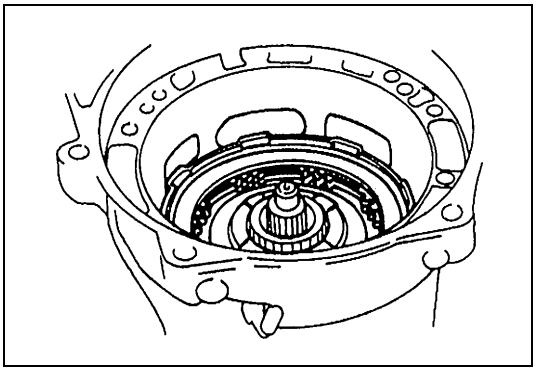

12) Install direct clutch assembly by aligning splines in direct clutch cylinder with planetary sun gear.

NOTE:

Ends of splines in direct clutch cylinder and planetary sun gear should come almost in match.

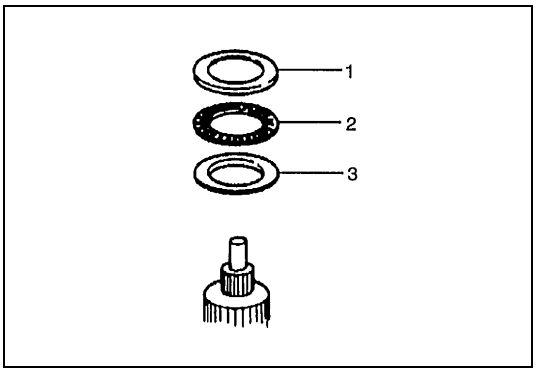

13) Apply grease to forward clutch rear No.1 race (1), thrust rear bearing (2), thrust bearing rear planetary ring race (3) and install thrust bearing planetary ring race (3) to direct clutch cylinder and forward clutch rear No.1 race and thrust bearing to forward clutch hub.

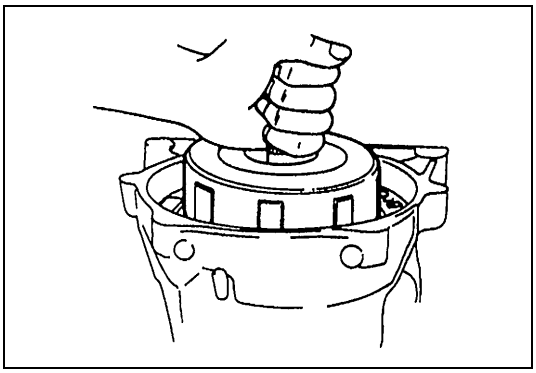

14) Install forward clutch assembly by putting all lugs of direct clutch disc hub together and matching them with groove cut in direct clutch input hub, and at the same time aligning splines in forward clutch hub with inner shaft.

NOTE:

Use care not to let forward clutch rear No.1 race and thrust bearing installed to forward clutch hub fall off.

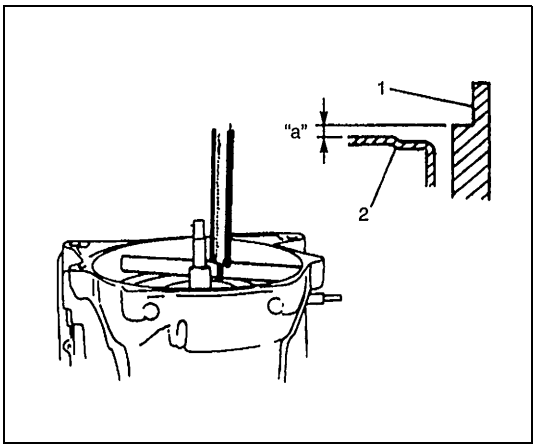

15) When clutch disc and plate have been replaced, check height difference between forward clutch input shaft and transmission case (1) by measuring as shown in the figure.

Standard height difference
"a": About 2.0 mm (0.079 in.)

NOTE:

If measured value is less than standard value, remove forward clutch assembly and install it again.

2. Forward clutch

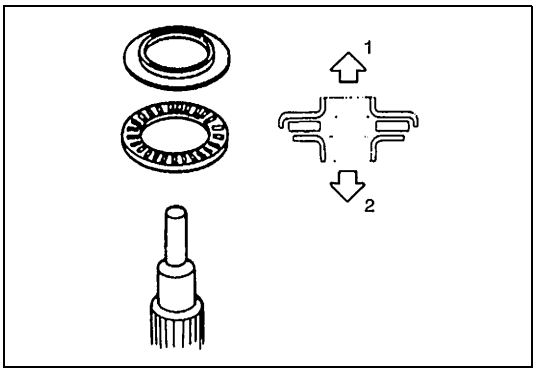

16) Apply grease to thrust forward clutch bearing and install it to forward clutch input shaft. Also apply grease to thrust rear race and install it to O/D case.

1. Planetary ring gear side
2. Forward clutch side

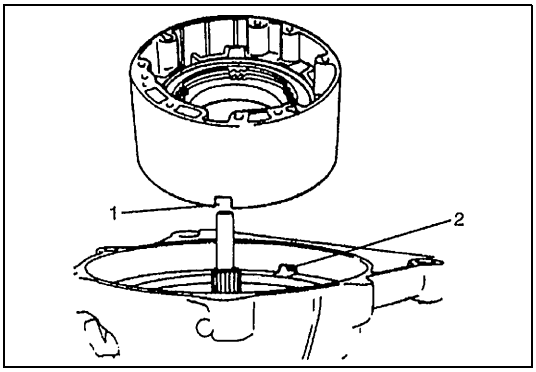

17) Install O/D case by aligning cutout in O/D case (1) and that in transmission case.

NOTE:

Use care not to drop thrust rear race installed to O/D case.

2. Cutout in automatic transmission

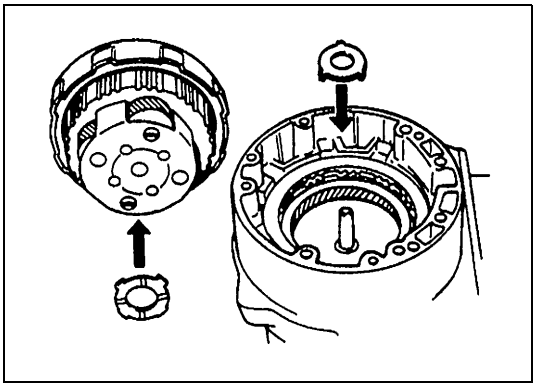

18) Apply grease to thrust planetary rear washer and install it to O/D planetary gear. Also apply grease to thrust planetary ring front race and install it to planetary ring gear and then install O/D input shaft assembly to O/D case.

NOTE:

- **Fit claws of thrust planetary rear washer and thrust planetary ring front race into holes securely.**
- **Use care not to drop thrust planetary rear washer installed to O/D planetary gear.**

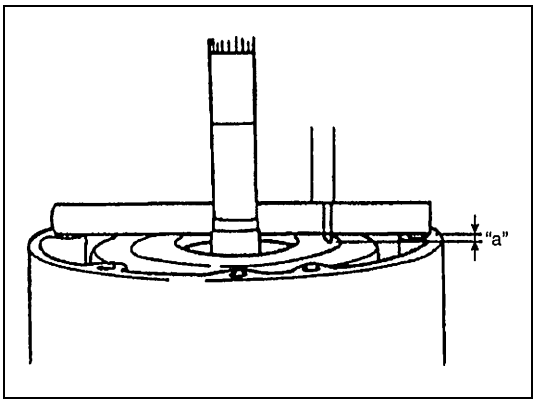

19) When clutch disc or plate has been replaced, check height difference between O/D case and O/D clutch cylinder by measuring it as shown in the figure.

Standard height difference "a" between O/D case and O/D clutch cylinder: About 3.5 mm (0.138 in.)

NOTE:

Measure at the highest point along inner circumference of O/D clutch cylinder.

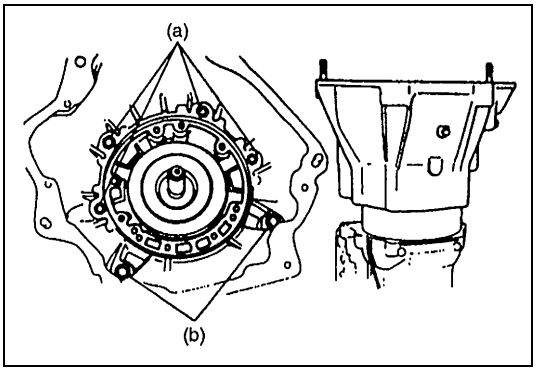

20) Apply A/T fluid to new housing O-ring and install it to O/D case.
Then install converter housing and tighten housing bolt to specified torque.

Tightening torque
Torque converter housing bolt
(a): 35 N·m (3.5 kg-m, 25.5 lb-ft)
Torque converter housing bolt
(b): 58 N·m (5.8 kg-m, 42.0 lb-ft)

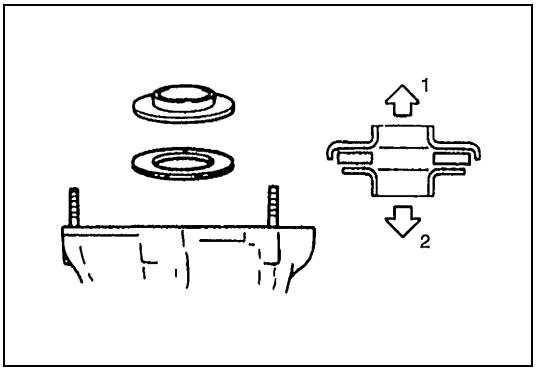

21) Apply grease to thrust front race and install it to O/D clutch cylinder.

1.	Oil pump side
2.	Over drive clutch cylinder side

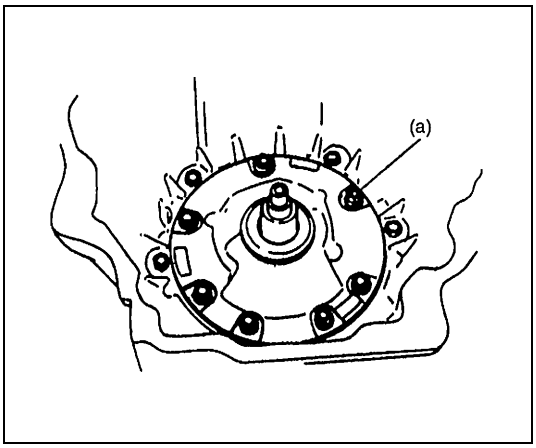

22) Apply grease to front bearing assembly and install it to oil pump assembly. Also, apply A/T fluid to new oil pump cover O-ring and install it to oil pump assembly. Then install oil pump assembly aligning bolt holes in O/D case with those in transmission case oil pump assembly. Apply seal packing to oil pump assembly bolts and tighten them by certain amount of torque at each time one after another till specified torque is attained.

Tightening torque
Oil pump bolt
(a): 22 N·m (2.2 kg-m, 16.0 lb-ft)

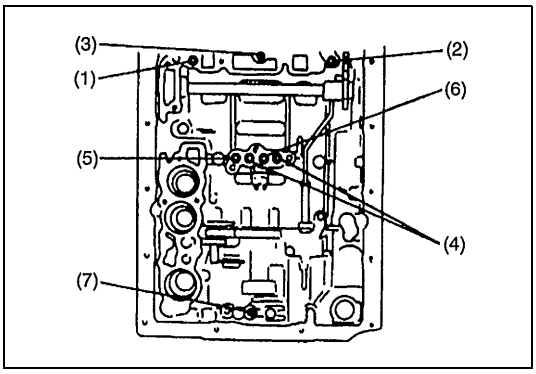

23) Apply 2 – 4 kg/cm^2 air pressure into fluid holes in the figure as numbered and check operation sound of each part.

(1)	O/D clutch
(2)	O/D brake
(3)	Forward clutch
(4)	Direct clutch
(5)	B1 brake (Second coast brake)
(6)	B2 brake (Second brake)
(7)	Reverse brake

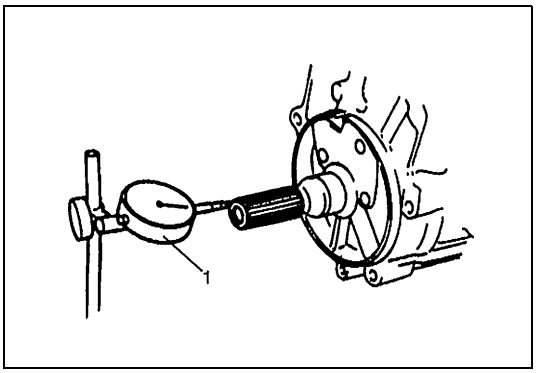

24) Take down transmission from stand and measure clearance in shaft direction by applying dial gauge (1) to output shaft as shown in the figure.

Standard clearance in shaft direction:
0.3 – 0.9 mm (0.012 – 0.035 in.)

25) Check that inner shaft runs smoothly.

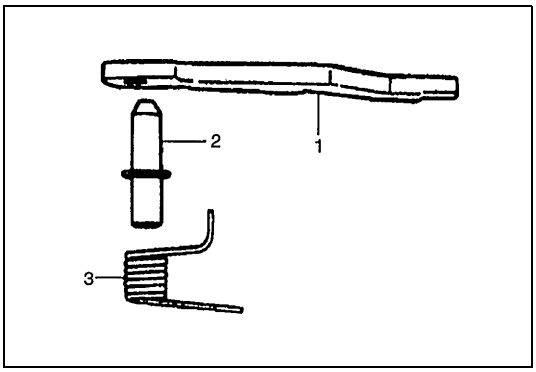

26) Install parking lock pawl (1), pawl pin (2) and pawl spring (3) to transmission case.

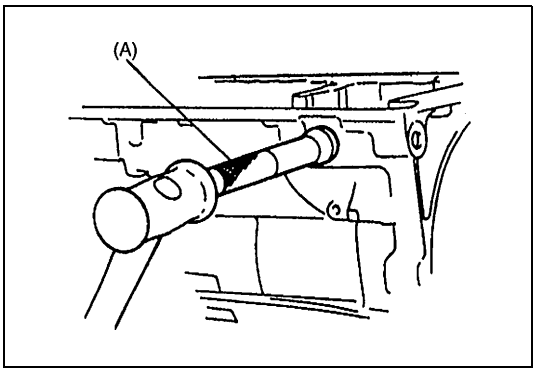

27) Apply grease to lip of new oil lip seal and drive in oil lip seal with special tool till it contacts transmission case.

Special tool
(A): 09943-88211

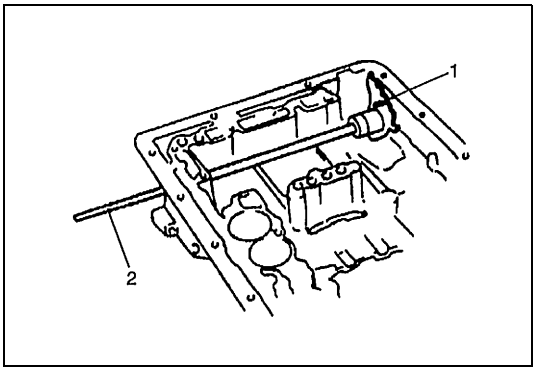

28) After installing new sleeve cover to manual shift lever (1), install manual shift shaft (2) and manual shift lever (1) to transmission case.

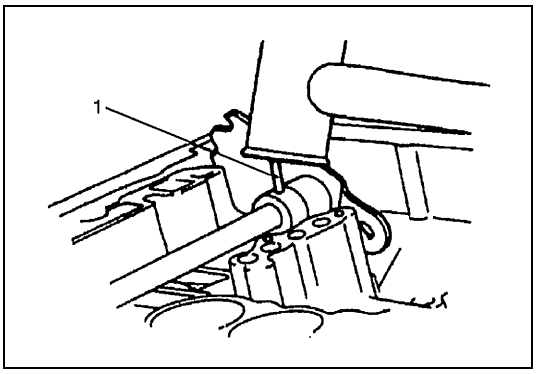

29) Align hole in manual shift shaft with that in manual shift lever and drive in new manual shift lever pin (1).

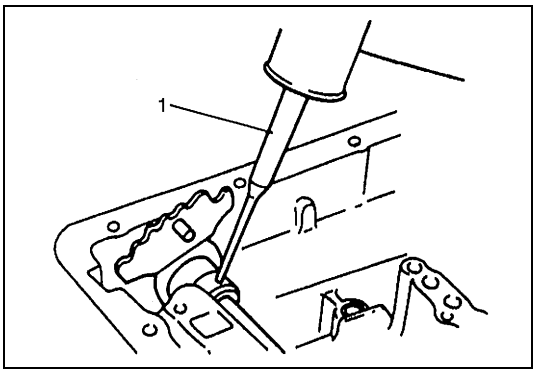

30) Align hole in sleeve cover with dent in manual shift lever and caulk securely with pin punch (1). Then check that manual shift shaft turns smoothly.

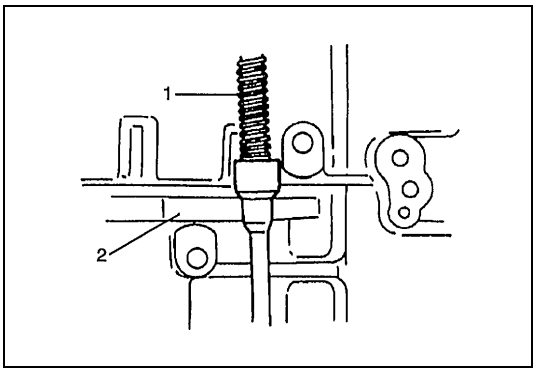

31) With parking lock rod (1) installed to manual shift lever, place parking lock rod (1) on parking lock pawl (2) as shown in the figure. Then install pawl bracket and tighten bracket screw to specified torque.

Tightening torque
Pawl bracket screw: 7.5 N·m (0.75 kg-m, 5.5 lb-ft)

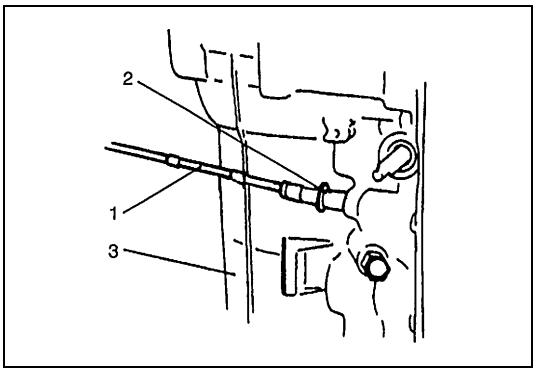

32) Apply A/T fluid to new throttle cable O-ring (2) and install it to throttle cable then connect throttle cable (1) to transmission case (3).

NOTE:

Do not turn transmission case toward position where throttle cable is connected so as to protect retainer of throttle cable.

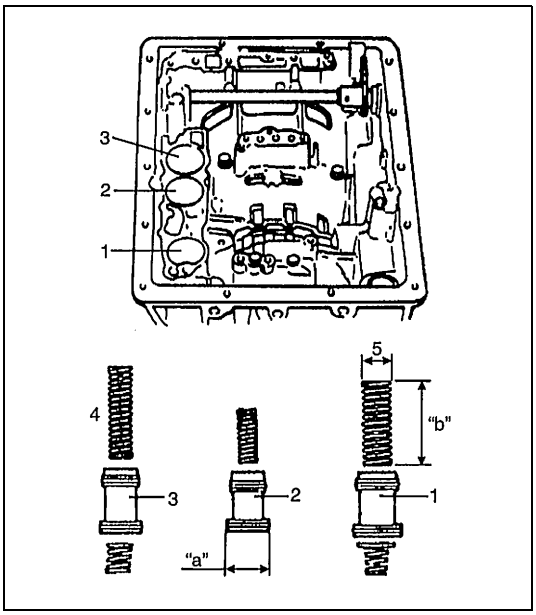

33) Apply A/T fluid to new O-ring and spring and install them to accumulator piston and install accumulator piston to transmission case.

4.	Upper spring
5.	Coil outer diameter

Accumulator piston and spring specification (G16 engine):

Used for	Piston outer diameter "a"	Spring free length "b"	
Direct clutch accumulator (2)	31.80 – 31.85 mm (1.252 – 1.254 in.)	Upper spring	61.21 mm (2.410 in.)
		Lower spring	–
Forward clutch accumulator (1)	31.80 – 31.85 mm (1.252 – 1.254 in.)	Upper spring	64.68 mm (2.546 in.)
		Lower spring	–
Second brake accumulator (3)	34.80 – 34.85 mm (1.370 – 1.372 in.)	Upper spring	55.18 mm (2.172 in.)
		Lower spring	35.13 mm (1.383 in.)

Accumulator piston and spring specification (J20 engine):

Used for	Piston outer diameter "a"	Spring free length "b"	
Direct clutch accumulator (2)	31.80 – 31.85 mm (1.252 – 1.254 in.)	Upper spring	59.82 mm (2.355 in.)
		Lower spring	–
Forward clutch accumulator (1)	31.80 – 31.85 mm (1.252 – 1.254 in.)	Upper spring	64.68 mm (2.546 in.)
		Lower spring	–
Second brake accumulator (3)	34.80 – 34.85 mm (1.370 – 1.372 in.)	Upper spring	55.18 mm (2.172 in.)
		Lower spring	35.13 mm (1.383 in.)

Accumulator piston and spring specification (H25 engine):

Used for	Piston outer diameter "a"	Spring free length "b"	
Direct clutch accumulator (2)	31.80 – 31.85 mm (1.252 – 1.254 in.)	Upper spring	38.00 mm (1.496 in.)
		Lower spring	30.00 mm (1.181 in.)
Forward clutch accumulator (1)	31.80 – 31.85 mm (1.252 – 1.254 in.)	Upper spring	57.18 mm (2.251 in.)
		Lower spring	30.50 mm (1.201 in.)
Second brake accumulator (3)	34.80 – 34.85 mm (1.370 – 1.372 in.)	Upper spring	56.16 mm (2.211 in.)
		Lower spring	18.50 mm (0.728 in.)

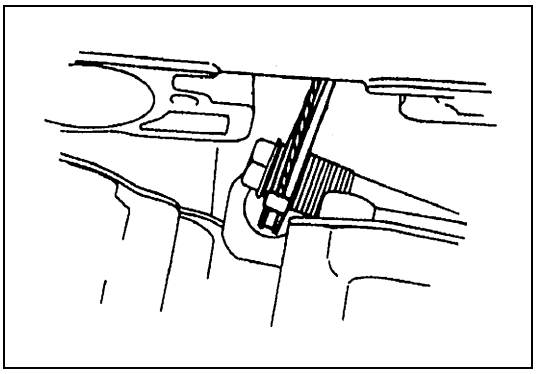

34) Lift valve body a little and install nipple of throttle cable to throttle valve cam.

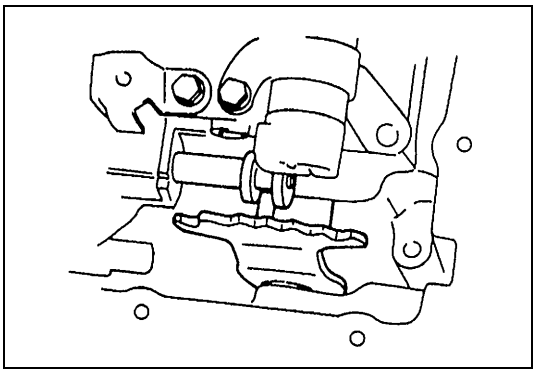

35) After confirming that accumulator piston is pushed all the way down, match pin of manual shift lever with groove in manual valve.

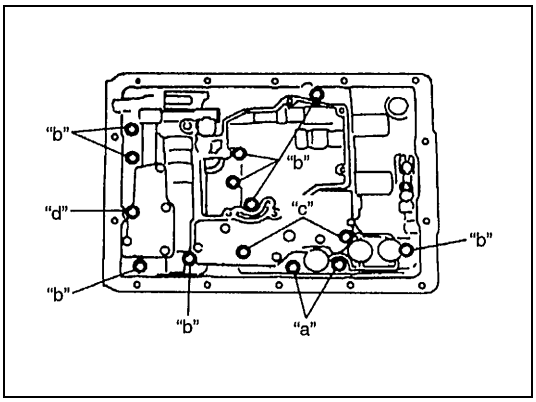

36) Fix valve body by using bolts with each nominal length as shown in the figure and tightening to specified torque.

Tightening torque
Valve body bolt: 10 N·m (1.0 kg-m, 7.5 lb-ft)

Valve body bolt nominal length:
"a": 25 mm (0.98 in.)
"b": 30 mm (1.18 in.)
"c": 47 mm (1.85 in.)
"d": 60 mm (2.36 in.)

37) Install new gaskets, oil screen spacer and oil screen.

Tightening torque
Oil screen bolt: 5.5 N·m (0.55 kg-m, 4.0 lb-ft)

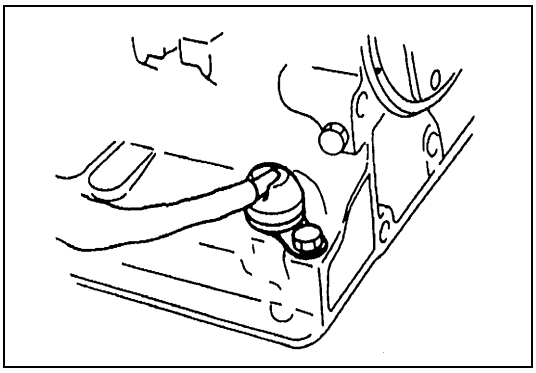

38) Lubricate new O-ring with A/T fluid and attach it to grommet of solenoid wire harness. Then connect solenoid wire harness to transmission case and fix it with solenoid wire harness clamp.
Connect each connector to solenoid. And install new gasket and brake applying cover.

Tightening torque
Brake applying cover bolt: 10 N·m (1.0 kg-m, 7.5 lb-ft)

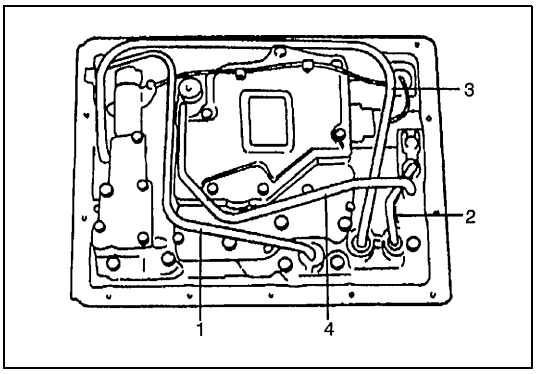

39) Using a plastic hammer, connect forward clutch applying tube (1), lubricant applying tube (2), reverse brake applying tube (3) and brake applying tube (4) in such order as shown in figure.

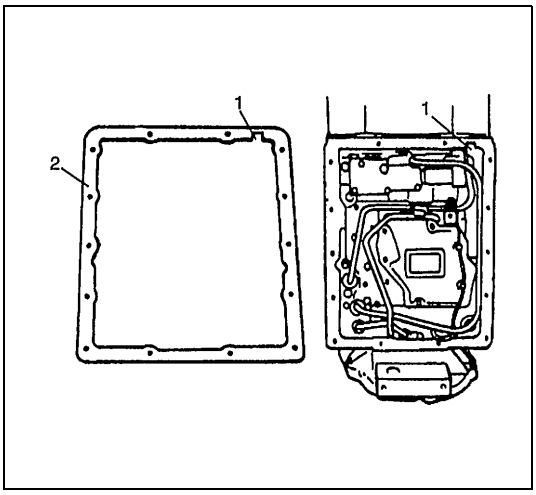

40) Install 2 oil pan magnets to transmission oil pan in such way that they do not interfere with oil tubes and install transmission oil pan with new oil pan gasket.

NOTE:

Align cutout in oil pan gasket with that in transmission case.

Tightening torque
Transmission oil pan bolt: 4.5 N·m (0.45 kg-m, 3.3 lb-ft)

1.	Cutout
2.	Oil pan gasket

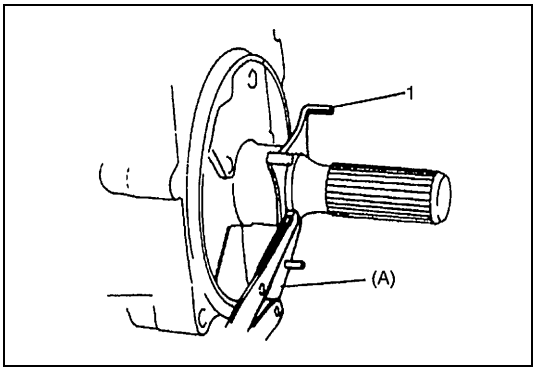

41) With wood rough key attached to output shaft, install sensor rotor by aligning its key groove with wood rough key and install C-ring by using special tool.

Special tool
(A): 09920-76010

1.	Retaining ring

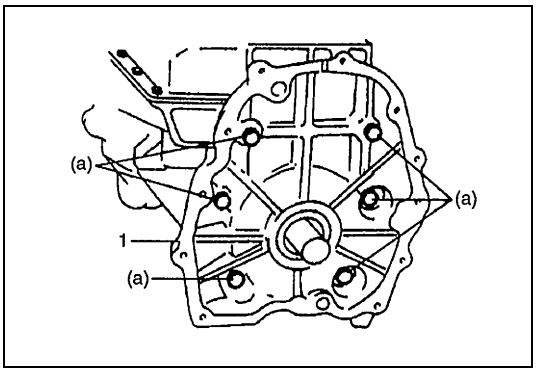

42) For G16 engine model, install adapter case (1) with new adapter gasket to transmission case and tighten adapter case bolts to specified torque.

Tightening torque
Adapter case bolt
(a): 35 N·m (3.5 kg-m, 25.5 lb-ft)

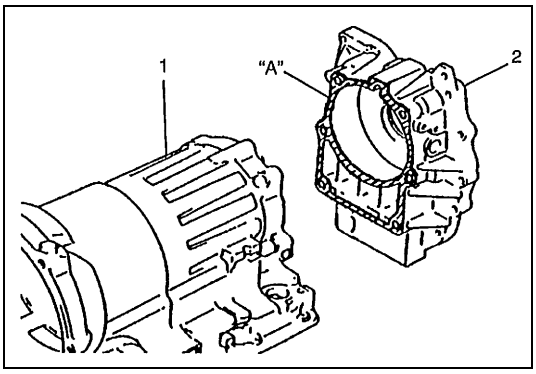

43) For J20 and H25 engines, perform the following procedures.

[J20 and H25 engines]

a) Clean mating surface of transmission case (1) and adapter case (2) and apply sealant "A" to adapter case (2).

"A" sealant: 99000-31110

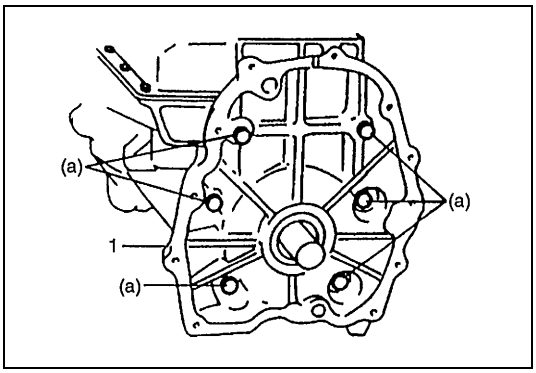

b) Tighten adapter case bolts to specified torque.

Tightening torque
Adapter case bolt
(a): 42 N·m (4.2 kg-m, 30 lb-ft)

1. Adapter case

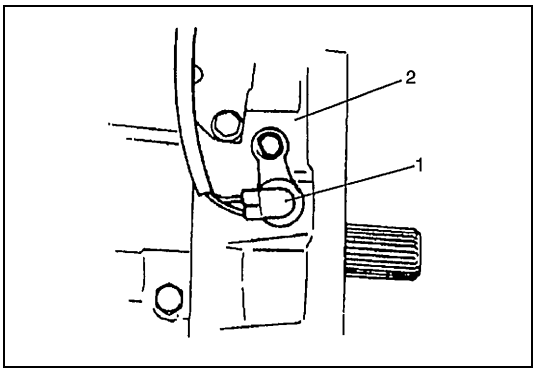

44) Apply A/T fluid to new O-ring and install it to vehicle speed sensor (1) and then install vehicle speed sensor (1) to adapter case (2).

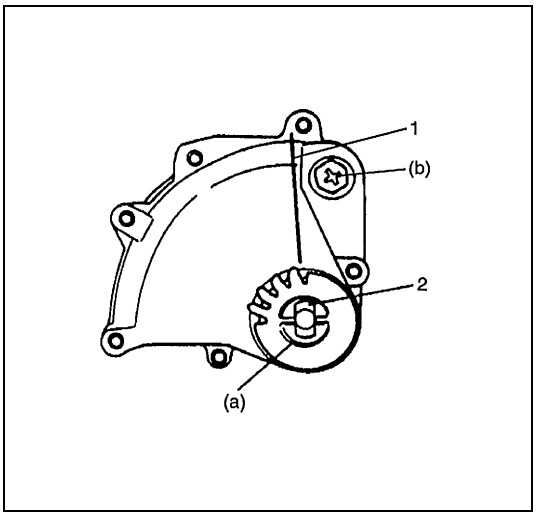

45) After turning manual shift shaft fully rearward, turn it back by 2 notches and set it to "N" range. Then install transmission range switch, lock washer and set nut and tighten set nut. After tightening it, bend claws of lock washer.

Tightening torque
Manual shift shaft set nut
(a): 4 N·m (0.4 kg-m, 3.0 lb-ft)

46) With neutral reference line (1) and cut groove (2) in switch aligned, tighten lock bolt.

Tightening torque
Transmission range switch lock bolt
(b): 5.5 N·m (0.55 kg-m, 4.0 lb-ft)

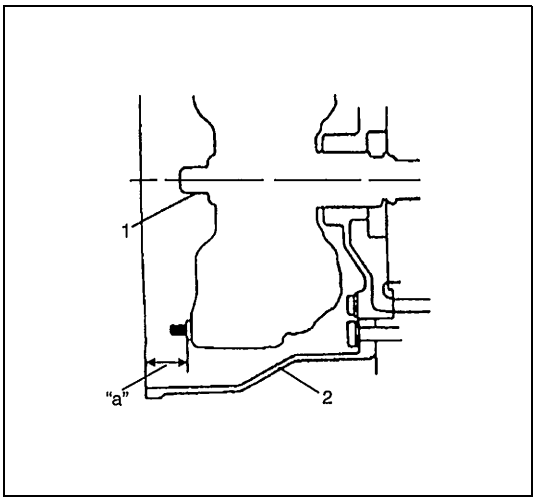

47) Confirm that torque converter is fully fitted in transmission. Confirmation can be done by measuring dimension between end surface of housing case (2) and drive plate installation seat.

Standard dimension between end surface of case housing and drive plate installation seat "a":
For G16 engine: 21.5 mm (0.85 in.)
For J20 engine: 17.3 mm (0.68 in.)
For H25 engine: 17.4 mm (0.69 in.)

48) Check that torque converter turns smoothly and apply grease to center piece (1) of torque converter.

Bearing and Race Installation Diagram

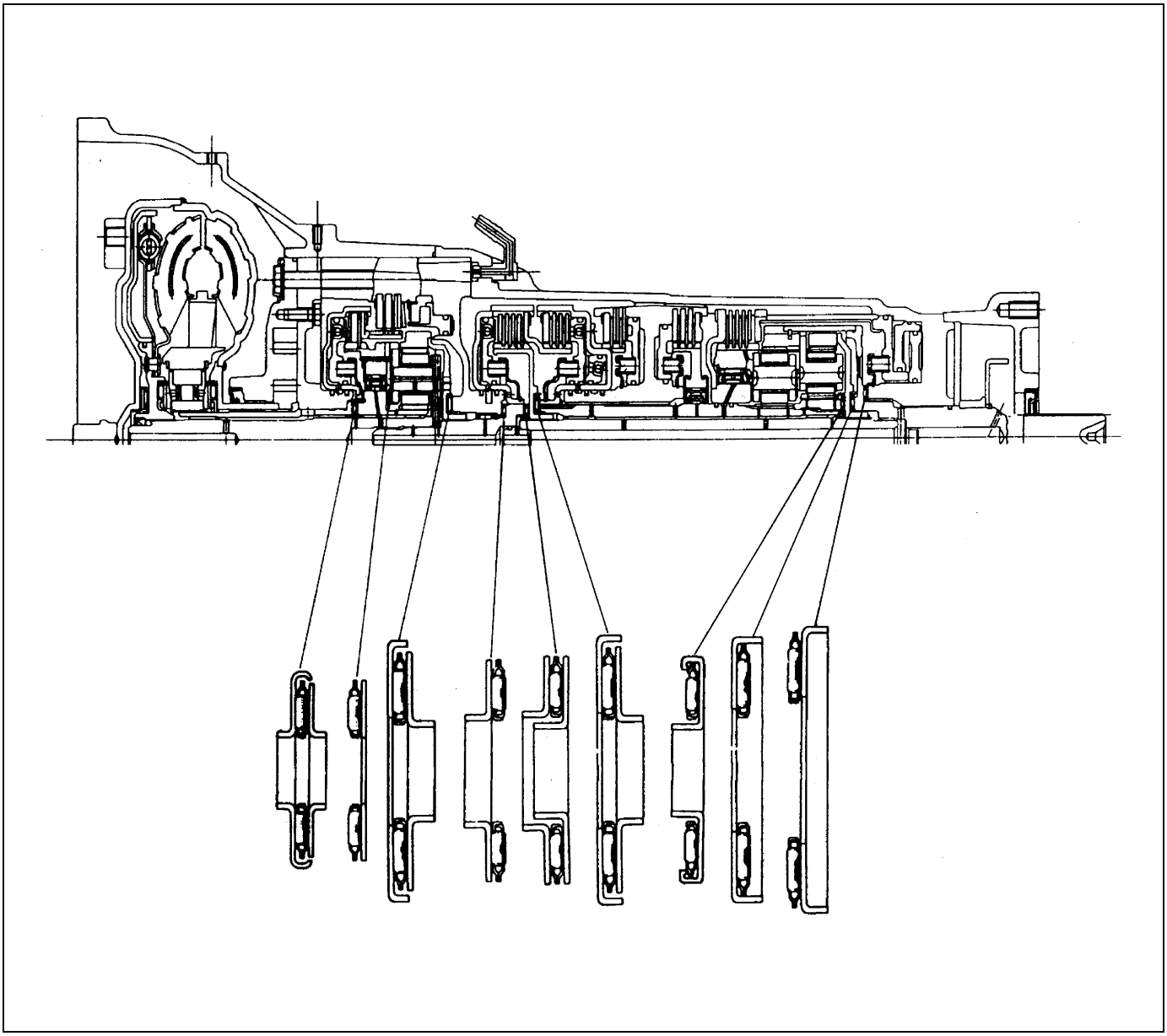

Tightening Torque Specification

Fastening part	Tightening torque		
	N•m	kg-m	lb-ft
Oil pump bolts	7.5	0.75	5.5
Upper/Lower valve body bolts	5.5	0.55	4.0
Detent spring bolt			
Throttle cam bolt	7.5	0.75	5.5
Pressure relief valve bolts	5.5	0.55	4.0
Rear upper valve body plate bolts			
Solenoid valve No.1 (Shift solenoid valve) bolts	10	1.0	7.5
Solenoid valve No.2 (TCC solenoid valve) bolts	5.5	0.55	4.0
Pressure relief valve bolt			
Lower valve body plate bolts			
TCC (Lock-up) control valve plates bolts			
Center support bolts	26	2.6	19.0
Torque converter housing bolts (a)	35	3.5	25.5
Torque converter housing bolts (b)	58	5.8	42.0
Parking lock pawl bracket screw	7.5	0.75	5.5
Valve body bolts	10	1.0	7.5
Oil screen bolts	5.5	0.55	4.0
Brake applying cover bolts	10	1.0	7.5
Oil pump assembly bolts	22	2.2	16.0
Oil pan bolts	4.5	0.45	3.3
Adapter case bolts (G16 engine)	35	3.5	25.5
Adapter case bolts (J20 and H25 engines)	42	4.2	30.0
Manual shift shaft set nut	4	0.4	3.0
Transmission range switch lock bolt	5.5	0.55	4.0
Oil pipe flare nuts	30	3.0	22.0
Oil filler tube bolt	23	2.3	17.0
Transfer to transmission bolts			
Drive plate bolts	78	7.8	56.5

Required Service Material

Material	Recommended SUZUKI product (Part Number)	Use
A/T fluid	An equivalent of DEXRON®-III	• Automatic transmission • Parts lubrication when installing
Lithium grease	SUZUKI SUPER GREASE C (99000-25030)	• Retaining parts in place when assembling • Oil seal lips • Oil pump O-ring
	SUZUKI SUPER GREASE A (99000-25010)	Cable ends
Sealant	SUZUKI BOND No. 1215 (99000-31110)	• Mating surface of transmission case

Special Tool

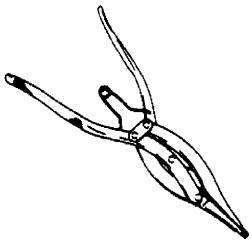 09920-76010 Snap ring opener	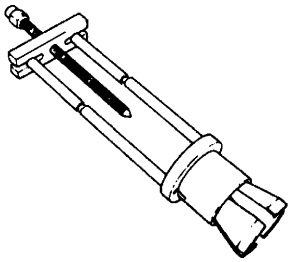 09941-84510 Bearing inner race remover	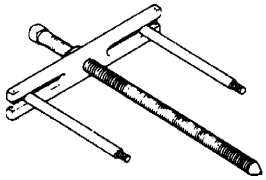 09918-48211 Oil pump remover	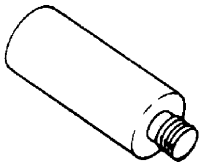 09918-48220 Oil pump remover attachment (M8)
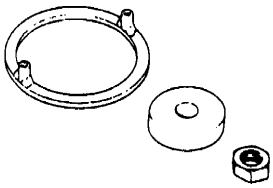 09926-98320 Spring compressor No. 1set	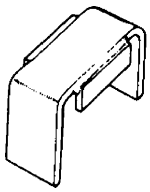 09926-98310 Clutch spring compressor	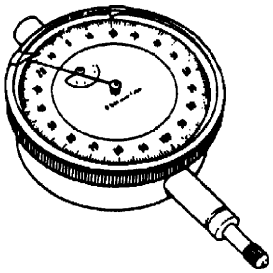 09900-20606 Dial gauge	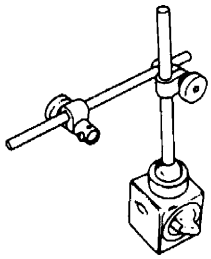 09900-20701 Magnetic stand
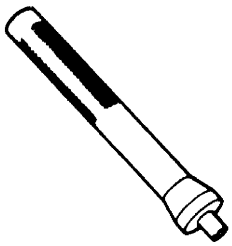 09943-88211 Bearing installer			

SECTION 7B2

AUTOMATIC TRANSMISSION (5A/T)

CONTENTS

General Description

When repairing automatic transmission, it is necessary to conduct the on-vehicle test to investigate where the cause of the trouble lies first.

Then whether overhaul should be done or not is determined. If the transmission is disassembled without such preliminary procedure, not only the cause of the trouble would be unknown, but also a secondary trouble may occur and often time would be wasted.

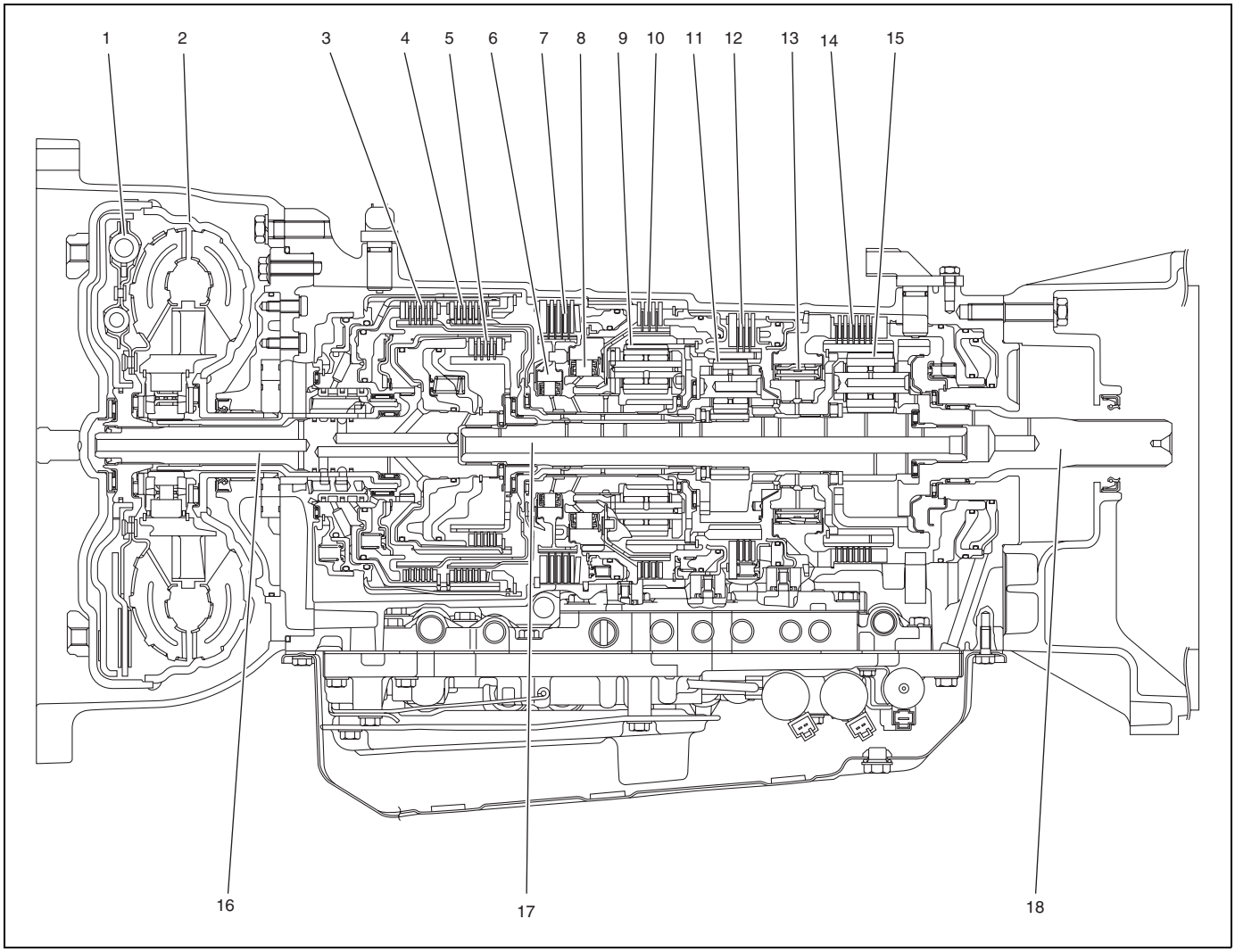

1. Torque converter clutch (TCC)	7. 2nd brake	13. One-way No.3 clutch
2. Torque converter	8. One-way No.1 clutch	14. 1st and reverse brake
3. Direct clutch	9. Front planetary gear	15. Rear planetary
4. Reverse clutch	10. No.1 brake	16. Input shaft
5. Forward clutch	11. Middle planetary gear	17. Intermediate shaft
6. One-way No.2 clutch	12. No.2 brake	18. Output shaft

Torque Converter Diagnosis

Stator Assembly Freewheels

If the stator roller clutch becomes ineffective, the stator assembly freewheels at all times in both directions. With this condition, the vehicle tends to have poor acceleration from a standstill. If poor acceleration problems are noted, what to be checked first are that the exhaust system is not blocked, the engine is running properly and the transmission is in 1st gear when starting out.

Stator Assembly Remains Locked Up

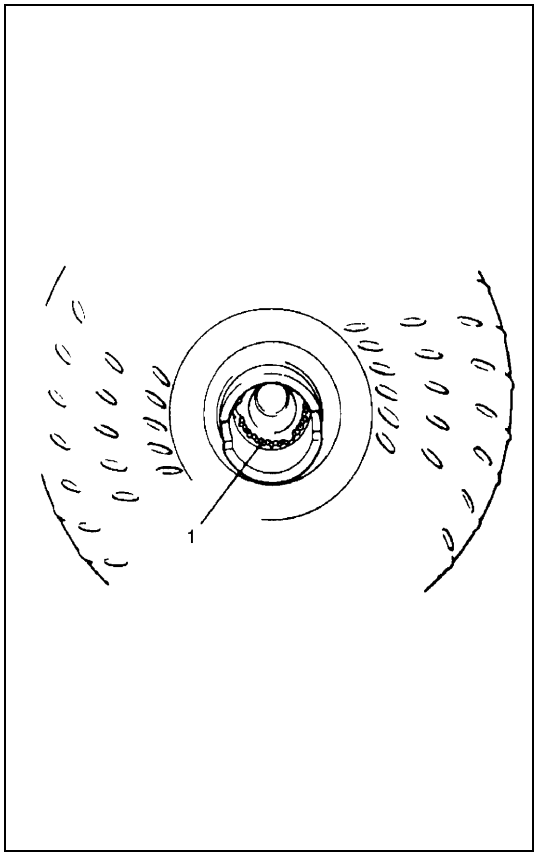

If the stator assembly remains locked up at all times, the engine rpm and vehicle speed will tend to be limited or restricted at high speeds. The vehicle performance when accelerating from a standstill will be normal. Engine overheating may be noted. Visual examination of the converter may reveal a blue color from the overheating that will result.
Under above conditions, if the converter has been removed from the transmission, the starer roller clutch can be checked by inserting a finger into the splined inner race of the roller clutch and trying to turn the race in both directions. The inner race should turn freely clockwise, but be heavy to turn counterclockwise.

NOTE:

- **Converter placed with its flange upright does not fit for this inspection.**
- **For proper checking, position converter with its flange horizontal.**
- **Turn stator inner race clockwise as quickly as possible with finger, then turn reversely at the same speed and feel difference of inertia.**

1. Stator inner race (Should turn freely clockwise only)

Do Not Replace Converter for Following Conditions:

1) The fluid has an odor, is discolored, and there is no evidence of metal particles. There is no indication of existence of internal damage, or oil pump damage. Dump out as much fluid as possible from the converter and replace only the oil pump screen in the pan.
2) A small amount of wear (sometimes referred to as fretting wear) appears on the hub where the oil pump drive gear is located. A certain amount of such wear is normal for both the hub and oil pump gear. Neither the converter nor the oil pump assembly should be replaced.

Unit Repair

Precautions

As the automatic transmission consists of high precision components, the following cautions should be strictly observed when handling its parts in disassembly and reassembly.

- Disassembling valve body assembly is prohibited in principle. However, a few parts can be disassembled. When disassembling valve body component parts, confirm whether these parts are allowed to disassemble or not referring to “Valve Body Assembly” in this section.
- Make sure to wash dirt off from the transmission so that no such dirt will enter the transmission during dismounting and remounting.
- Select a clean place free from dust and dirt for overhauling.
- Place a rubber mat on the work bench to protect parts from damage.
- Work gloves or shop cloth should not be used. (Use nylon cloth or paper towel.)
- When separating the case joint, do not pry with a screwdriver or such but tap with a plastic hammer lightly.
- Make sure to wash dirt off from the transmission so that no such dirt will enter the transmission during disassembly and reassembly.
- Wash the disassembled parts in ATF (Automatic Transmission Fluid) or kerosene (using care not to allow ATF or kerosene to get on your face, etc.) and confirm that each fluid passage is not clogged by blowing air into it. But use ATF to wash the disc, resin washers and rubber parts.
- Replace each gasket, oil seal and O-ring with a new one.
- Apply ATF to sliding or rotating parts before reassembly.
- A new disc should be soaked in ATF at least 15 hours before use.

Part Inspection and Correction Table

Part	Inspect for	Correction
Casted part, machined part	Small flaw, burr	Remove with oil stone.
	Deep or grooved flaw	Replace part.
	Clogged fluid passage	Clean with air or wire.
	Flaw on installing surface, residual gasket	Remove with oil stone or replace part.
	Crack	Replace part.
Bearing	Unsmooth rotation	Replace.
	Streak, pitting, flaw, crack	Replace.
Bushing, thrust washer	Flaw, burr, wear, burning	Replace.
Oil seal, gasket	Flawed or hardened seal ring	Replace.
	Worn seal ring on its periphery or side	Replace.
	Piston seal ring, oil seal, gasket, etc.	Replace.
Gear	Flaw, burr	Replace.
	Worn gear tooth	Replace.
Splined part	Burr, flaw, torsion	Correct with oil stone or replace.
Snap ring	Wear, flaw, distortion	Replace.
	No interference	Replace.
Thread	Burr	Replace.
	Damage	Replace.
Spring	Settling, sign of burning	Replace.
Clutch disc, brake disc	Wear, burning, distortion, damaged claw	Replace.
Clutch plate, brake plate	Wear, burning, distortion, damaged claw	Replace.
Sealing surface (where lip contacts)	Flaw, rough surface, stepped wear, foreign material	Replace.

Unit Disassembly

CAUTION:

- **Keep component parts in group for each subassembly and avoid mixing them up.**
- **Clean all parts with cleaning solvent thoroughly and air dry them.**
- **Use kerosene or automatic transmission fluid as cleaning solvent.**
- **Do not use wiping cloths or rags to clean or dry parts.**
- **All oil passages should be blown out and checked to make sure that they are not obstructed.**
- **Keep face and eyes away from solvent spray while air blowing parts.**
- **Check mating surface for irregularities and remove them, if any, and clean it again.**
- **Soak new clutch discs and brake discs in transmission fluid for at least 15 minutes before assembly.**
- **Replace all gaskets and O-rings with new ones.**
- **Apply automatic transmission fluid to all O-rings.**
- **When installing seal ring, be careful so that it is not expanded excessively, extruded or caught.**
- **Replace oil seals that are removed and apply grease to their lips.**
- **Before installing, be sure to apply automatic transmission fluid to sliding, rolling and thrusting surface of all component parts. Also after installation, make sure to check each part for proper operation.**
- **Always use torque wrench when tightening bolts.**

Components

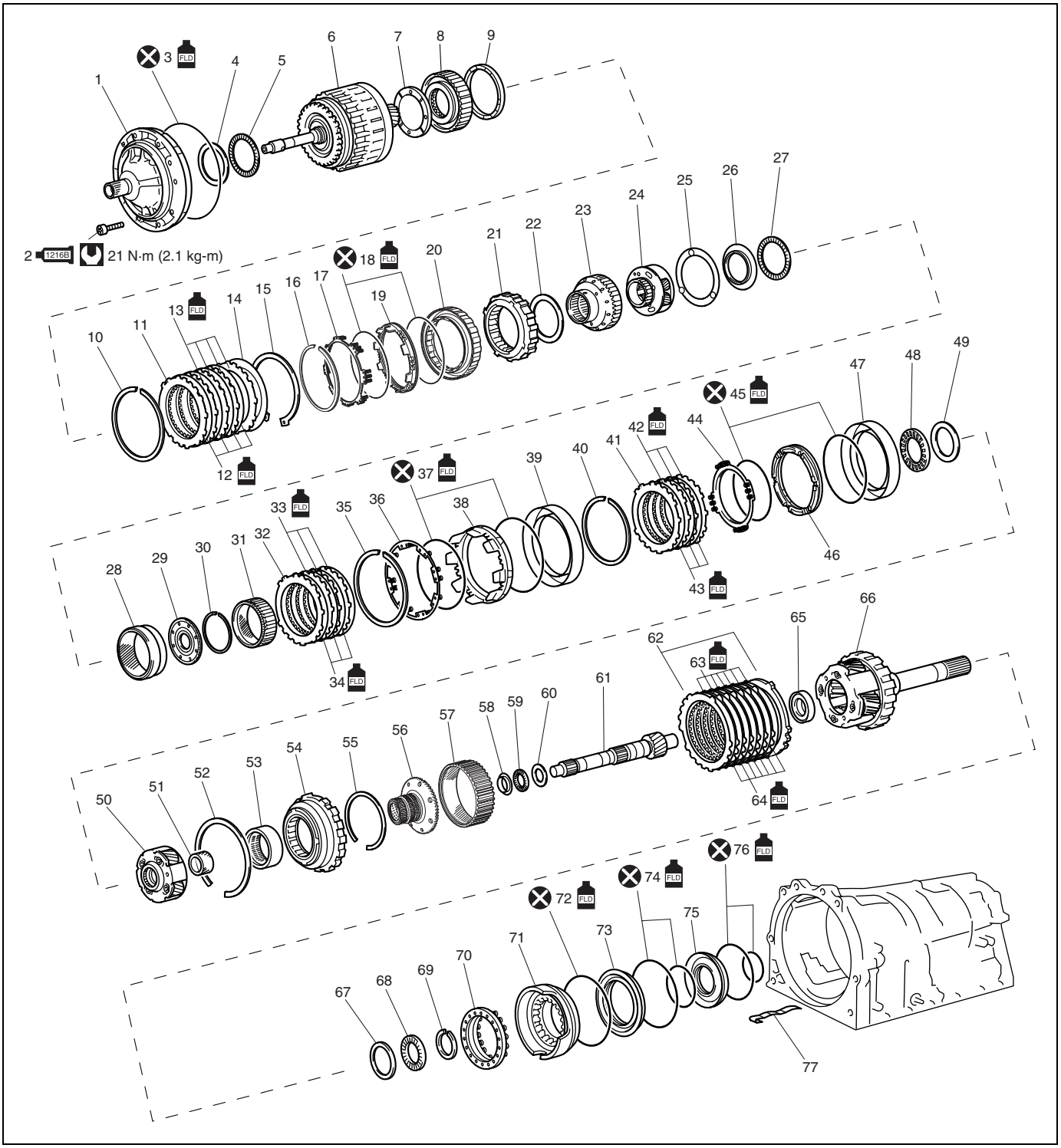
1
2 1216B 21 N·m (2.1 kg-m)
3 FLD
4
5
6
7
8
9
10
11
12 FLD
13 FLD
14
15
16
17
18 FLD
19
20
21
22
23
24
25
26
27
28
29
30
31
32
33 FLD
34 FLD
35
36
37 FLD
38
39
40
41
42 FLD
43 FLD
44
45 FLD
46
47
48
49
50
51
52
53
54
55
56
57
58
59
60
61
62
63 FLD
64 FLD
65
66
67
68
69
70
71
72 FLD
73
74 FLD
75
76 FLD
77

1. Oil pump assembly	28. Front planetary ring gear	55. Snap ring
2. Oil pump bolt	29. Front planetary ring gear flange	56. Rear planetary flange
3. O-ring	30. Snap ring	57. Rear planetary ring gear
4. Thrust bearing race No.1	31. Middle planetary ring gear	58. Thrust bearing race No.7
5. Thrust needle roller bearing	32. No.1 brake flange	59. Thrust needle roller bearing
6. Clutch drum and input shaft assembly	33. No.1 brake disc	60. Thrust bearing race No.8
7. Clutch drum thrust washer No.2	34. No.1 brake plate	61. Intermediate shaft
8. One-way No.2 clutch assembly	35. Snap ring	62. 1st & reverse (No.4) brake flange
9. Clutch hub thrust washer	36. No.1 brake piston return spring	63. 1st & reverse (No.4) brake disc
10. Snap ring	37. O-ring	64. 1st & reverse (No.4) brake plate
11. 2nd (No.3) brake flange	38. No.1 brake piston	65. Thrust needle roller bearing
12. 2nd (No.3) brake disc	39. No.1 brake cylinder	66. Rear planetary gear assembly
13. 2nd (No.3) brake plate	40. Snap ring	67. Thrust bearing race No.9
14. 2nd (No.3) brake cushion plate	41. No.2 brake flange	68. Thrust needle roller bearing
15. Snap ring	42. No.2 brake disc	69. Snap ring
16. Snap ring	43. No.2 brake plate	70. 1st & reverse (No.4) brake return spring
17. 2nd (No.3) brake return spring	44. No.2 brake piston return spring	71. 1st & reverse (No.4) brake piston
18. O-ring	45. O-ring	72. O-ring
19. 2nd (No.3) brake piston	46. No.2 brake piston	73. Brake reaction sleeve
20. 2nd (No.3) brake cylinder	47. No.2 brake cylinder	74. O-ring
21. One-way No.1 clutch assembly	48. Thrust needle roller bearing	75. 1st & reverse (No.4) brake inner piston
22. Planetary carrier thrust washer No.1	49. Thrust bearing race No.4	76. O-ring
23. One-way No.1 clutch inner race	50. Middle planetary gear assembly	77. Brake plate stopper spring
24. Front planetary gear assembly	51. Planetary sun gear	: Tightening torque
25. Planetary carrier thrust washer No.2	52. Snap ring	: Do not reuse.
26. Thrust bearing race No.3	53. One-way No.3 clutch inner race	FLD : Apply A/T fluid
27. Thrust needle roller bearing	54. One-way No.3 clutch assembly	1216B : Apply sealant 99000-31230 to bolt flange

Disassembly

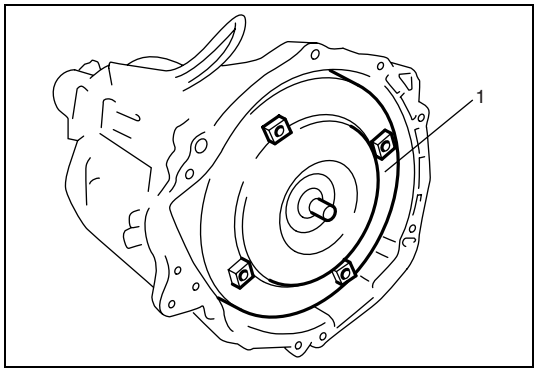

1) Extract torque converter (1) from transmission.

CAUTION:

Remove torque converter as much straight as possible. Leaning it may cause to damage oil seal lip.

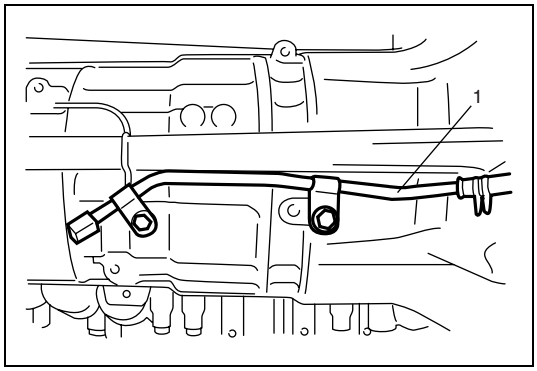

2) Remove breather pipe (1) from transmission.

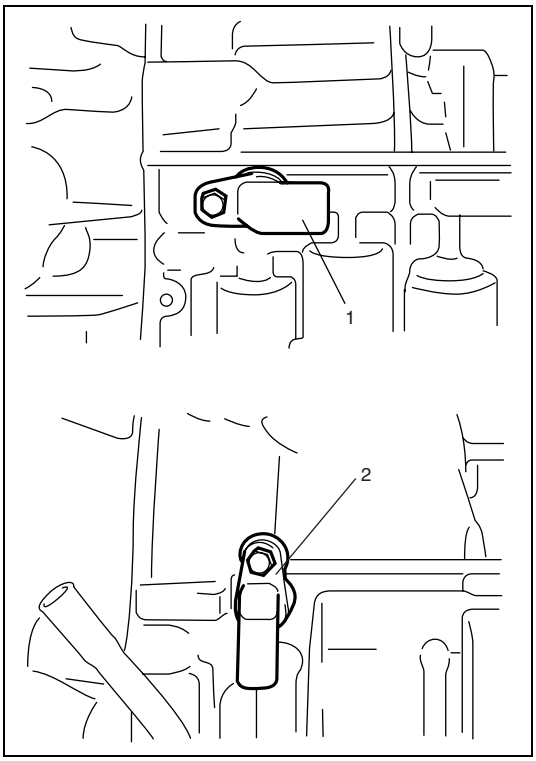

3) Remove output shaft speed sensor (1) and input shaft speed sensor (2).

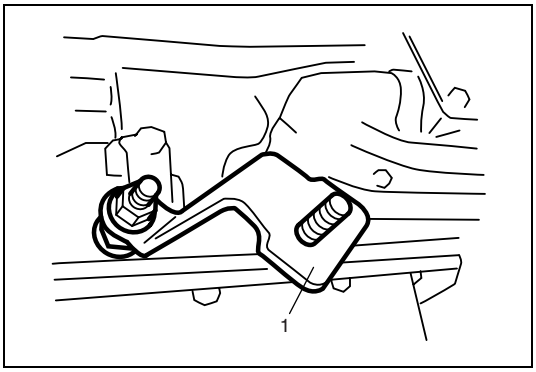

4) Remove the nut, the washer and manual select lever (1).

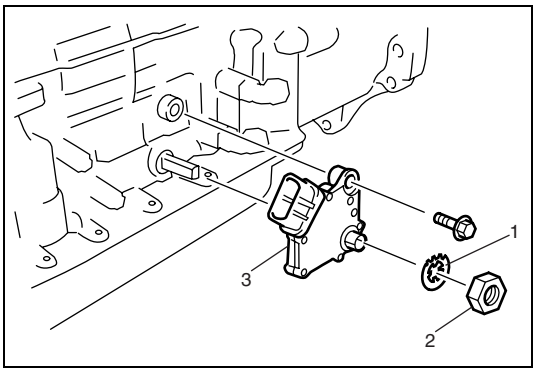

5) Unbend bend parts of lock washer (1) and then remove manual shift shaft nut (2), lock washer and grommet.
6) Remove transmission range sensor (3) by removing sensor bolt.

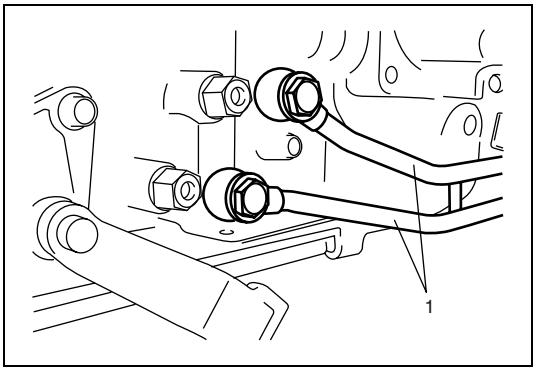

7) Remove oil cooler pipes (1) from transmission.

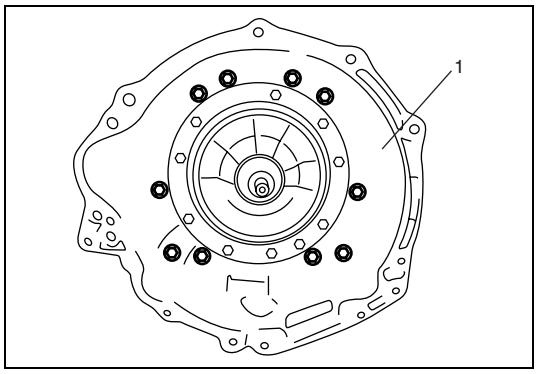

8) Remove converter housing (1) by removing 10 bolts.

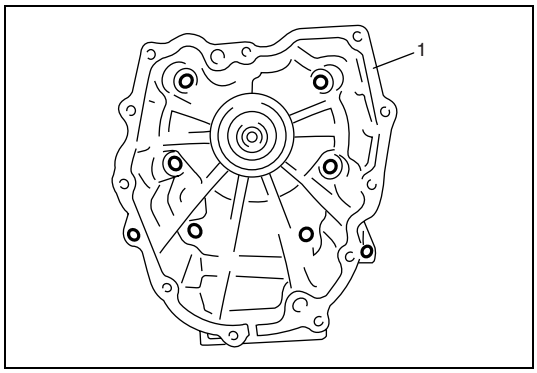

9) Remove transmission case adapter (1) by removing 8 bolts.

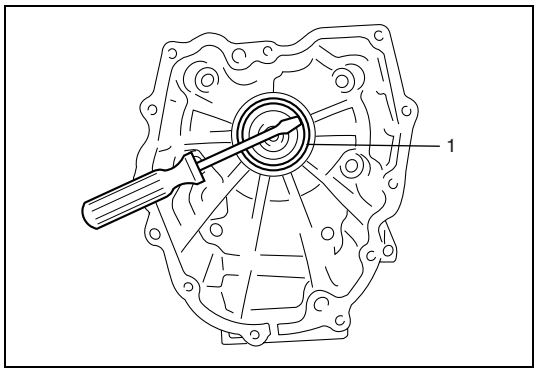

10) Remove transmission case adaptor oil seal (1) by using flat end rod or the like.

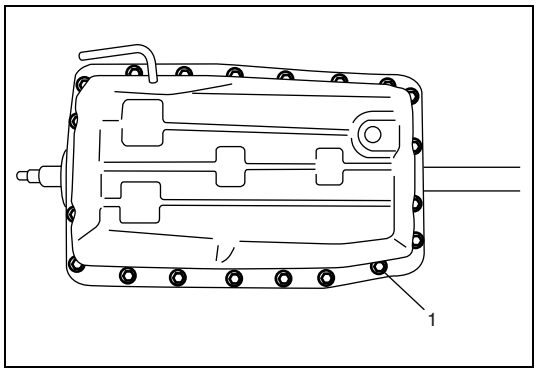

11) Remove oil pan bolts (1).
12) Remove oil pan and oil pan gasket from transmission case.

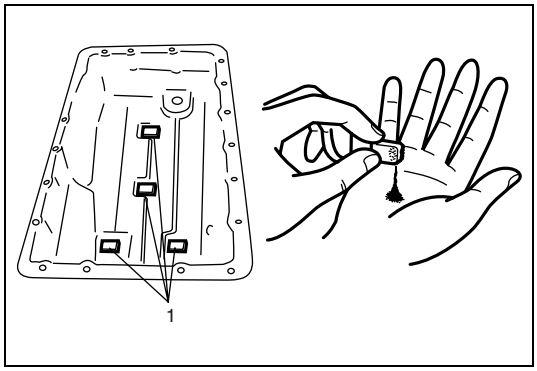

13) Remove the 4 magnets (1) and clean them to steel particles etc.

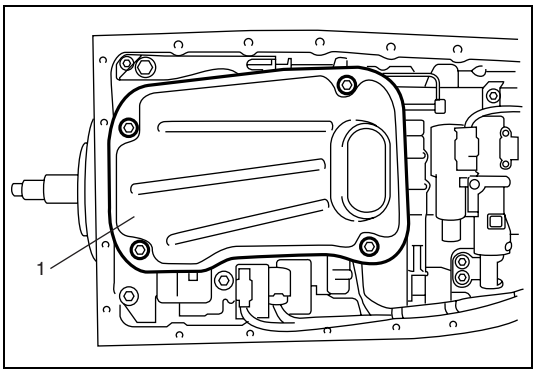

14) Remove oil strainer (1) from valve body assembly.

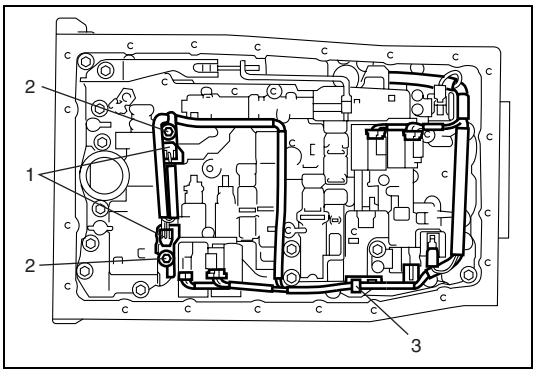

15) Remove transmission fluid temperature sensors (1) from sensor clamps (2).
16) Remove wire harness clamp (3).
17) Disconnect the following connectors from shift solenoid-A, shift solenoid-B, shift solenoid-E, TCC solenoid, pressure control solenoid-A, pressure control solenoid-B and pressure control solenoid-C.

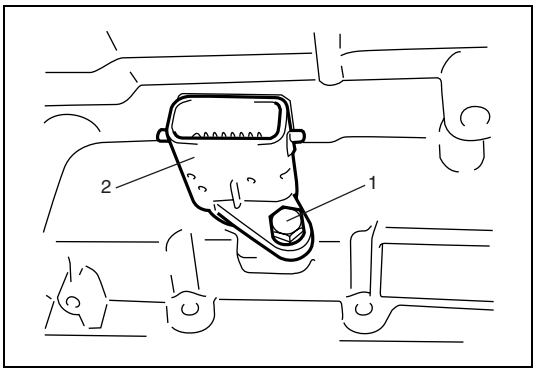

18) After removing bolt (1) pull out transmission wire connector (2) from transmission case.

CAUTION:
When pulling transmission wire harness out of transmission case, take care not to damage connectors and transmission fluid temperature sensors at narrow exit of case.

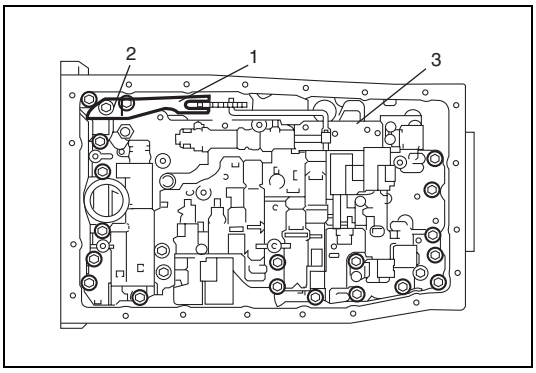

19) Remove spring plate (1) and manual shift lever spring (2).
20) Remove valve body assembly (3) by removing19 bolts.

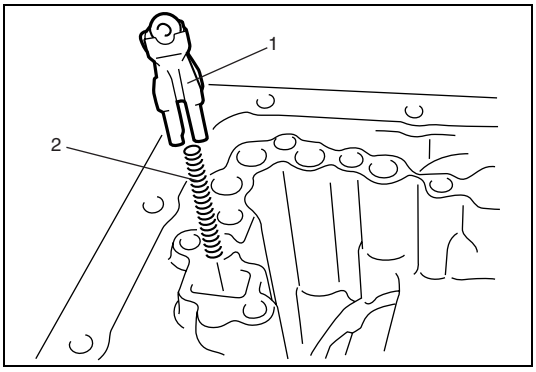

21) Remove check ball body (1) and spring (2).

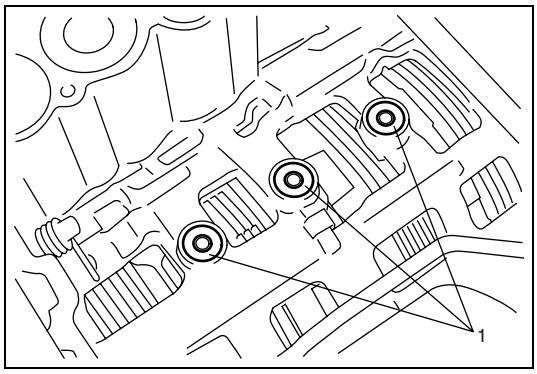

22) Remove transmission case gaskets (1).

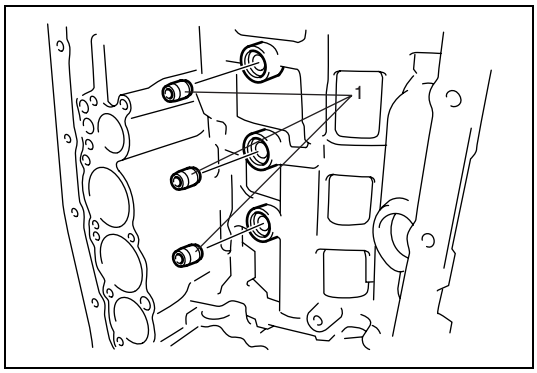

23) Remove brake drum gaskets (1) from transmission case.

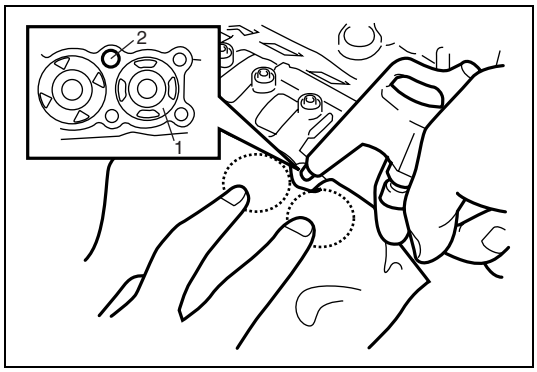

24) Remove direct clutch accumulator piston (1) by compressed air (392 kPa, 4.0 kg/cm^2, 57 psi) into hole (2).

NOTE:

Cover accumulator piston (1) with shop cloth while blowing because A/T fluid should be spattered.

25) Remove direct clutch accumulator piston spring from transmission case.

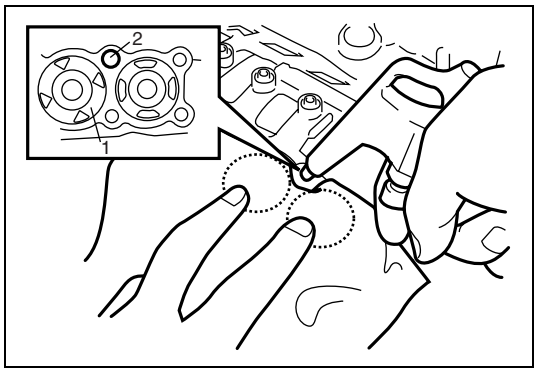

26) Remove 2nd (No.3) brake accumulator piston (1) by compressed air (392 kPa, 4.0 kg/cm^2, 57 psi) into hole (2).

NOTE:

Cover accumulator piston (1) with shop cloth while blowing because A/T fluid should be spattered.

27) Remove 2nd (No.3) brake accumulator piston spring from transmission case.

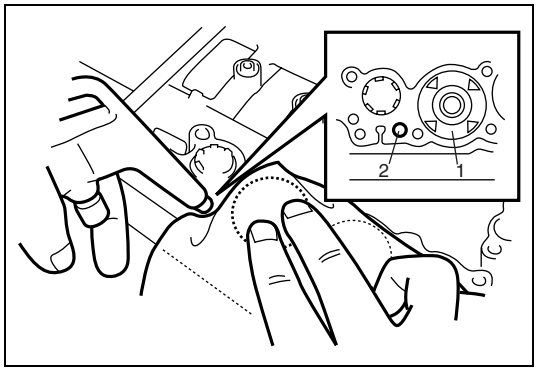

28) Remove reverse clutch accumulator piston (1) by compressed air (392 kPa, 4.0 kg/cm^2, 57 psi) into hole (2).

NOTE:

Cover accumulator piston (1) with shop cloth while blowing because A/T fluid should be spattered.

29) Remove reverse clutch accumulator piston springs from transmission case.

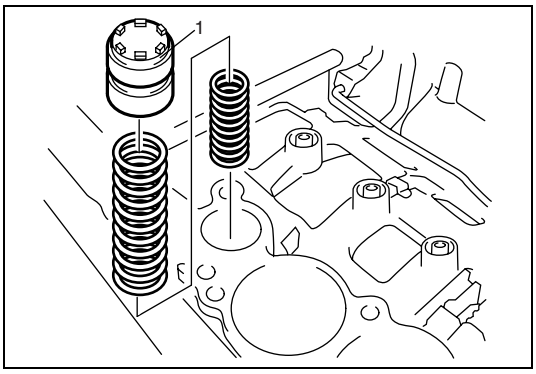

30) Remove forward clutch accumulator piston (1).
31) Remove forward clutch accumulator piston springs from transmission case.

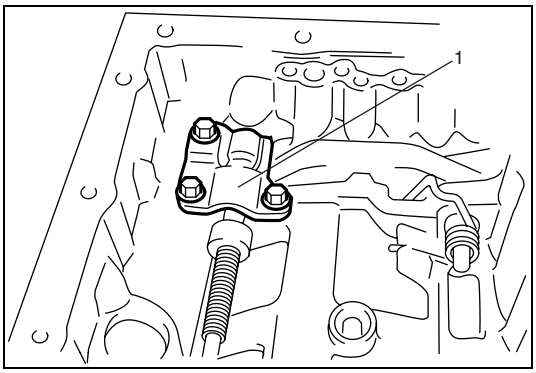

32) Remove parking pawl bracket (1).

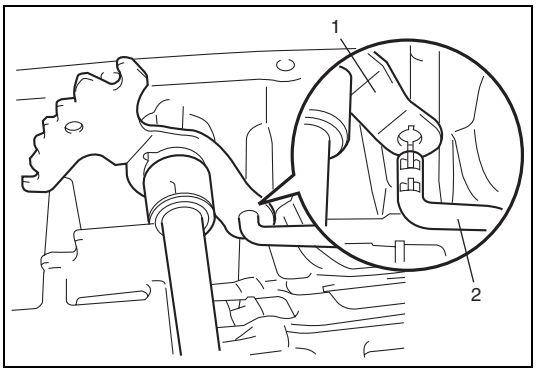

33) Remove parking lock rod (2) from manual shift lever (1).

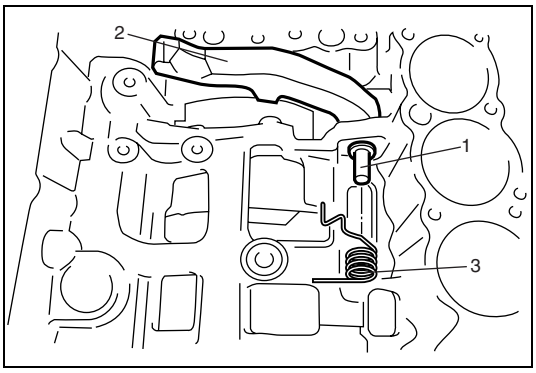

34) Pull out parking pawl pin (1) to oil pump side and then remove parking lock pawl (2) and parking pawl spring (3).

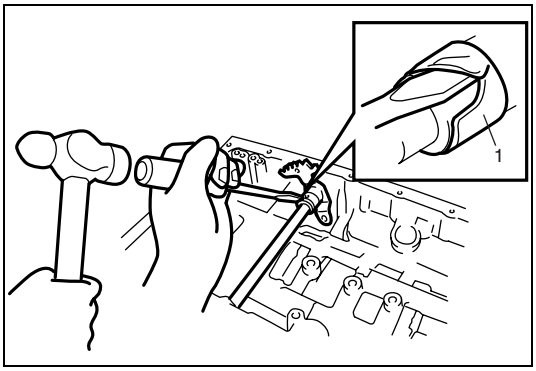

35) Remove manual shift shaft and lever as follows.
   a) Undo caulking of sleeve cover (1) by using flat end rod or the like and hammer.

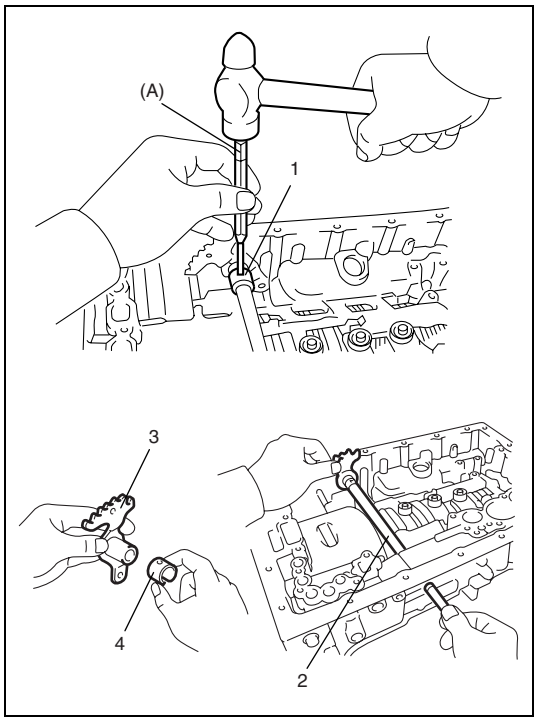

b) Drive out manual shift lever pin (1) by using special tool and hammer.

Special tool
(A) : 09922-89810

c) Pull out manual shift shaft (2) from transmission case, and then remove manual shift lever (3) and sleeve cover (4).

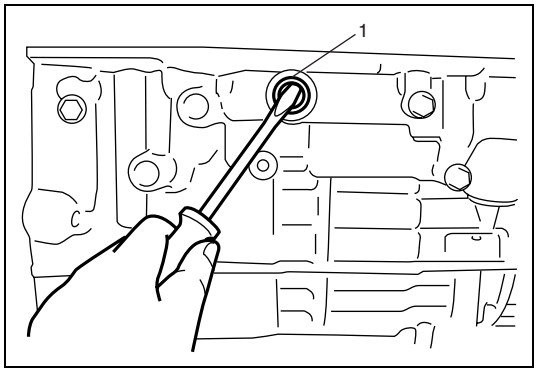

36) Remove 2 manual shift shaft oil seals (1) from transmission case by using flat end rod or the like.

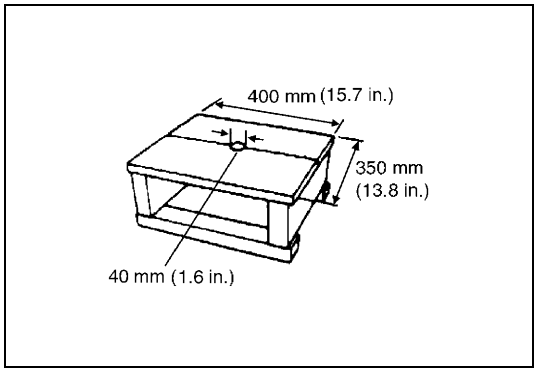

37) Place transmission on stand facing oil pump upward.

NOTE:

- **To prevent transmission case from getting damaged, protect its contacting surface with stand by using shop cloth or the like.**
- **A stand of such size as shown in the figure will facilitate work.**

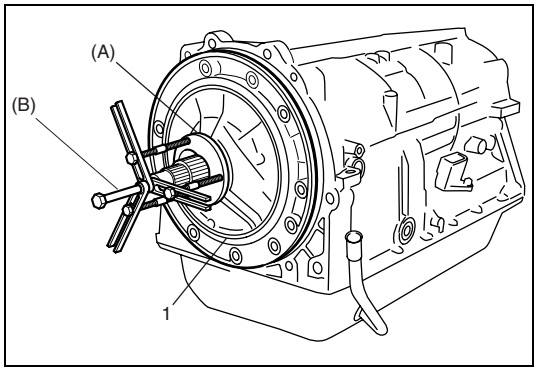

38) After removing oil pump bolts, remove oil pump assembly (1) by using special tool.

Special tool
(A) : 09927-66520
(B) : 09920-13120

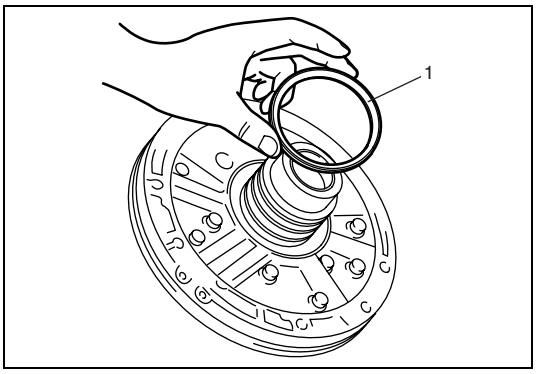

39) Remove thrust bearing race No.1 (1) from oil pump assembly.

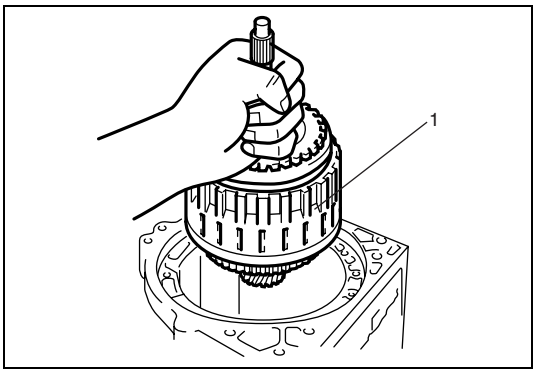

40) Remove clutch drum and input shaft assembly (1) from transmission case.

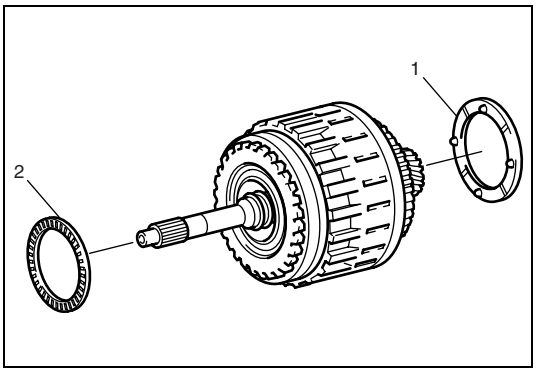

41) Remove clutch hub thrust washer (1) and thrust needle roller bearing (2) from clutch drum and input shaft assembly.

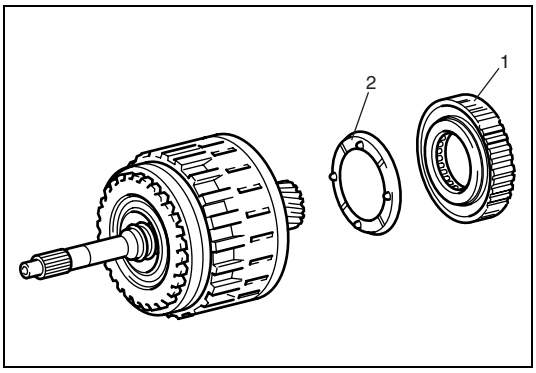

42) Remove one-way No.2 clutch assembly (1) and clutch drum thrust washer No.2 (2) from clutch drum & input shaft assembly.

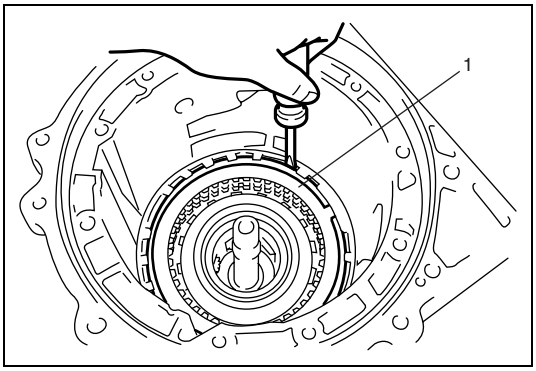

43) Remove snap ring (1) by using flat end rod or the like.

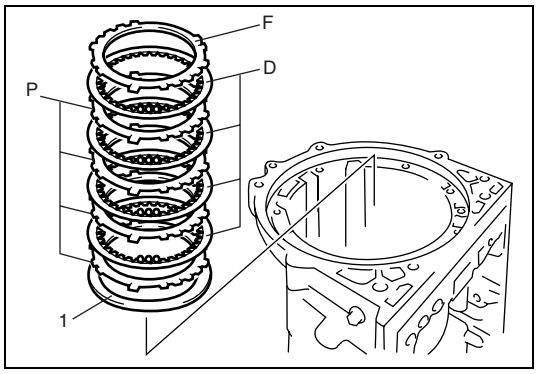

44) Remove 2nd (No.3) brake flange “F”, 2nd (No.3) brake discs “D”, 2nd (No.3) brake plates “P” and 2nd (No.3) brake cushion plate (1) from transmission case.

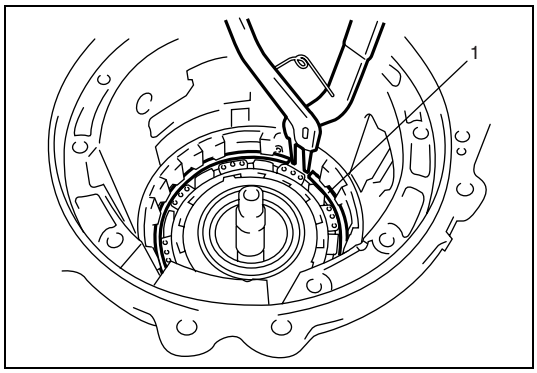

45) Remove snap ring (1) by using special tool.

Special tool
(A) : 09900-06108

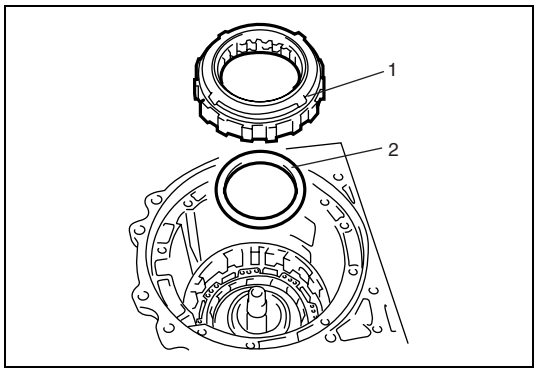

46) Remove one-way No.1 clutch assembly (1) and planetary carrier thrust washer No.1 (2) from transmission case.

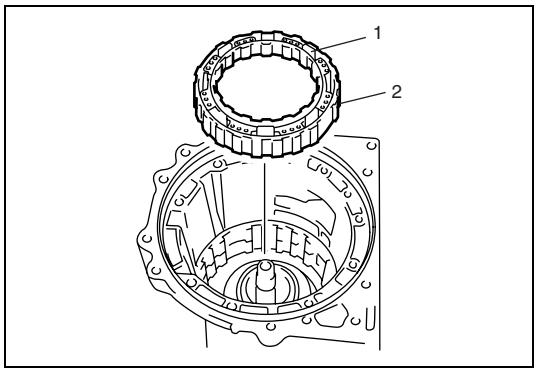

47) Remove 2nd (No.3) brake piston (1) including 2nd (No.3) brake cylinder (2) from transmission case.

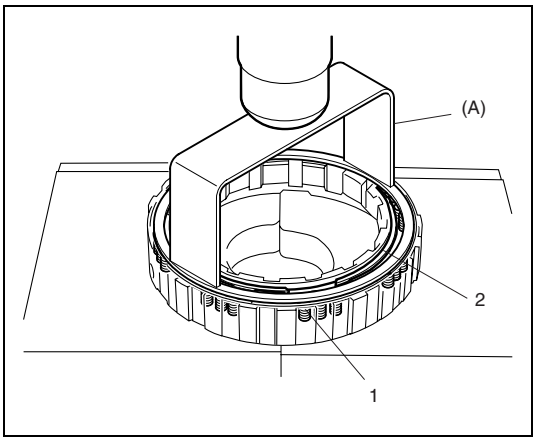

48) Compress 2nd (No.3) brake return spring (1) until 2nd (No.3) brake return spring is lowered to the place 1 – 2 mm (0.039 – 0.078 in.) from the snap ring groove by using special tool and then remove snap ring (2).

CAUTION:
Be careful when applying pressure, for overpressure will cause 2nd (No.3) brake return spring to deform.

Special tool
(A) : 09927-66540

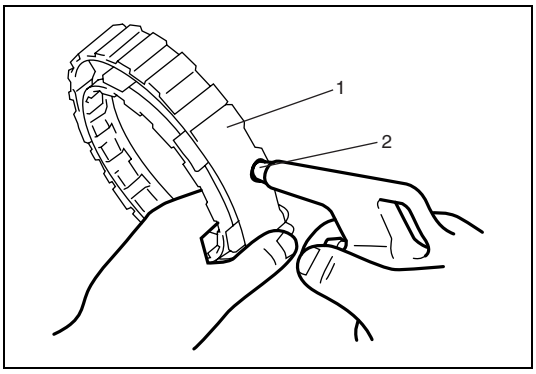

49) Remove 2nd (No.3) brake piston from 2nd (No.3) brake cylinder (1) by applying compressed air (392 kPa, 4.0 kg/cm^2, 57 psi) into oil hole (2) of 2nd (No.3) brake cylinder (1) as shown in figure.

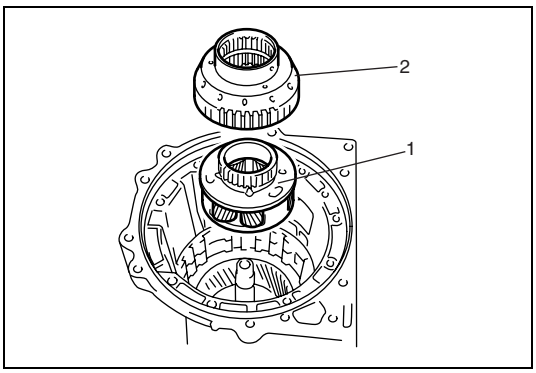

50) Remove front planetary gear assembly (1) and one-way No.1 clutch inner race (2) from transmission case.

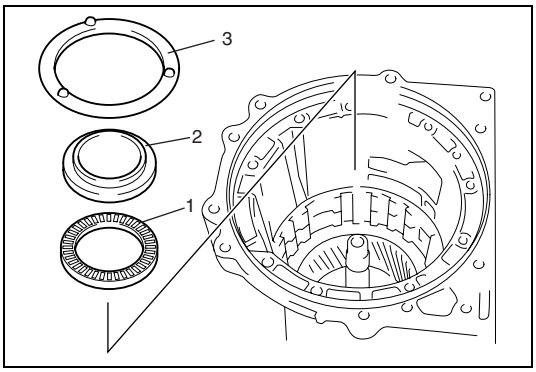

51) Remove thrust needle roller bearing (1), thrust bearing race No.3 (2) and planetary carrier thrust washer No.2 (3) from transmission case.

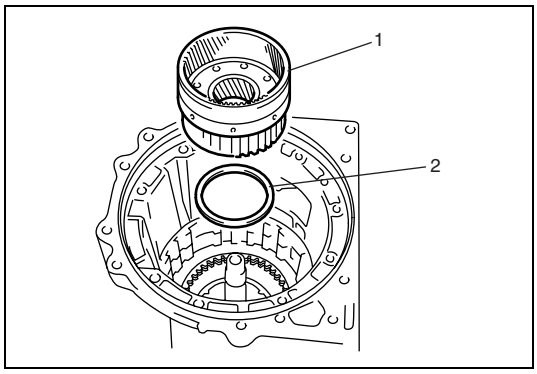

52) Remove front planetary ring gear assembly (1) and thrust needle roller bearing (2) from transmission case.

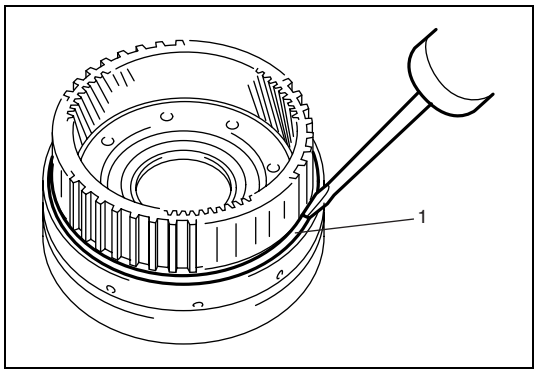

53) Remove snap ring (1) by using flat end rod or the like.

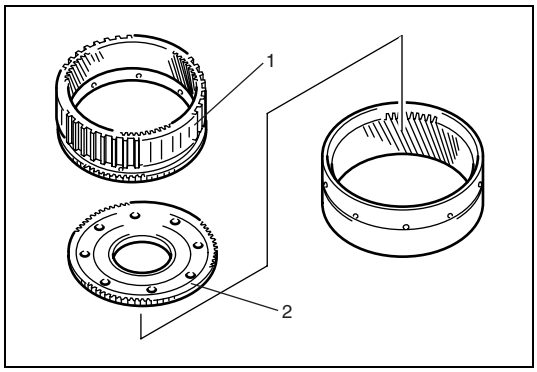

54) Remove middle planetary ring gear (1) and front planetary ring gear flange (2) from front planetary ring gear.

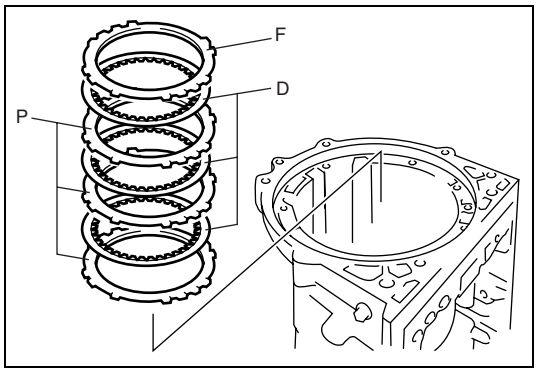

55) Remove No.1 brake flange “F”, No.1 brake discs “D” and No.1 brake plates “P” from transmission case.

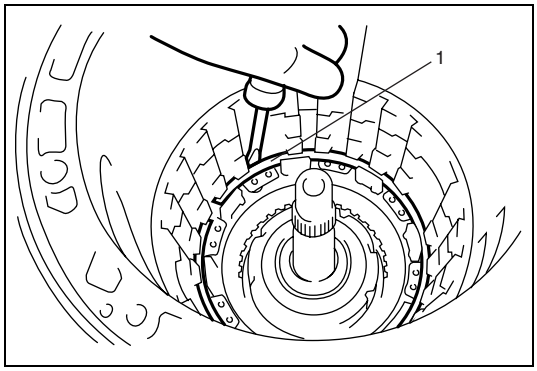

56) Remove snap ring (1) by using flat end rod or the like.

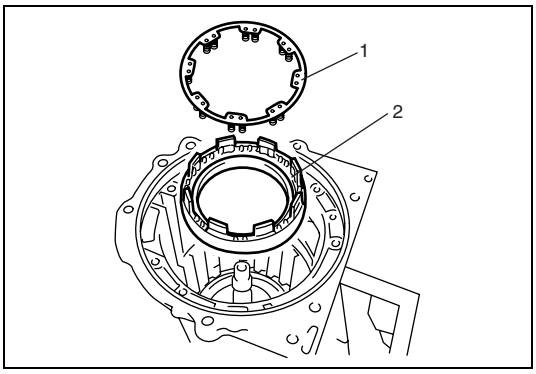

57) Remove No.1 brake piston return spring (1) and No.1 brake piston (2) from transmission case.

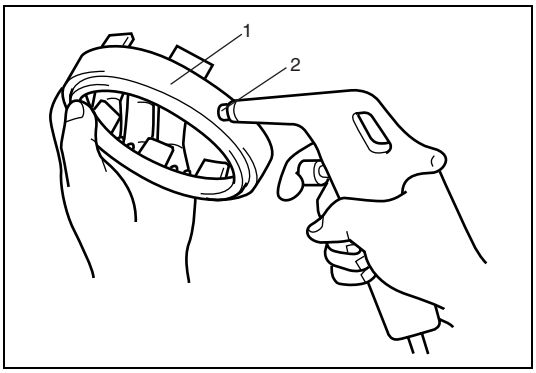

58) Remove No.1 brake piston from No.1 brake piston cylinder (1) by applying compressed air (392 kPa, 4.0 kg/cm^2, 57 psi) into oil hole (2) of No.1 brake piston cylinder (1) as shown in figure.
59) Remove O-ring from No.1 brake piston.

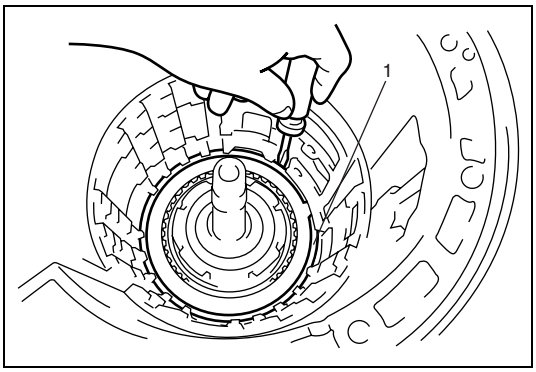

60) Remove snap ring (1) by using flat end rod or the like.

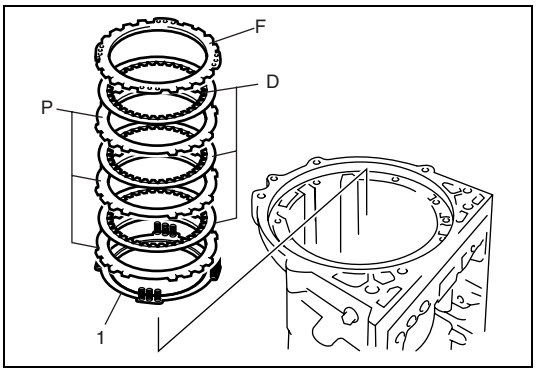

61) Remove No.2 brake flange “F”, No.2 brake piston return spring (1), No.2 brake discs “D” and No.2 brake plates “P” from transmission case.

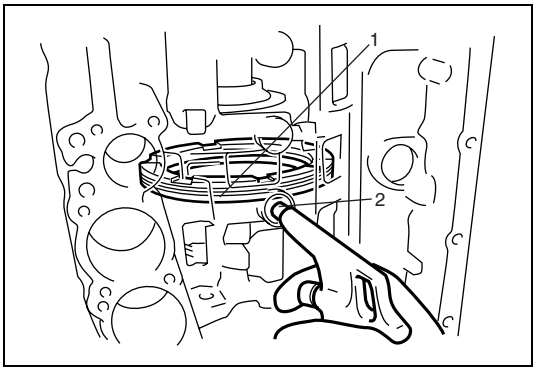

62) Remove No.2 brake cylinder including No.2 brake piston (1) by applying compressed air (392 kPa, 4.0 kg/cm^2, 57 psi) into oil hole (2) of transmission case.

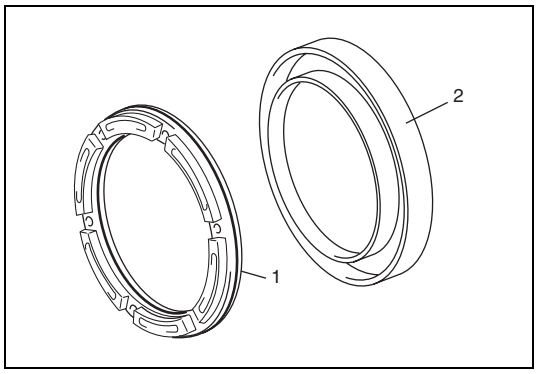

63) Remove No.2 brake piston (1) from No.2 brake cylinder (2).

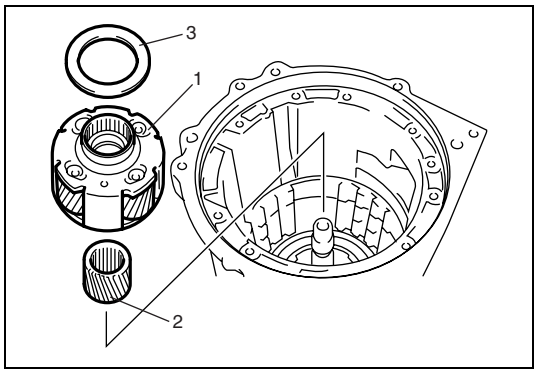

64) Remove middle planetary gear assembly (1), planetary sun gear (2) and thrust bearing race No.4 (3) from transmission case.

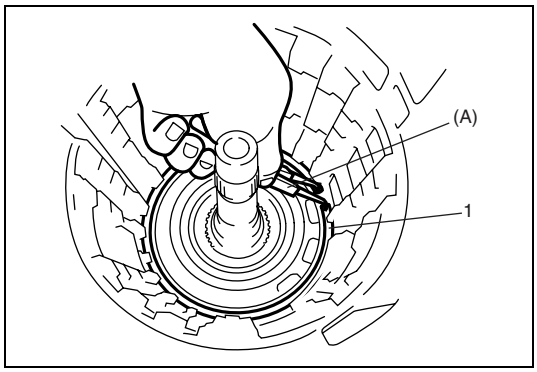

65) Remove snap ring (1) by using special tool.

Special tool
(A) : 09900-06108

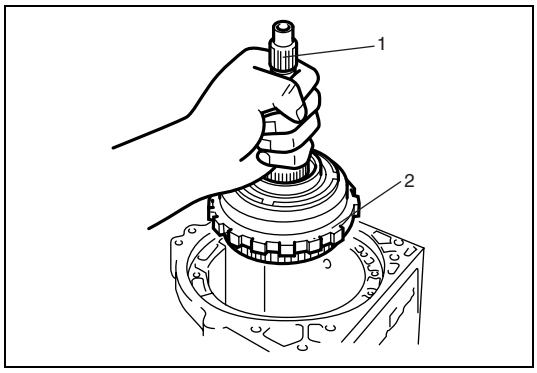

66) Remove intermediate shaft (1) and one-way No.3 clutch assembly (2) from transmission case.

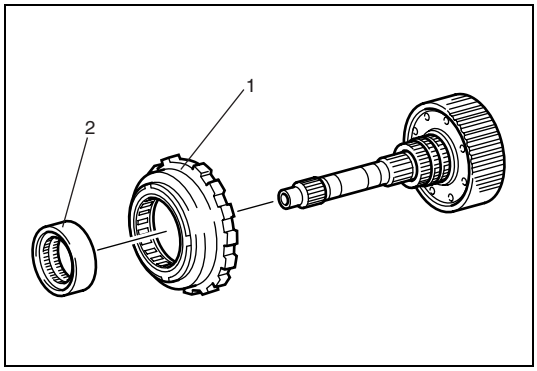

67) Remove one-way No.3 clutch assembly (1) and one-way No.3 clutch inner race (2) from intermediate shaft.

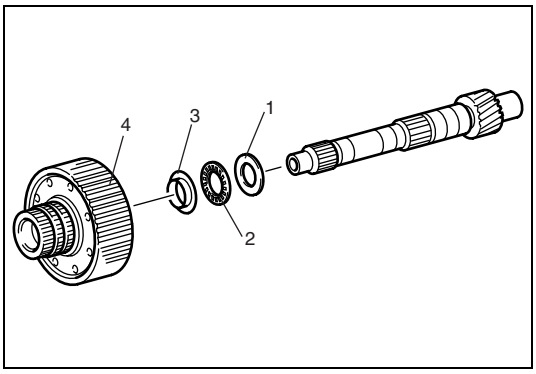

68) Remove thrust bearing race No.8 (1), thrust needle roller bearing (2), thrust bearing race No.7 (3) and planetary ring gear flange assembly (4) from intermediate shaft.

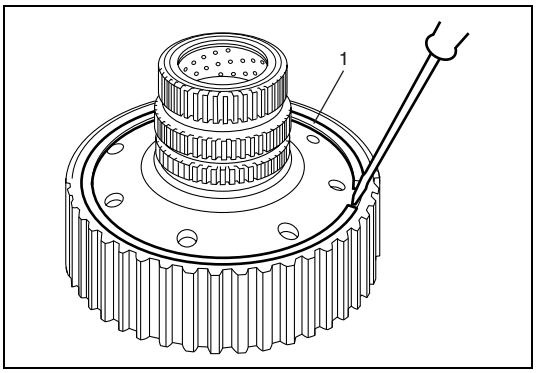

69) Remove snap ring (1) by using flat end rod or the like.

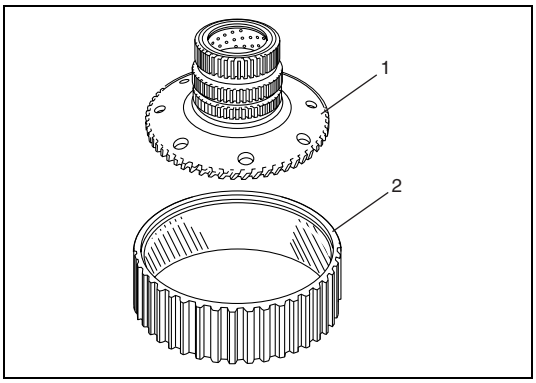

70) Remove rear planetary ring gear flange (1) from rear planetary ring gear (2).

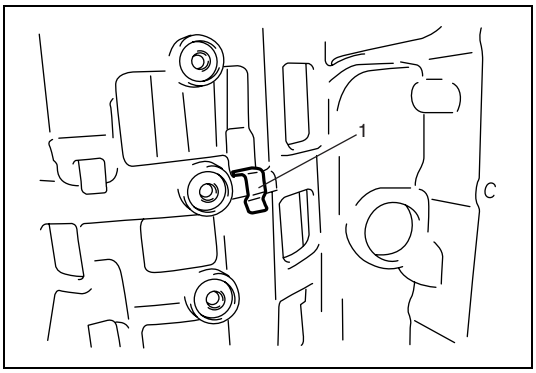

71) Remove brake plate stopper spring (1) from transmission case.

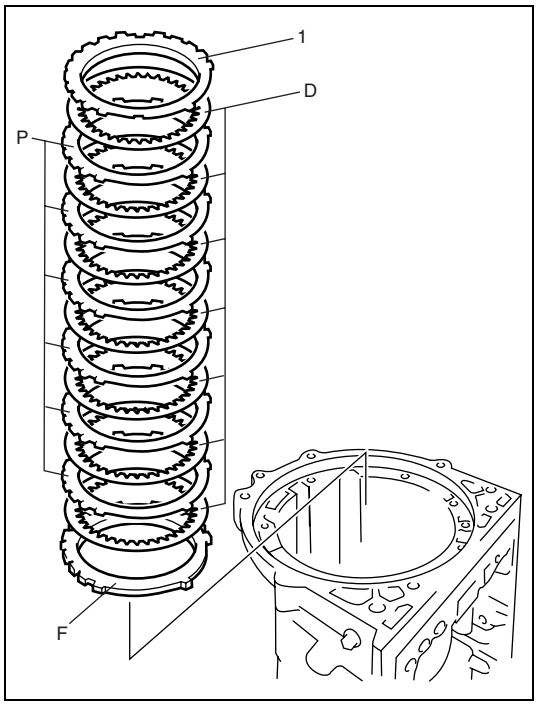

72) Remove 1st & reverse (No.4) brake flange (1) from transmission case.
73) Remove 1st & reverse (No.4) brake plates “P” and 1st & reverse (No.4) brake discs “D” from transmission case.
74) Remove 1st & reverse (No.4) brake flange “F” from transmission case.

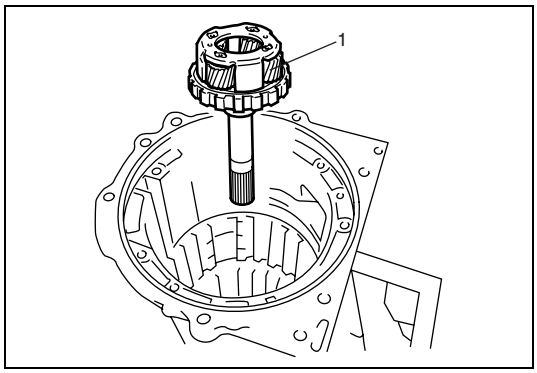

75) Remove rear planetary gear assembly (1) from transmission case.

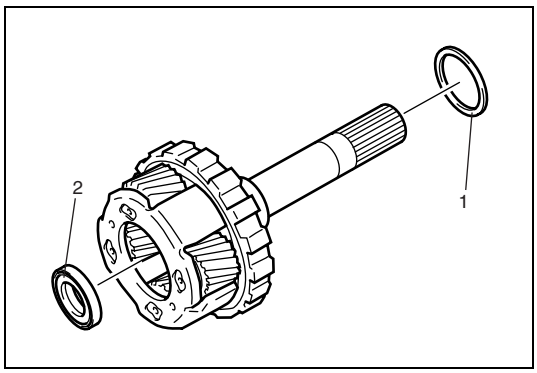

76) Remove thrust bearing race No.9 (1) and thrust needle roller bearing (2) from rear planetary gear assembly.

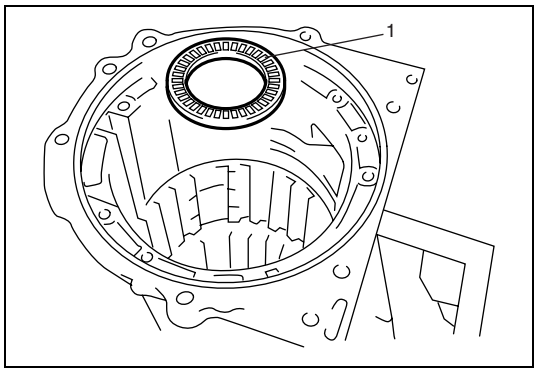

77) Remove thrust needle roller bearing (1) from transmission case.

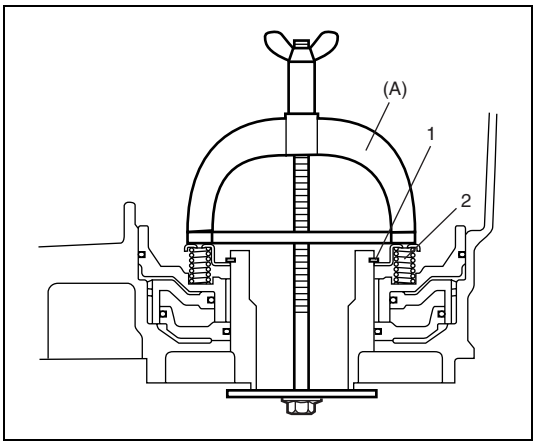

78) Compress 1st & reverse (No.4) brake return spring (2) until the 1st & reverse (No.4) return spring is lowered to the place 1 – 2 mm (0.039 – 0.078 in.) from the snap ring groove by using special tool and then remove snap ring (1).

CAUTION:
Be careful when applying pressure, for overpressure will cause plate section of 1st & reverse (No.4) return spring to deform.

Special tool
(A) : 09922-86010

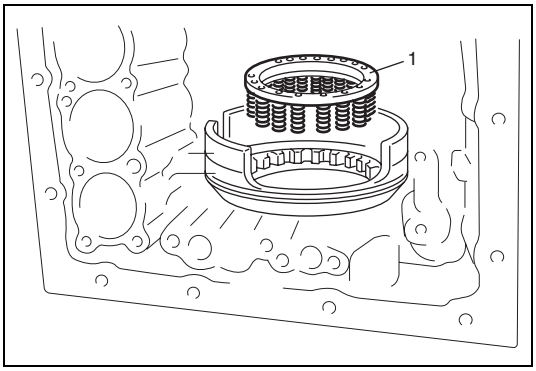

79) Remove 1st & reverse (No.4) brake return spring (1).

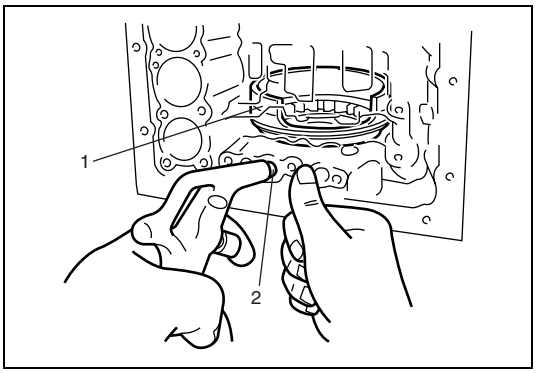

80) Remove 1st & reverse (No.4) brake piston (1) by applying compressed air (392 kPa, 4.0 kg/cm^2, 57 psi) into oil hole (2) of transmission case.
81) Remove O-ring from 1st & reverse (No.4) brake piston (1).

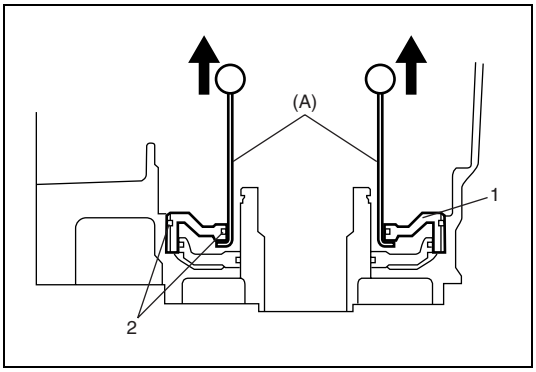

82) Remove brake reaction sleeve (1) by using special tools.

Special tool
(A) : 09920-20310

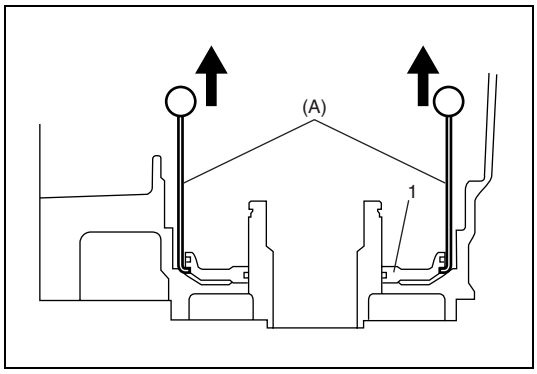

83) Remove 1st & reverse brake inner piston (1) by using special tools.

Special tool
(A) : 09920-20310

Subassembly

Oil Pump Assembly

Components

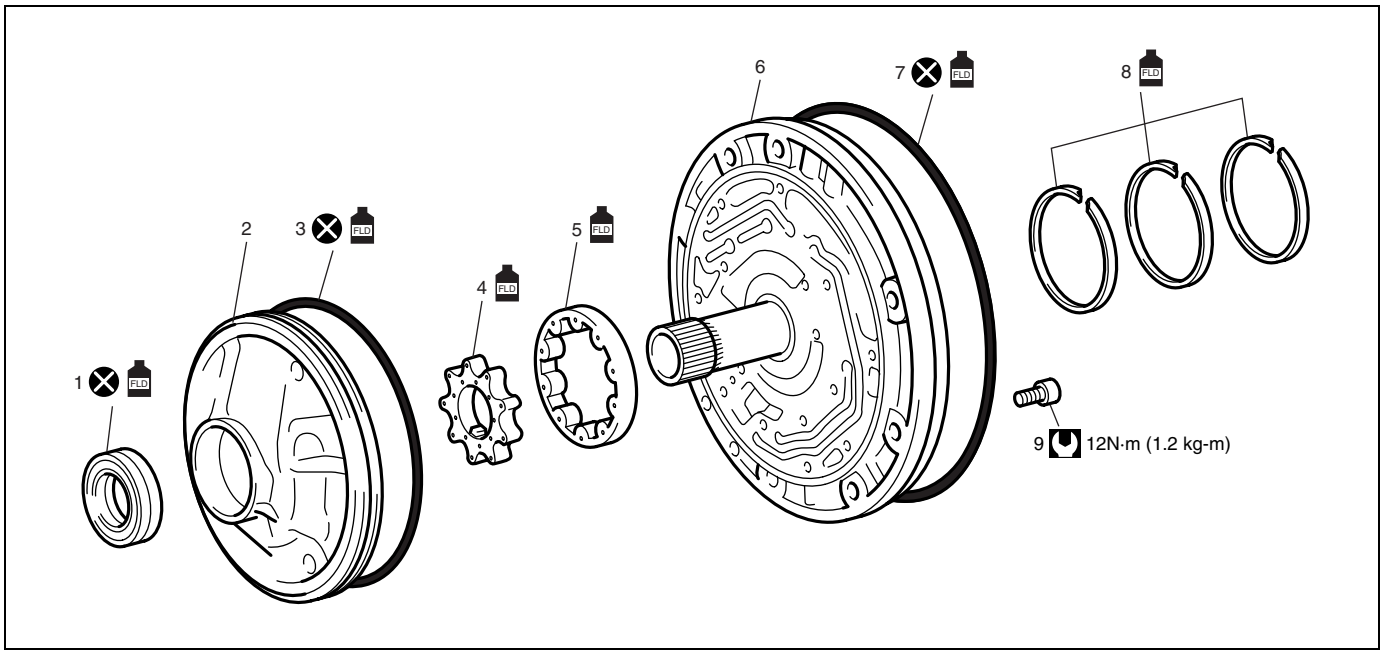

1. Oil pump oil seal	5. Oil pump driven gear	9. Oil pump body bolt
2. Oil pump body	6. Stator shaft assembly	Tightening torque
3. O-ring	7. O-ring	Do not reuse.
4. Oil pump drive gear	8. Clutch drum oil seal ring	Apply A/T fluid

Disassembly

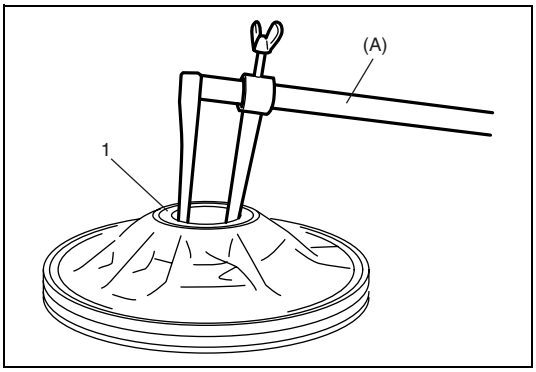

1) Remove oil pump oil seal (1) by using special tool.

CAUTION:
Be careful not to damage bushing and oil pump body.

Special tool
(A) : 09913-50121

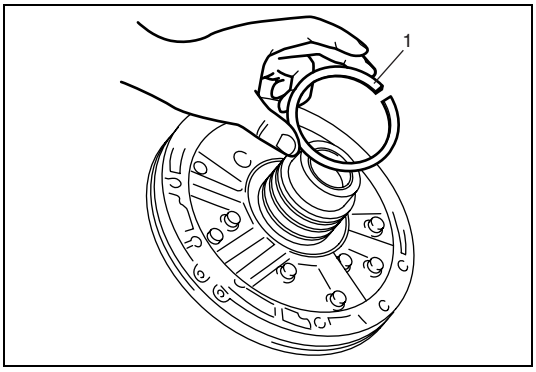

2) Remove 3 clutch drum oil seal rings (1).

NOTE:
Be careful not to open seal ring more than necessary.

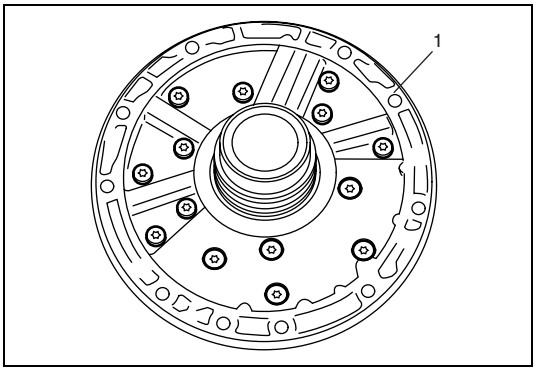

3) Remove stator shaft assembly (1) from oil pump body by removing 14 bolts.

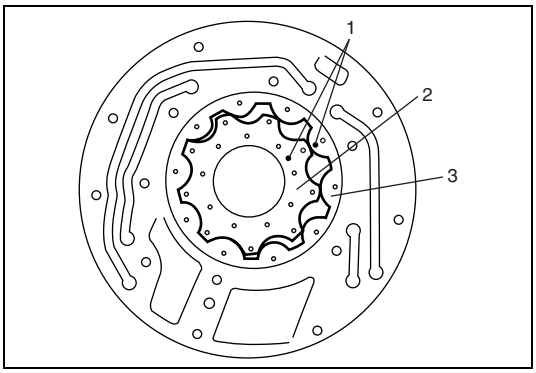

4) Give marks (1) on drive gear (2) and driven gear (3) by using water-proof paint.
5) Remove drive gear (2) and driven gear (3) from oil pump body.

Inspection

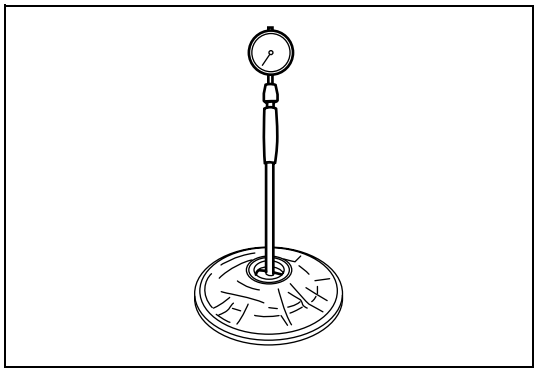

- Measure inside diameter of oil pump body bushing.
  If inside diameter exceeds limit, replace oil pump body.

Oil pump body bushing inside diameter limit :
38.188 mm (1.504 in.)

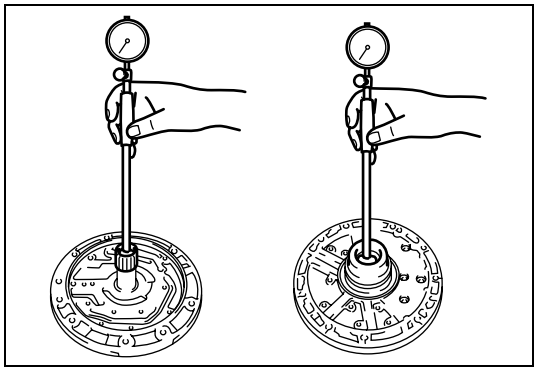

- Measure inside diameter of stator shaft assembly bushing.
  If inside diameter exceeds limit, replace stator shaft assembly.

Stator shaft assembly bushing inside diameter limit
Torque converter side : 21.577 mm (0.850 in.)
Output shaft side : 32.08 mm (1.263 in.)

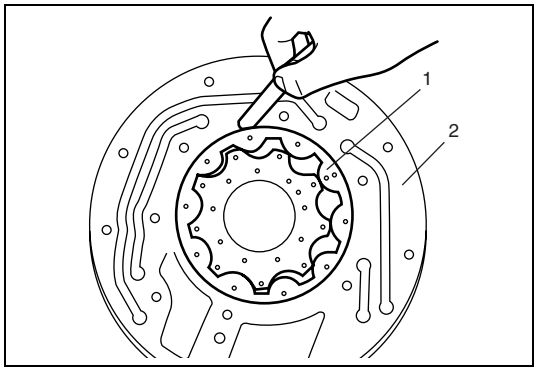

- Check oil pump body clearance of driven gear.
  Push driven gear (1) to one side of oil pump body (2).
  Using a feeler gauge, measure clearance between driven gear (1) and oil pump body (2).
  If clearance exceeds standard value, replace oil pump assembly.

Clearance between driven gear and oil pump body
Standard : 0.10 – 0.17 mm (0.004 – 0.007 in.)

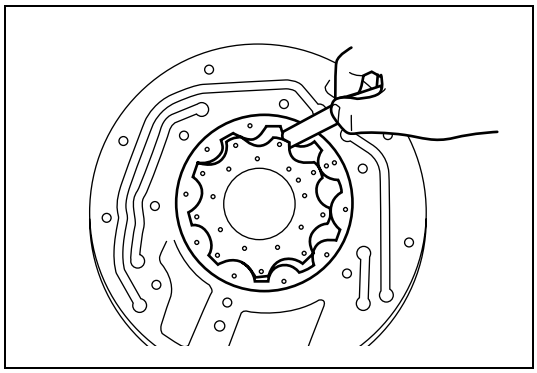

- Check tip clearance of driven gear.
  Measure radial clearance between driven and drive gears tooth tip.
  If clearance exceeds standard value, replace oil pump assembly.

Tip clearance between driven gear and drive gear
Standard : 0.07 – 0.15 mm (0.003 – 0.006 in.)

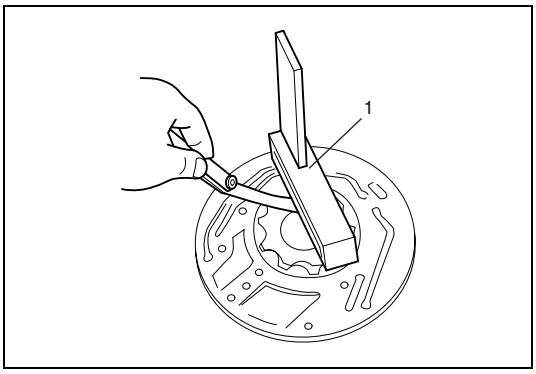

- Check side clearance of both gears.
  Using a straightedge (1) and a feeler gauge, measure side clearance between gears and oil pump body.
  If clearance exceeds standard value, replace oil pump assembly.

Side clearance between gears and oil pump body
Standard : 0.02 – 0.05 mm (0.0008 – 0.002 in.)

Assembly

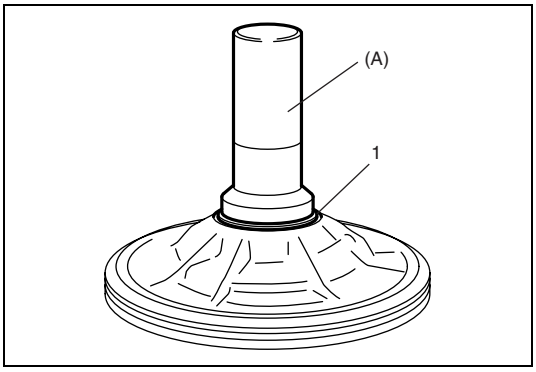

1) Press-fit new oil pump oil seal (1) to oil pump body till its end face is flush with oil pump body end face, using special tool.

Special tool
(A) : 09913-75810

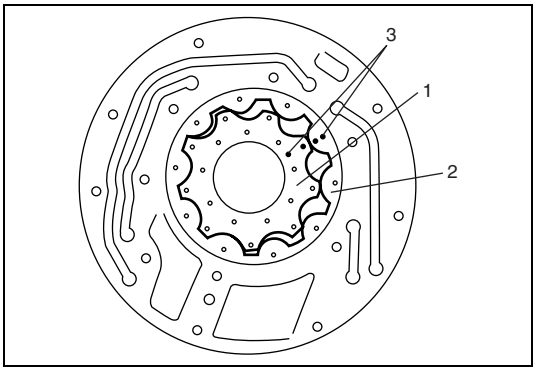

2) Install drive gear (1) and driven gear (2) to oil pump body aligning marks and facing marked surface (3) with the direction of stator shaft assembly side. Apply A/T fluid to gears and oil pump body.

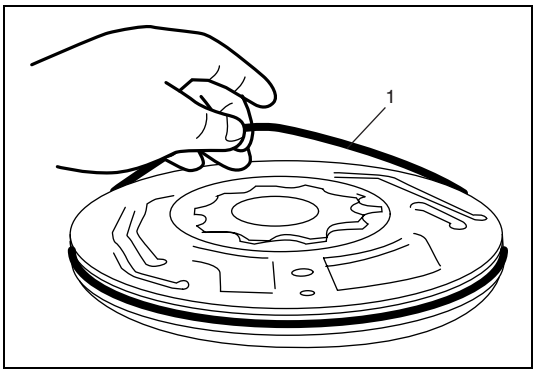

3) Apply A/T fluid to new O-ring (1) and then install O-ring to oil pump body.

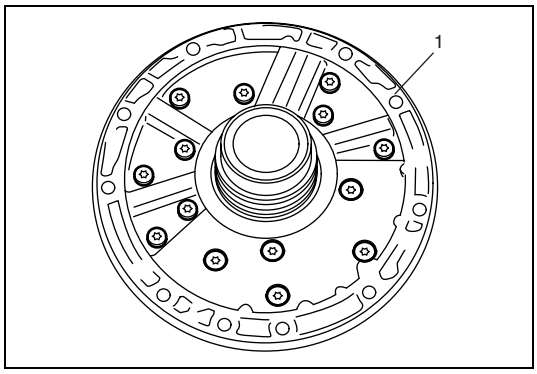

4) Install stator shaft assembly (1) to oil pump.
   Tighten 14 bolts to specified torque.

Tightening torque
Oil pump body bolt
(a) : 11 N·m (1.1 kg-m, 8.0 lb-ft)

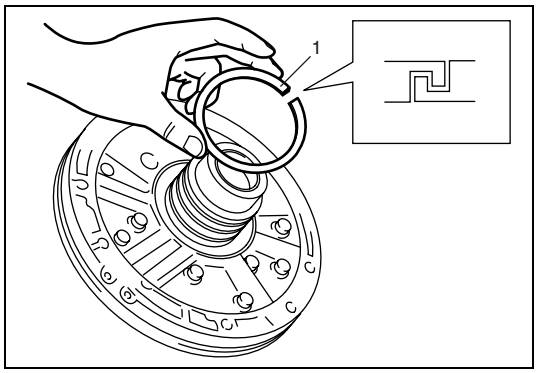

5) Apply A/T fluid to 3 clutch drum oil seal rings (1).
6) Squeeze ends of oil seal rings together with wrap distance 8 mm (0.314 in.) or less and then install them to stator shaft groove.

CAUTION:
Do not spread seal ends excessively.

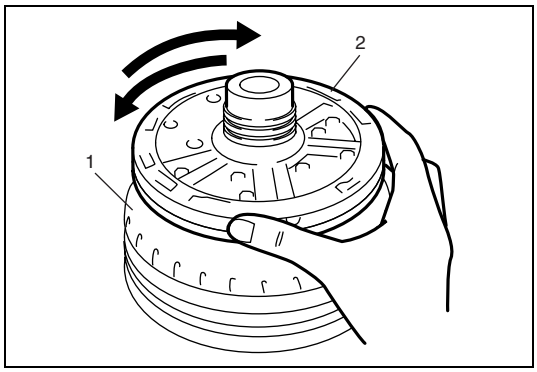

7) Check oil pump drive gear rotation as the following procedure.
   a) Place oil pump body (2) on torque converter (1).
   b) Make sure drive gear rotates smoothly.
   c) Remove oil pomp body (2) from torque converter (1).

CAUTION:
Be careful not to damage oil pump body oil seal.

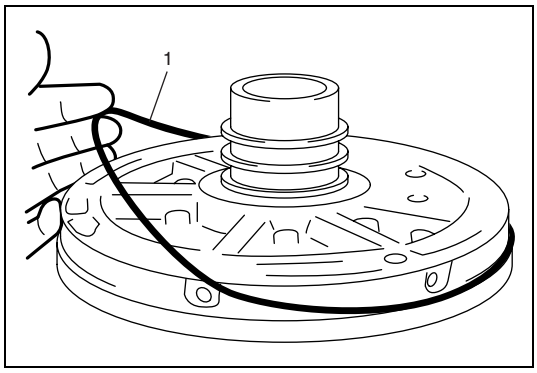

8) Apply A/T fluid to new O-ring (1) and then install O-ring to oil pump body.

Clutch Drum & Input Shaft Assembly

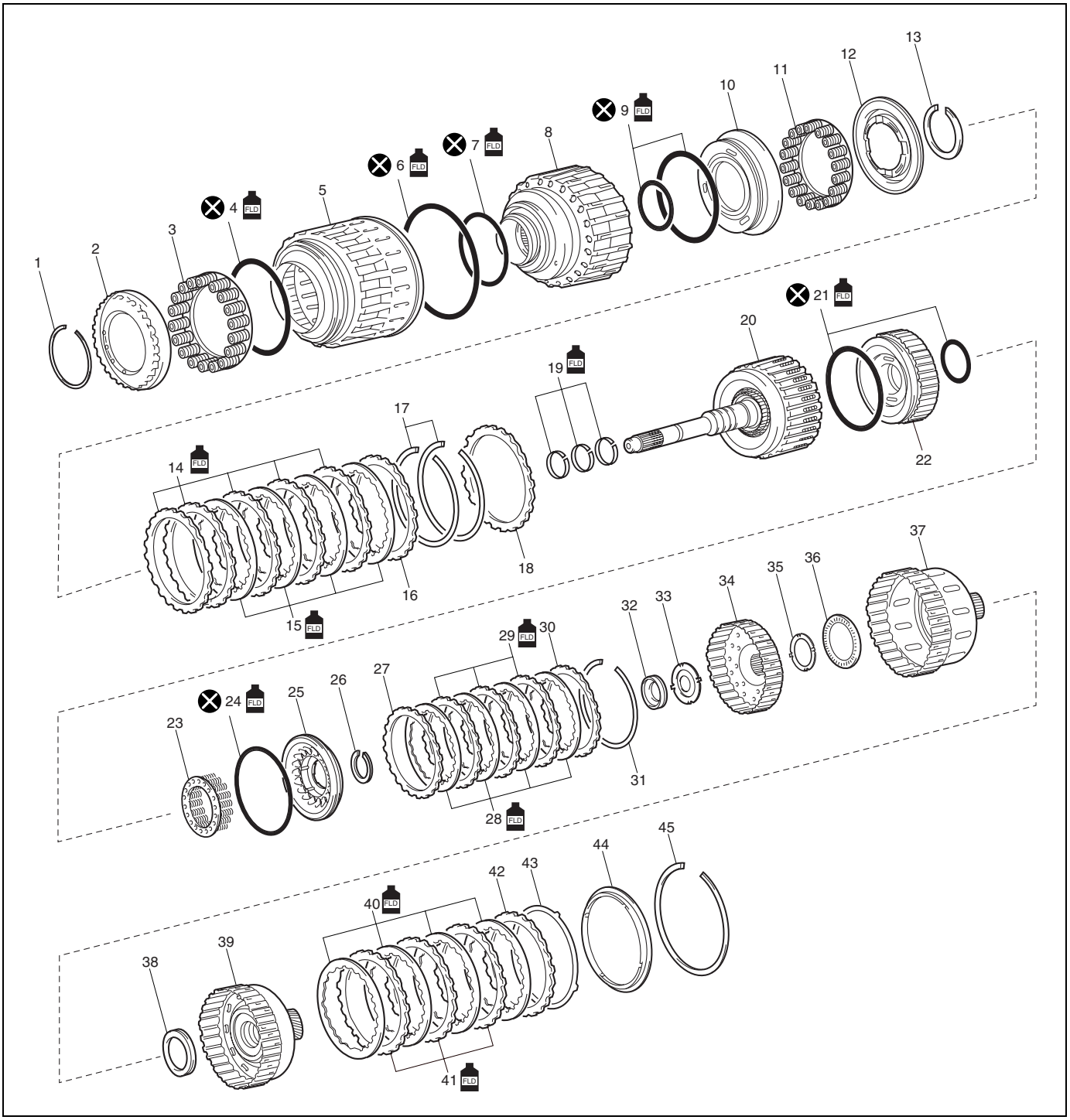

1. Snap ring	13. Snap ring	25. Clutch balancer No.1	37. Direct clutch hub
2. Clutch balancer No.3	14. Direct clutch plate	26. Snap ring	38. Thrust needle roller bearing
3. Reverse clutch return spring	15. Direct clutch disc	27. Forward clutch flange	39. Reverse clutch hub
4. O-ring	16. Direct clutch flange	28. Forward clutch disc	40. Reverse clutch disc
5. Reverse clutch piston	17. Snap ring	29. Forward clutch plate	41. Reverse clutch plate
6. O-ring	18. Reverse clutch flange	30. Forward clutch flange	42. Reverse clutch flange
7. O-ring	19. Input shaft oil seal ring	31. Snap ring	43. Clutch cushion plate
8. Clutch drum	20. Input shaft	32. Thrust needle roller bearing	44. Reverse clutch reaction sleeve
9. O-ring	21. O-ring	33. Thrust bearing race	45. Snap ring
10. Direct clutch piston	22. Forward clutch piston	34. Forward clutch hub	⊗ Do not reuse.
11. Direct clutch return spring	23. Forward clutch return spring	35. Thrust bearing race No.2	FLD Apply A/T fluid
12. Clutch balancer No.2	24. O-ring	36. Thrust needle roller bearing	

Disassembly

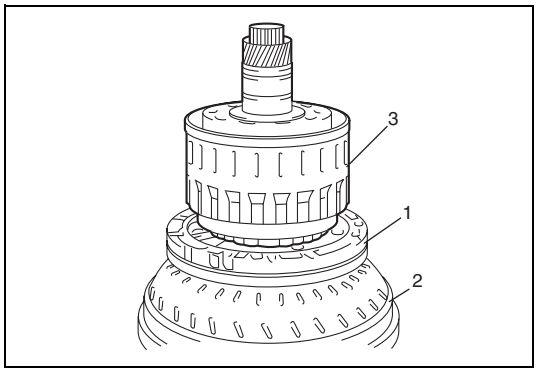

1) Place oil pump (1) onto torque converter (2), and then place clutch drum and input shaft assembly (3) onto oil pump (1).

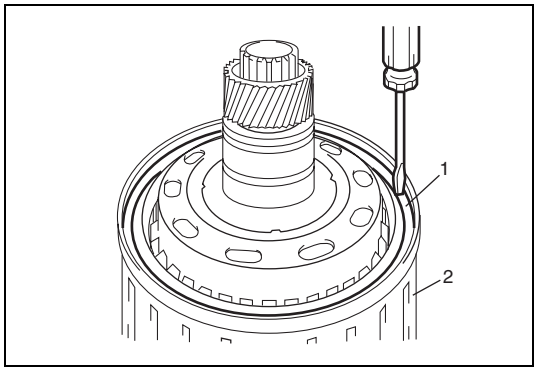

2) Remove snap ring (1) from clutch drum and input shaft assembly (2) by using flat end rod or the like.

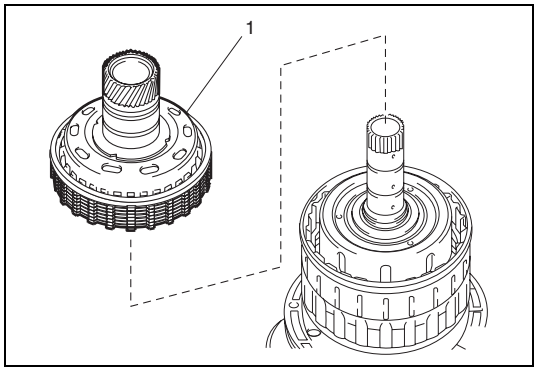

3) Remove reverse clutch hub (1) with reverse clutch reaction sleeve, clutch cushion plate, reverse clutch flange, 4 reverse clutch discs and 3 reverse clutch plates from clutch drum assembly.

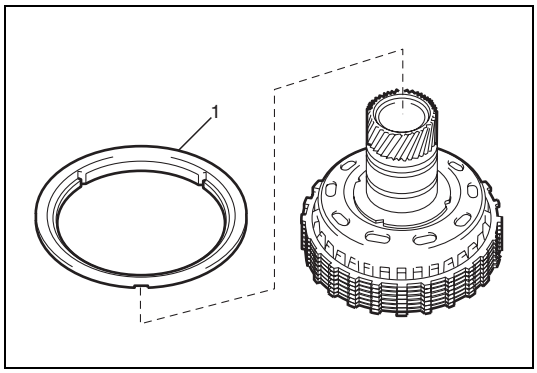

4) Remove reverse clutch reaction sleeve (1) from reverse clutch hub.

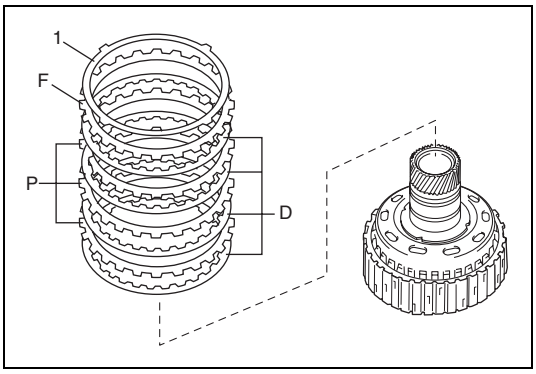

5) Remove clutch cushion plate (1), reverse clutch flange “F”, reverse clutch plates “P” and reverse clutch discs “D” from reverse clutch hub.

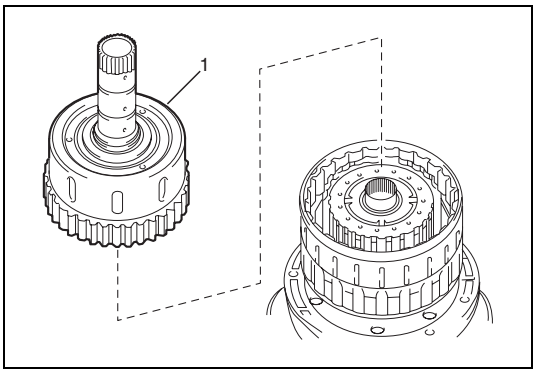

6) Remove direct clutch hub (1) from clutch drum assembly.

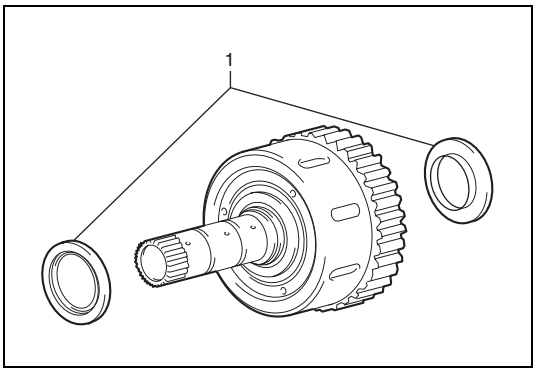

7) Remove 2 thrust needle roller bearings (1) from direct clutch hub.

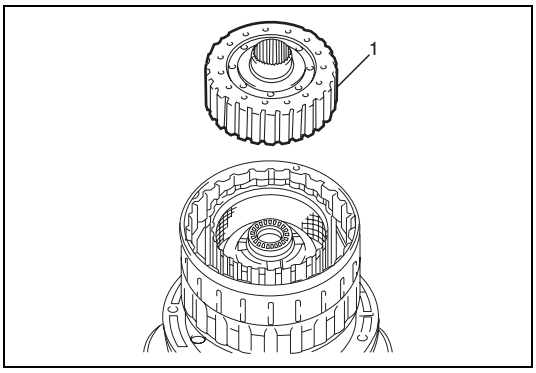

8) Remove forward clutch hub (1) from clutch drum assembly.

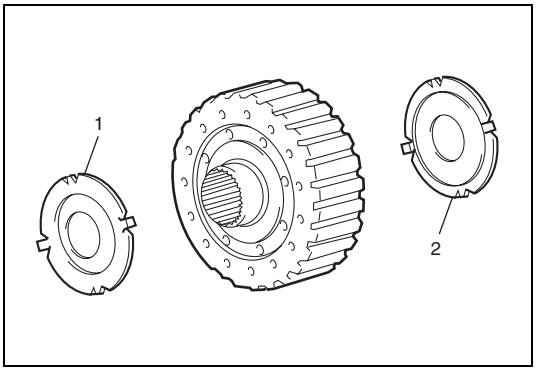

9) Remove thrust bearing race No.2 (1) and thrust bearing race (2) from forward clutch hub.

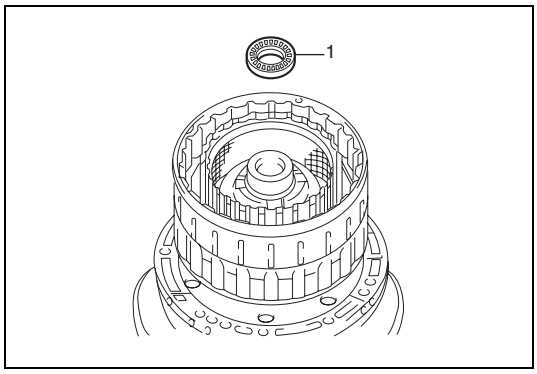

10) Remove thrust needle roller bearing (1) from clutch drum assembly.

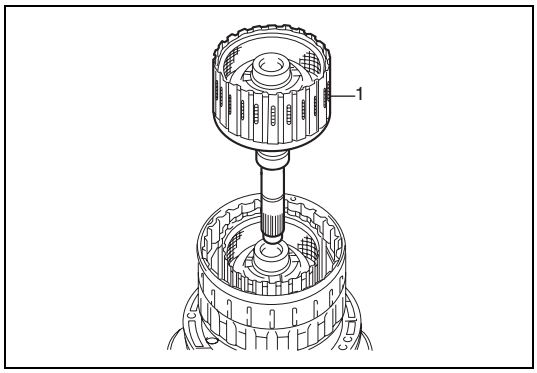

11) Remove input shaft assembly (1) from clutch drum assembly.

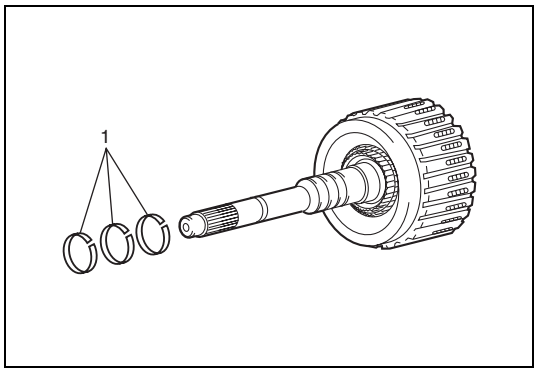

12) Remove 3 oil seal rings (1) from input shaft assembly.

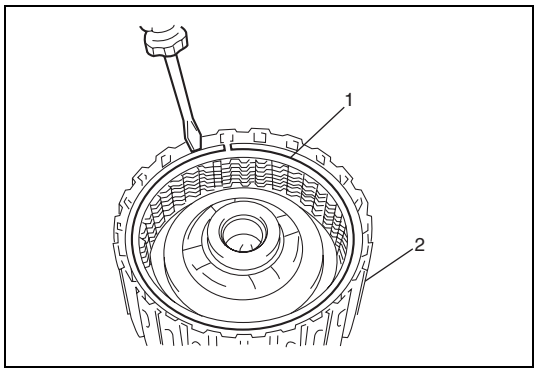

13) Remove snap ring (1) from input shaft assembly (2) by using flat end rod or the like.

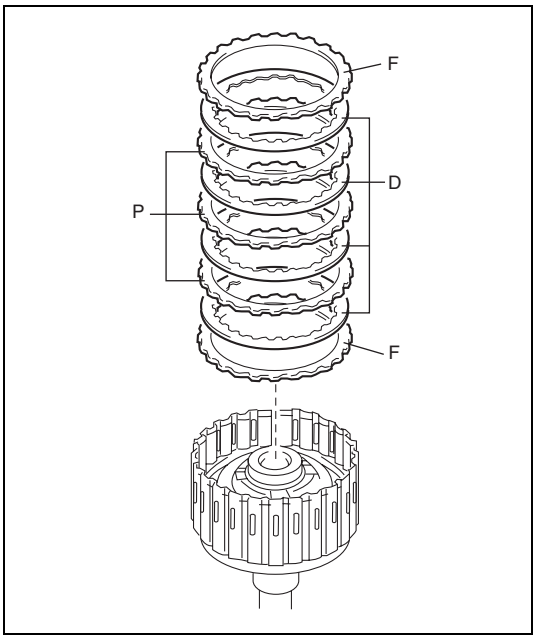

14) Remove forward clutch flanges “F”, forward clutch discs “D” and forward clutch plates “P” from input shaft assembly.

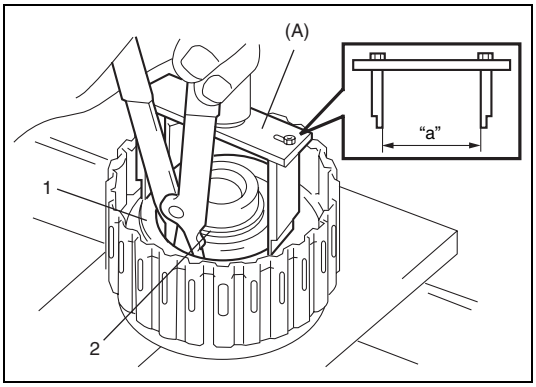

15) Compress clutch balancer No.1 and forward clutch return spring (1) until the clutch balancer No.1 is lowered to the place 1 – 2 mm (0.039 – 0.078 in.) from the snap ring groove by using special tool and hydraulic press, and then remove snap ring (2).

CAUTION:

Be careful when applying pressure, for overpressure will cause forward clutch return spring to deform.

NOTE:

Set special tool to the width of “a” 68 mm (2.652 in.) as shown in figure.

Special tool
(A) : 09926-96520

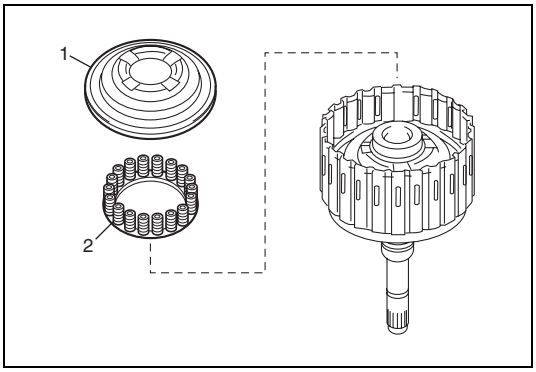

16) Remove clutch balancer No.1 (1) and forward clutch return spring (2) from input shaft assembly.

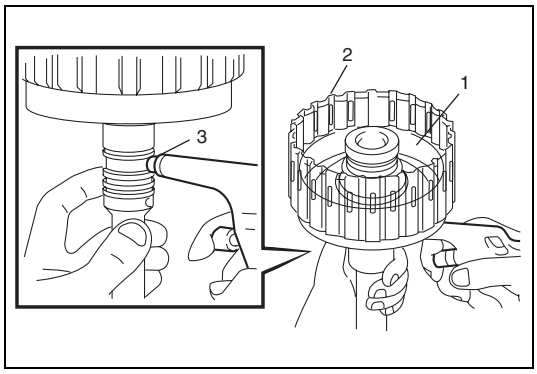

17) Remove forward clutch piston (1) from input shaft assembly (2) by applying compressed air (392 kPa, 4.0 kg/cm^2, 57psi) into oil hole (3) of input shaft assembly as shown in figure.

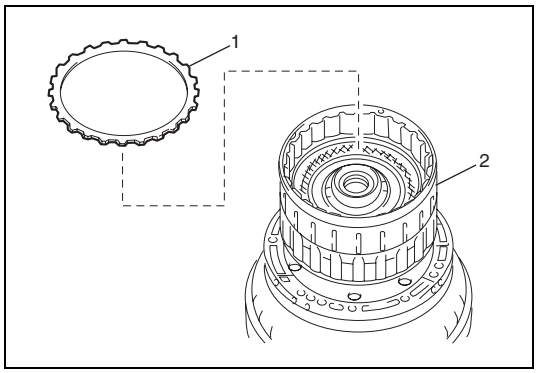

18) Remove reverse clutch flange (1) from clutch drum assembly (2).

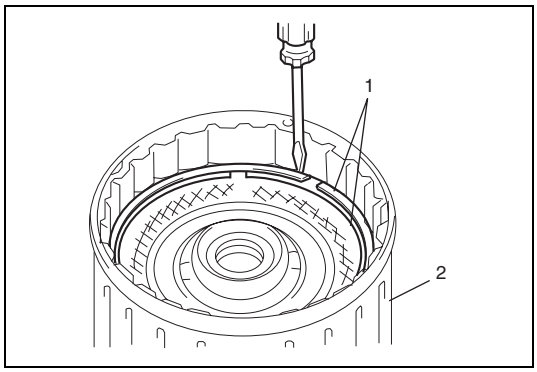

19) Remove 2 snap rings (1) from clutch drum assembly (2) by using flat end rod or the like.

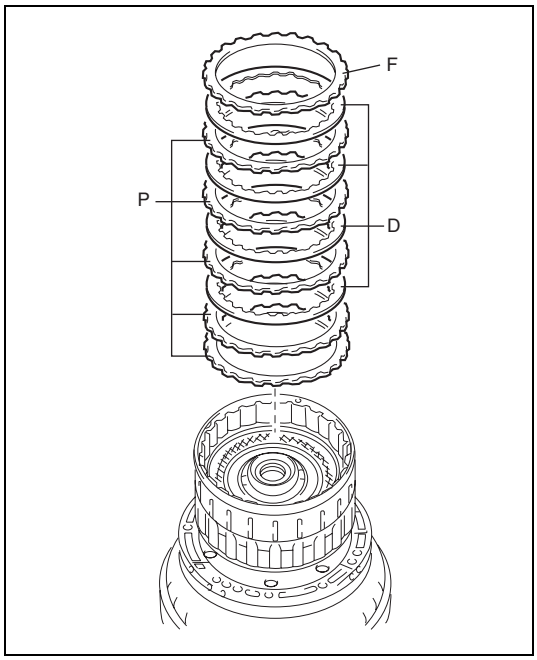

20) Remove direct clutch flange “F”, direct clutch plates “P” and direct clutch discs “D” from clutch drum assembly.

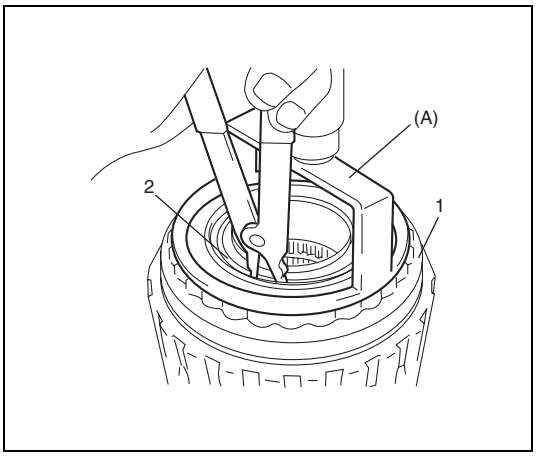

21) Compress clutch balancer No.3 and reverse clutch return spring (1) until the clutch balancer No.3 is lowered to the place 1 – 2 mm (0.039 – 0.078 in.) from the snap ring groove by using special tool and hydraulic press, and then remove snap ring (2).

CAUTION:
Be careful when applying pressure, for overpressure will cause reverse clutch return spring to deform.

Special tool
(A) : 09926-96040

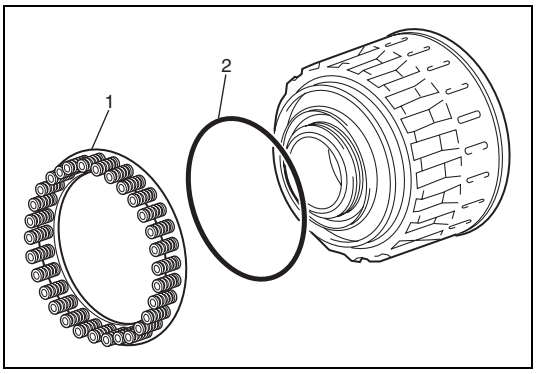

22) Remove reverse clutch return spring (1) and O-ring (2) from reverse clutch piston.

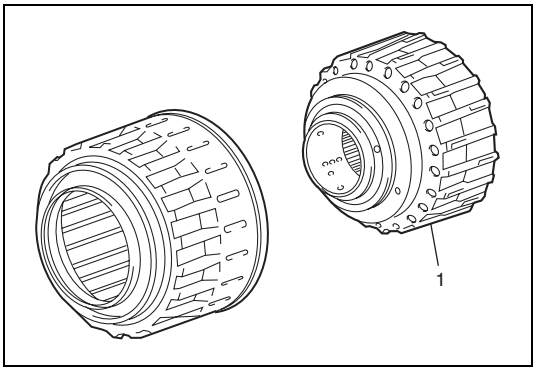

23) Remove reverse clutch piston sub assembly from clutch drum sub assembly (1).

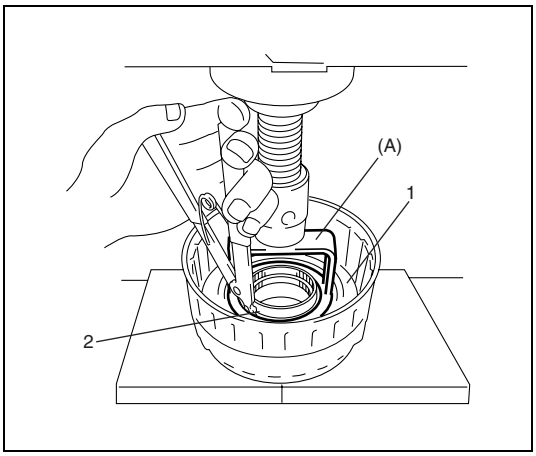

24) Compress clutch balancer No.2 and direct clutch return spring (1) until the clutch balancer No.2 is lowered to the place 1 – 2 mm (0.039 – 0.078 in.) from the snap ring groove by using special tool and hydraulic press, and then remove snap ring (2).

CAUTION:
Be careful when applying pressure, for overpressure will cause direct clutch return spring to deform.

Special tool
(A) : 09925-96040

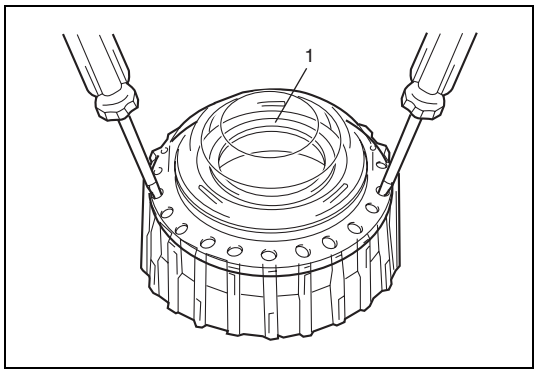

25) Using 2 screw drivers, remove direct clutch piston sub assembly (1) from clutch drum.

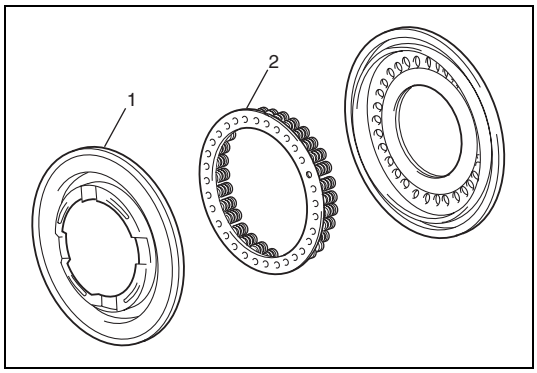

26) Remove clutch balancer No.2 (1) and direct clutch return spring (2) from direct clutch piston sub assembly.

Inspection

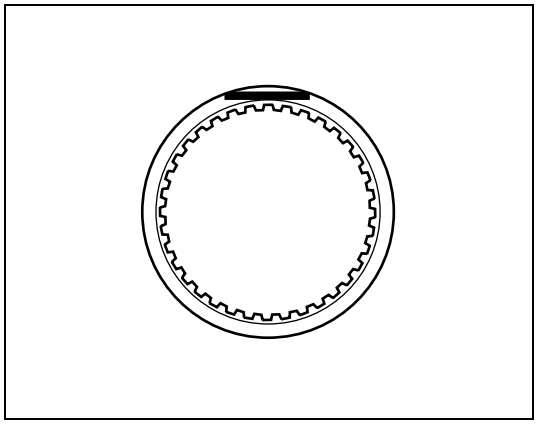

- Check that sliding surface of discs, plate and flange are not worn or burnt. if necessary, replace them.

NOTE:

- **If disc lining is exfoliated, discolored or worn hardly, replace all discs.**
- **If only a part of printed numbers is corroded, replace all discs.**
- **Before assembling new discs, soak them in A/T fluid for at least 15 minutes.**

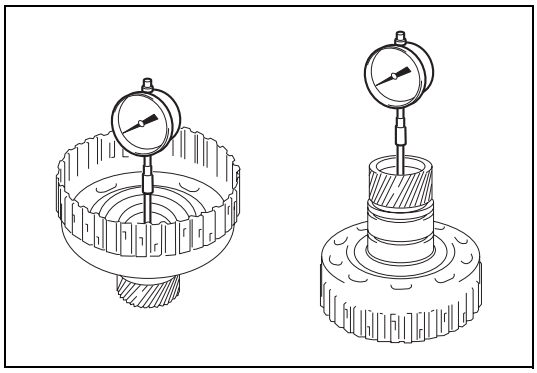

- Measure inside diameter of reverse clutch hub bushing. If inside diameter exceeds limit, replace reverse clutch hub.

Reveres clutch hub bushing inside diameter
Standard : 35.812 – 35.837 mm (1.4099 – 1.4109 in.)
Limit : 35.887 mm (1.4129 in.)

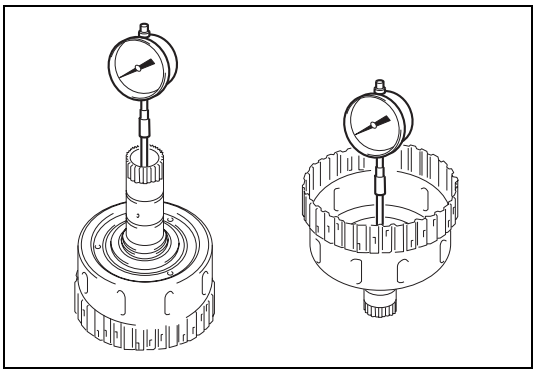

- Measure inside diameter of direct clutch hub bushing. If inside diameter exceeds limit, replace direct clutch hub.

Direct clutch hub bushing inside diameter
Standard : 26.037 – 26.062 mm (1.0251 – 1.0261 in.)
Limit : 26.112 mm (1.028 in.)

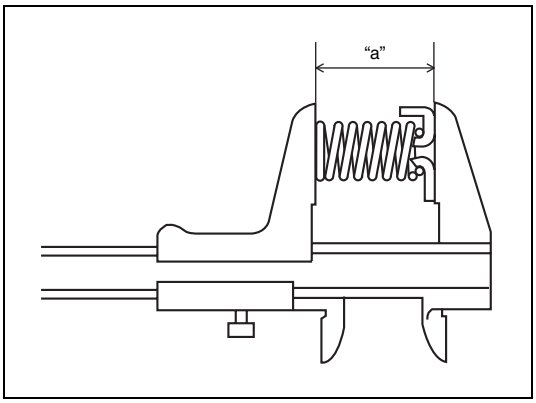

- Measure free length of forward clutch return spring including spring seat.

Forward clutch return spring free length
"a" : 26.74 mm (1.053 in.)

NOTE:

- **Do not apply excessive force when measuring spring free length.**
- **Perform measurement at several points.**

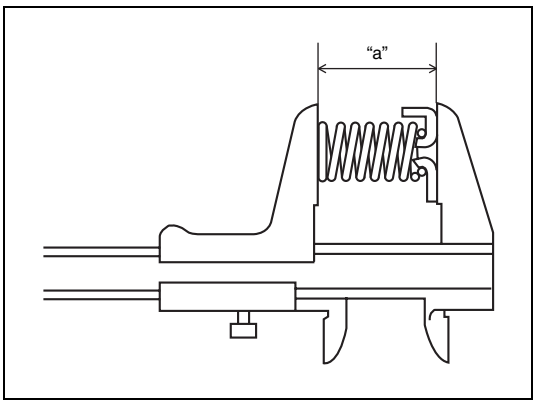

- Measure free length reverse clutch return spring including spring seat.

Reverse clutch return spring free length
"a" : 21.04 mm (0.828 in.)

NOTE:

- **Do not apply excessive force when measuring spring free length.**
- **Perform measurement at several points.**

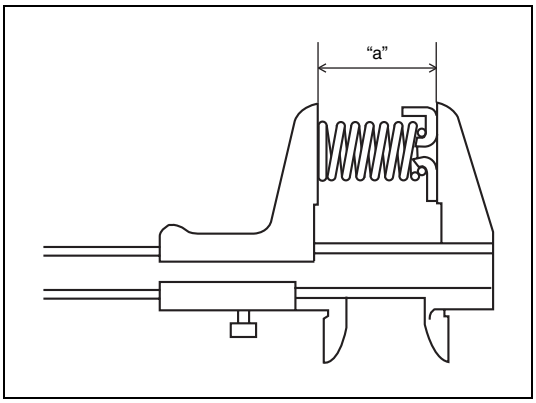

- Measure free length direct clutch return spring including spring seat.

Direct clutch return spring free length
"a" : 19.51 mm (0.768 in.)

NOTE:

- **Do not apply excessive force when measuring spring free length.**
- **Perform measurement at several points.**

Assembly

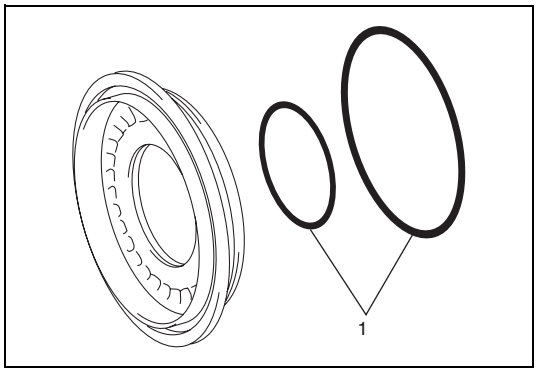

1) Apply A/T fluid to new 2 O-rings (1) and then install O-rings to direct clutch piston.

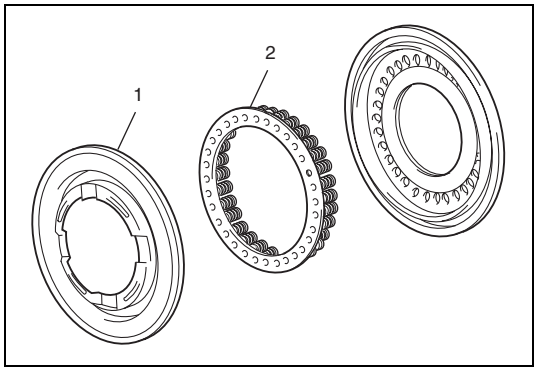

2) Install clutch balancer No.2 (1) and direct clutch return spring (2) to direct clutch piston sub assembly.

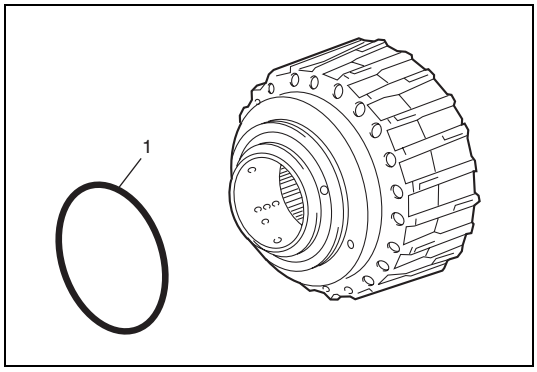

3) Apply A/T fluid to new O-ring (1), and then install O-ring to clutch drum sub assembly.
4) Press-fit direct clutch piston into clutch drum by hands.

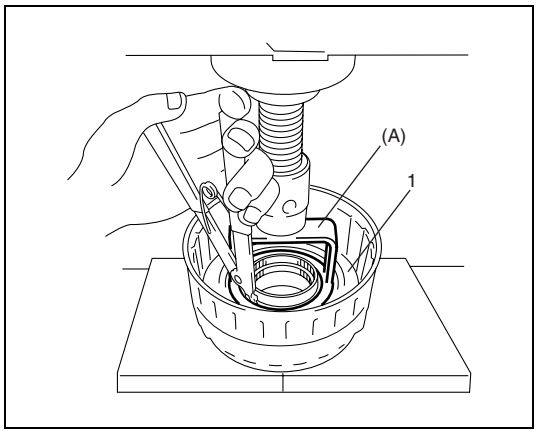

5) Compress clutch balancer No.2 (1) until the clutch balancer No.2 is lowered to the place 1 – 2 mm (0.039 – 0.078 in.) from the snap ring groove by using special tool and hydraulic press.

Special tool
(A) : 09925-96040

CAUTION:
Be careful when applying pressure, for overpressure will cause direct clutch return spring to deform.

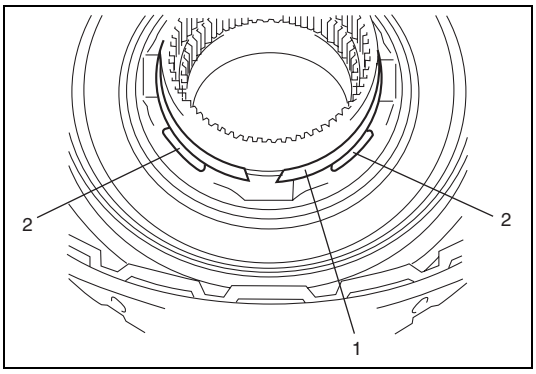

6) Install snap ring (1) as set snap ring end gap between snap ring stoppers (2) of clutch balancer No.2.

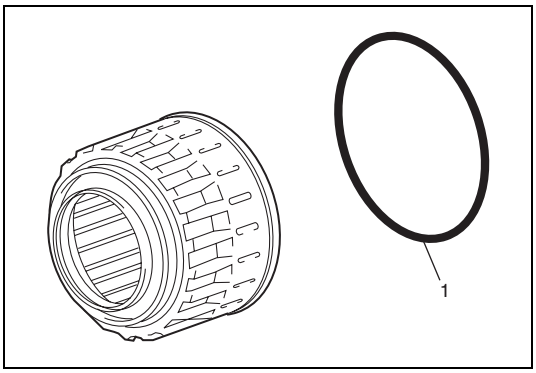

7) Apply A/T fluid to new O-ring (1) and then install O-ring to reverse clutch piston sub assembly.

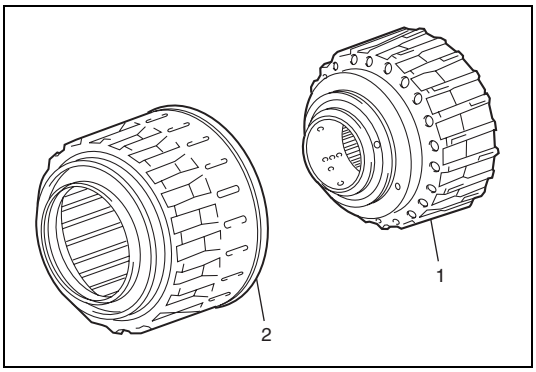

8) Press-fit clutch drum sub assembly (1) into reverse clutch piston (2) by hands.

CAUTION:
Do not twist or deviate O-rings during installation.

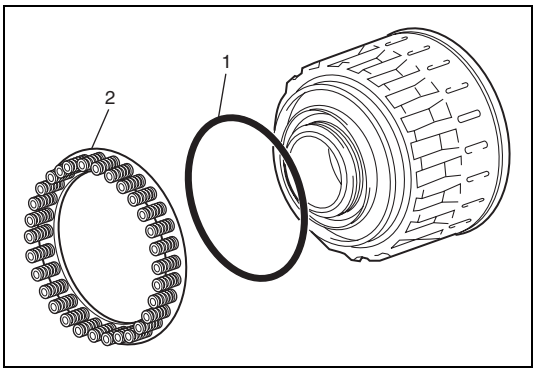

9) Apply A/T fluid to new O-ring (1) and then install O-ring to reverse clutch piston sub assembly.
10) Install reverse clutch return spring (2) onto reverse clutch piston sub assembly.

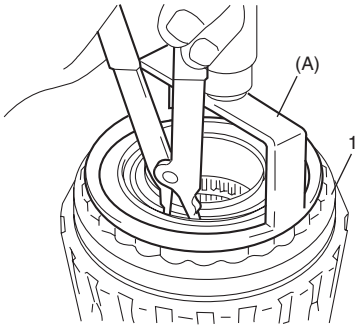

11) Place clutch balancer No.3 (1) onto reverse clutch piston sub assembly.

CAUTION:
Do not twist or deviate O-ring during installation.

12) Compress clutch balancer No.3 (1) until the clutch balancer No.3 is lowered to the place 1 – 2 mm (0.039 – 0.078 in.) from the snap ring groove by using special tool and hydraulic press, and then install snap ring.

CAUTION:
Be careful when applying pressure, for overpressure will cause reverse clutch return spring to deform.

Special tool
(A) : 09925-96040

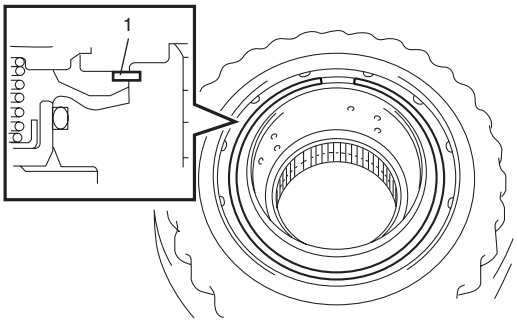

13) Set end gap of snap ring (1) in piston as shown in figure.

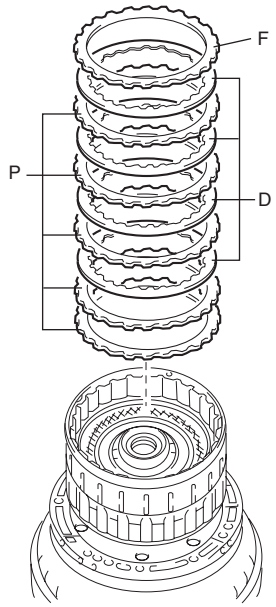

14) Install direct clutch plates “P” and direct clutch discs “D” in the following order.
P - P - D - P - D - P - D - P - D
15) Install direct clutch flange “F”.

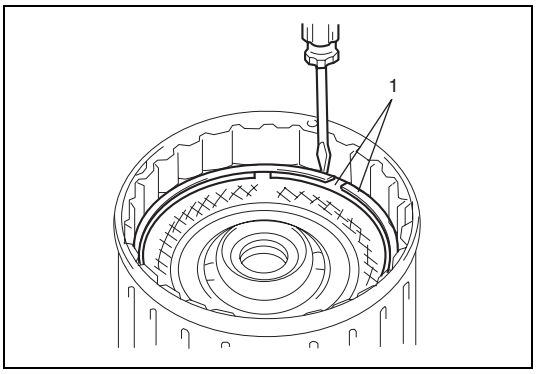

16) Install 2 snap rings (1) by using flat end rod or the like being sure not to align snap rings end gap with cut portion of clutch drum sub assembly.

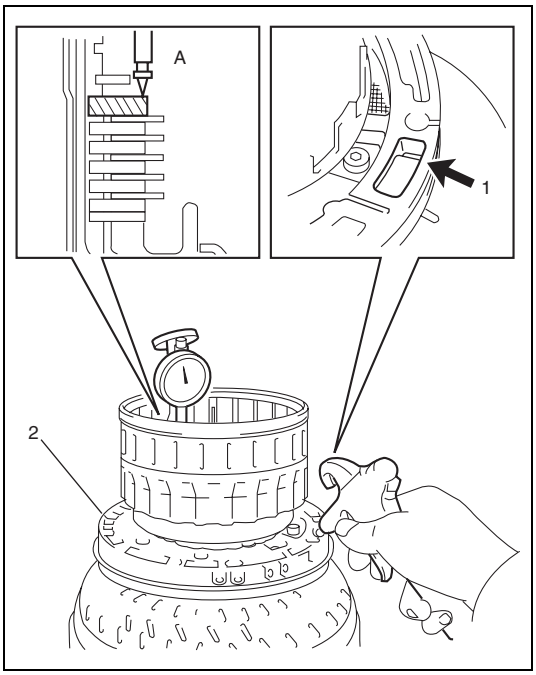

17) Measure pack clearance of direct clutch by applying compressed air (392 kPa, 4.0 kg/cm^2, 57 psi) into oil hole (1) of oil pump (2) as shown in figure.

Direct clutch pack clearance :
0.50 – 0.80 mm (0.020 – 0.031 in.)

NOTE:

Install a selective flange (t 3.4 mm) when measuring the moving distance. (shaded area in figure.)

- Flange moving distance A :
  0.36 – 1.242 mm (0.0141 – 0.0489 in.)
  Piston stroke :
  Flange moving distance A – 0.15 mm (0.0059 in.)
  If the pack clearance is out of specification, select another flange with suitable thickness from the list below and replace it.

Available direct clutch flange thickness

Identification No.	Thickness	Identification No.	Thickness
0	3.0 mm (0.118 in.)	5	3.5 mm (0.138 in.)
1	3.1 mm (0.122 in.)	6	3.6 mm (0.142 in.)
2	3.2 mm (0.126 in.)	7	3.7 mm (0.146 in.)
3	3.3 mm (0.130 in.)	8	3.8 mm (0.150 in.)
4	3.4 mm (0.134 in.)	–	–

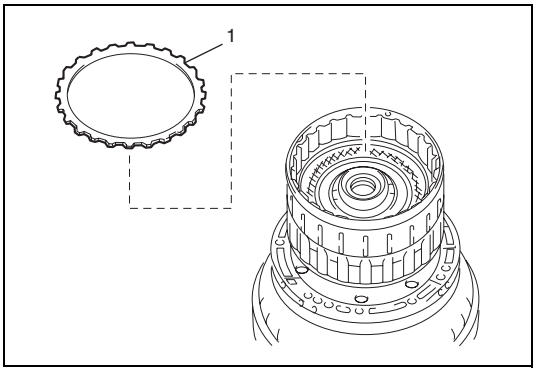

18) Install reverse clutch flange (1).

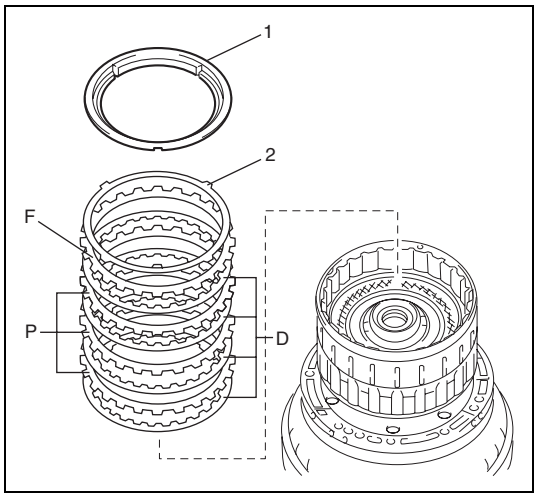

19) Install reverse clutch reaction sleeve (1), clutch cushion plate (2), reverse clutch flange “F”, reverse clutch discs “D” and reverse clutch plates “P” in the following order.
D - P - D - P - D - P - D - P - D - F

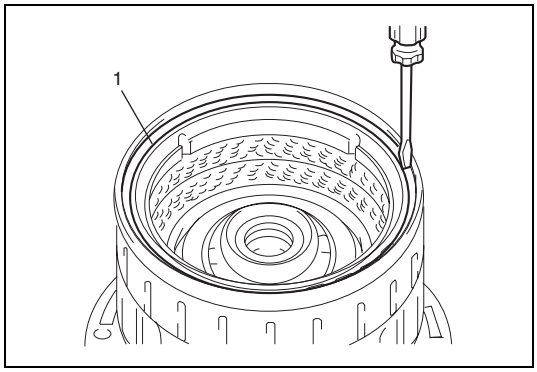

20) Install snap ring (1) by using flat end rod or the like being sure not to align snap ring end gap with cut portion of clutch drum sub assembly.

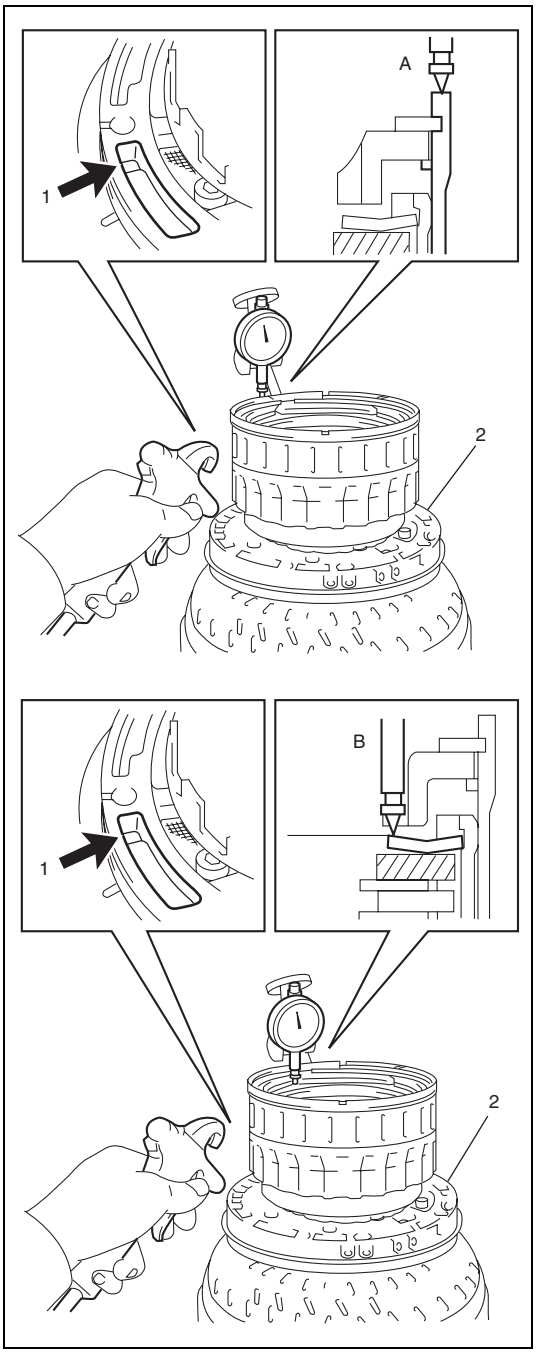

21) Measure reverse clutch piston stroke (A) and the moving distance (B) of reverse clutch flange at the both end across a diameter by applying compressed air (392 kPa, 4 kg/cm^2, 57 psi) into oil hole (1) of oil pump (2) as shown in figure.

Pack Clearance :
0.5 – 0.8 mm (0.020 – 0.031 in.)

NOTE:

Install selective flange (t 3.3 mm) when measuring the moving distance. (shaded area in figure)

- Piston stroke A : 1.69 – 2.81 mm (0.0665 – 0.11 in.)
  Flange moving distance B :
  1.20 – 1.68 mm (0.0472 – 0.0661 in.)
  Pack clearance : Piston stroke A – Flange moving distance B – 0.06
  If the pack clearance is out of specification, select another flange with suitable thickness from the list below and replace it.

Available reverse clutch flange thickness

Identification No.	Thickness	Identification No.	Thickness
0	2.8 mm (0.110 in.)	6	3.4 mm (0.134 in.)
1	2.9 mm (0.114 in.)	7	3.5 mm (0.138 in.)
2	3.0 mm (0.118 in.)	8	3.6 mm (0.142 in.)
3	3.1 mm (0.122 in.)	9	3.7 mm (0.146 in.)
4	3.2 mm (0.126 in.)	A	3.8 mm (0.150 in.)
5	3.3 mm (0.130 in.)	–	–

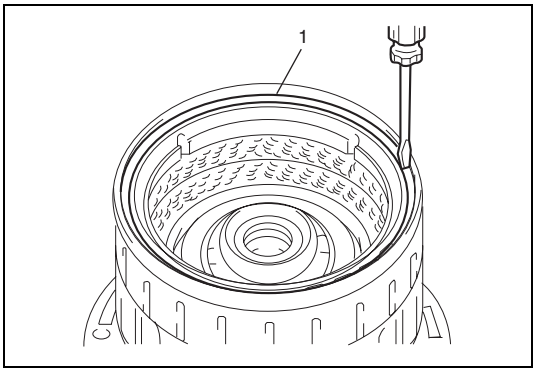

22) Remove snap ring (1) from clutch drum sub assembly by using flat end rod or the like.

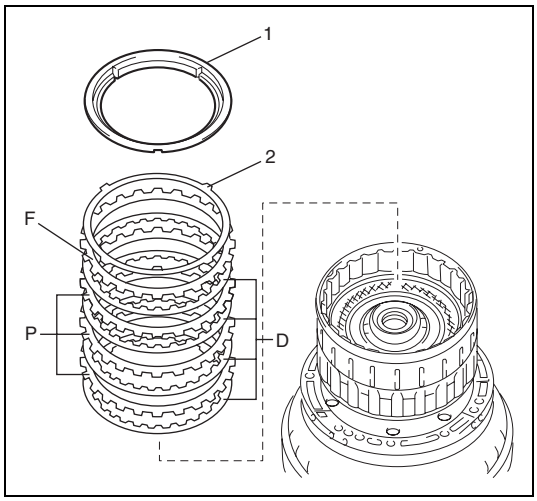

23) Remove reverse clutch reaction sleeve (1), clutch cushion plate (2), reverse clutch flange “F”, reverse clutch discs “D” and clutch plates “P” from clutch drum sub assembly.

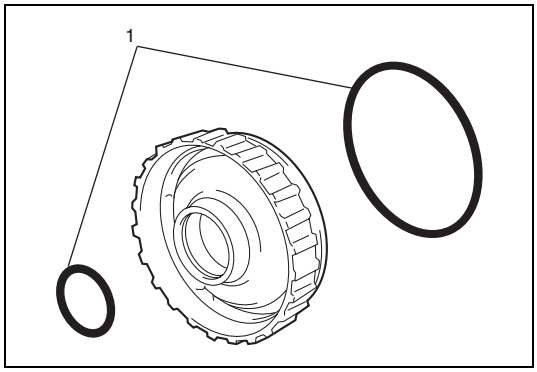

24) Apply A/T fluid to new 2 O-rings (1) and then install O-rings to forward clutch piston.

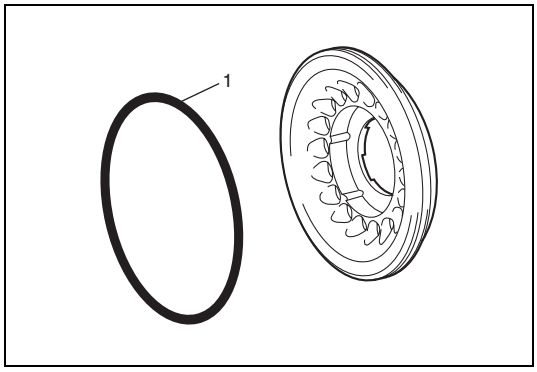

25) Apply A/T fluid to new O-ring (1), and then install O-ring to clutch balancer No.1.

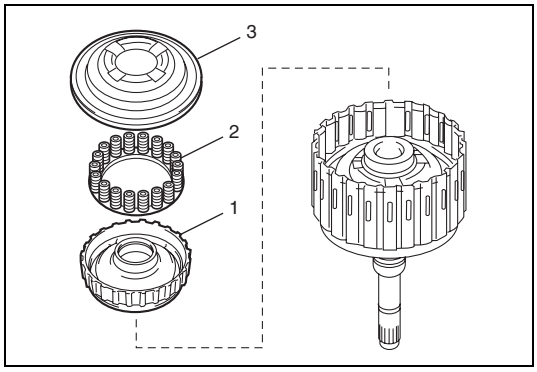

26) Install forward clutch piston (1), clutch balancer No.1 (3) and forward clutch return spring (2).

CAUTION:
Do not twist or deviate O-rings during installation.

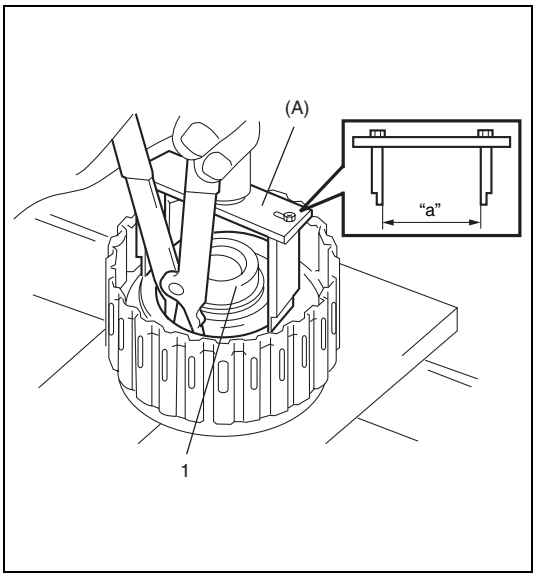

27) Compress clutch balancer No.1 (1) until the clutch balancer No.1 is lowered to the place 1 – 2 mm (0.039 – 0.078 in.) from the snap ring groove by using special tool and hydraulic press.

CAUTION:

Be careful when applying pressure, for overpressure will cause forward clutch return spring to deform.

NOTE:

Set special tool to the width of "a" 68 mm (2.652 in.) as shown in figure.

Special tool
(A) : 09926-96520

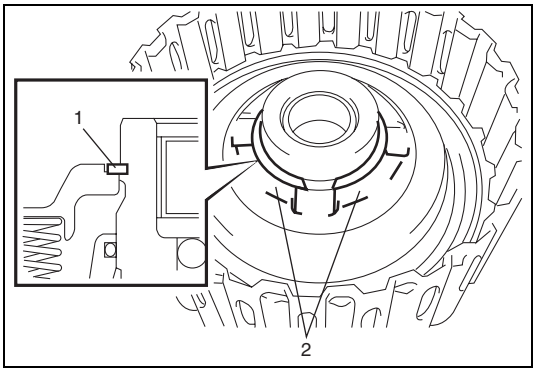

28) Install snap ring as set snap ring end gap between snap ring stoppers (2) of clutch balancer No.1.

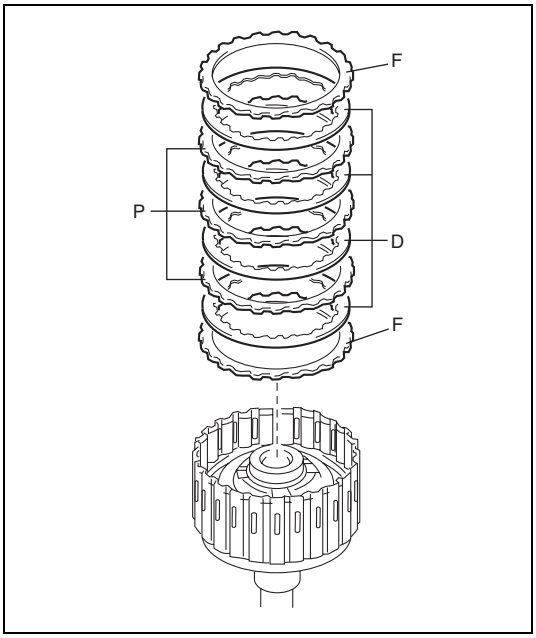

29) Install forward clutch flange "F".
30) Install clutch plates "P", forward clutch flange "F" and clutch discs "D" in the following order.
D - P - D - P - D - P - D - F

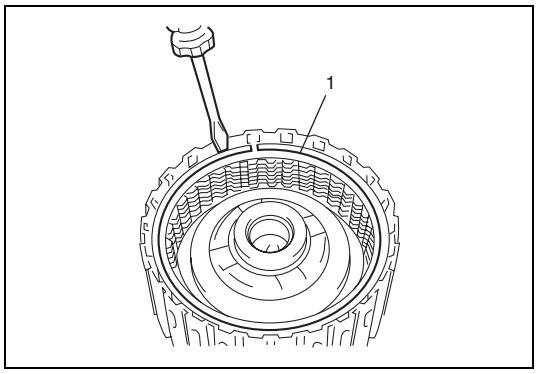

31) Install snap ring (1) by using flat end rod or the like being sure not to align snap ring end gap with cut portion of input shaft assembly.

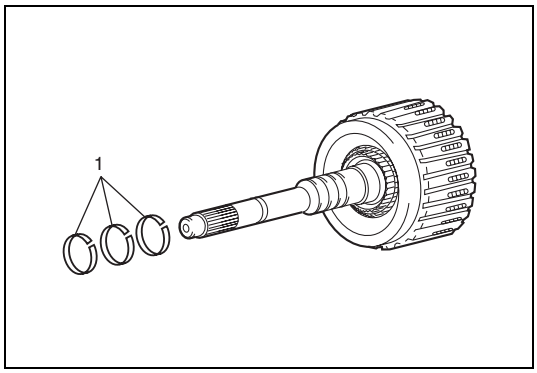

32) Apply A/T fluid to 3 oil seal rings (1).
33) Squeeze the ends of 3 oil seal rings (1) together and then install oil seal rings to input shaft groove.

CAUTION:
Do not spread seal excessively.

34) Check seals rotate smoothly.

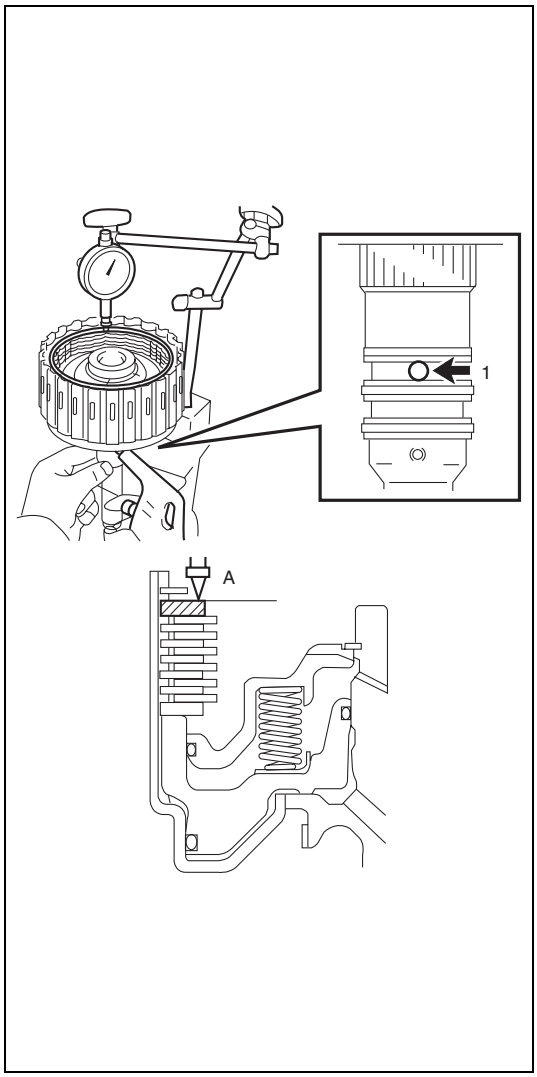

35) Measure forward clutch pack clearance (A) by applying compressed air (392 kPa, 4.0 kg/cm^2, 57 psi) into oil hole (1) of input shaft as shown in figure.

Pack Clearance :
0.4 – 0.7 mm (0.016 – 0.027 in.)

NOTE:

Install a selective flange (t 3.4 mm) when measuring the moving distance. (shaded area in figure.)

- Flange moving distance A :
  0.12 – 1.19 mm (0.0472 – 0.0468 in.)
  Pack Clearance :
  Flange moving distance A – 0.01 mm (0.00039 in.)
  If pack clearance is out of specification, select another flange with suitable thickness from the list below and replace it.

Available forward clutch flange thickness

Identification No.	Thickness	Identification No.	Thickness
0	3.0 mm (0.118 in.)	6	3.6 mm (0.142 in.)
1	3.1 mm (0.122 in.)	7	3.7 mm (0.146 in.)
2	3.2 mm (0.126 in.)	8	3.8 mm (0.150 in.)
3	3.3 mm (0.130 in.)	9	3.9 mm (0.154 in.)
4	3.4 mm (0.134 in.)	A	4.0 mm (0.158 in.)
5	3.5 mm (0.138 in.)	–	–

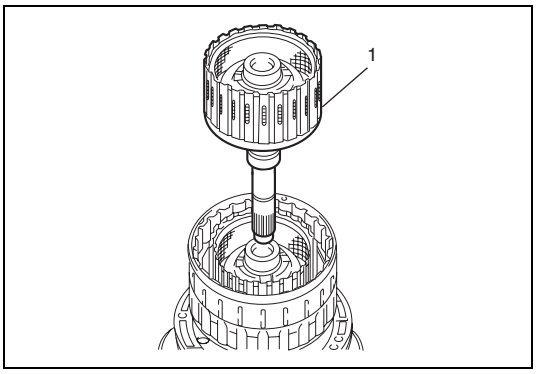

36) Install input shaft assembly (1) to clutch drum assembly.

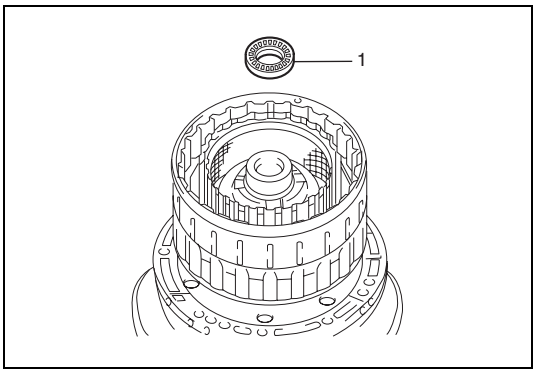

37) Install thrust needle roller bearing (1) to clutch drum assembly.

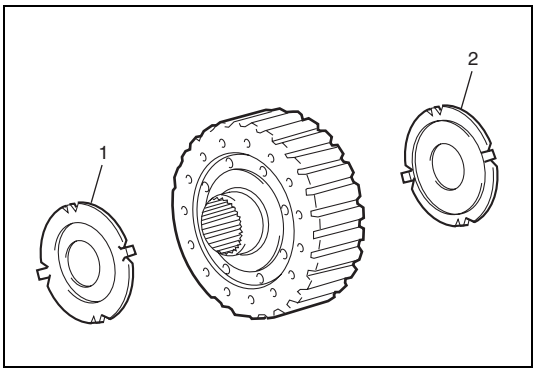

38) Install thrust bearing race No.2 (1) and input shaft thrust bearing race (2) to forward clutch hub.

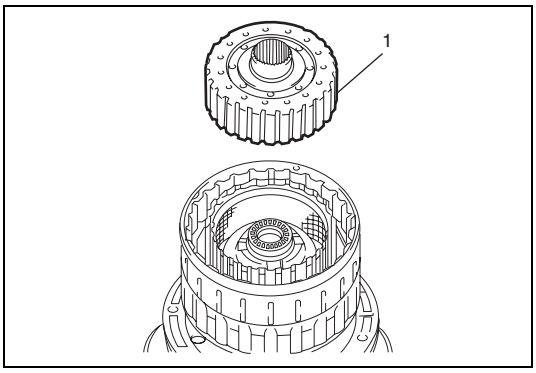

39) Install forward clutch hub (1) to clutch drum assembly.

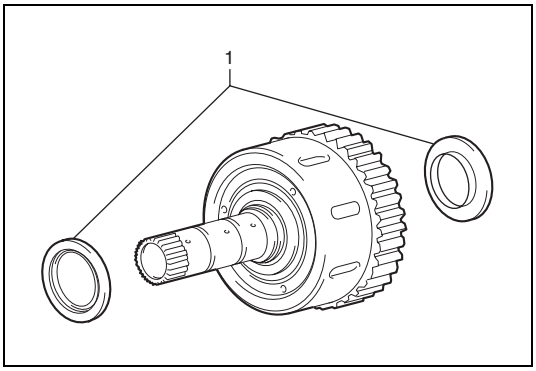

40) Install 2 thrust needle roller bearings (1) to direct clutch hub.

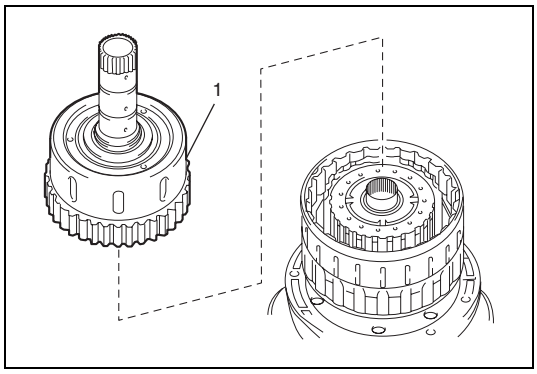

41) Install direct clutch hub (1) to clutch drum assembly.

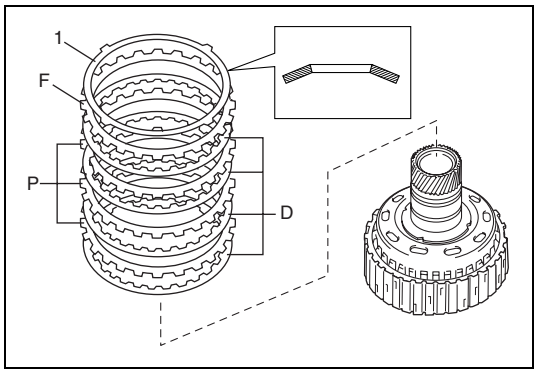

42) Install reverse clutch plates “P” and reverse clutch discs “D” to reverse clutch hub in the following order.
D - P - D - P - D - P - D
43) Install reverse clutch flange “F”.
44) Install clutch cushion plate (1) to reverse clutch hub as shown in figure.

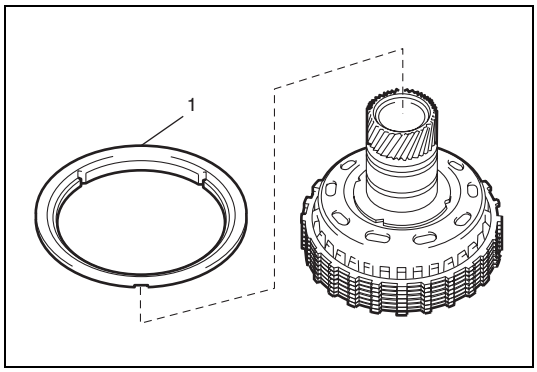

45) Install reverse clutch reaction sleeve (1) to reverse clutch hub.

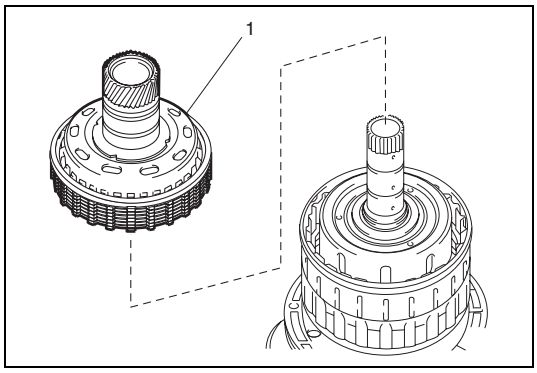

46) Install reverse clutch hub sub assembly (1) including reverse clutch reaction sleeve, clutch cushion plate, reverse clutch flange, 4 reverse clutch discs and 3 reverse clutch plates to clutch drum assembly.

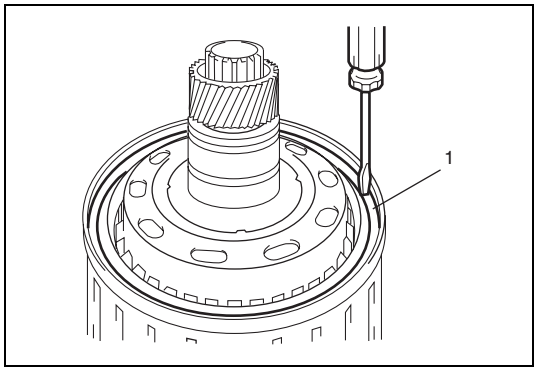

47) Install snap ring (1) on clutch drum and input shaft assembly by using flat end rod or the like.

Valve Body Assembly

Components

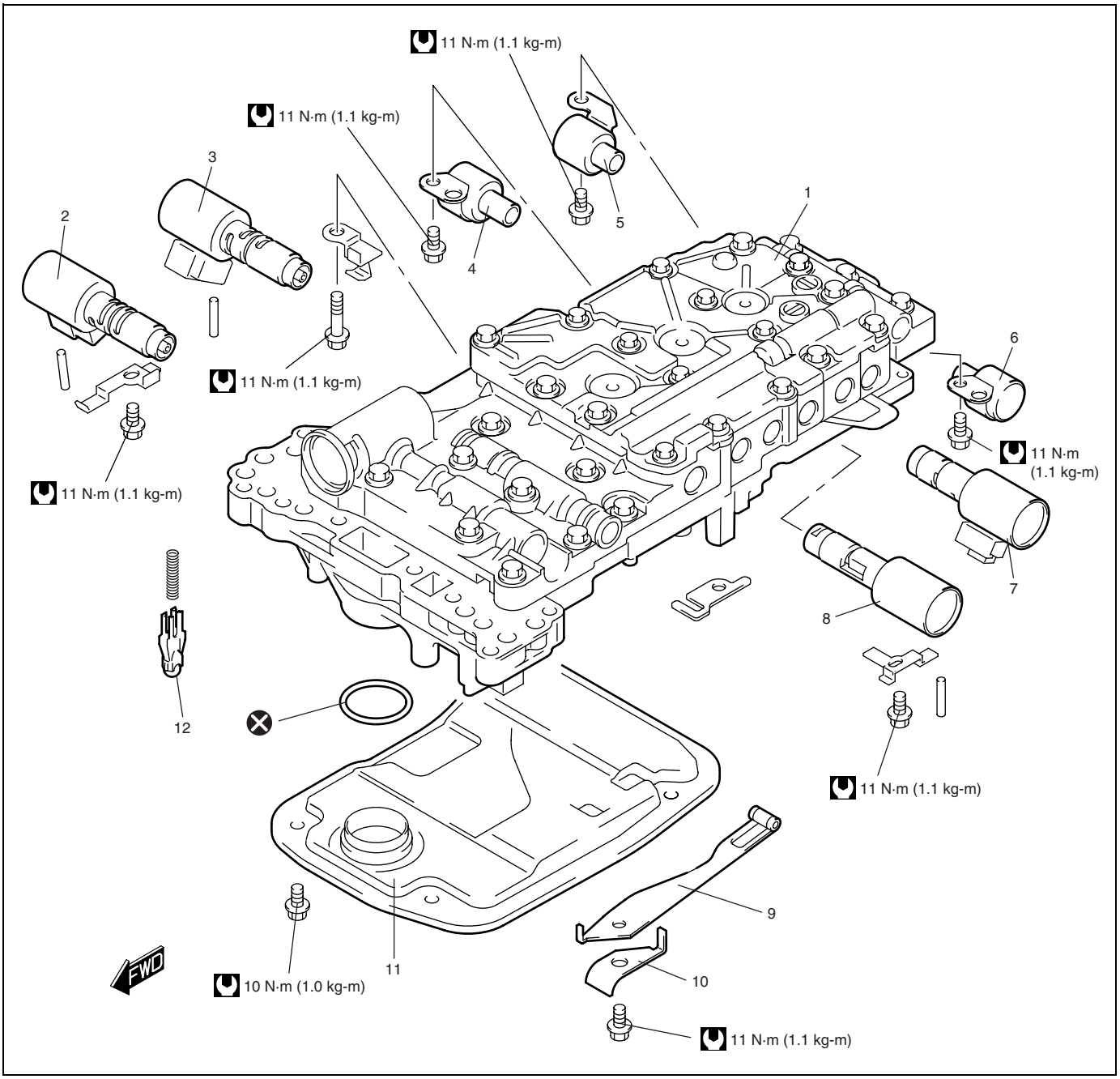

1. Valve body assembly	6. Shift solenoid valve-E	11. Oil strainer
2. Pressure control solenoid valve-A	7. Pressure control solenoid valve-C	12. Check ball body
3. Pressure control solenoid valve-B	8. TCC solenoid	: Tightening torque
4. Shift solenoid valve-A	9. Manual shaft lever spring	: Do not reuse.
5. Shift solenoid valve-B	10. Spring plate	

CAUTION:

When replacing pressure control solenoid valve-A, -B, -C and TCC solenoid valve, it is strictly required to replace it together with valve body assembly as a set.

Unit Assembly

Assembly

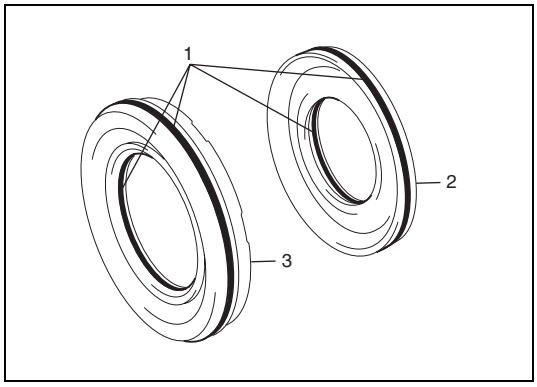

1) After applying A/T fluid to new 4 O-rings (1) and then install O-rings to 1st & reverse (No.4) brake inner piston (2) and brake reaction sleeve (3).
2) Install 1st & reverse (No.4) brake inner piston (2) to brake reaction sleeve (3).

CAUTION:
Do not twist or deviate O-rings (1) during installation.

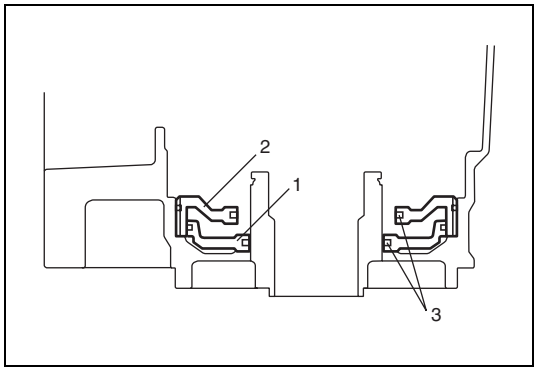

3) Install 1st & reverse (No.4) brake inner piston (1) including brake reaction sleeve (2) to transmission case.

CAUTION:
Do not twist or deviate O-rings (3) during installation.

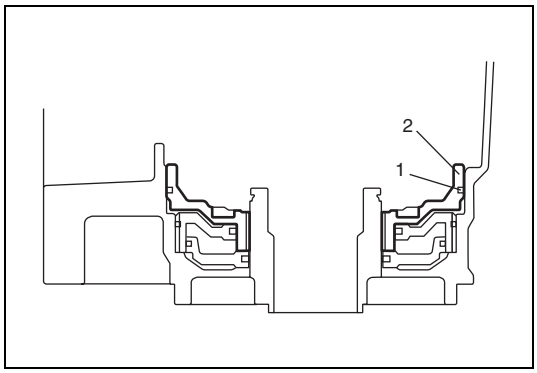

4) After applying A/T fluid to new O-ring (1) and then install O-ring to 1st & reverse (No.4) brake piston (2).
5) Install 1st & reverse (No.4) brake piston (2) to transmission case.

CAUTION:
Do not twist or deviate O-ring (1) during installation.

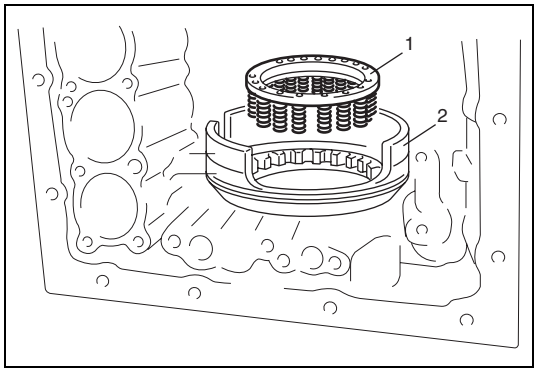

6) Place 1st & reverse (No.4) brake return spring (1) on 1st & reverse (No.4) brake piston (2).

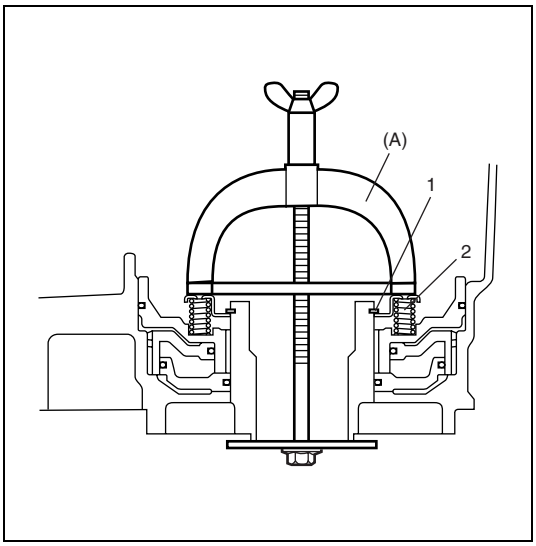

7) Place snap ring (1) on 1st & reverse (No.4) brake return spring and compress 1st & reverse (No.4) brake return spring (2) until the 1st & reverse (No.4) brake return spring is lowered to the place 1 – 2 mm (0.039 – 0.078 in.) from the snap ring groove by using special tool.

CAUTION:
Be careful when applying pressure, for overpressure will cause plate section of 1st & reverse (No.4) brake return spring to deform.

Special tool
(A) : 09922-86010

8) Install snap ring (1).

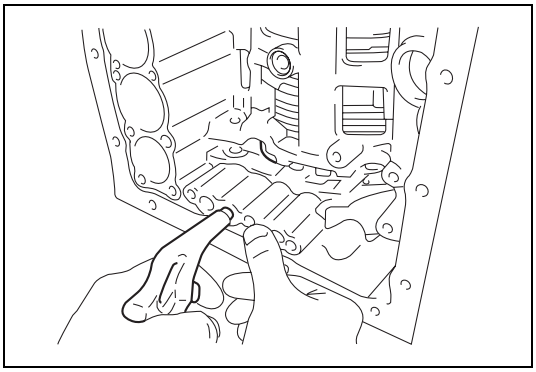

9) Make sure 1st & reverse (No.4) brake piston and 1st & reverse (No.4) brake inner piston move smoothly when applying low pressure compressed air (392 kPa, 4.0 kg/cm^2, 57 psi) into oil hole of transmission case.

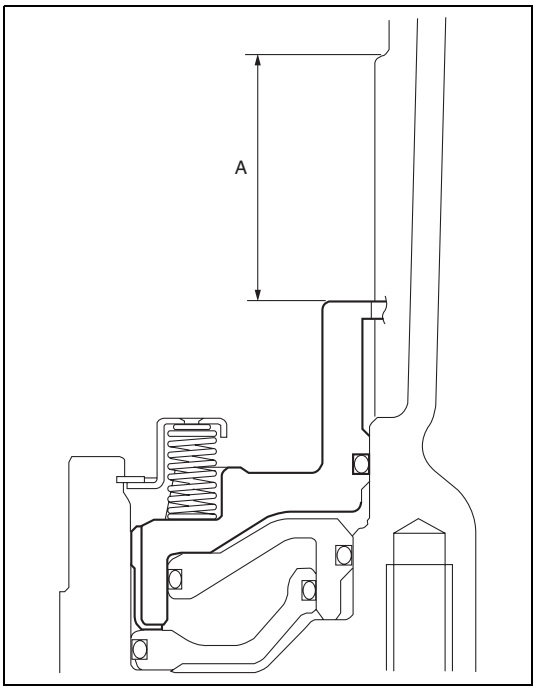

10) Using vernier calipers, measure the level difference (length A) between the upper surface of the 1st & reverse (No.4) brake piston and the hitting surface of 1st & reverse (No.4) brake flange at the both end across a diameter, and calculate the average.

NOTE:
- **1st & reverse (No.4) brake piston must be installed tightly to the end face of transmission case.**
- **Length A :**
  32.68 – 33.42 mm (1.287 – 1.316 in.)

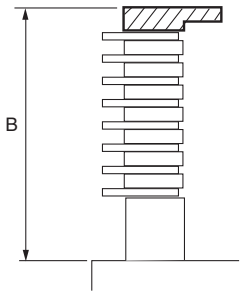

11) Using vernier calipers, measure the thickness (length B) of the 2 1st & reverse (No.4) brake flanges, the 6 1st & reverse (No.4) brake plates and the 7 1st & reverse (No.4) brake discs altogether at the both end across a diameter, and calculate the average.

Pack Clearance :
0.7 – 1.0 mm (0.028 – 0.039 in.)

- Pack Clearance :
  Length A – Length B + 1.36 mm (0.0535 in.)
  Length B : 30.59 – 31.62 mm (1.204 – 1.244 in.)

12) If the pack clearance is out of specification, select another 1st & reverse (No.4) brake flange with suitable thickness from the list below and replace it.

Available 1st & reverse (No.4) brake flange thickness

Identification No.	Thickness	Identification No.	Thickness
0	0 mm (0 in.)	8	0.8 mm (0.032 in.)
2	0.2 mm (0.008 in.)	10	1.0 mm (0.039 in.)
4	0.4 mm (0.016 in.)	12	1.2 mm (0.047 in.)
6	0.6 mm (0.024 in.)	14	1.4 mm (0.055 in.)

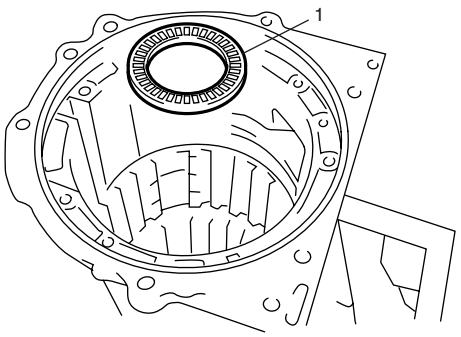

13) After applying A/T fluid to thrust needle roller bearing (1), install thrust needle roller bearing (1) to transmission case.

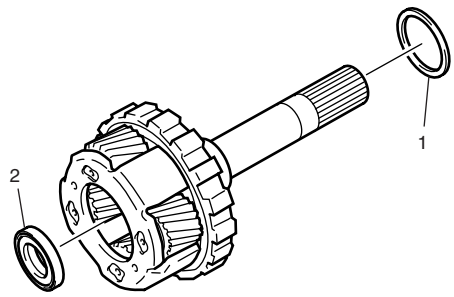

14) After applying A/T fluid to thrust needle roller bearing (2) and thrust bearing race No.9 (1) and then install thrust needle roller bearing (2) and thrust bearing race No.9 (1) to rear planetary ring gear.

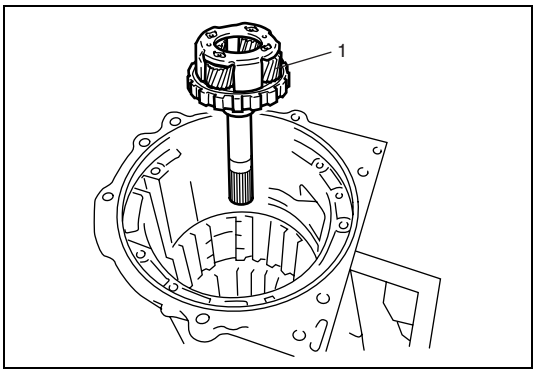

15) Install rear planetary gear assembly (1).

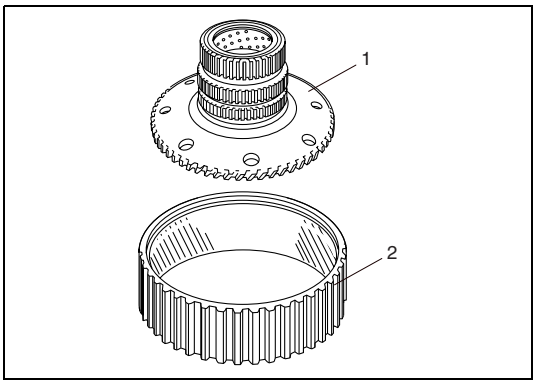

16) Place rear planetary flange (1) on rear planetary ring gear (2).

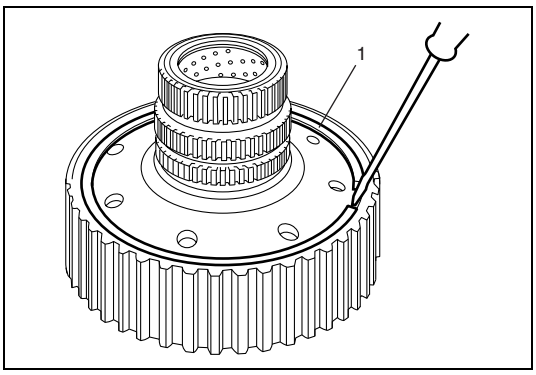

17) Install snap ring (1) by using flat end rod or the like.

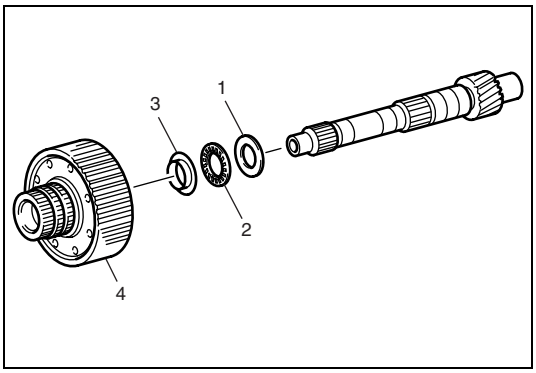

18) Install thrust bearing race No.8 (1), thrust needle roller bearing (2), thrust bearing race No.7 (3) and planetary ring gear flange assembly (4) to intermediate shaft.

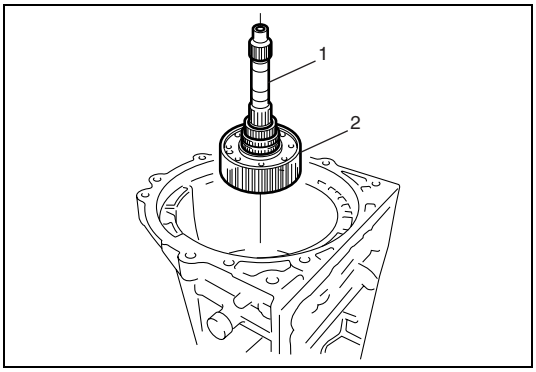

19) Install intermediate shaft (1) including planetary ring gear flange assembly (2) to transmission case.

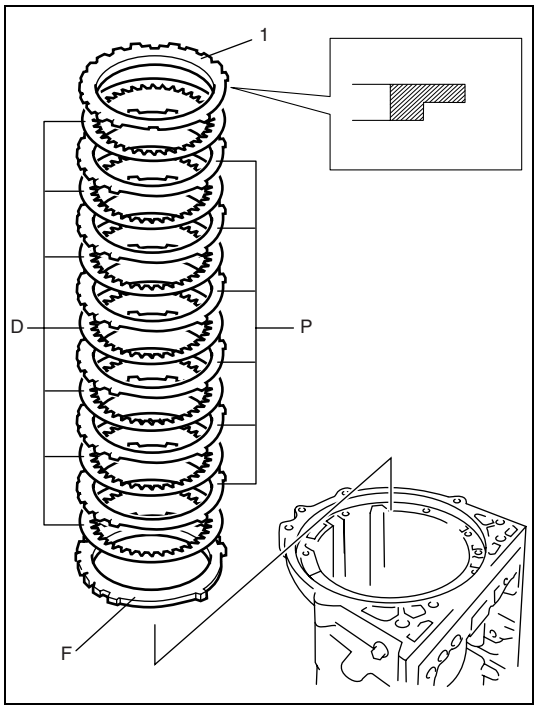

20) Install 1st & reverse (No.4) brake flange “F”, 1st & reverse (No.4) brake discs “D” and 1st & reverse (No.4) brake plates “P” in the following order.
F - D - P - D - P - D - P - D - P - D - P - D - P - D
21) Install 1st & reverse (No.4) brake flange (1) with flat side of flange facing to toward the upside.

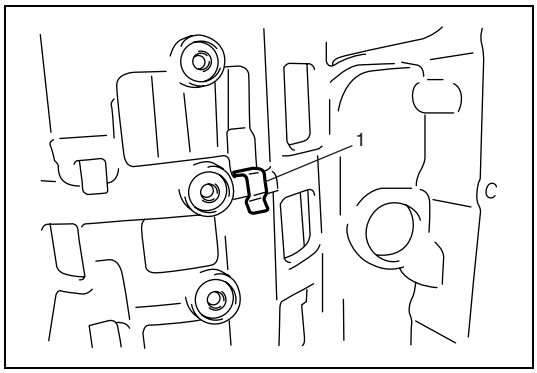

22) Install brake plate stopper spring (1) to transmission case.

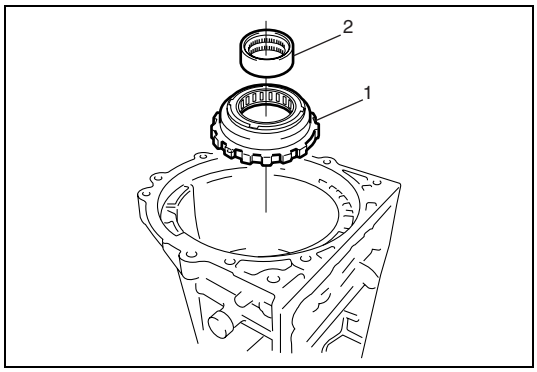

23) Install one-way No.3 clutch assembly (1) including one-way No.3 clutch inner race (2) to transmission case.

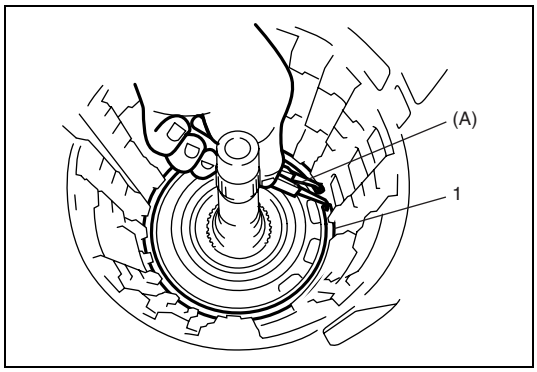

24) Install snap ring (1) by using special tool being sure not to align snap ring end gap with cut portion of transmission case.

Special tool
(A) : 09966-06108

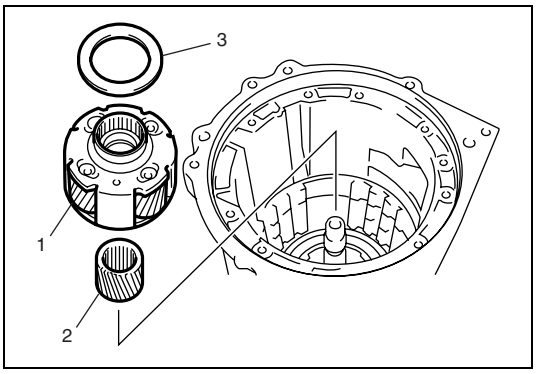

25) Install thrust bearing race No.4 (3) to middle planetary gear assembly (1).
26) Install middle planetary gear assembly (1) including planetary sun gear (2) into intermediate shaft.

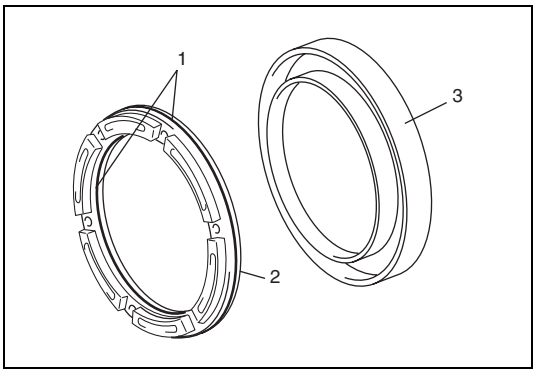

27) After applying A/T fluid to new 2 O-rings (1) and then install O-rings to No.2 brake piston (2).
28) Install No.2 brake piston (2) to No.2 brake cylinder (3).

CAUTION:
Do not twist or deviate O-ring during installation.

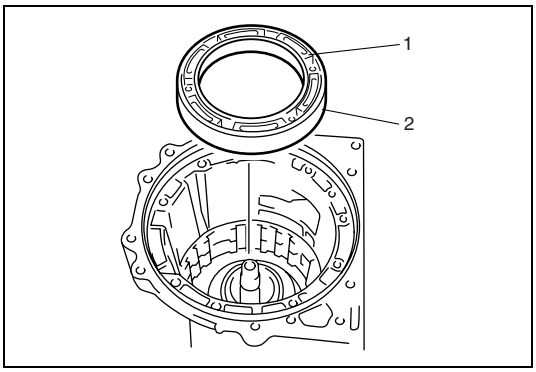

29) Install No.2 brake cylinder (2) including No.2 brake piston (1) to transmission case.

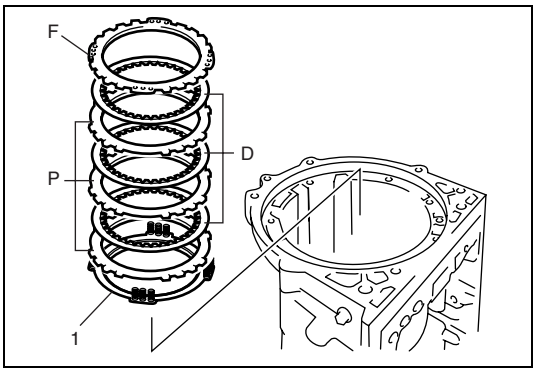

30) Install No.2 brake piston return spring (1) with spring side of plate facing to No.2 brake disc side.
31) Install No.2 brake discs “D” and No.2 brake plates “P” in the following order.
P - D - P - D - P - D
32) Install No.2 brake flange “F” with spring flange side of flange facing to No.2 brake disc side.

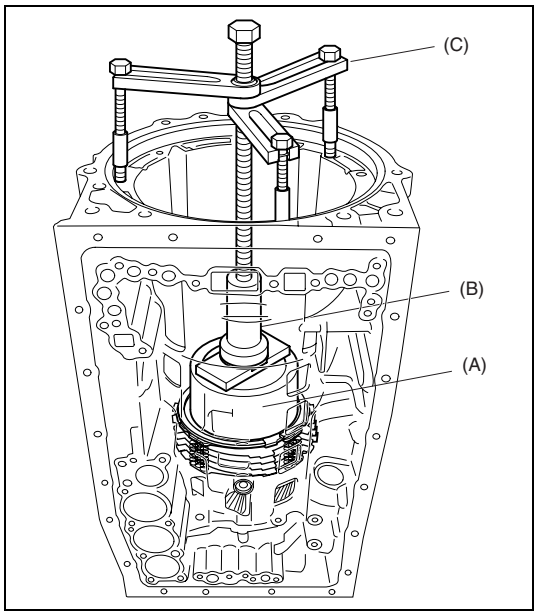

33) Compress No.2 brake piston return spring until the No.2 brake flange is lowered to the place 1 – 2 mm (0.039 – 0.078 in.) from the snap ring groove by using special tool.

CAUTION:
Be careful when applying pressure, for overpressure will cause No.2 brake return spring to deform.

Special tool
(A) : 09927-66510
(B) : 09913-85210
(C) : 09920-13120

34) Place snap ring on No.2 brake flange being sure not to align snap ring end gap with cut portion transmission case.

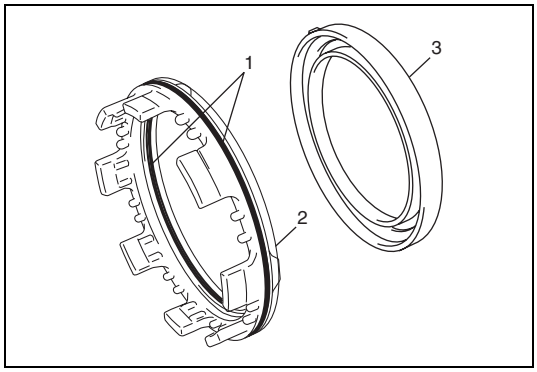

35) After applying A/T fluid to new 2 O-rings (1) and then install O-rings to No.1 brake piston (2).
36) Install No.1 brake piston (2) to No.1 brake cylinder (3).

CAUTION:
Do not twist or deviate O-ring during installation.

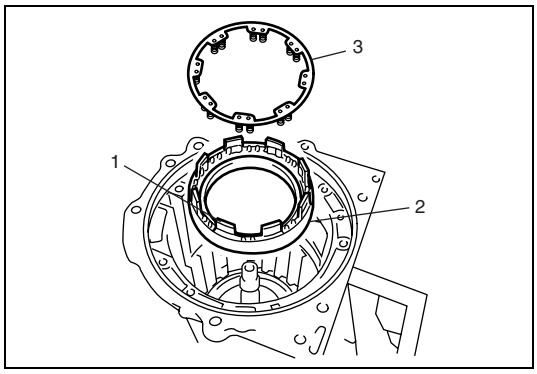

37) Install No.1 brake cylinder (2) including No.1 brake piston (1) to transmission case.
38) Place No.1 brake piston return spring (3) on No.1 brake piston (1).

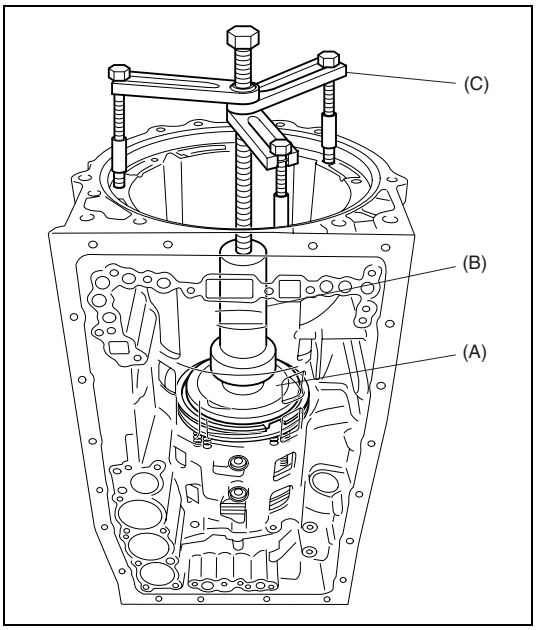

39) Compress No.1 brake piston return spring until the No.1 brake piston return spring is lowered to the place 1 – 2 mm (0.039 – 0.078 in.) from the snap ring groove by using special tool.

CAUTION:
Be careful when applying pressure, for overpressure will cause plate section of No.1 brake piston return spring to deform.

Special tool
(A) : 09927-66530
(B) : 09913-85210
(C) : 09920-13120

40) Place snap ring on No.1 brake piston being sure not to align snap ring end gap with cut portion transmission case.

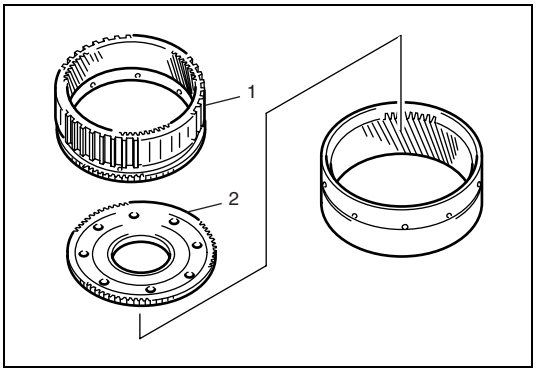

41) Install middle planetary ring gear (1) and front planetary ring gear flange (2) onto front planetary ring gear.

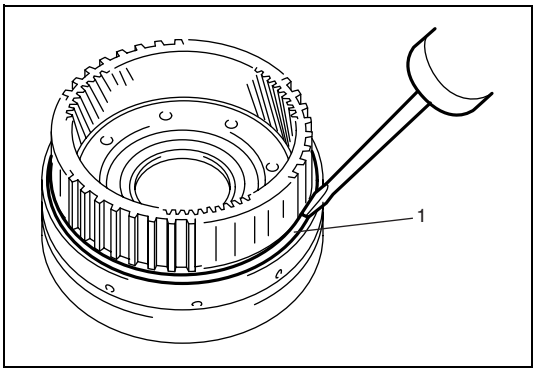

42) Install snap ring (1) by using flat end rod or the like.

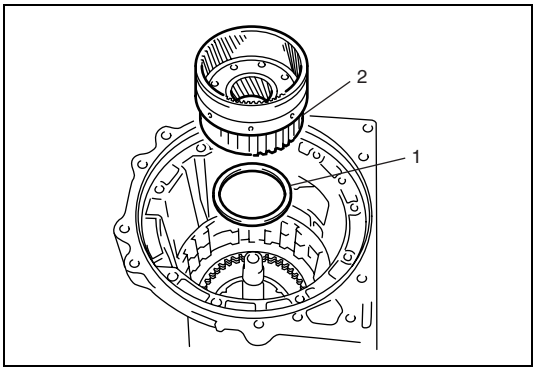

43) After applying petroleum jelly to thrust needle roller bearing (1) so that thrust needle roller bearing does not fall off.
44) Install front planetary ring gear (2) and thrust needle roller bearing (1) into intermediate shaft.

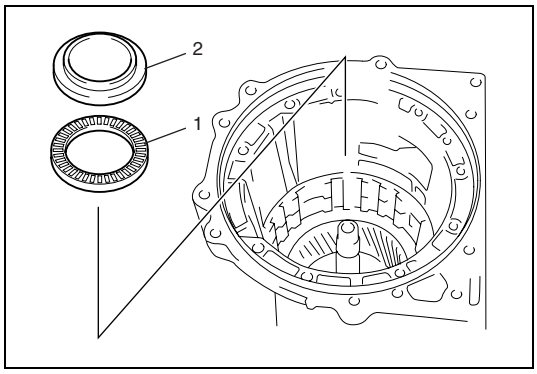

45) Install thrust needle roller bearing (1) and thrust bearing race No.3 (2) onto front planetary ring gear.

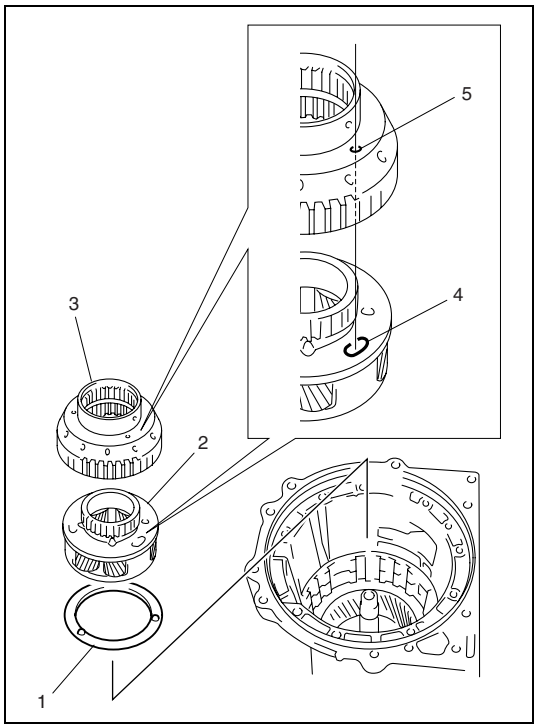

46) Fit planetary carrier thrust washer No.2 (1) to front planetary gear assembly (2) with petroleum jelly so that planetary carrier thrust washer No.2 (1) does not fall off.

NOTE:

Make sure projection part of planetary carrier thrust washer No.2 fit into holes of front planetary gear assembly.

47) Install front planetary gear assembly (2) and one-way No.1 clutch inner race (3) onto front planetary ring gear.

NOTE:

Make sure align front planetary gear assembly trenches (4) and one-way No.1 clutch inner race holes (5).

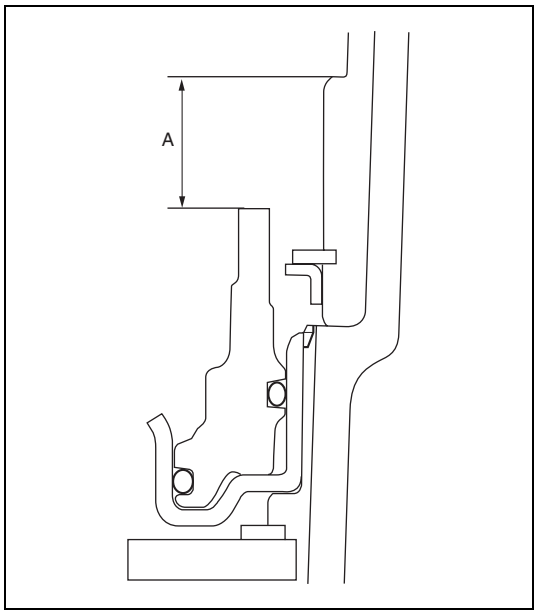

48) Using vernier calipers, measure the level difference (length A) between the upper surface of the No.1 brake piston and the hitting surface of No.1 brake flange at the both end across a diameter, and calculate the average.

NOTE:

- **No.1 brake piston must be installed tightly to the end face of transmission case.**
- **Length A : 15.29 – 15.77 mm (0.602 – 0.628 in.)**

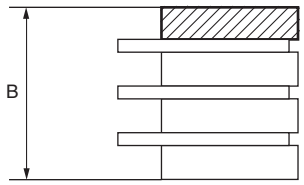

49) Using vernier calipers, measure the thickness (length B) of the brake flange the No.1 brake flange, the 3 No.1 brake plates and the 3 No.1 brake discs altogether at the both end across a diameter, and calculate the average.

Pack Clearance : 0.42 – 0.72 mm (0.017 – 0.028 in.)

- Pack Clearance : Length A – Length B
  Length B : 14.72 – 15.12 mm (0.58 – 0.595 in.)

50) If the pack clearance is out of specification, select another No.1 brake flange with suitable thickness from the list below and replace it.

Available No.1 brake flange thickness

Identification No.	Thickness	Identification No.	Thickness
0	2.0 mm (0.079 in.)	2	2.4 mm (0.094 in.)
1	2.2 mm (0.087 in.)	3	2.6 mm (0.102 in.)

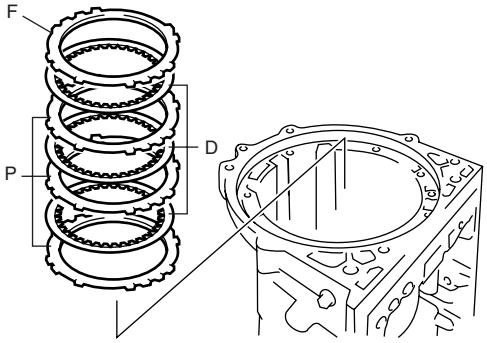

51) Install No.1 brake discs “D”, No.1 brake plates “P” and No.1 brake flange “F” in the following order.
P - D - P - D - P - D - F

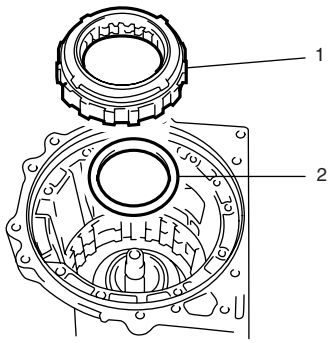

52) Install one-way No.1 clutch assembly (1) and planetary carrier thrust washer No.1 (2) to transmission case.

NOTE:

Make sure projection part of planetary carrier thrust washer No.1 fit into holes of one-way No.1 clutch inner race.

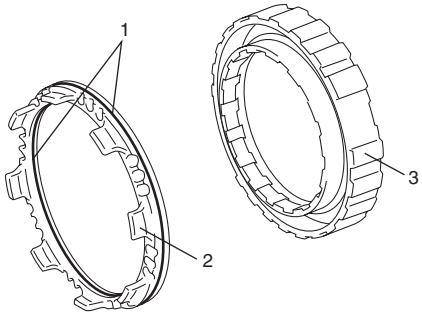

53) After applying A/T fluid to new 2 O-rings (1) and then install O-rings to 2nd (No.3) brake piston (2).
54) Install 2nd (No.3) brake piston (2) to 2nd (No.3) brake cylinder (3).

CAUTION:

Do not twist or deviate O-ring during installation.

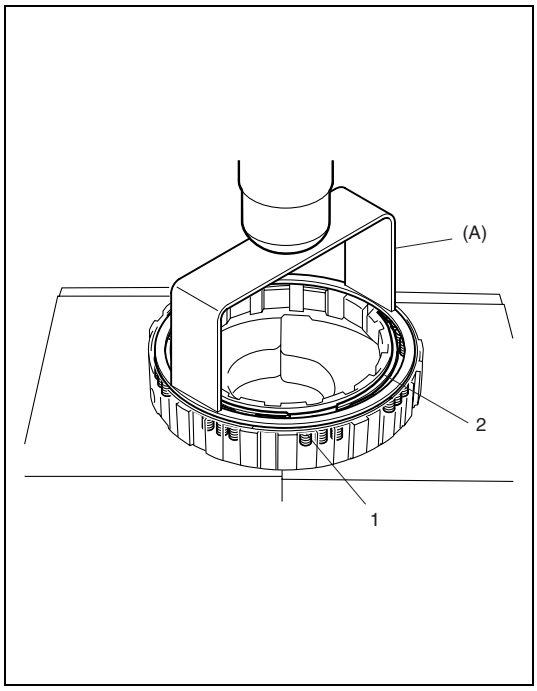

55) Place 2nd (No.3) brake piston return spring (1) on 2nd (No.3) brake piston.
56) Compress 2nd (No.3) brake piston return spring (1) until the 2nd (No.3) brake piston return spring is lowered to the place 1 – 2 mm (0.039 – 0.078 in.) from the snap ring groove by using special tool.

CAUTION:

Be careful when applying pressure, for overpressure will cause plate section of 2nd (No.3) brake return spring to deform.

Special tool
(A) : 09927-66540

57) Place snap ring (2) on 2nd (No.3) brake piston return spring retainer being sure not to align snap ring end gap with spring retainer claw.

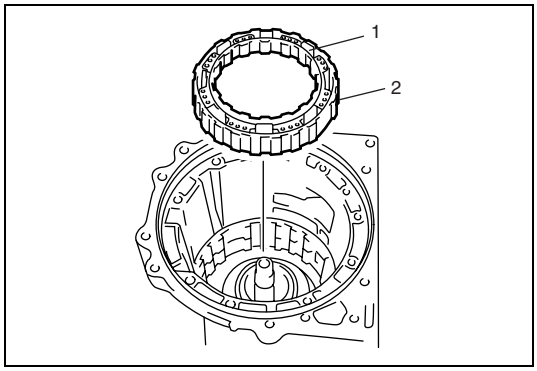

58) Install 2nd (No.3) brake piston (1) including 2nd (No.3) brake cylinder (2) to transmission case.

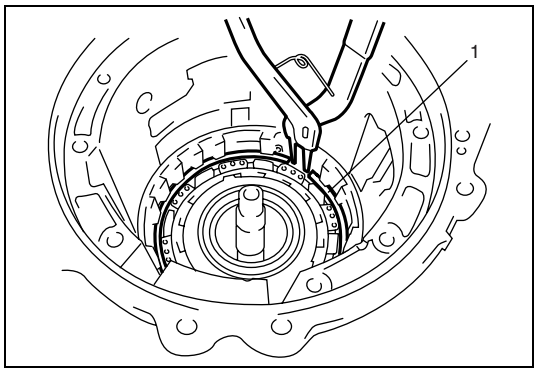

59) Install snap ring (1) by using special tool being sure not to align snap ring end gap with cut portion of transmission case.

Special tool
(A) : 09900-06108

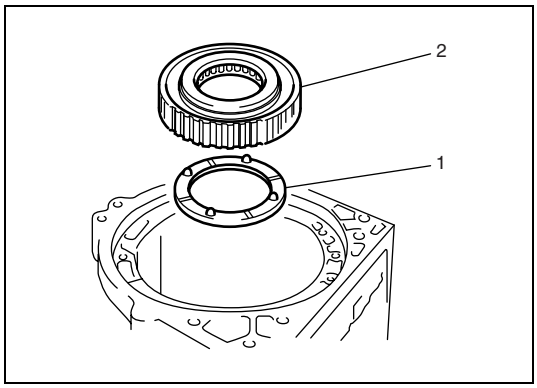

60) Fit clutch hub thrust washer (1) to one-way No.2 clutch assembly (2) with petroleum jelly so that clutch hub thrust washer (1) does not fall off.
61) Install clutch hub thrust washer (1) and one-way No.2 clutch assembly (2) to transmission case.

NOTE:

Make sure projection part of clutch hub thrust washer fit into holes of one-way No.2 clutch assembly.

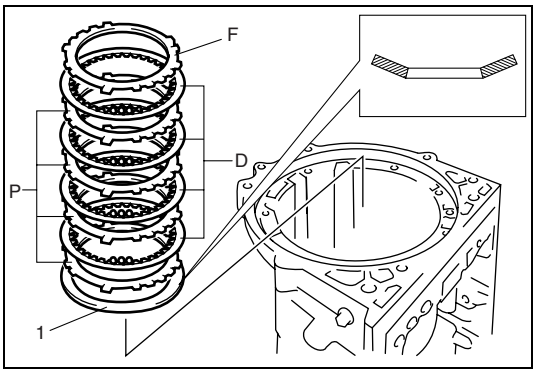

62) Install 2nd (No.3) brake cushion plate (1), 2nd (No.3) brake plates “P” and 2nd (No.3) brake discs “D”.
P - D - P - D - P - D - P - D
63) Install 2nd (No.3) brake flange “F”.

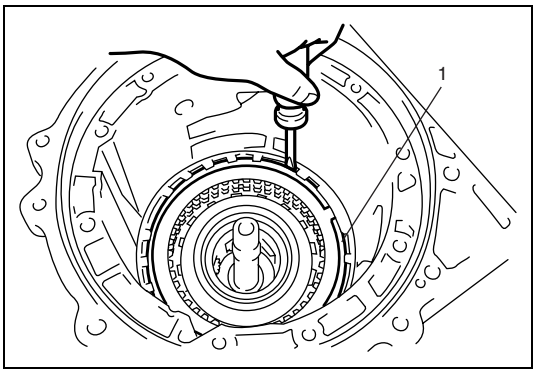

64) Install snap ring (1) by using flat end rod or the like being sure not to align snap ring end gap with cut portion of transmission case.

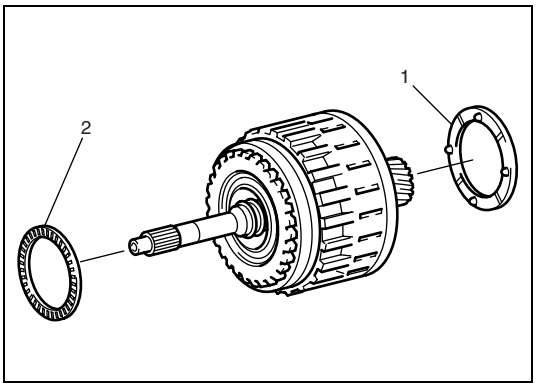

65) Fit clutch drum thrust washer No.2 (1) to clutch dram and input shaft assembly with petroleum jelly so that clutch drum thrust washer No.2 (1) does not fall off.

NOTE:

Make sure projection part of clutch drum thrust washer No.2 fit into holes of reverse clutch hub.

66) Install thrust needle roller bearing (2) to clutch dram and input shaft assembly.

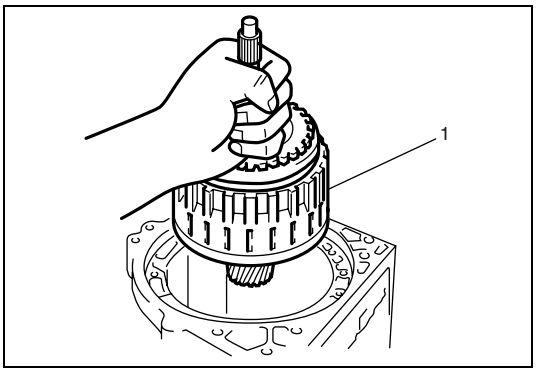

67) Install clutch dram and input shaft assembly (1) to transmission case.

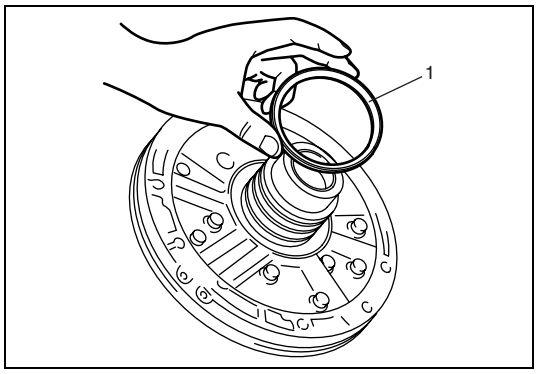

68) After applying petroleum jelly to thrust bearing race No.1 (1) so that bearing race does not fall off, install it to oil pump assembly.

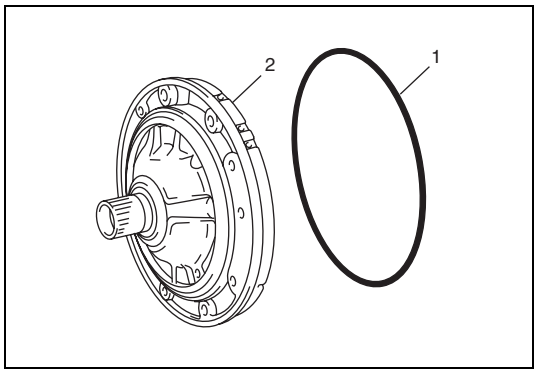

69) After applying A/T fluid to new O-ring (1) and then install O-ring to oil pump assembly (2).

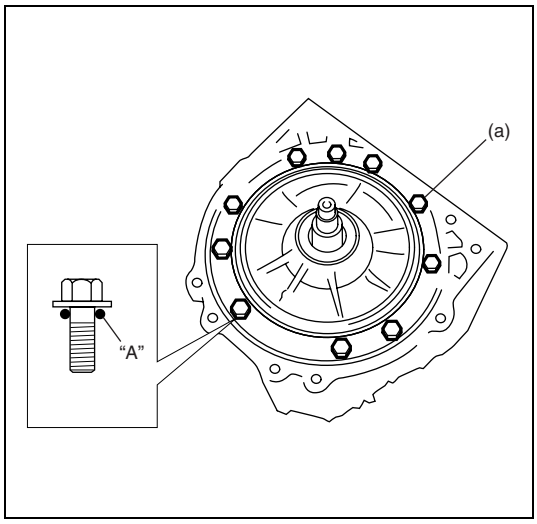

70) Install oil pump assembly aligning bolt holes in transmission case with oil pump assembly.
Apply seal packing to 10 oil pump bolts and tighten them by certain amount of torque at each time one after another till specified torque is attained.

Tightening torque
Oil pump bolts
(a) : 21 N·m (2.1 kg-m, 15.0 lb-ft)
"A" Sealant : 99000-31230

NOTE:

Make sure input shaft rotates smoothly.

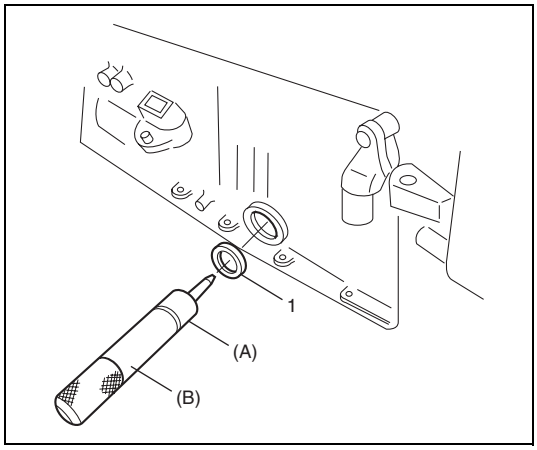

71) Install new 2 manual shift shaft oil seals (1) to transmission case by using special tools.

Special tool
(A) : 09917-98221
(B) : 09916-57330

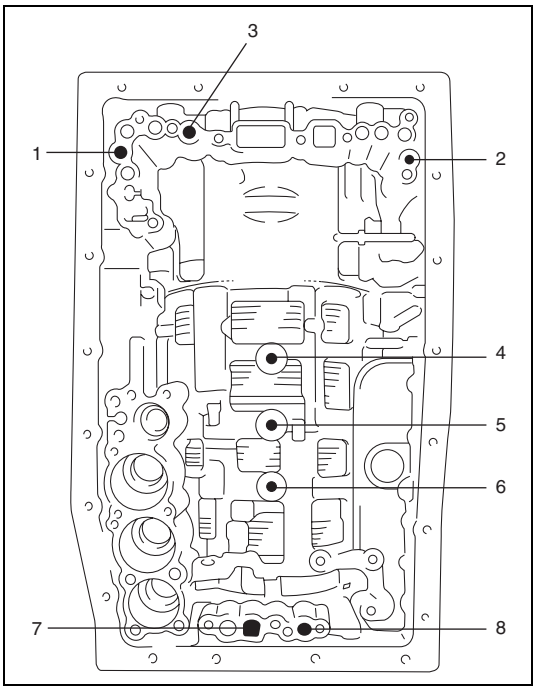

72) Apply compressed air (392 kPa, 4.0 kg/cm^2, 57 psi) into oil holes indicated in the figure. If there is no noise, disassemble and check installation condition of parts.

- When inspecting direct clutch, check reverse clutch accumulator piston hole (8) closed.

1. Direct clutch	5. No.1 brake
2. Reverse clutch	6. No.2 brake
3. Forward clutch	7. 1st & reverse (No.4) brake
4. 2nd (No.3) brake	

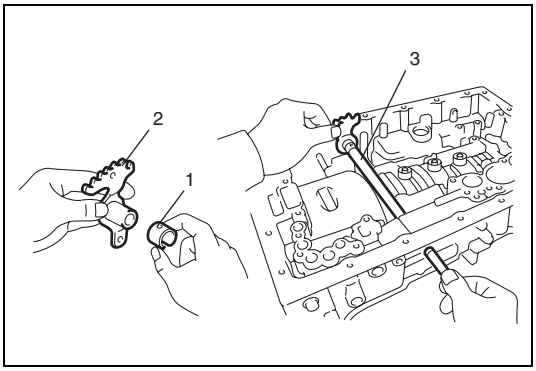

73) Install a new spacer (1) to manual shift lever (2).
74) Install manual shift shaft (3) to transmission case through manual shift lever.

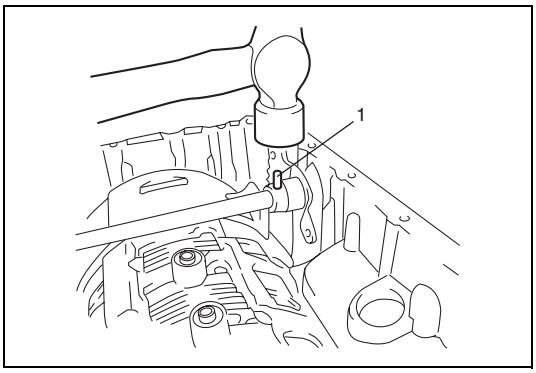

75) Drive in manual shift lever pin (1) by using hammer.

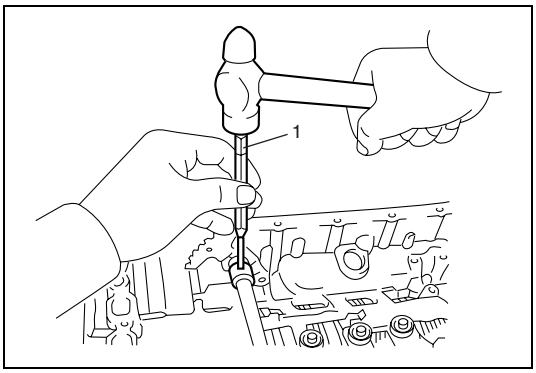

76) Align hole in sleeve cover with dent in manual shift lever and caulk securely with pin punch (1). Then check that manual shift shaft turns smoothly.

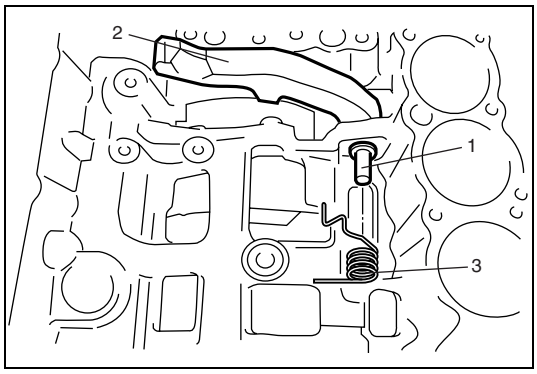

77) Install parking lock pawl (2), parking pawl pin (1) and parking pawl spring (3).

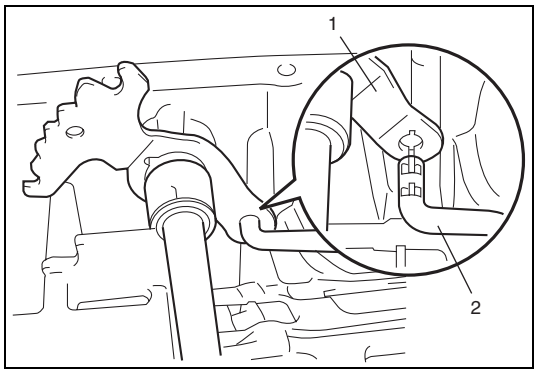

78) Connect parking lock rod (2) to manual shift lever (1) as shown in the figure.

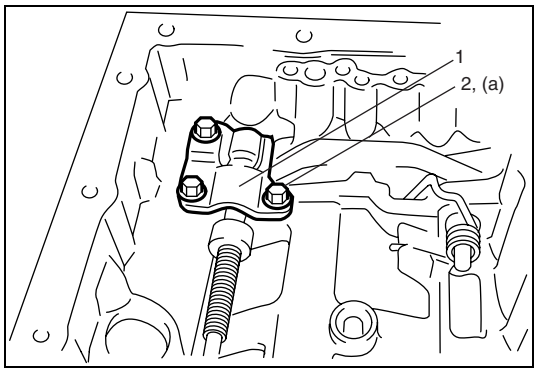

79) Install parking lock pawl bracket (1).
Tighten parking pawl bracket bolts (2) to specified torque.

Tightening torque
Parking pawl bracket bolt
(a) : 7.4 N·m (0.74 kg-m, 5.5 lb-ft)

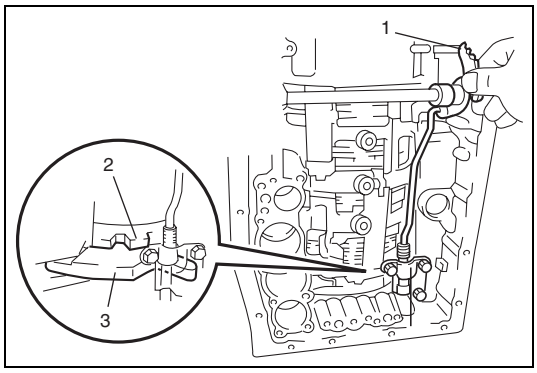

80) Turn manual shift lever (1) to “P” position, confirm that rear planetary ring gear (2) is correctly locked up by parking lock pawl (3).

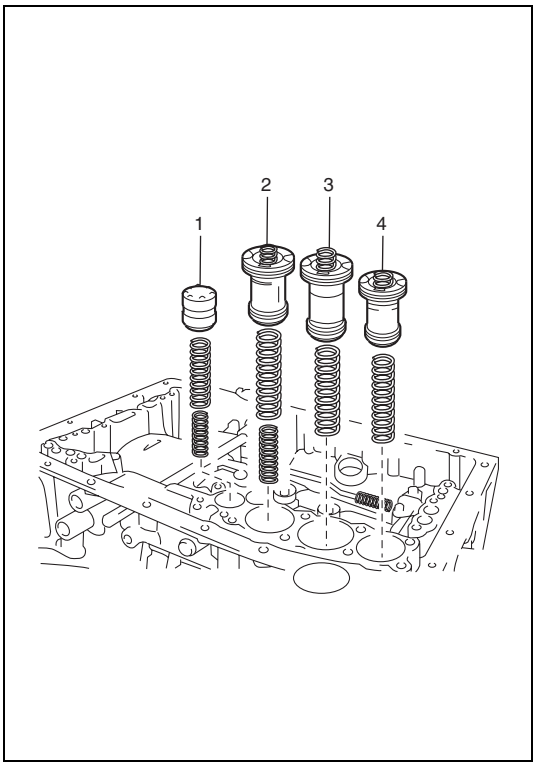

81) After applying A/T fluid to new O-rings and then install O-rings to accumulator pistons.
82) Install springs to transmission case.

Accumulator piston spring specification

Accumulator spring		Free length	Outside diameter	Identification painting
Forward clutch accumulator (1)	Inner	30.40 mm (1.197 in.)	11.40 mm (0.449 in.)	Pink
	Outer	48.76 mm (1.920 in.)	16.60 mm (0.654 in.)	Green
Reverse clutch accumulator (2)	Inner	44.0 mm (1.732 in.)	14.0 mm (0.551 in.)	Yellow
	Outer	73.35 mm (2.888 in.)	19.90 mm (0.784 in.)	Red
2nd (No.3) brake accumulator (3)		64.5 mm (2.540 in.)	19.5 mm (0.768 in.)	Orange
Direct clutch accumulator (4)		62.0 mm (2.441 in.)	15.9 mm (0.626 in.)	White

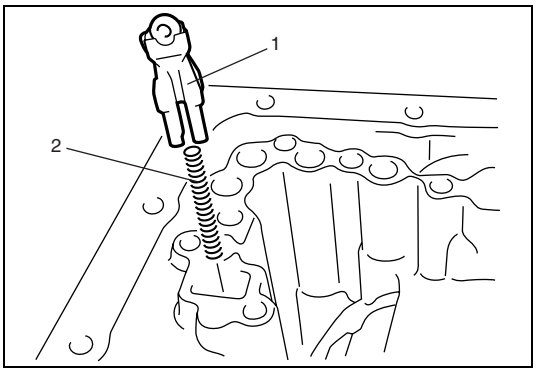

83) Install spring (2) and check ball body (1) to transmission case.

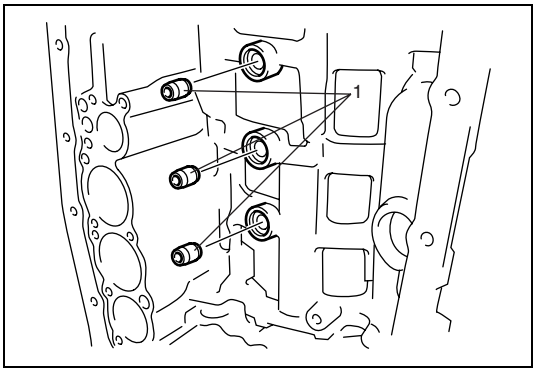

84) Install new brake drum gaskets (1).

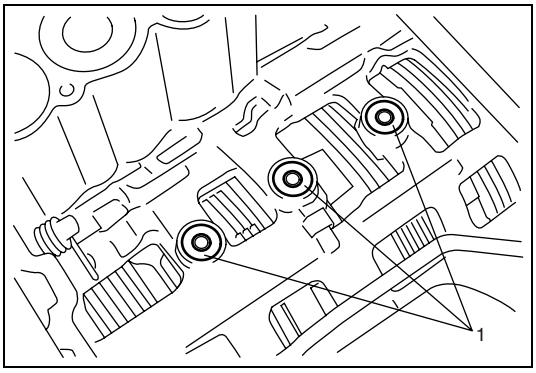

85) Install new transmission case gaskets (1).

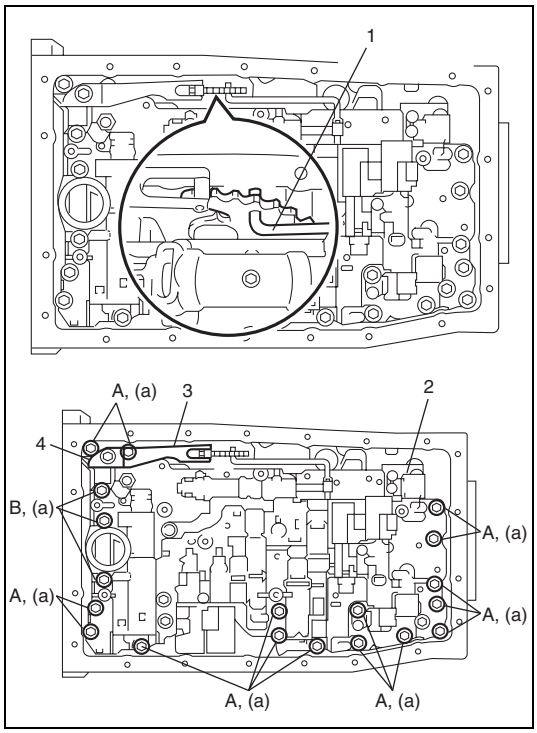

86) Align the groove of manual valve with pin of lever (1).
87) Install valve body assembly (2) by using bolts noting their length shown below.

Tightening torque
Valve body bolt
(a) : 11 N·m (1.1 kg-m, 8.0 lb-ft)

Valve body bolt length

Bolt	Length	Pieces
A	25.0 mm (0.984 in.)	16
B	36.0 mm (1.417 in.)	3

88) Install spring plate (3) and manual shift lever spring (4).

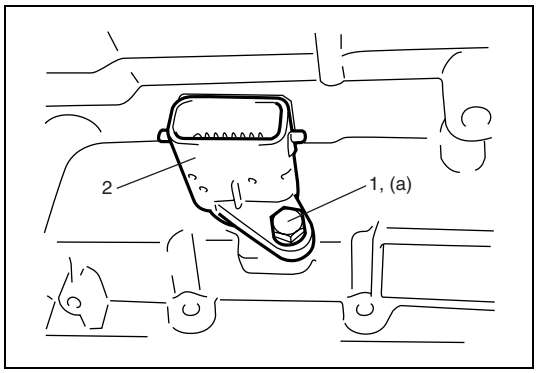

89) After applying A/T fluid to new O-ring and then install transmission wire connector (2).
Tighten transmission wire connector bolt (1) to specified torque.

Tightening torque
Transmission wire connector bolt
(a) : 5.5 N·m (0.55 kg-m, 4.0 lb-ft)

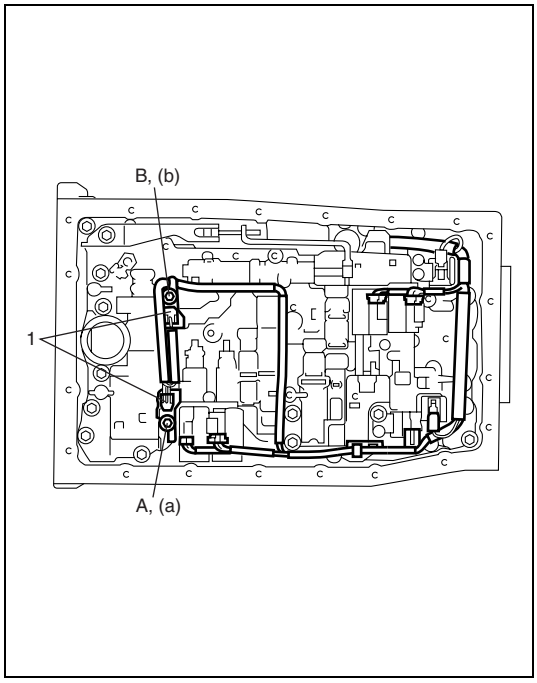

90) Install transmission fluid temperature sensors (1).
91) Install clamp and bolts to specified torque.

Tightening torque
Transmission fluid temperature sensor clamp bolt
(a) : 11 N·m (1.1 kg-m, 8.0 lb-ft)
(b) : 10 N·m (1.0 kg-m, 7.0 lb-ft)

Transmission fluid temperature sensor clamp bolt length

Bolt	Length
A	36.0 mm (1.417 in.)
B	12.0 mm (0.472 in.)

Transmission fluid temperature sensor harness color

Fluid temperature sensor	Color
Transmission fluid temperature sensor A	Orange
Transmission fluid temperature sensor B	Blue

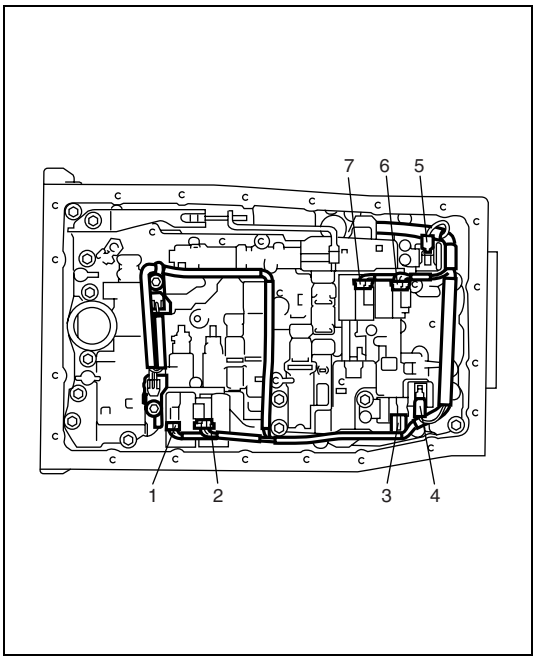

92) Connect pressure control solenoid-A connector (1), pressure control solenoid-B connector (2), shift solenoid-A connector (3), shift solenoid-B connector (4), shift solenoid-E connector (5), TCC solenoid connector (6) and pressure control solenoid-C connector (7) to each solenoid valve.

Shift solenoid valve harness color

Solenoid valve	Harness color
Pressure control solenoid-A	**Green/Gray**
Pressure control solenoid-B	**Blue/Red**
Pressure control solenoid-C	**Purple/Yellow**
Shift solenoid-A	**White**
Shift solenoid-B	**Black**
Shift solenoid-E	**Light blue**
TCC solenoid	**Light green/Brown**

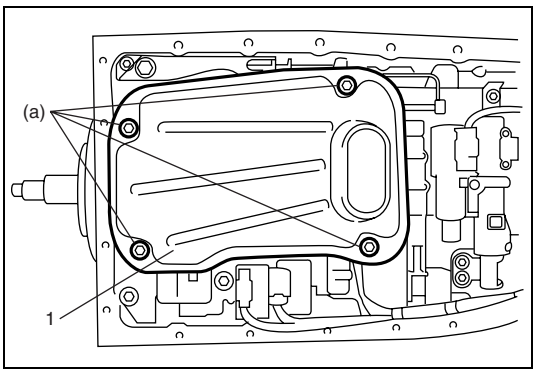

93) After applying A/T fluid to new O-ring and then install O-ring to oil strainer.
94) Install oil strainer (1) to valve body assembly.
Tighten 4 oil strainer bolts to specified torque.

Tightening torque
Oil strainer bolt
(a) : 10 N·m (1.0 kg-m, 7.0 lb-ft)

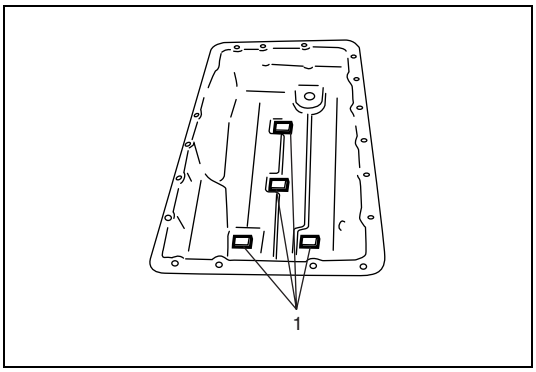

95) Install 4 transmission magnets (1).

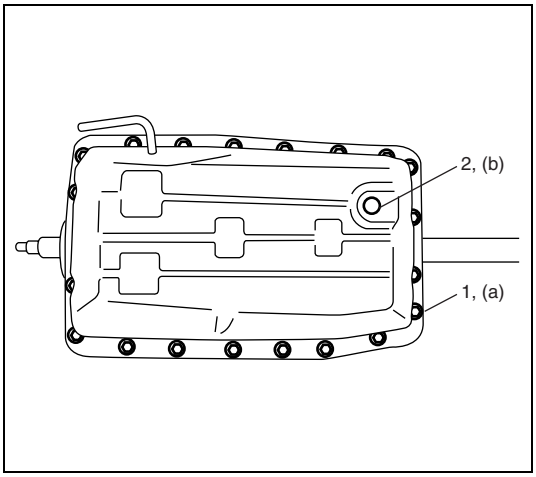

96) Install a new gasket to oil pan.
97) Install oil pan to transmission case.
Tighten 20 oil pan bolts (1) to specified torque.

Tightening torque
Oil pan bolt
(a) : 4.5 N·m (0.45 kg-m, 3.5 lb-ft)

98) Install drain plug (2).
Tighten drain plug to specified torque.

Tightening torque
Drain plug
(b) : 20 N·m (2.0 kg-m, 14.5 lb-ft)

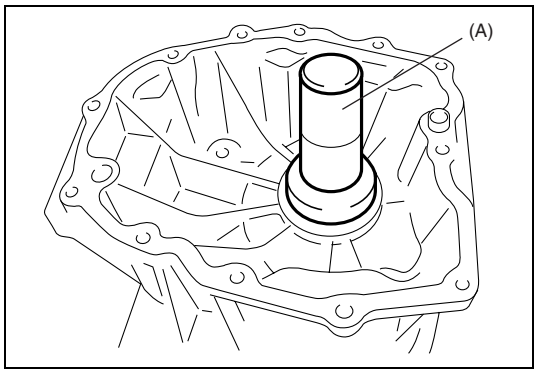

99) Install new oil seal to transmission adapter case by using special tool and hammer.

Special tool
(A) : 09913-75520

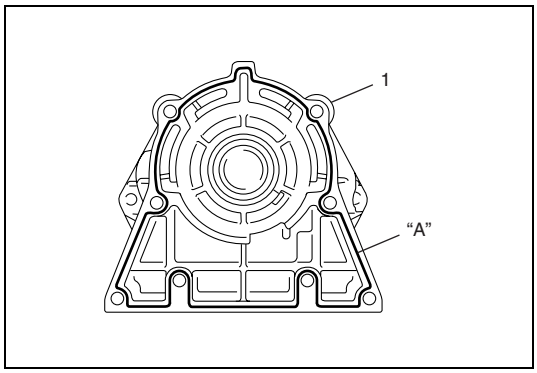

100) Apply sealant continuously to transmission case adapter sub assembly (1) mating surface as shown in figure.

Sealant
"A" Sealant : 99000-31230

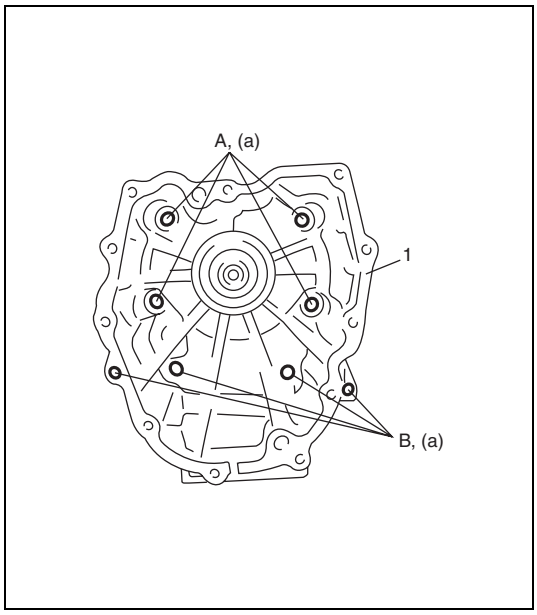

101) Install transmission case adapter sub assembly (1) to transmission case.
Tighten 8 transmission case adapter sub assembly bolts to specified torque.

NOTE:

Make sure to use new transmission case adapter sub assembly bolts.

Tightening torque
Transmission case adapter sub assembly bolt
(a) : 34 N·m (3.4 kg-m, 24.5 lb-ft)

Bolt	Length
A	50.0 mm (1.969 in.)
B	40.0 mm (1.575 in.)

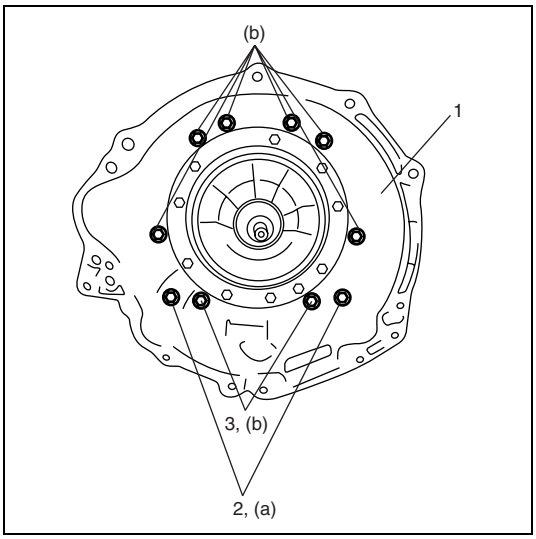

102) Clean threads of automatic transmission housing bolts and bolt holes of transmission case, install automatic transmission housing (1) to transmission case.
Tighten 10 automatic transmission housing bolts to specified torque.

NOTE:

Make sure to use new converter housing bolts (2) and (3).

Tightening torque
Automatic transmission housing bolt
(a) : 57 N·m (5.8 kg-m, 41.5 lb-ft)
(b) : 34 N·m (3.4 kg-m, 24.5 lb-ft)

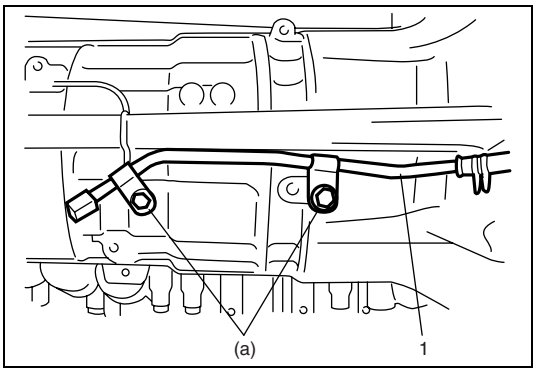

103) After applying A/T fluid to new O-ring and then install automatic transmission breather pipe (1).
104) Install automatic transmission breather hose.
Tightening 2 automatic transmission breather pipe bolts to specified torque.

Tightening torque
Automatic transmission breather pipe bolt
(a) : 5.5 N·m (0.55 kg-m, 4.0 lb-ft)

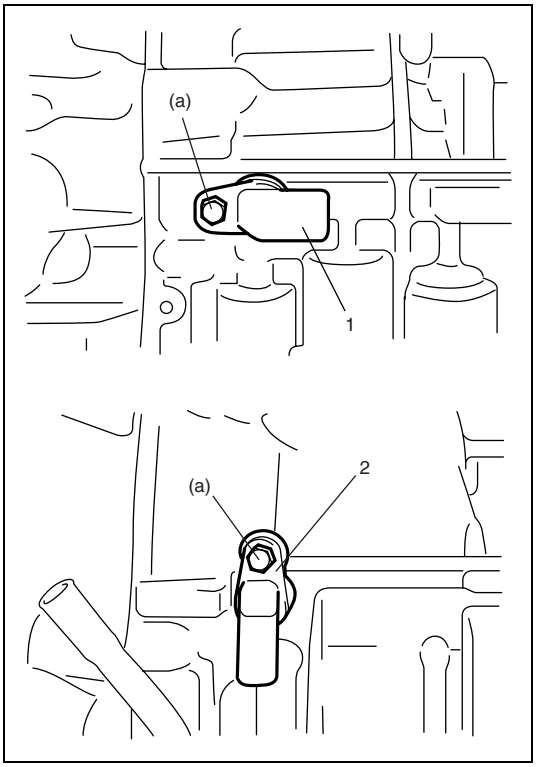

105) After applying A/T fluid to new O-rings and then install them to output shaft speed sensor (1) and input shaft speed sensor (2).
106) Install output shaft speed sensor (1) and input shaft speed sensor (2).
Tighten transmission speed sensor bolts to specified torque.

Tightening torque
Transmission speed sensor bolt
(a) : 5.5 N·m (0.55 kg-m, 4.0 lb-ft)

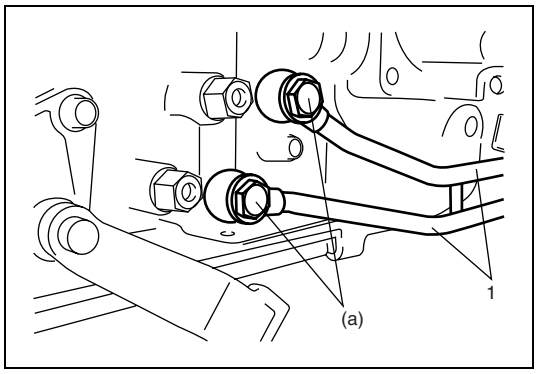

107) Apply A/T fluid to new 4 union gaskets and then install oil cooler pipes (1).
Tighten 2 oil cooler pipe union bolts to specified torque.

Tightening torque
Oil cooler pipe union bolt
(a) : 25 N·m (2.5 kg-m, 18.0 lb-ft)

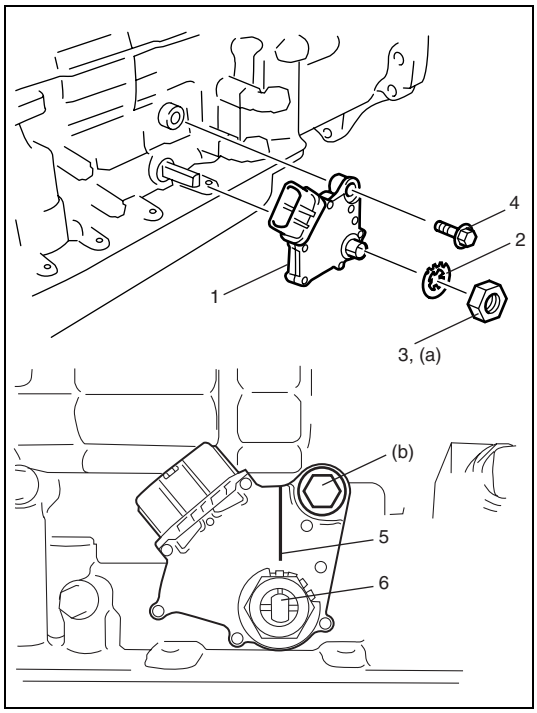

108) Install transmission range sensor (1) and tighten transmission range sensor bolt (4) temporarily.
109) Install grommet, lock washer (2) and nut (3).
Tighten nut to specified torque. After tightening it, bend claws of lock washer.

Tightening torque
Manual shift shaft nut
(a) : 7 N·m (0.7 kg-m, 5.0 lb-ft)

110) After turning manual lever shaft fully counterclockwise, turn it clockwise by 2 notches and set it to “N” range.
111) With neutral reference line (5) and groove (6) in transmission range sensor aligned.
Tighten transmission range sensor bolt (4) to specified torque.

Tightening torque
Transmission range sensor bolt
(b) : 13 N·m (1.3 kg-m, 9.5 lb-ft)

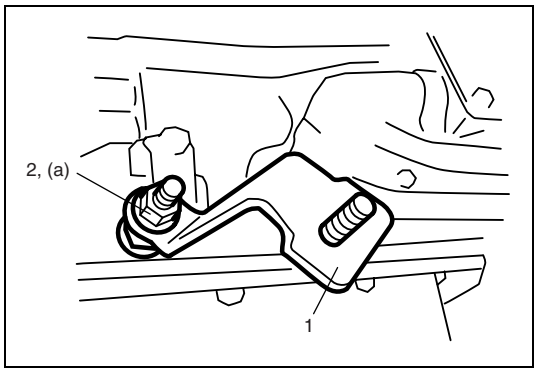

112) Install manual select lever (1).
Tighten manual select lever nut (2) to specified torque.

Tightening torque
Manual select lever nut
(a) : 13 N·m (1.3 kg-m, 9.5 lb-ft)

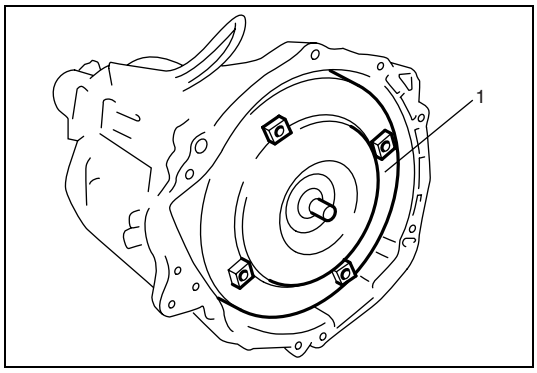

113) Install torque converter (1) to input shaft.

CAUTION:
Install torque converter, using care not to damage oil seal lip of oil pump.

Inspection

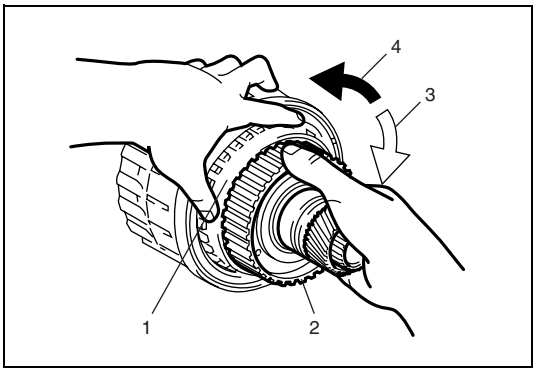

- Hold reverse clutch hub (1), and turn one-way No.2 clutch assembly (2).
  Check that one-way No.2 clutch assembly (2) can be turned freely (3) clockwise and locked (4) counterclockwise.

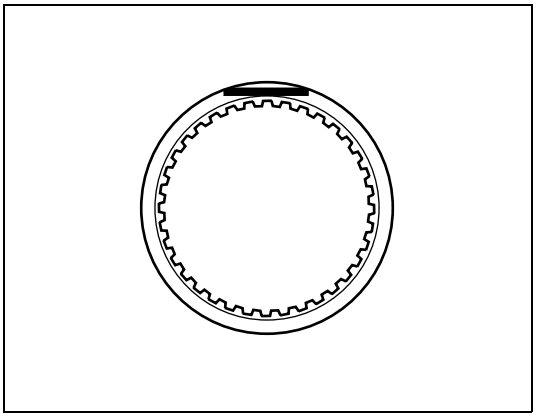

- Check that sliding surfaces of discs, plate and flange are not worn or burnt. If necessary replace them.

NOTE:

- **If disc lining is exfoliated, discolored or worn hardly, replace all discs.**
- **If only a part of printed numbers is corroded, replace all discs.**
- **Before assembling new discs, soak them in A/T fluid for at least 15 minutes.**

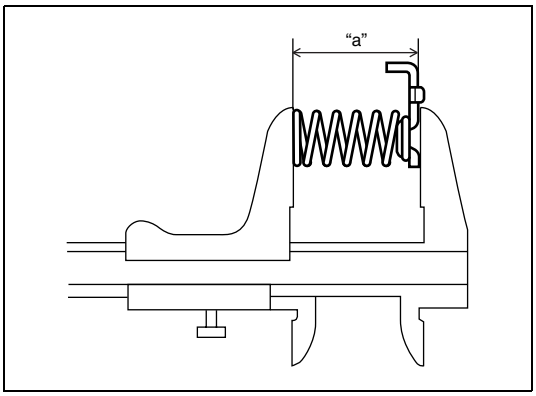

- Measure free length of 2nd (No.3) brake piston return spring including spring seat.

2nd (No.3) brake piston return spring free length
"a" : 15.72 mm (0.619 in.)

NOTE:

- **Do not apply excessive force when measuring spring free length.**
- **Perform measurement at several points.**

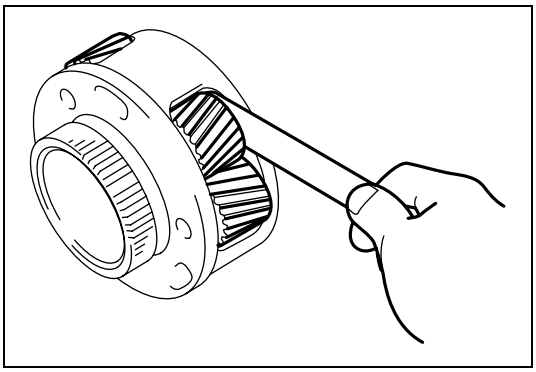

- Measure planetary pinion gear thrust clearance by using thickness gauge.
  If clearance exceeds limit, replace front planetary gear assembly.

Front planetary pinion gear thrust clearance
Standard : 0.20 – 0.60 mm (0.008 – 0.024 in.)
Limit : 0.65 mm (0.026 in.)

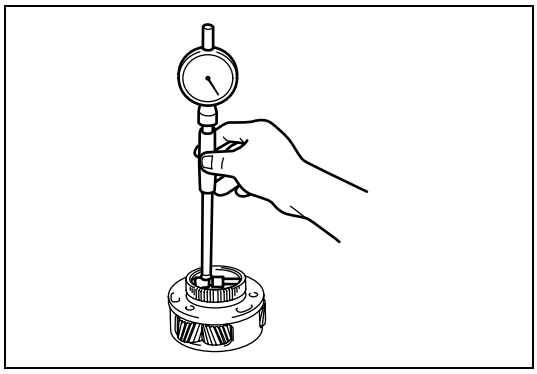

- Measure inside diameter of front planetary gear assembly bushing.
  If inside diameter exceeds limit, replace front planetary gear assembly.

Front planetary gear assembly bushing inside diameter limit :
57.48 mm (2.263 in.)

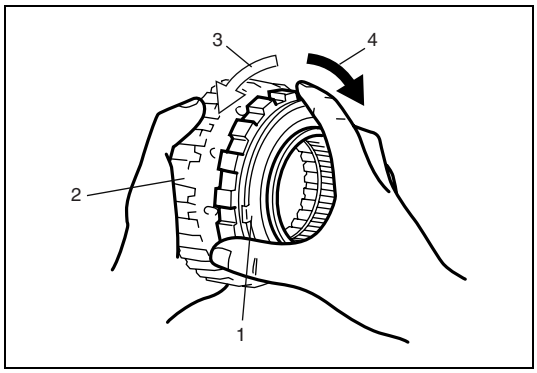

- Install one-way No.1 clutch assembly (1) to one-way No.1 clutch inner race (2).
  Hold one-way No.1 clutch inner race (2), and turn one-way No.1 clutch assembly (1).
  Check that one-way No.1 clutch assembly (1) can be turned freely (3) counterclockwise and locked (4) clockwise.
  Remove one-way No.1 clutch assembly (1) from one-way No.1 clutch inner race (2).

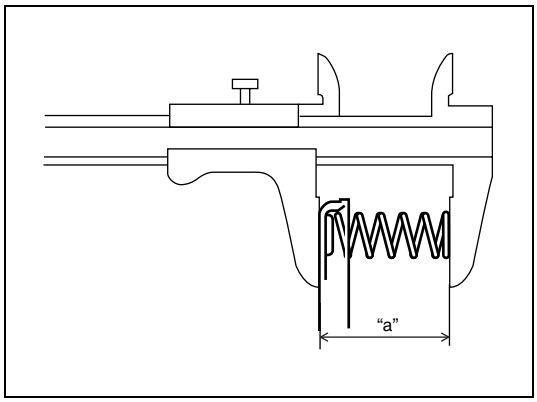

- Measure free length of No.1 brake piston return spring including spring seat.

No.1 brake piston return spring free length
"a" : 17.05 mm (0.671 in.)

NOTE:

- **Do not apply excessive force when measuring spring free length.**
- **Perform measurement at several points.**

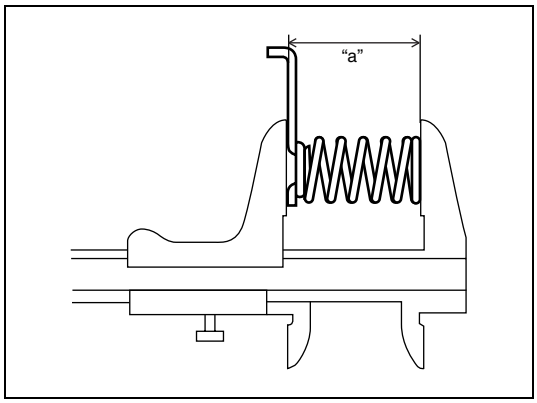

- Measure free length of No.2 brake piston return spring including spring seat.

No.2 brake piston return spring free length
"a" : 17.45 mm (0.687 in.)

NOTE:

- **Do not apply excessive force when measuring spring free length.**
- **Perform measurement at several points.**

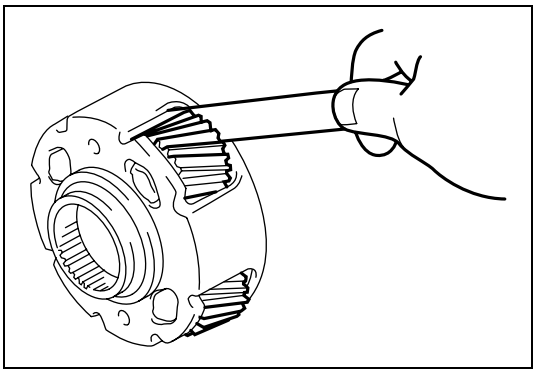

- Measure planetary pinion gear thrust clearance by using thickness gauge.
  If clearance exceeds limit, replace middle planetary gear assembly.

Middle planetary pinion gear thrust clearance
Standard : 0.12 – 0.68 mm (0.005 – 0.027 in.)
Limit : 0.73 mm (0.029 in.)

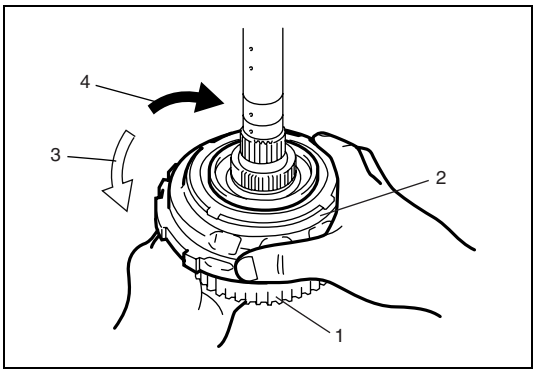

- Hold rear planetary ring gear flange sub assembly (1) and turn one-way No.3 clutch assembly (2). Check that one-way No.3 clutch assembly (2) can be turned freely (3) counter-clockwise and locked (4) clockwise.

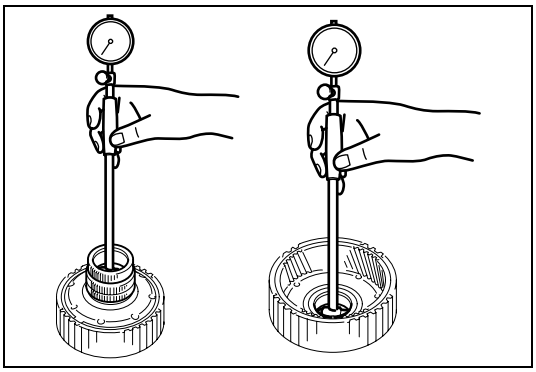

- Measure inside diameter of planetary ring gear assembly bushing.
  If inside diameter exceeds limit, replace planetary ring gear.

Planetary ring gear bushing inside diameter limit :
32.19 mm (1.267 in.)

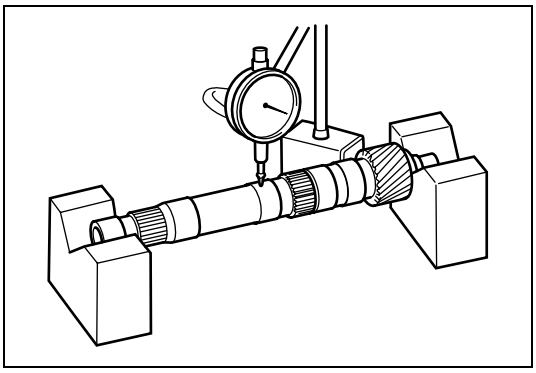

- Set intermediate shaft between two “V” blocks, and measure its runout by using a dial gauge.
  If runout exceeds limit, replace intermediate shaft with new one.

Intermediate shaft runout limit :
0.08 mm (0.003 in.)

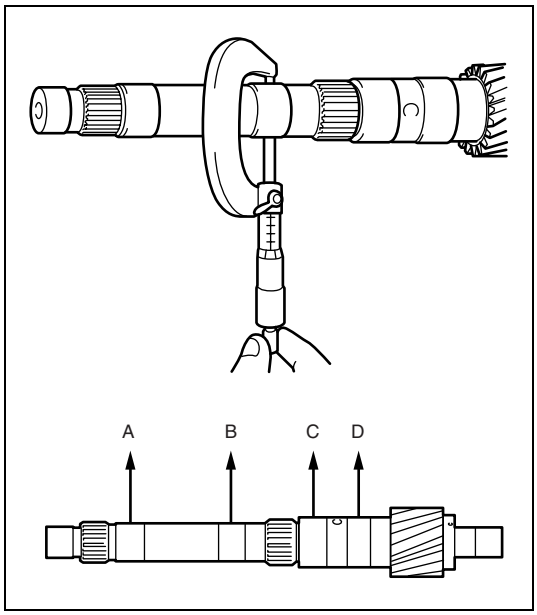

- Measure outside diameter of intermediate shaft positions shown in figure.
  If outside diameter is below limit, replace intermediate shaft with new one.

Outside diameter of intermediate shaft

	Standard	Limit
A	**25.962 – 25.975 mm (1.022 – 1.023 in.)**	**25.912 mm (1.020 in.)**
B	**25.962 – 25.975 mm (1.022 – 1.023 in.)**	**25.912 mm (1.020 in.)**
C	**32.062 – 32.075 mm (1.262 – 1.263 in.)**	**32.012 mm (1.260 in.)**
D	**32.062 – 32.075 mm (1.262 – 1.263 in.)**	**32.012 mm (1.260 in.)**

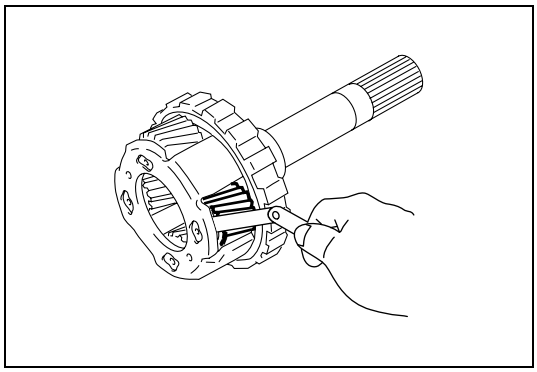

- Measure planetary pinion gear thrust clearance by using thickness gauge.
  If clearance exceeds limit, replace rear planetary gear assembly.

Rear planetary pinion gear thrust clearance
Standard : 0.2 – 0.6 mm (0.008 – 0.024 in.)
Limit : 0.65 mm (0.026 in.)

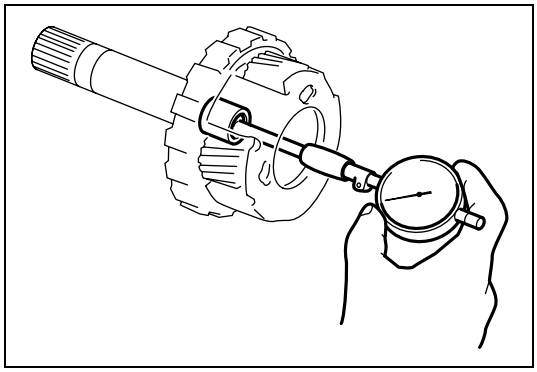

- Measure inside diameter of rear planetary gear assembly bushing.
  If inside diameter exceeds limit, replace rear planetary gear assembly.

Rear planetary gear inside diameter limit :
20.075 mm (0.790 in.)

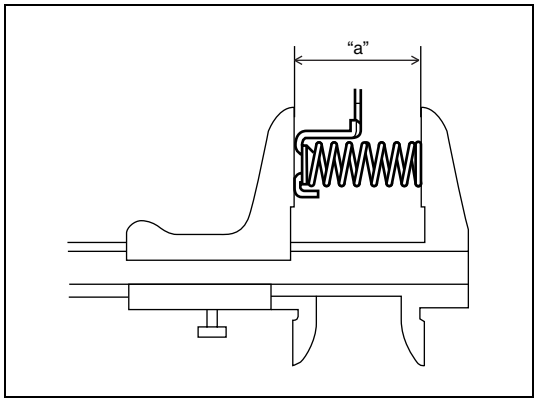

- Measure free length of 1st & reverse (No.4) brake return spring including spring seat.

1st & reverse (No.4) brake return spring free length
"a" : 23.74 mm (0.935 in.)

NOTE:

- **Do not apply excessive force when measuring spring free length.**
- **Perform measurement at several points.**

Bearing and Race Installation Diagram

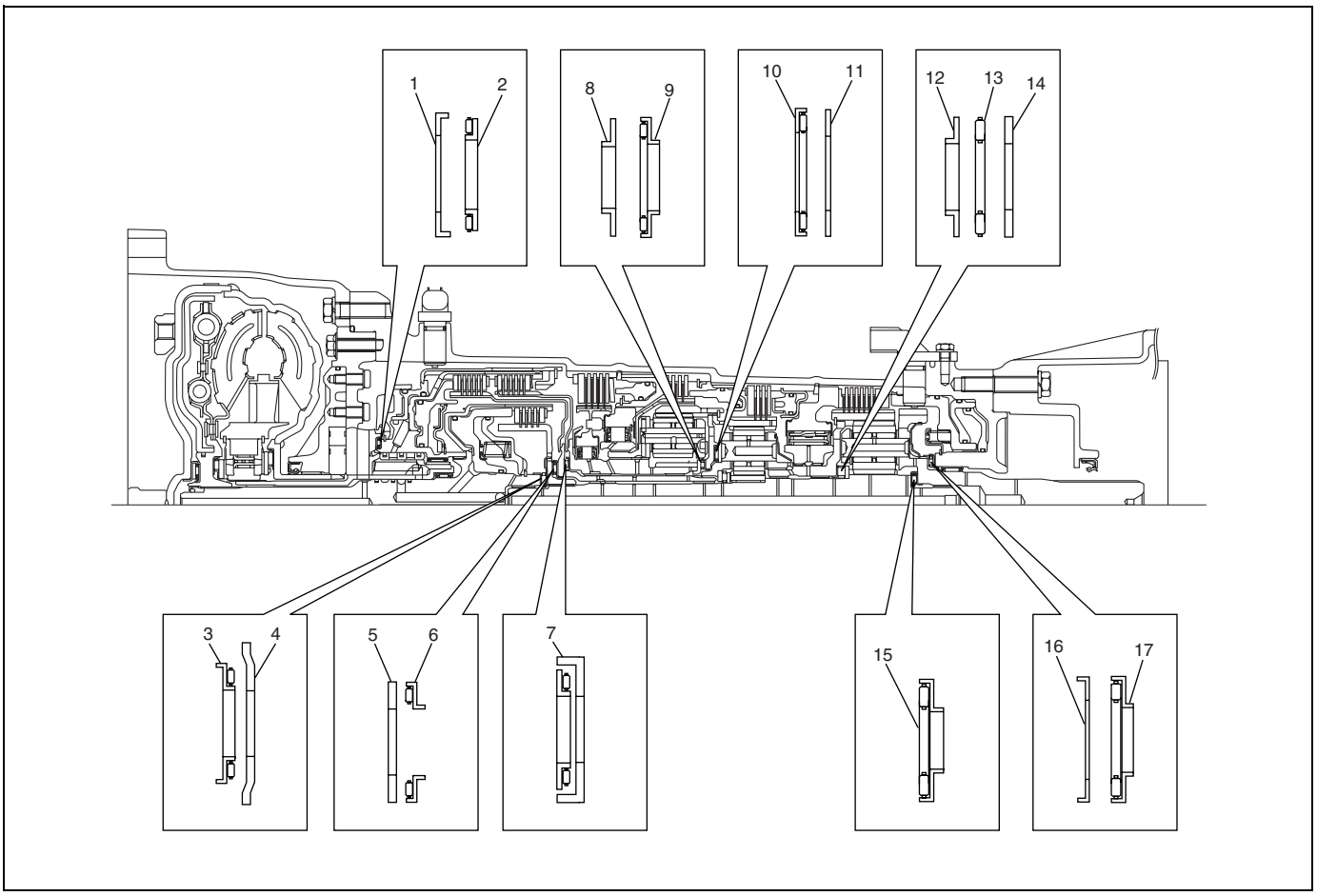

Bearing and race dimension

No.	Bearing and race	Inside diameter	Outside diameter
1	Thrust bearing race No.1	74.2 mm (2.921 in.)	87.74 mm (3.454 in.)
2	Thrust needle roller bearing	71.9 mm (2.831 in.)	85.6 mm (3.370 in.)
3	Thrust needle roller bearing	21.3 mm (0.839 in.)	41.1 mm (1.618 in.)
4	Thrust bearing race	22.6 mm (0.890 in.)	60.0 mm (2.362 in.)
5	Thrust bearing race No.2	38.4 mm (1.512 in.)	63.0 mm (2.480 in.)
6	Thrust needle roller bearing	42.5 mm (1.673 in.)	61.2 mm (2.409 in.)
7	Thrust needle roller bearing	33.3 mm (1.311 in.)	56.6 mm (2.228 in.)
8	Thrust bearing race No.3	38.0 mm (1.496 in.)	57.0 mm (2.244 in.)
9	Thrust needle roller bearing	43.4 mm (1.709 in.)	58.3 mm (2.295 in.)
10	Thrust needle roller bearing	55.7 mm (2.193 in.)	76.4 mm (3.008 in.)
11	Thrust bearing race No.4	53.7 mm (2.114 in.)	74.0 mm (2.913 in.)
12	Thrust bearing race No.7	33.4 mm (1.315 in.)	49.0 mm (1.929 in.)
13	Thrust needle roller bearing	32.1 mm (1.264 in.)	49.35 mm (1.943 in.)
14	Thrust bearing race No.8	32.1 mm (1.264 in.)	49.0 mm (1.929 in.)
15	Thrust needle roller bearing	21.5 mm (0.847 in.)	40.8 mm (1.606 in.)
16	Thrust bearing race No.9	48.5 mm (1.909 in.)	62.7 mm (2.469 in.)
17	Thrust needle roller bearing	45.9 mm (1.807 in.)	64.0 mm (2.520 in.)

Tightening Torque Specifications

Fastening part	Tightening torque		
	N•m	kg-m	lb-ft
A/T fluid drain plug	20	2.0	14.5
Manual selector assembly mounting bolt	18	1.8	13.5
Manual select cable end nut	19	1.9	14.0
Manual shift shaft nut	7	0.7	5.0
Transmission range sensor bolt	13	1.3	9.5
Manual select lever nut	13	1.3	9.5
Input shaft speed sensor bolt	5.5	0.55	4.0
Output shaft speed sensor bolt	5.5	0.55	4.0
Oil cooler pipe union bolt	25	2.5	18.0
Stiffener mount bolt	55	5.5	38.5
Torque converter mounting bolt	65	6.5	45.5
Transmission to engine bolt and nut	80	8.0	56.0
Drive plate bolt	69	6.9	48.3
Engine rear mounting bolt	55	5.5	38.5
Engine rear mounting member bolt	55	5.5	38.5
Exhaust No.1 pipe to exhaust No.2 pipe nut	50	5.0	35.0
Exhaust muffler pipe to exhaust No.2 pipe nut	60	6.0	42.0
Front propeller shaft universal joint flange bolt	50	5.0	35.0
Rear propeller shaft universal joint flange bolt	60	6.0	42.0
Stabilizer bar mount bush bracket bolt	23	2.3	16.1
Oil pump body bolt	11	1.1	8.0
Oil pump bolt	21	2.1	15.0
Parking pawl bracket bolt	7.4	0.74	5.5
Valve body bolt	11	1.1	8.0
Transmission wire connector bolt	5.5	0.55	4.0
Transmission fluid temperature sensor clamp bolt (a)	11	1.1	8.0
Transmission fluid temperature sensor clamp bolt (b)	10	1.0	7.0
Oil strainer bolt	10	1.0	7.0
Oil pan bolt	4.5	0.45	3.5
Extension housing bolt	34	3.4	24.5
Transmission case adapter sub assembly bolt	34	3.4	24.5
Automatic transmission housing bolt (a)	57	5.8	41.5
Automatic transmission housing bolt (b)	34	3.4	24.5
Automatic transmission breather pipe bolt	5.5	0.55	4.0

Required Service Material

Material	Recommended SUZUKI product (Part Number)	Use
A/T fluid	Refer to Section 0B	• Automatic transmission • Parts lubrication when installing • Solenoid valve O-ring • A/T fluid temperature sensor O-ring
Sealant	SUZUKI BOND NO.1216B (99000-31230)	• Mating surface of adapter case • Mating surface of extension housing • Oil pump bolt

Special Tool

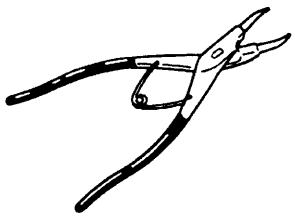 09900-06108 Snap ring pliers (closing type)	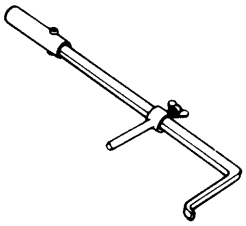 09913-50121 Oil seal remover	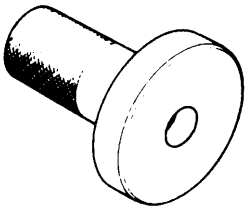 09913-75520 Bearing installer	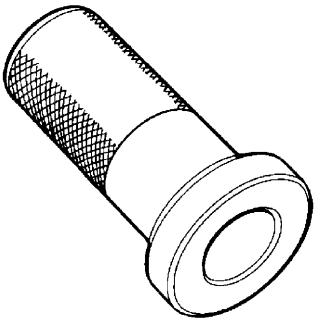 09913-75810 Bearing installer
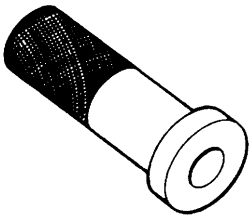 09913-85210 Bearing installer	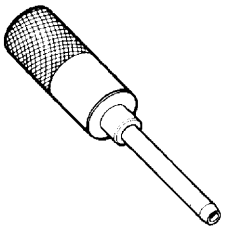 09916-57330 Valve guide installer handle	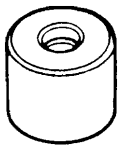 09917-98221 Valve guide stem attachment	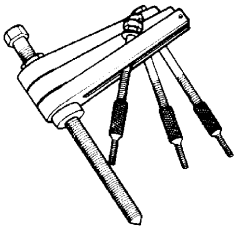 09920-13120 Crankcase separator
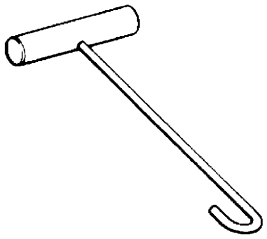 09920-20310 Clutch spring hook	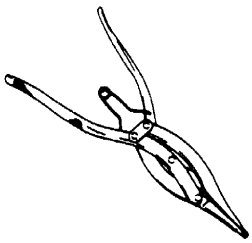 09920-76010 Snap ring opener	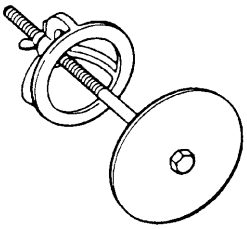 09922-86010 Clutch piston compressor	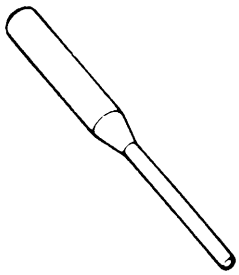 09922-89810 Shifter lock pin remover (3.5 mm)

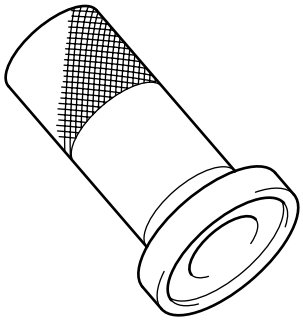 09925-15410 Oil seal installer	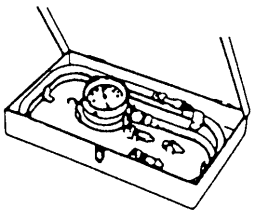 09925-37811-001 Oil pressure gauge	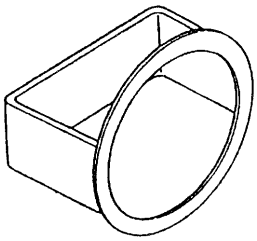 09926-96040 Clutch spring compressor No.8	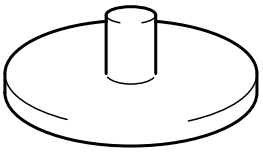 09926-96050 Brake piston compressor
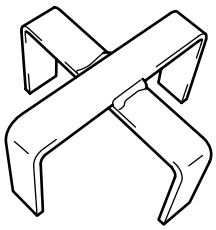 09926-96520 Spring compressor	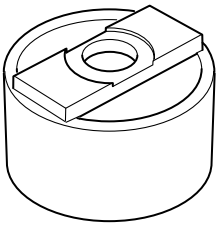 09927-66510 Spring compressor	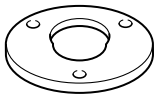 09927-66520 Oil pump remover	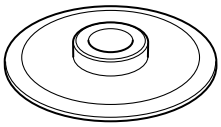 09927-66530 Spring compressor
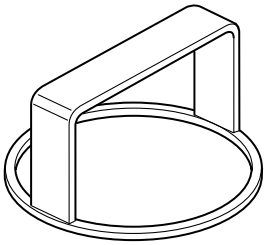 09927-66540 Spring compressor	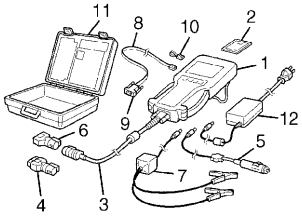 SUZUKI scan tool –		

NOTE:

This kit includes the following items and substitutes for the Tech 1 kit.
1. Tech 2, 2. PCMCIA card, 3. DLC cable, 4. SAE16/19 adapter, 5. Cigarette cable, 6. DLC loopback adapter, 7. Battery power cable, 8. RS232 cable, 9. RS232 adapter, 10. RS232 loopback connector, 11. Storage case, 12. Power supply

SECTION 7D

TRANSFER (4WD)

CONTENTS

General Description

Identification of Transfer Type

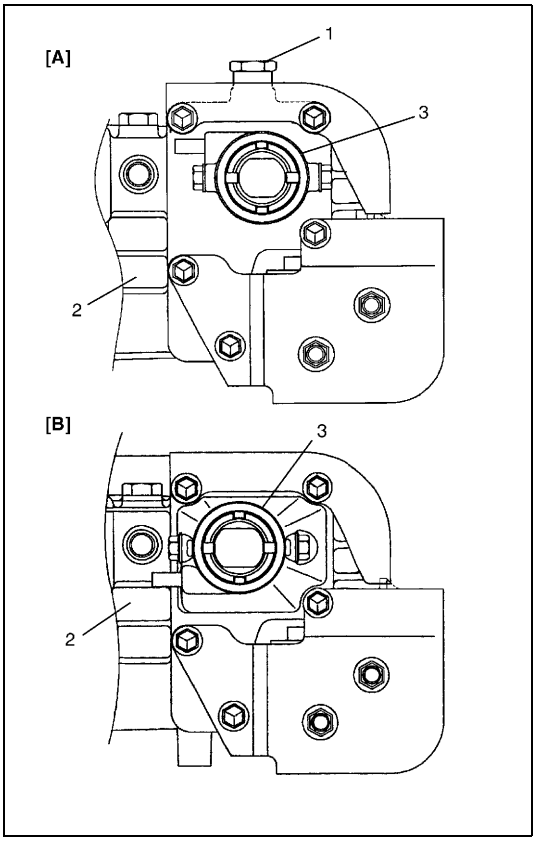

Check shape of transfer rear case, and identify transfer as type A or type B.

[A]:	Fig. for transfer type A
[B]:	Fig. for transfer type B
1.	Select return spring bolt
2.	Rear case
3.	Gear shft lever case

Components

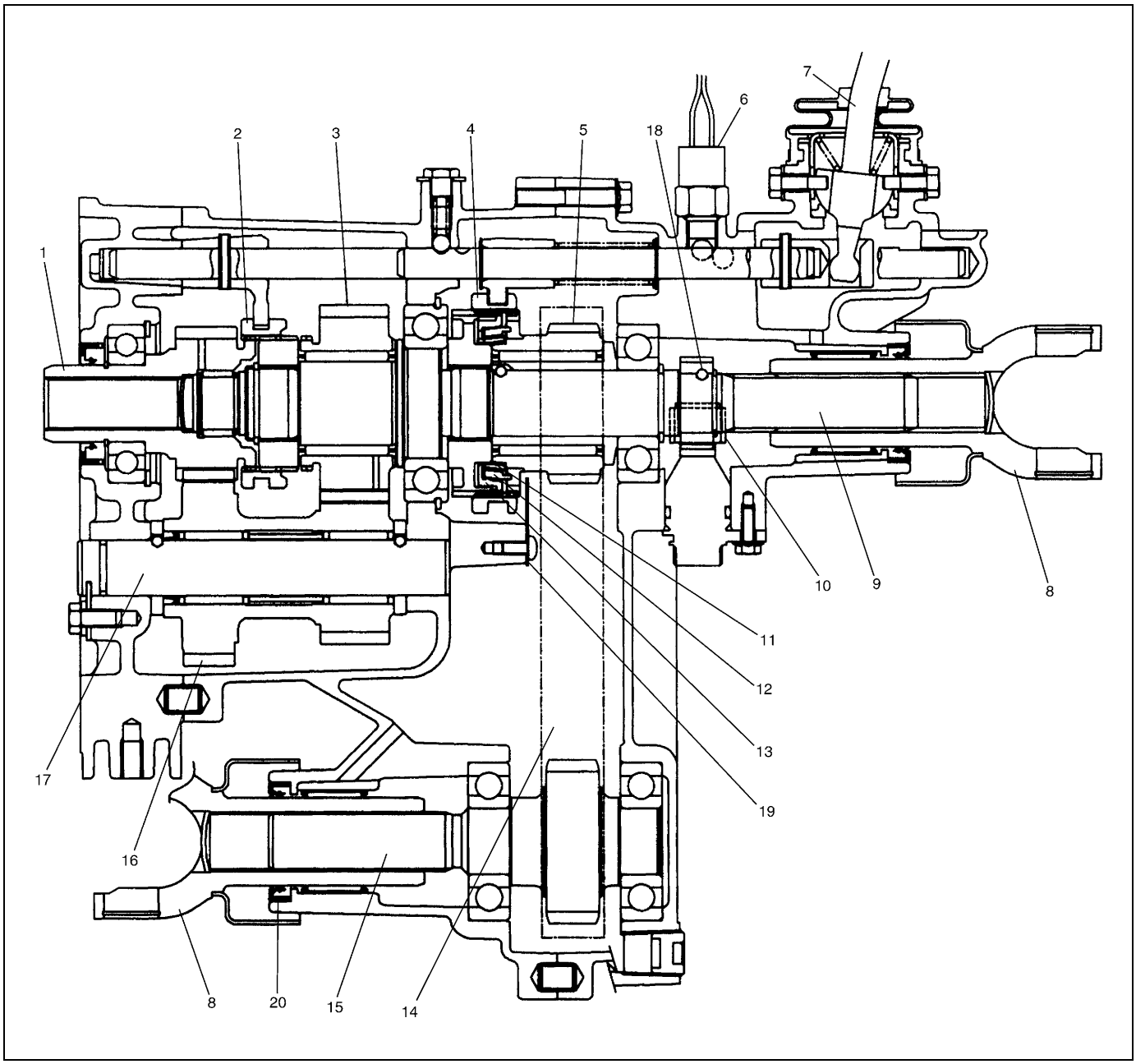

1. Transfer input gear	6. 4WD switch	11. Synchronizer inner ring	16. Transfer counter gear
2. Reduction shift sleeve	7. Transfer gear shift control lever	12. Center cone	17. Transfer counter shaft
3. Output low gear	8. Sliding yoke	13. Synchronizer outer ring	18. Ball
4. Front drive clutch sleeve	9. Output rear shaft	14. Drive chain	19. Synchronizer plate
5. Drive sprocket	10 Speedometer driven gear	15. Output front shaft	20. Transfer center case oil seal

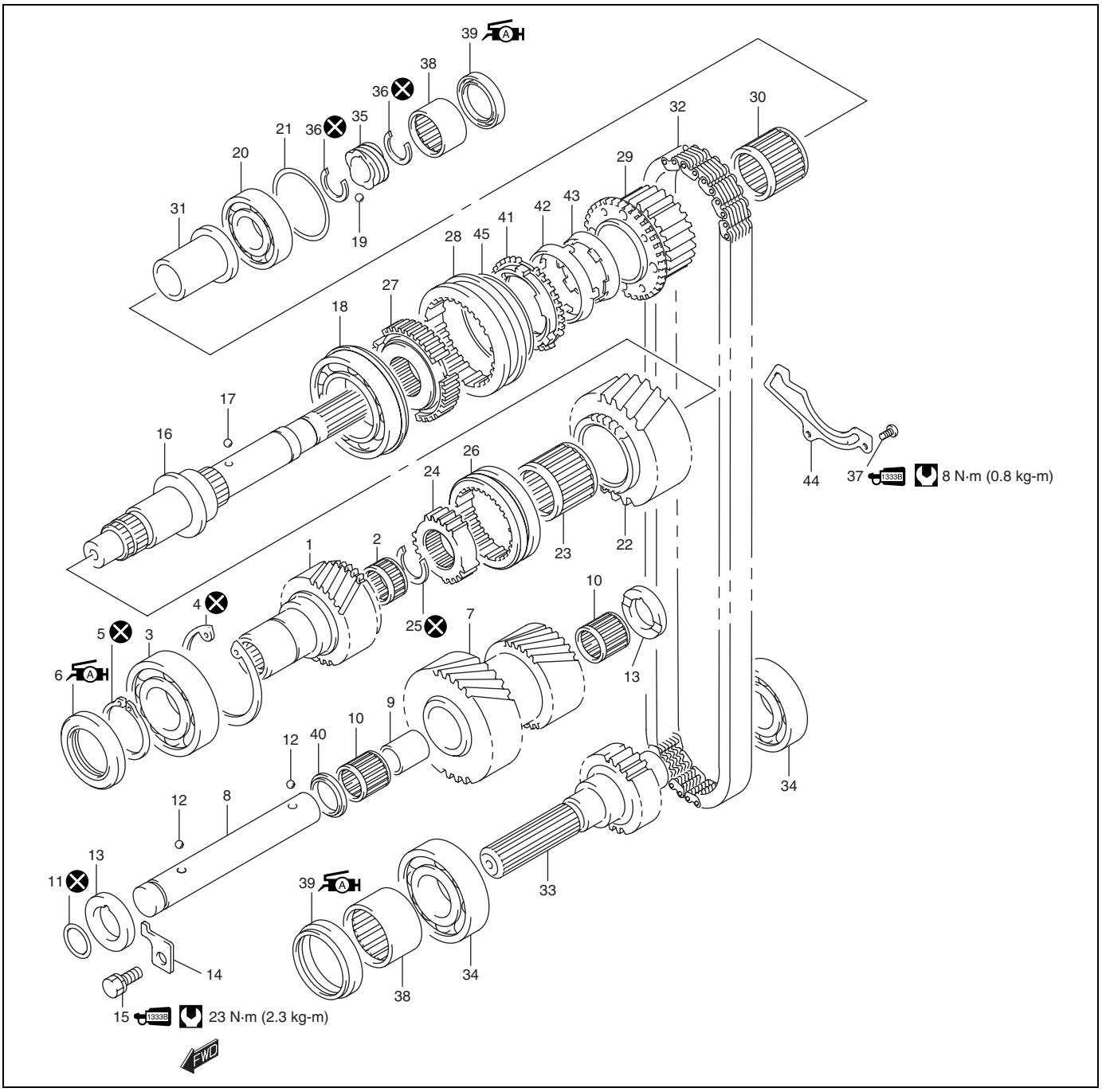

1. Input gear	13. Washer	25. Circlip	37. Synchronizer plate screw : Apply thread lock 99000-32020 to all around thread part of screw.
2. Needle bearing	14. Counter shaft plate	26. Reduction shift sleeve	38. Needle bearing
3. Input gear bearing	15. Counter shaft plate bolt : Apply thread lock 99000-32020 to all around thread part of bolt.	27. Front drive clutch hub	39. Oil seal : Apply grease 99000-25010 to oil seal lip.
4. Input bearing circlip	16. Output rear shaft	28. Front drive clutch sleeve	40. Friction ring
5. Input gear circlip	17. Sprocket bush ball (For transfer type A)	29. Drive sprocket	41. Synchronizer outer ring
6. Oil seal : Apply grease 99000-25010 to oil seal lip.	18. Rear shaft No. 1 bearing	30. Needle bearing	42. Center cone
7. Counter gear	19. Speedometer drive gear ball	31. Sprocket bush	43. Synchronizer inner ring
8. Counter shaft	20. Rear shaft No. 2 bearing	32. Drive chain	44. Synchronizer plate
9. Spacer	21. Adjusting shim	33. Output front shaft	45. Synchronizer spring
10. Needle bearing	22. Output low gear	34. Bearing	: Tightening torque
11. O-ring	23. Needle bearing	35. Speedometer drive gear	: Do not reuse
12. Washer ball	24. Reduction clutch hub	36. Circlip	

Unit Repair

Disassembly

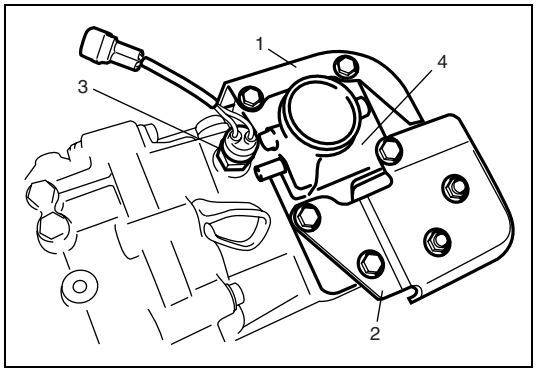

1) Remove 4WD switch (3) and take out steel ball.
2) Remove transfer rear cover (1) (if equipped), transfer damper bracket (2) (if equipped) and gear shift lever case (4).

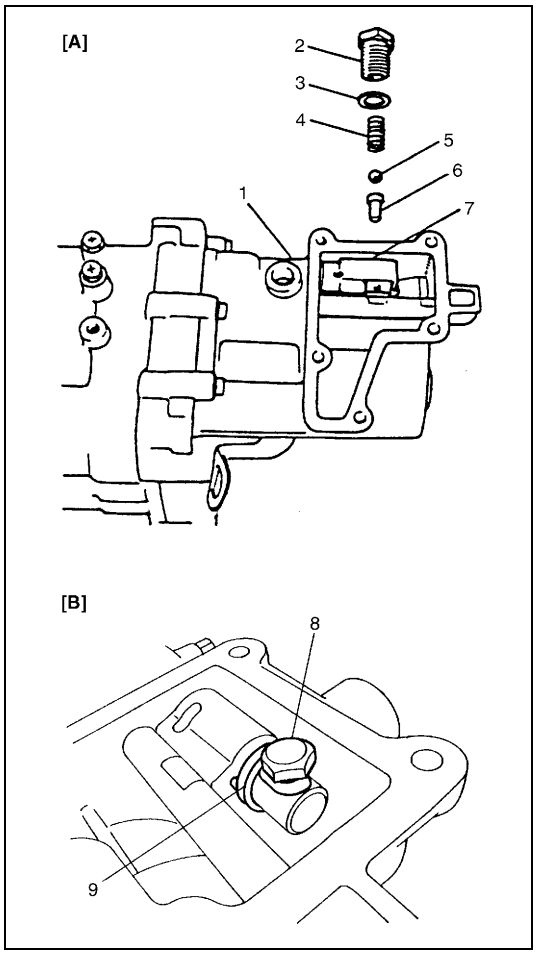

3) For transfer type A
   After removing bolt of select return system, take out spring (4), steel ball (5) and pin (6).
   For transfer type B
   Remove select return spring bolt (8) and then return spring (9).

[A]:	For transfer type A
[B]:	For transfer type B
1.	Rear case
2.	Select return spring bolt
3.	Washer (aluminum)
7.	Reduction shift yoke

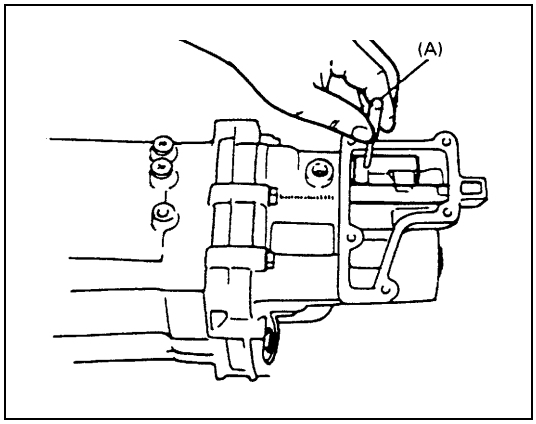

4) By hammering special tool, drive out spring pin from reduction shift yoke.

NOTE:

- **Pin may drop into case when driven out. Therefore, take it out when case is disassembled.**
- **After spring pin is removed, yoke may be either taken out.**

Special tool
(A): 09922-85811

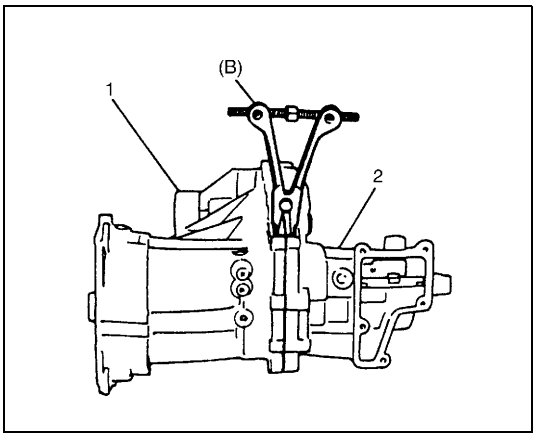

5) Remove 15 rear case bolts and then separate center case (1) and rear case (2) by using special tool.

NOTE:

To separate center case (1) and rear case (2), use special tool at 4 points in turn and make opening wider evenly.

Special tool
(B): 09912-34510

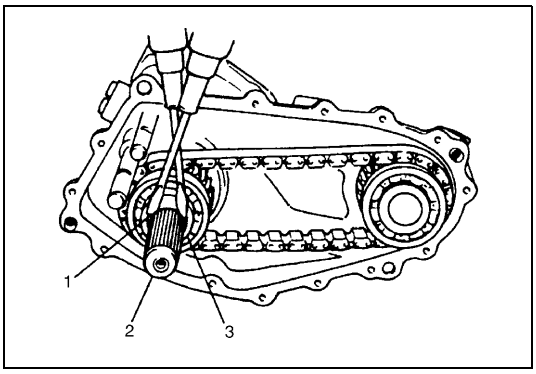

6) Remove circlip (1) from output rear shaft (2) by using screwdrivers and hammer, then pull out speedometer drive gear (3) and steel ball.

NOTE:

Watch out for steel ball which comes off from shaft when speedometer drive gear is pulled out, so as not to lose it.

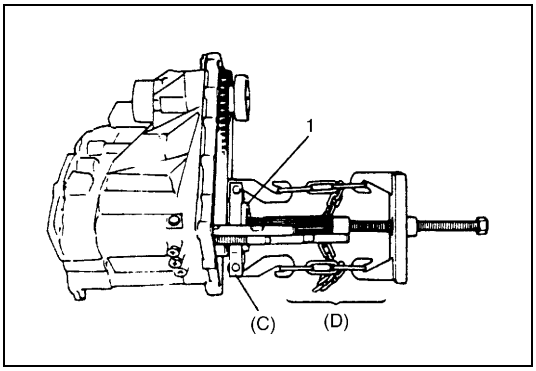

7) Remove circlip for bearing and pull out output rear shaft No. 2 bearing (1) by combination of special tools.

Special tool
(C): 09921-57810
(D): 09927-18411

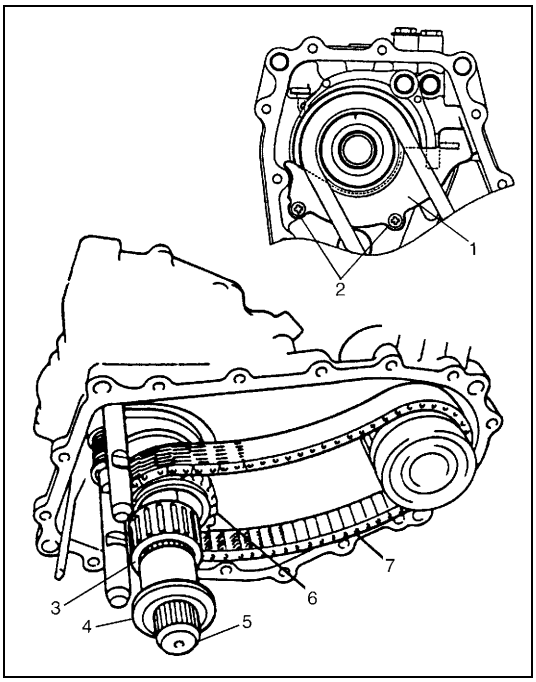

8) Remove synchronizer plate (1) screws (2) and pull out sprocket bush (4) and needle bearing (3) from output rear shaft (5).
9) Remove drive sprocket (6) with drive chain (7) and synchronizer plate (1).

NOTE:

Watch out for steel ball which comes off from shaft when bush is pulled out so as not to lose it.

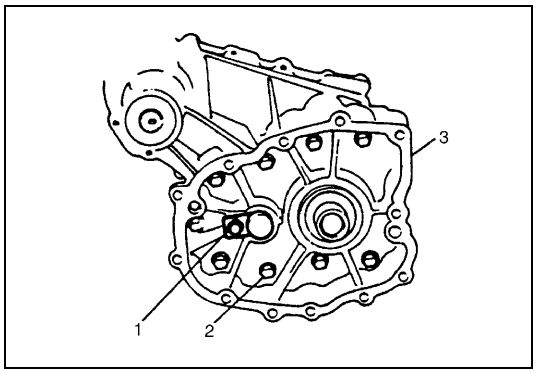

10) Remove counter shaft plate bolt (1) from front case (3), and counter shaft plate will come off.
11) Remove front case (3) by removing its 9 bolts (2).

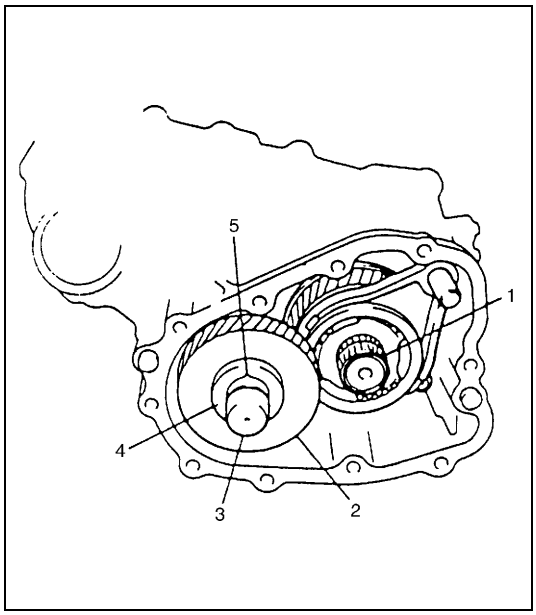

12) Remove input gear needle bearing (1).
13) Remove counter gear shaft (3) together with counter gear (2), needle bearings, friction ring, washers (4) and steel balls (5) from case.

NOTE:

- **Watch out for steel balls which come out from between shaft and washers (front and rear) so as not to lose them.**
- **Check friction ring lip for damage and wear. Replace if necessary.**
- **Neither O-ring nor friction ring should be removed unless absolutely necessary. If removed, use new parts for reinstallation. Removed ones should not be reused.**

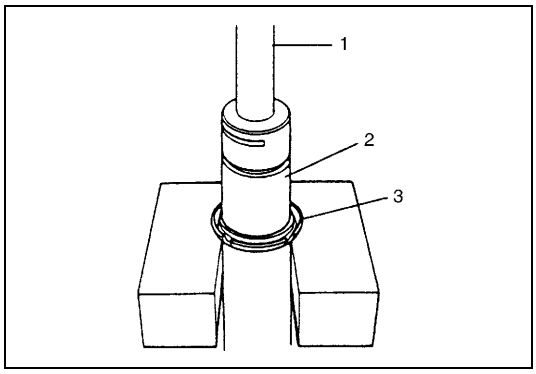

14) Remove O-ring from counter gear shaft (2) and then remove friction ring (3) from shaft, using a proper size rod (1) and press.

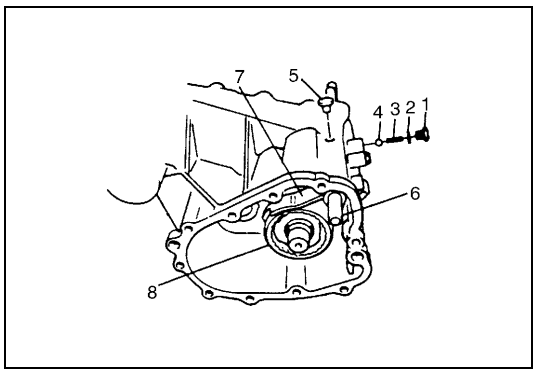

15) Remove locating spring bolt (1) with washer (2) (if equipped), spring (3) and ball (4) for reduction shift.
16) Pull out reduction shift shaft (6) together with fork (7) and sleeve (8).

NOTE:

For this removal, be sure to place front drive fork shaft at 4WD position.

17) Remove rubber plug (5) as well.

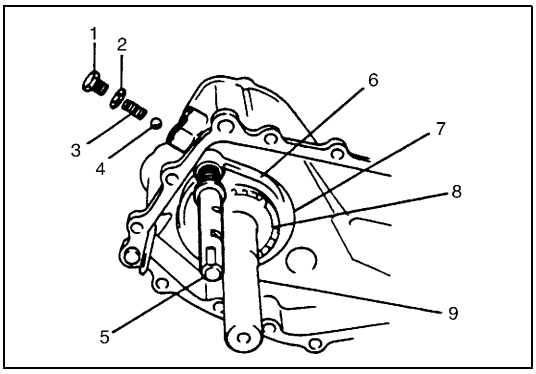

18) Remove locating spring bolt (1) with washer (2) (if equipped), spring (3) and ball (4) for front drive shift.
19) Pull out front drive shift fork (6) & shaft (5), sleeve (7) and hub (8) all together.

9. Output rear shaft

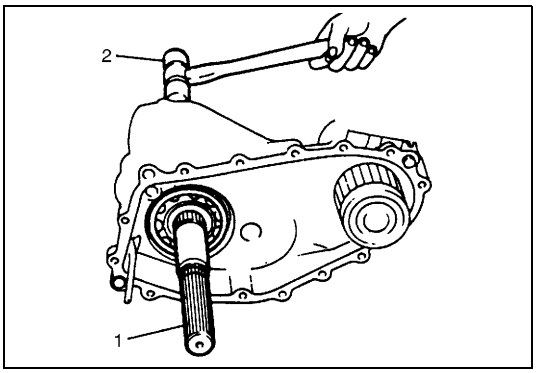

20) Using plastic hammer (2), drive out output rear shaft assembly (1) with bearing. Output low gear and reduction clutch hub also come off as they are installed to shaft.

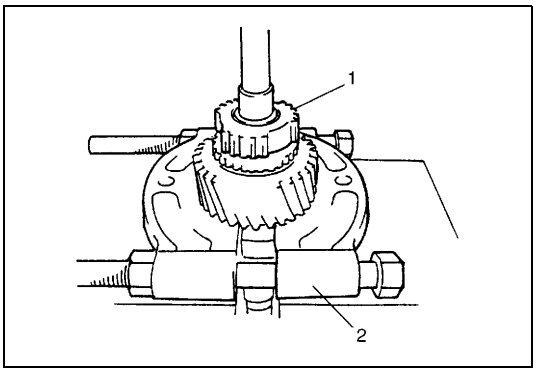

21) Pull off circlip from output rear shaft and remove reduction clutch hub (1) by using puller (2) and press. Then pull out output low gear and needle bearing.

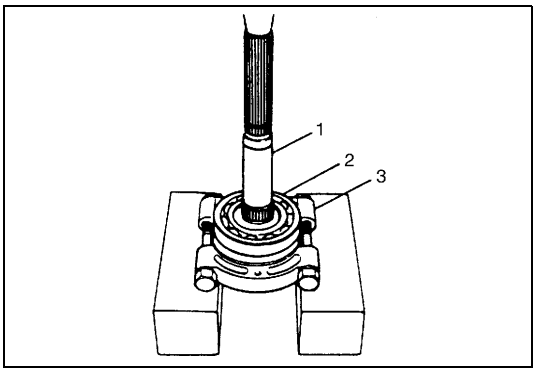

22) Using puller (3) and press, remove output rear shaft No. 1 bearing (2) from shaft (1).

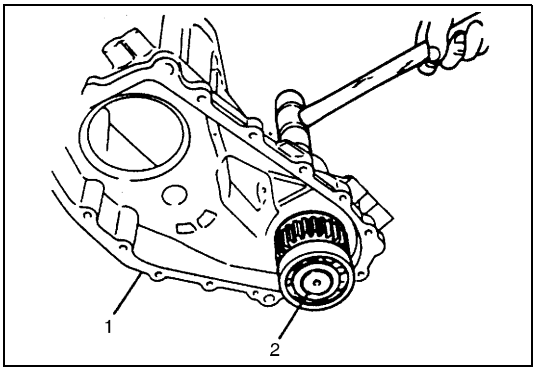

23) Remove oil seal from center case (1).
24) Using plastic hammer, drive out output front shaft (2) together with bearings.

CAUTION:

If oil seal remains in center case, be careful not to damage oil seal by hitting. Use drive punch for hammering.

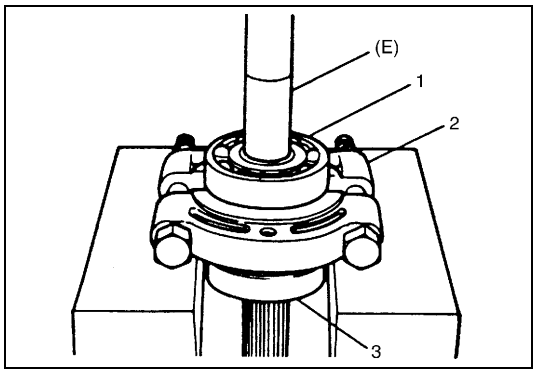

25) Take off bearings (1, 3) from shaft by using press and puller (2). Removal of front side bearing requires special tool additionally as shown in the figure.

Special tool
(E): 09925-98221

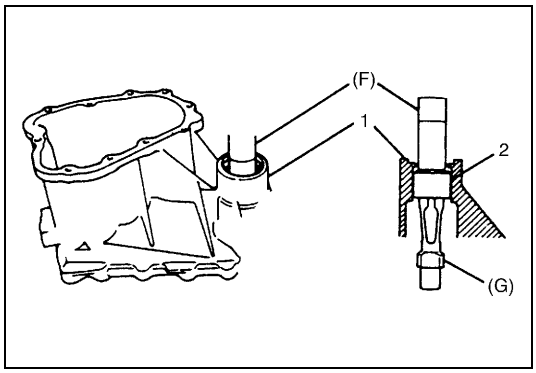

26) To remove needle bearing (2) from center case (1), combine special tools as shown in the figure and press them.

Special tool
(F): 09913-84510
(G): 09941-64511

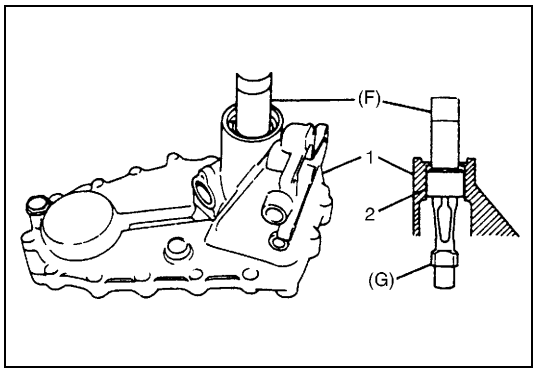

27) Remove oil seal from rear case (1). And then, using special tools and press, remove needle bearing (2) from rear case.

CAUTION:
Be careful not to damage oil seal, if it remains in rear case.

Special tool
(F): 09913-84510
(G): 09941-64511

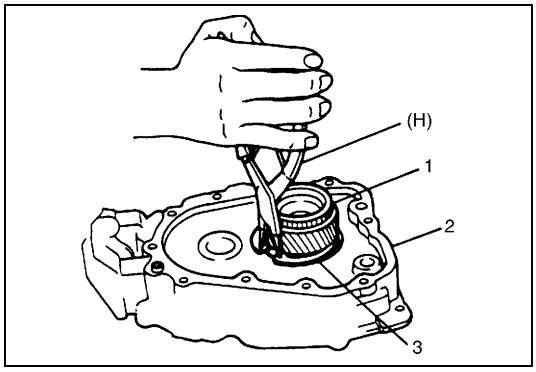

28) Using special tool, remove circlip (3) of input gear (1) from front case (2).

Special tool
(H): 09900-06107

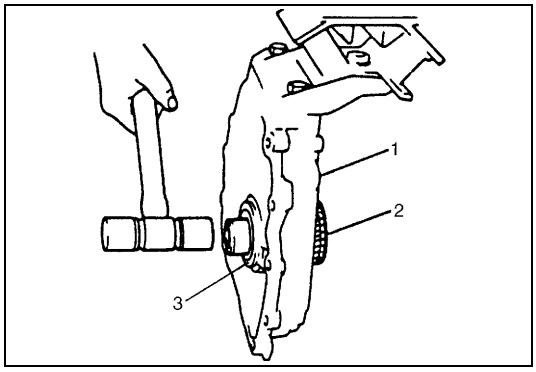

29) Using plastic hammer, drive input gear (2) out of front case (1).

NOTE:
- **Be careful not to damage oil seal (3) by hitting.**
- **If removed, do not reuse oil seal (3).**

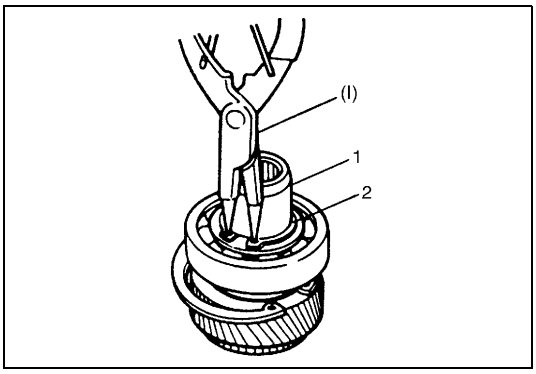

30) Remove circlip (2) of input gear (1) by using special tool.

Special tool
(I): 09900-06107

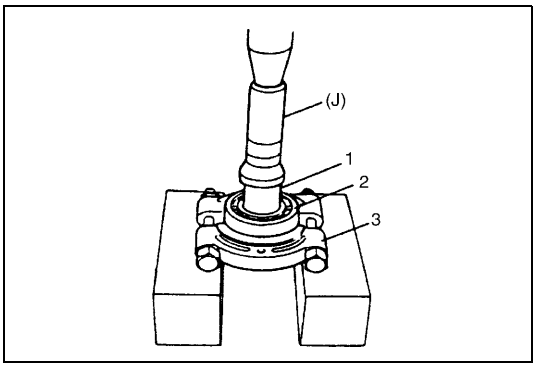

31) Remove bearing (2) from input gear (1) by using puller (3) and press.

NOTE:
Use metal pad for this removal, or gear spline may get damaged.

Special tool
(J): 09951-76010

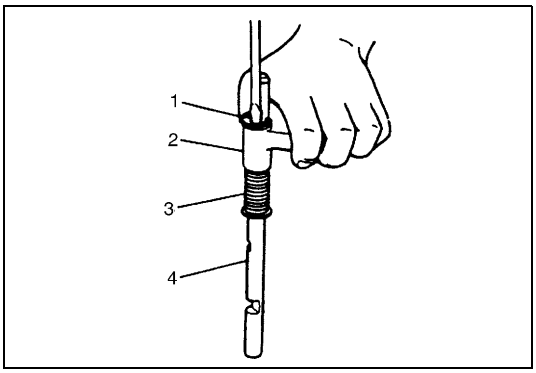

32) With spring (3) on front drive fork shaft (4) compressed, remove circlip (1) and then remove fork (2) and spring (3).

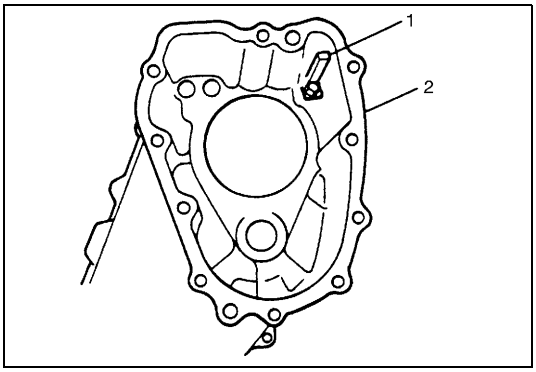

33) Remove center case gutter (1) from center case (2) with wrench.

Component Inspection

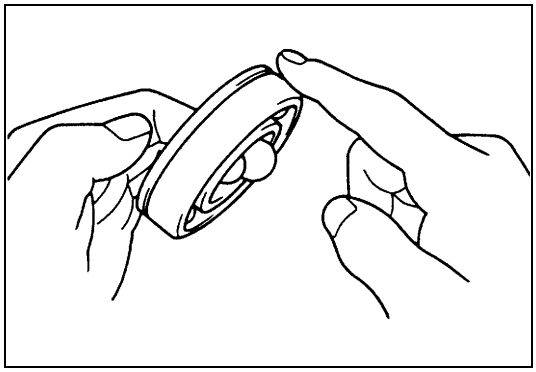

- Check each ball bearing for smooth rotation.
  If found abnormal, replace.

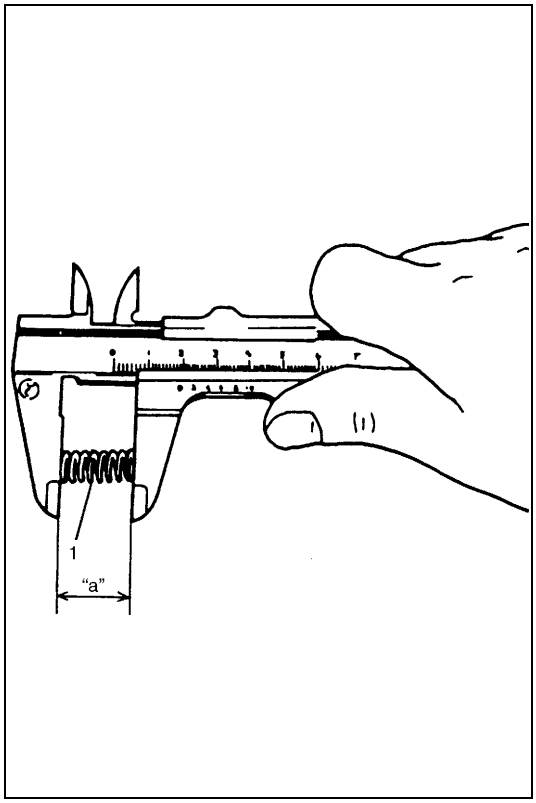

- Check each spring for distortion or breakage and change it with new one as necessary.
  Especially for locating springs (1), measure each free length "a" and replace if it is below service limit.

Locating spring free length "a":
Standard: 19.5 mm (0.768 in.)
Service limit: 18.0 mm (0.709 in.)

- Check needle bearing and bearing contacting surface for damage. Replace as required.
- Check gear tooth surface and shift mechanism in the same manner as with transmission.
  Correct or replace as necessary.
- Check drive chain and sprockets for abnormal wear or damage. Replace as required.
- Check oil seal for leakage and its lip for excessive hardness. If either is found, replace.
  Also, check corresponding surface of shaft where oil seal lip contacts. Correct or replace as necessary.
- Check gear tooth surface of speedometer drive gear.
  Replace if it is damaged.

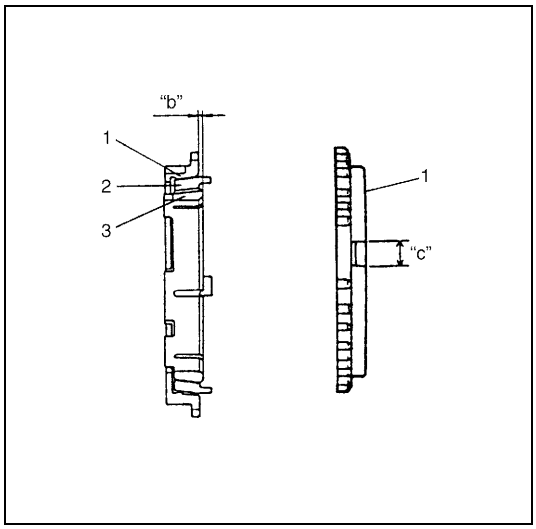

- Put the synchronizer outer ring (1), center cone (2) and inner ring (3) together and then measure the step difference "b" between the outer ring (1) and the inner ring (3). And also check key slot or boss width "c" in synchronizer outer ring (1) and each chamfered tooth of gear and synchronizer ring and replace with new one, if necessary. Also, check gear tooth.

Difference "b" between the outer ring and the inner ring:
Standard: 1.0 – 1.4 mm (0.039 – 0.055 in.)
Service limit: 0.5 mm (0.019 in.)

Slot or Boss width "c" in synchronizer outer ring:
Standard: 10.1 mm (0.397 in.)
Service limit: 10.4 mm (0.409 in.)

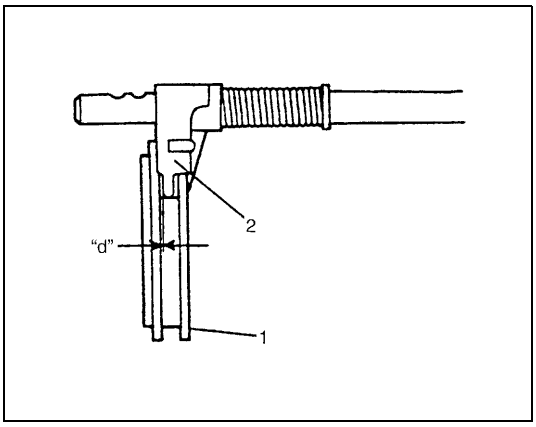

- Check chamfered part of each sleeve (1) for damage and excessive wear, and replace as necessary.
- Using feeler gauge, check clearance "d" between sleeve (1) and shift fork (2) and replace parts if necessary.

Clearance "d" between sleeve and shift fork:
Maximum 1.0 mm (0.039 in.)

- Check each synchronizer key and synchronizer spring and replace as necessary.
- Check splined portions and replace parts if excessive wear is found.

Assembly

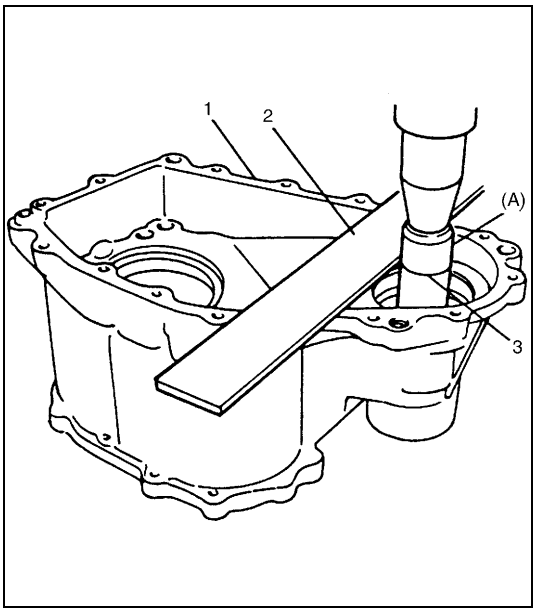

1) Using press and special tool, press-fit needle bearing into center case (1). As shown in the figure, apply straightedge (2) to top surface of case and press-fit till limit line (3) of special tool aligns with bottom surface of straightedge (2) (i.e., case surface).

NOTE:

- **Press-fitting needle bearing according to above procedure will set needle bearing 2 mm (0.078 in.) before it hits case bottom.**
- **Once it is press-fit all way down to case bottom, removal would be very difficult if it becomes necessary.**

Special tool
(A): 09951-76010

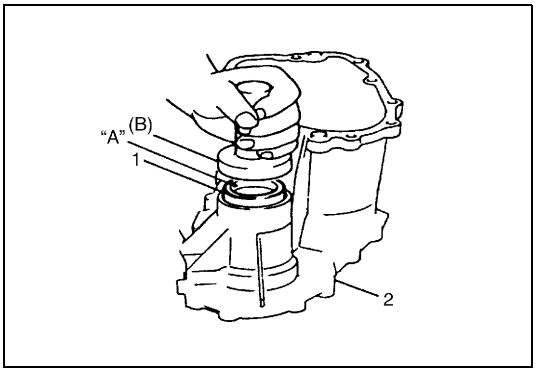

2) Using special tool and hammer, drive oil seal (1) into center case (2) until it becomes flush with case surface. Apply grease "A" to oil seal lip.

"A": Grease 99000-25010

Special tool
(B): 09913-75520

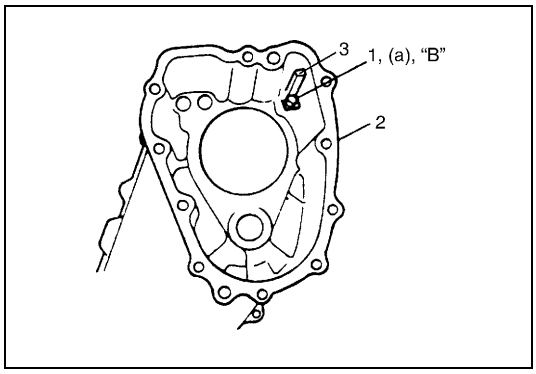

3) Install oil gutter (3) to center case (2) and tighten bolt (1) applying thread lock cement "B".

Tightening torque
Center case gutter bolt (a): 8 N·m (0.8 kg-m, 5.5 lb-ft)

"B": Cement 99000-32020

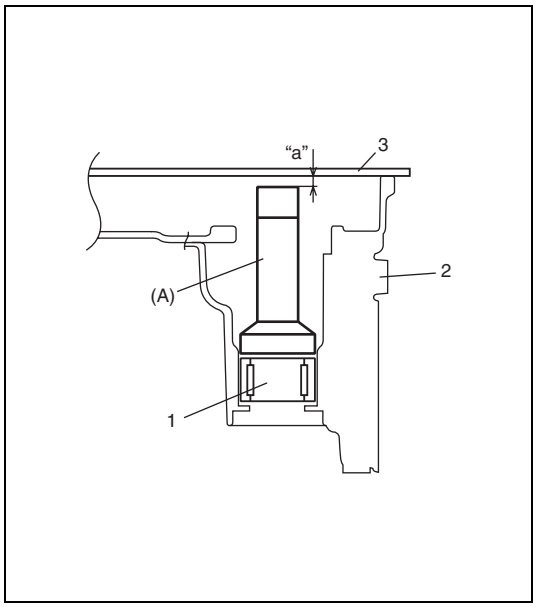

4) Using special tool and press, insert bearing (1) until it reaches the clearance "a" from end face of the case (2).

Clearance "a":
5.5 mm (0.217 in.) for Transfer type A
10.0 mm (0.395 in.) for Transfer type B

3. Straightedge

NOTE:

As with needle bearing in center case, above installation procedure will set needle bearing at a position 3 mm (0.117 in.) (for transfer type A) or 2mm (0.078 in.) (for transfer type B) before it hits case bottom.

Special tool
(A): 09951-76010

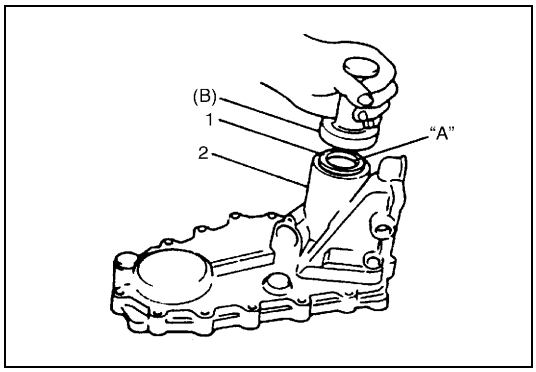

5) Using special tool and hammer, install oil seal (1) into rear case (2) until it becomes flush with case surface. Apply grease "A" to oil seal lip.

"A": Grease 99000-25010

Special tool
(B): 09913-75520

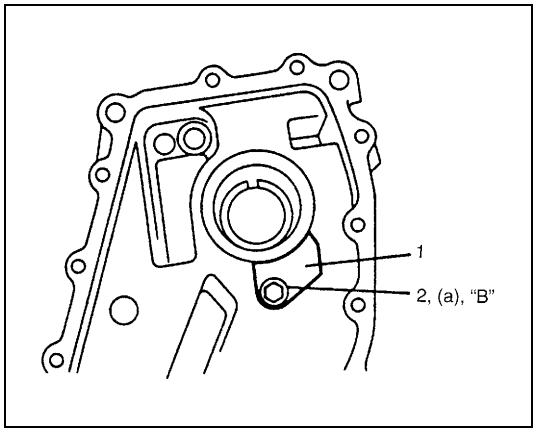

6) Install rear case plate (1) and bolt (2) applying thread lock cement "B".

NOTE:

Removal of rear case plate is not required normally. However, if it is removed or replaced, install it with bolt applied with thread lock cement.

"B": Cement 99000-32020

Tightening torque
Rear case plate bolt (a): 8 N·m (0.8 kg-m, 5.5 lb-ft)

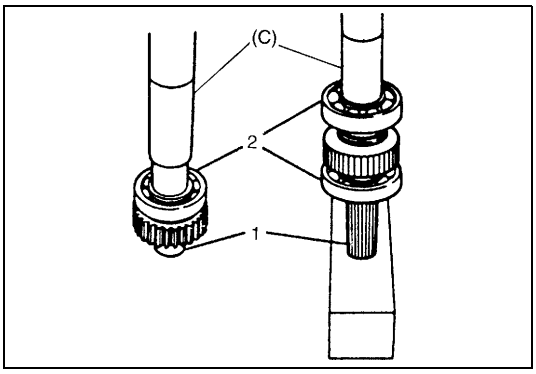

7) Using press and special tools, install bearings (2) to front shaft (1).
Bearings for both front and rear are identical.

Special tool
(C): 09913-84510

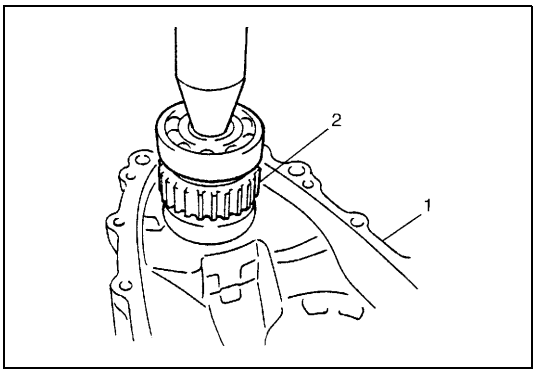

8) Using press, drive output front shaft assembly (2) into center case (1).

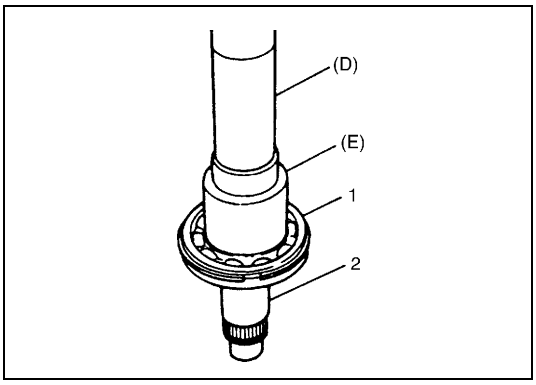

9) Using press and special tools, install output rear shaft No. 1 bearing (1) into output rear shaft (2). Place circlip portion of bearing on top as shown in figure.

Special tool
(D): 09925-18011
(E): 09940-53111

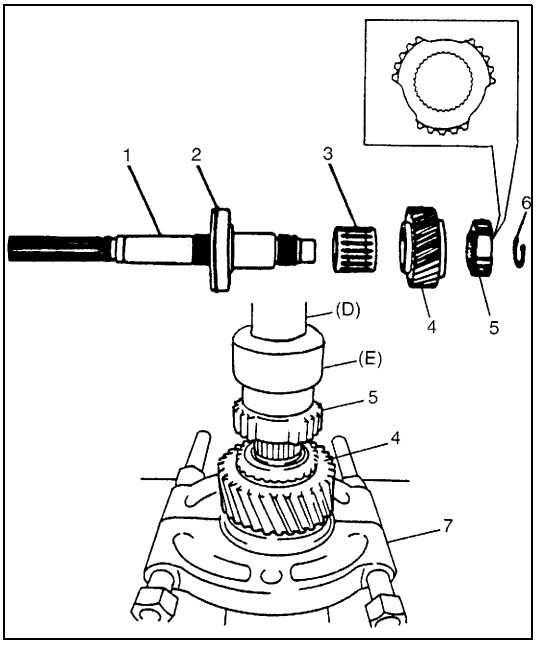

10) Install needle bearing (3) and output low gear (4) and then press-fit reduction clutch hub (5) onto output rear shaft (1) by using press and special tool and secure them with circlip (6). Hub has specific installing direction.

Special tool
(D): 09925-18011
(E): 09940-53111

2.	Output rear shaft No. 1 bearing
7.	Puller

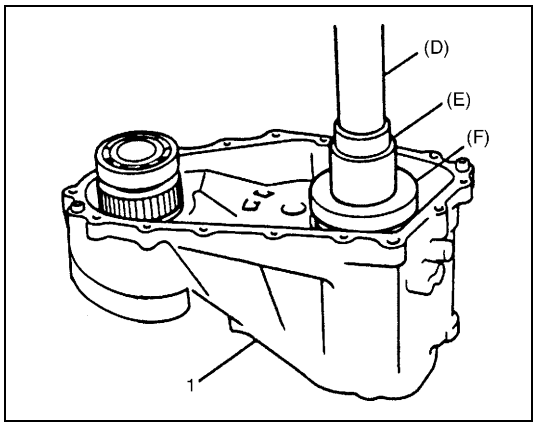

11) Combine special tools and press-fit output rear shaft assembly into center case (1).

NOTE:

Use special tool (F) with its under-cut side faced down (toward bearing).

Special tool
(D): 09925-18011
(E): 09940-53111
(F): 09951-26010

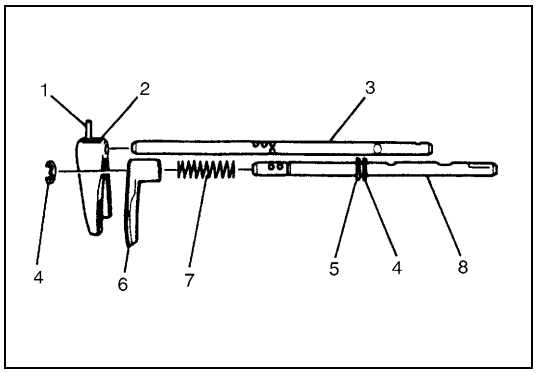

12) Install fork to corresponding shift shaft.

1.	Spring pin
2.	Reduction fork
3.	Reduction shift shaft
4.	Circlip
5.	Washer
6.	Front drive shift fork
7.	Spring
8.	Front drive shift shaft

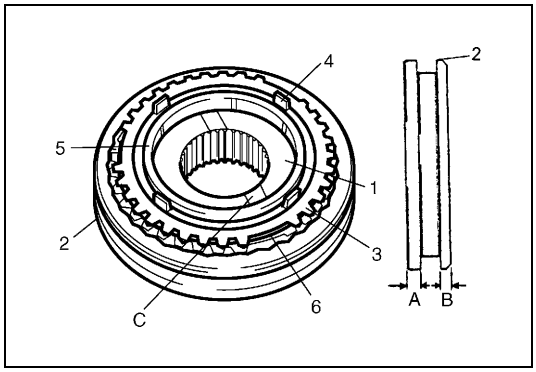

13) Fit sleeve to front drive clutch hub (1), synchronizer spring (6) with synchronizer outer ring (3), center cone (4) and synchronizer inner ring (5). When installing, note that front drive clutch hub (1) and sleeve (2) have specific installing direction.

A:	Thick (Front side)
B:	Thin (Rear side)
C:	Oil groove (Rear side)

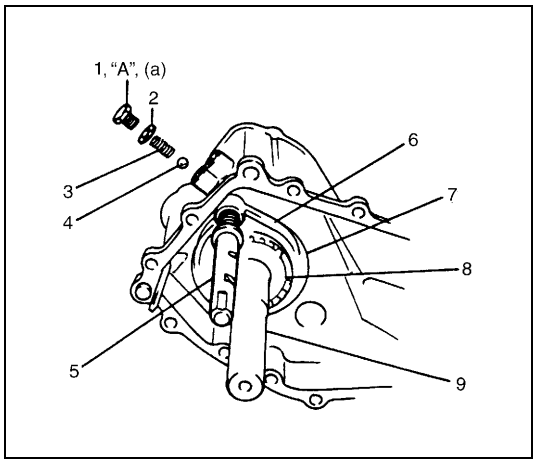

14) Install front drive fork shaft (5) assembly and sleeve (7) & hub (8) together into center case all at once. Then put locating ball (4) and spring (3) also into case and tighten locating spring bolt (1) with washer (2) (if equipped) to specified torque.

"A": Cement 99000-32020

Tightening torque
Locating spring bolt (a): 26 N·m (2.6 kg-m, 19.0 lb-ft)

6.	Shift fork
9.	Output rear shaft

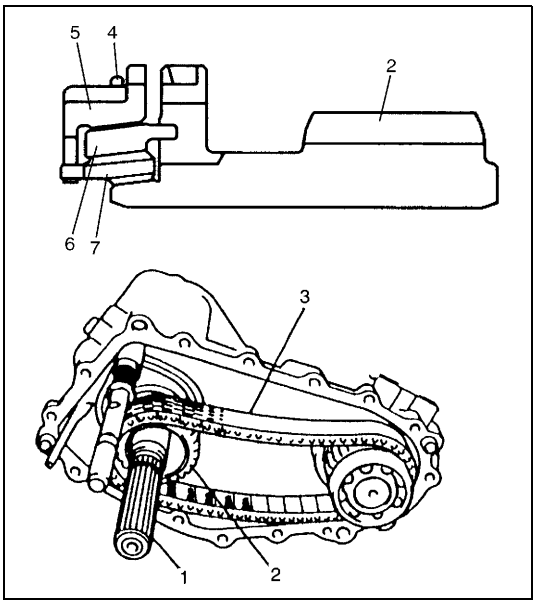

15) With the outer ring (5), spring (4) (if equipped), cone (6) and inner ring (7) put together and installed to sprocket gear (2) as shown in figure, install them together with chain (3) to output rear shaft (1).

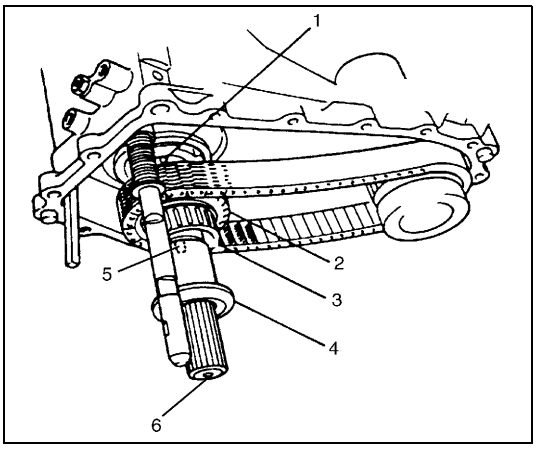

16) Install steel ball (1) (if equipped) to output rear shaft (6) front side ball hole between output rear shaft No. 2 bearing position and speedometer drive gear position.
17) Install needle bearing (3) to sprocket gear (2).
18) Install bush (4) to sprocket gear (2) with aligning sprocket gear ball hole (5) (if equipped) to steel ball (1).

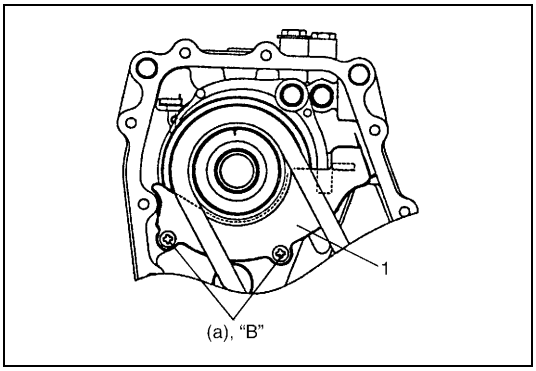

19) Install synchronizer plate (1).

Tightening torque
Synchronizer plate screw (a): 8 N·m (0.8 kg-m, 5.5 lb-ft)

"B": Cement 99000-32020

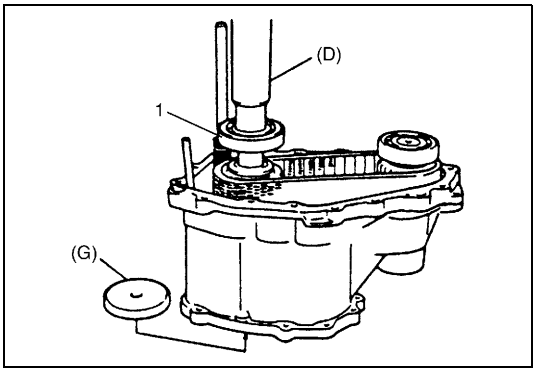

20) Using special tool, press-fit output rear shaft No. 2 bearing (1) into output rear shaft. It is necessary to place support base at lower end of shaft.

Special tool
(D): 09925-18011
(G): 09926-68310

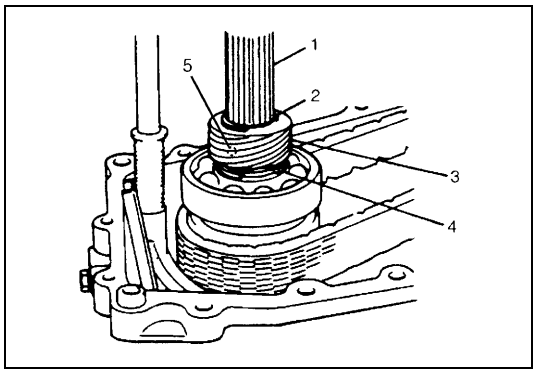

21) After installing large size circlip (4) and steel ball (5), install speedometer drive gear (3) and secure it with small size circlip (2).

1.	Output rear shaft

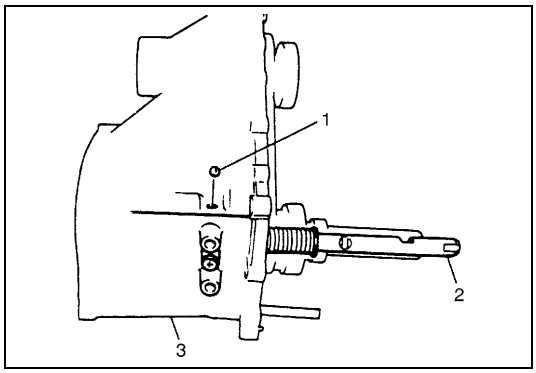

22) Install interlock steel ball (1).

2.	Front drive shift shaft
3.	Center case

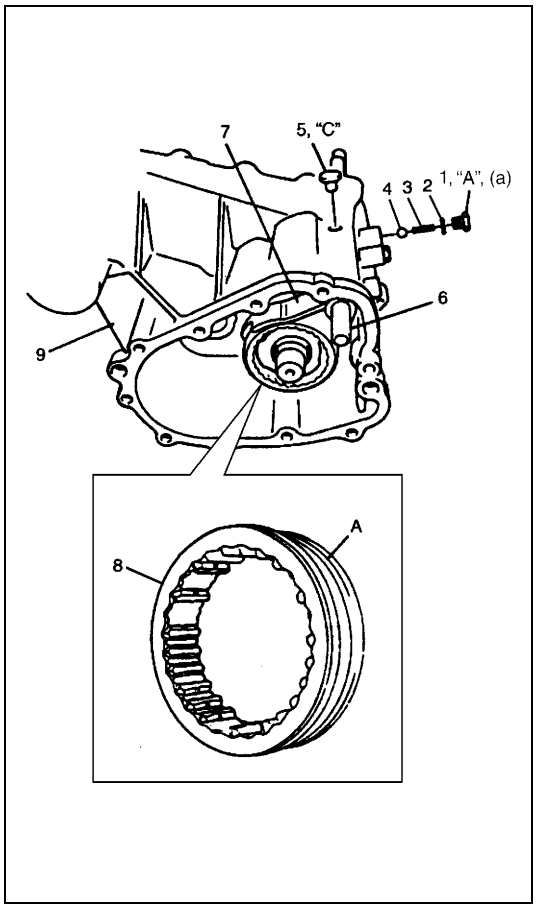

23) Combine sleeve (8) to reduction shift shaft assembly (6) and install them into center case (9). Then put locating ball (4) and spring (3) also into case and tighten locating spring bolt (1) with washer (2) (if equipped) to specified torque.

NOTE:

- **Circumferential groove mark (thicker rail side which works as shift stopper) should be inside (rear).**
- **Hub has no specific direction.**

"A": Cement 99000-32020

Tightening torque
Locating spring bolt (a): 26 N·m (2.6 kg-m, 19.0 lb-ft)

24) With sealant applied to rubber plug (5), insert it into hole in case.

NOTE:

When installing reduction shift shaft, front drive shift shaft must be placed at 4WD position.

"C": Sealant 99000-31260

A:	Groove (center case side)
7.	Shift fork

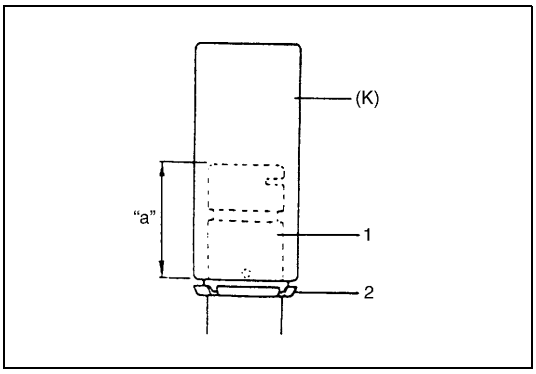

25) If friction ring (2) has been removed from counter shaft (1), press-fit new one onto shaft, using care so that it is installed in proper direction and position as shown in the figure.

Special tool
(K): 09913-80112

Installing position
"a": 39.5 mm (1.56 in.)

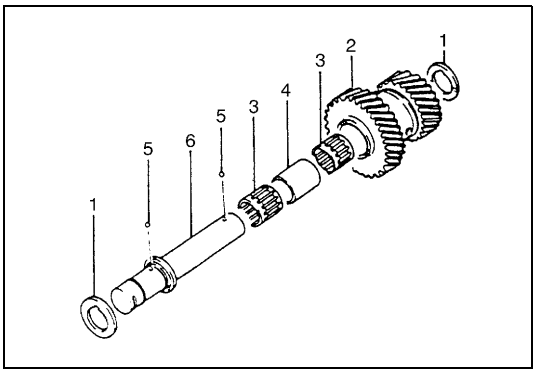

26) Install needle bearings (3), spacer (4), counter gear (2), steel balls (5) and washers (1) onto shaft (6).

NOTE:

Washers must be installed with its oil slot side facing gear.

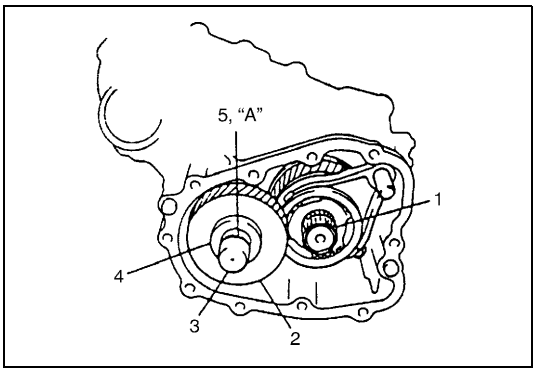

27) Install counter shaft assembly into case. If O-ring (5) has been removed, install new O-ring onto shaft (3) and apply grease "A".
Also, install low gear needle bearing (1).

"A": Grease 99000-25010

2.	Counter gear
4.	Washer

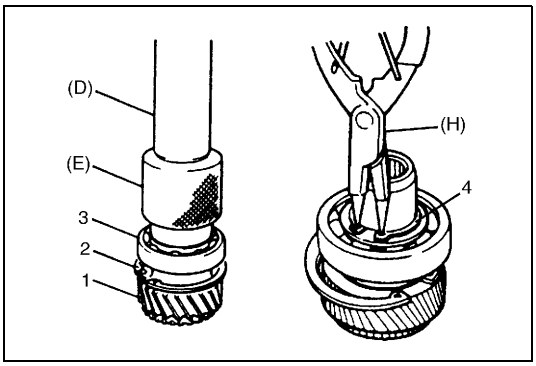

28) With circlip (2) placed on input gear (1), press-fit input gear bearing (3) as shown.

Special tool
(D): 09925-18011
(E): 09940-53111
(H): 09900-06107

29) Fix bearing with circlip (4).

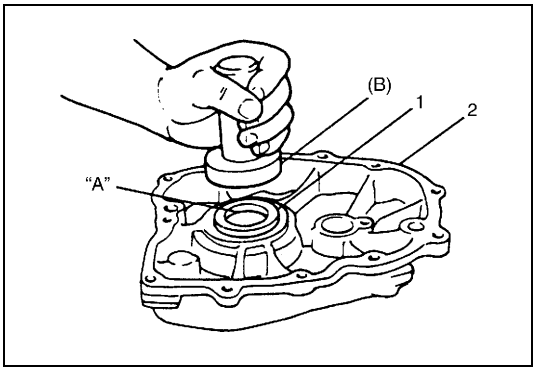

30) Install oil seal (1) to front case (2) so that end surface of oil seal becomes flush with that case. Apply grease "A" to oil seal lip.

"A": Grease 99000-25010

Special tool
(B): 09913-75520

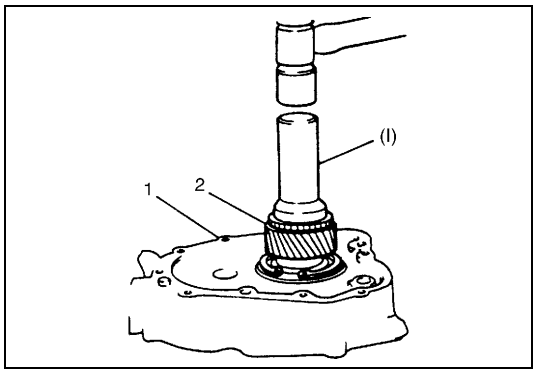

31) Using special tool, drive input gear assembly (2) into front case (1).

Special tool
(I): 09951-16080

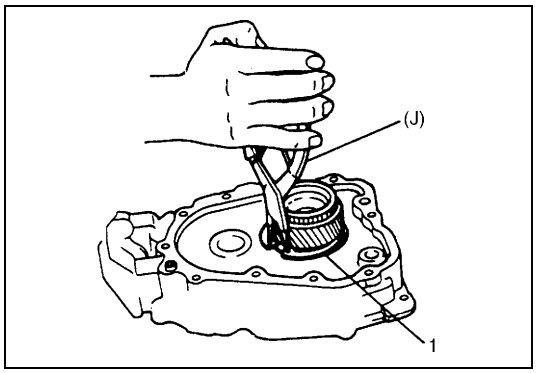

32) Fix with circlip (1) by means of snap ring plier.

Special tool
(J): 09900-06107

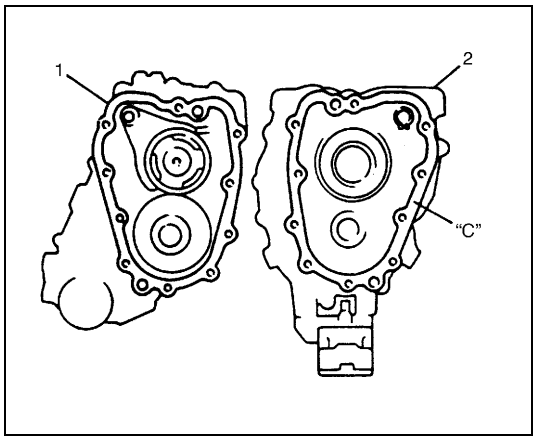

33) Oil to rotating parts and clean mating surfaces of center case (1) and front case (2).
34) Apply sealant "C" to mating surface of front case (2) evenly and put cases together.

NOTE:

- **For smooth installation of front case, apply grease to counter shaft O-ring.**
- **When mating front case, make sure that input gear meshes with counter gear first.**

"C": Sealant 99000-31260

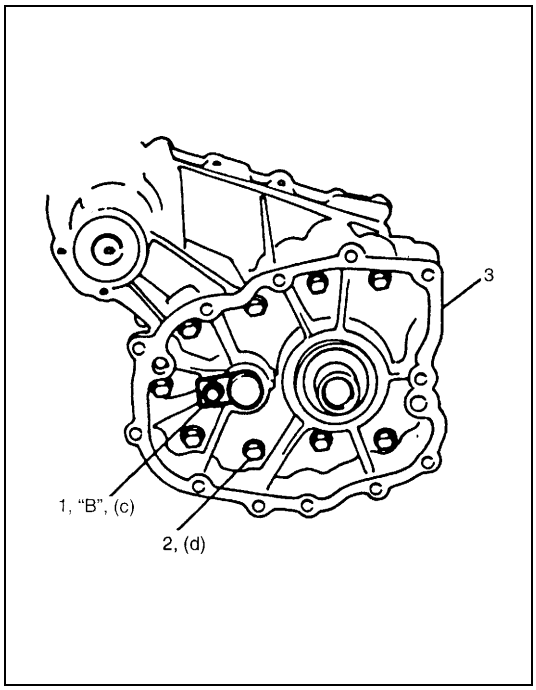

35) Tighten 9 front case bolts (2) to specified torque.

Tightening torque
Front case bolt (d): 23 N·m (2.3 kg-m, 17.0 lb-ft)

36) Tighten counter shaft plate fixing bolt (1) applied with thread lock cement to specified torque.

NOTE:

- **After tightening bolts, check input gear and output rear shaft for smooth rotation by hand at low and high speed position.**
- **Also check front drive shift for proper operation.**

"B": Cement 99000-32020

Tightening torque
Counter shaft plate bolt (c): 23 N·m (2.3 kg-m, 17.0 lb-ft)

3. Front case

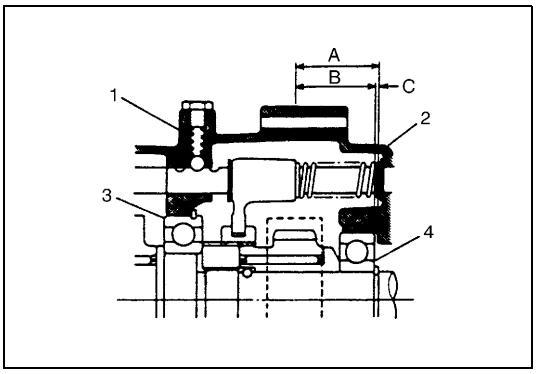

37) Before assembling rear case (2), adjust clearance “C” selecting shim size as follows.

1.	Center case
3.	Rear shaft bearing No. 1
4.	Rear shaft bearing No. 2
	A - B = C (Clearance)

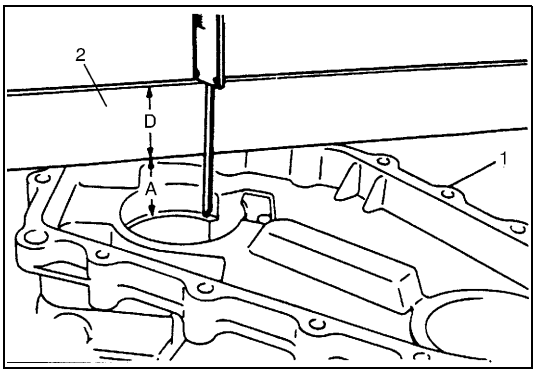

a) Measure rear case (1) dimension “A” (from mating surface to bearing bore bottom) by using straightedge (2) and vernier caliper. Width of straightedge “D” plus “A” is obtained.

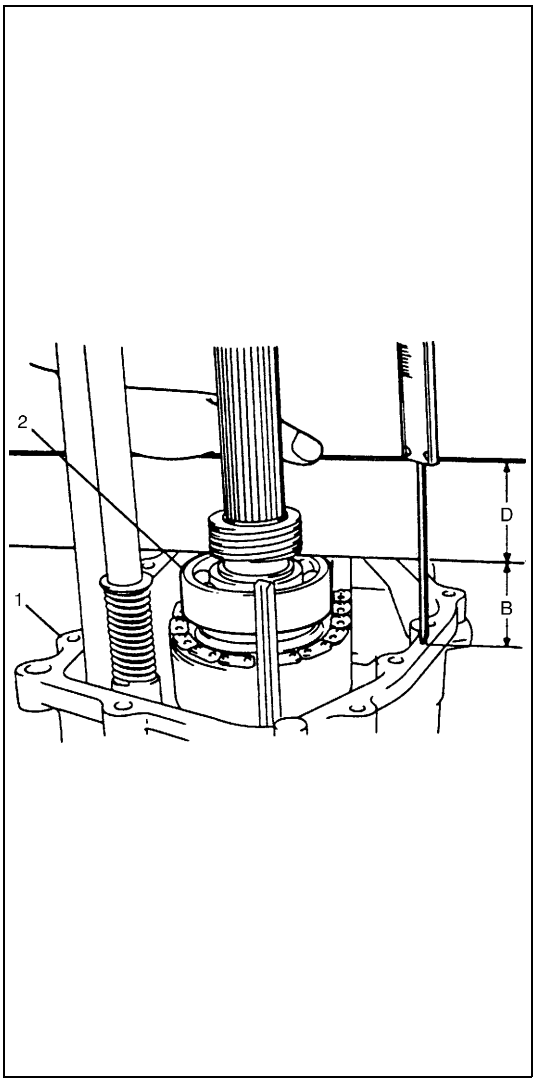

b) Place straightedge on bearing No. 2 (2) securely and measure bearing height “B” (from center case (1) mating surface to No. 2 bearing top).

CAUTION:
Bridging straightedge between No. 2 bearing and output front shaft bearing brings misreading.

c) Obtain clearance “C” in following calculation.

“C” = (“A” + “D”) – (“B” + “D”)

d) Select a shim from among following available sizes and install it in bearing bore of rear case.

CAUTION:
Installing of over sized shim beyond specification in the following table may cause tight rotation of rear shaft and consequential bearing damage.

Shim specification:

Clearance C	Shim size
0 – 0.13 mm (0 – 0.005 in)	NO NEED
0.13 – 0.23 mm (0.005 – 0.009 in)	0.1 mm (0.004 in)
0.23 – 0.33 mm (0.009 – 0.013 in)	0.2 mm (0.008 in)
0.33 – 0.43 mm (0.013 – 0.017 in)	0.3 mm (0.012 in)
0.43 – 0.53 mm (0.017 – 0.021 in)	0.4 mm (0.016 in)
0.53 – 0.58 mm (0.021 – 0.023 in)	0.5 mm (0.020 in)

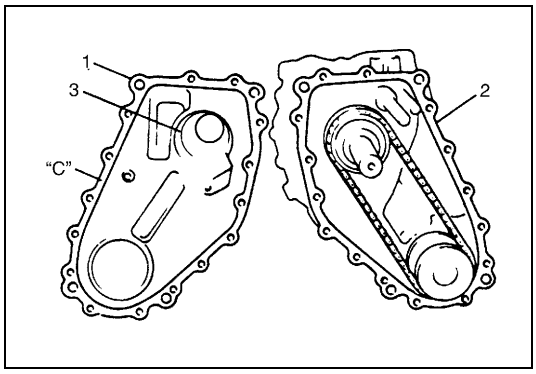

38) Clean mating surfaces of both center (2) and rear (1) cases again, apply sealant to mating surface of rear case.

"C": Sealant 99000-31260

3. Install shim

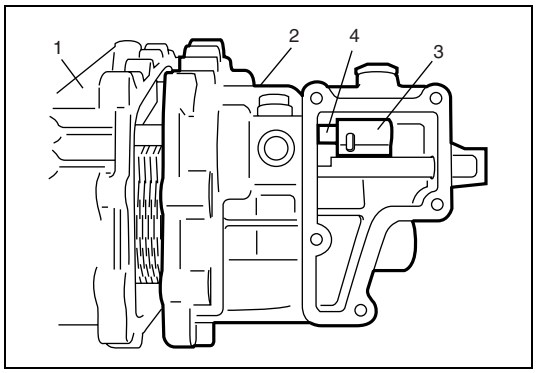

39) Put together center case (1) and rear case (2) with installing yoke (3) to reduction shift shaft (4).

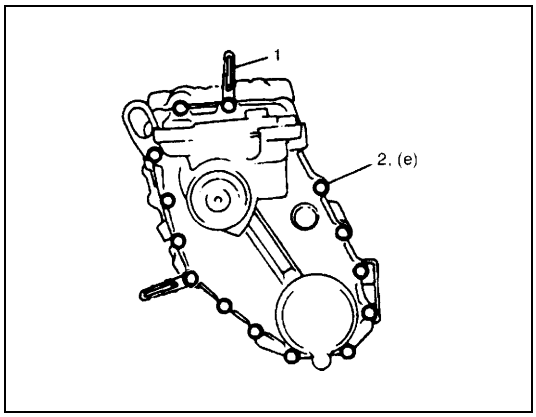

40) Torque 15 rear case bolts (2) to specification.

NOTE:

After tightening bolts, provisionally install universal joint flange into rear shaft and check to make sure smooth rotation of shaft.

Tightening torque
Rear case bolt (e): 23 N·m (2.3 kg-m. 17.0 lb-ft)

1. Clamp

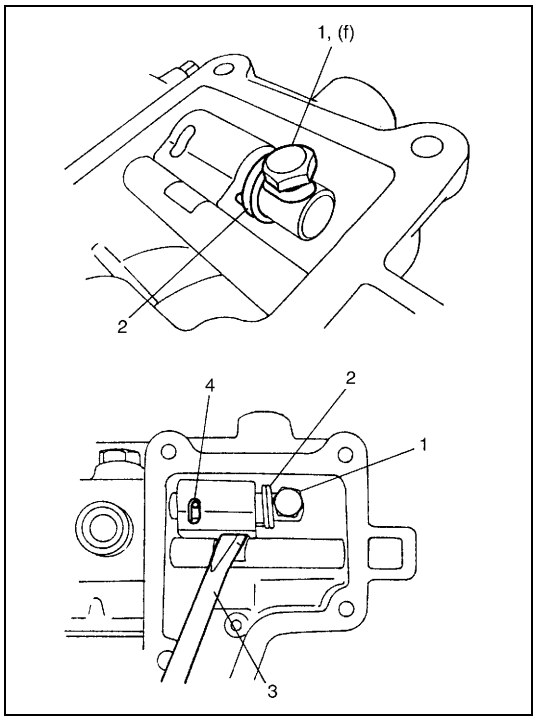

41) For transfer type B
Perform the following procedure.

a) With reduction shift shaft shifted to high speed side, fit yoke to shaft and install return spring (2) as shown in the figure. Tighten bolt (1) to specified torque.

Tightening torque
Select return spring bolt (For transfer type B)
(f): 5.5 N·m (0.55 kg-m, 4.0 lb-ft)

b) Fix reduction shift yoke with spring pin (4) while aligning shift yoke with shift shaft as shown in the figure.

3. Screwdriver

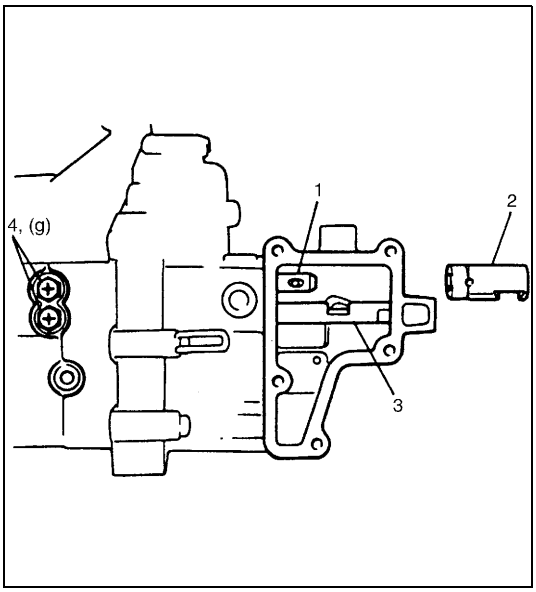

42) For transfer type A
Perform the following procedure.
a) With reduction shift shaft (1) shifted to left (at high speed side) as shown in the figure, fit yoke (2) to shaft (1) and fix it with spring pin.

NOTE:

Be careful not to let spring pin fall off.

b) Tighten locating spring bolts (4) of shifters to specified torque.

Tightening torque
Locating spring bolt (g): 26 N·m (2.6 kg-m, 19.0 lb-ft)

3. Front drive shift shaft

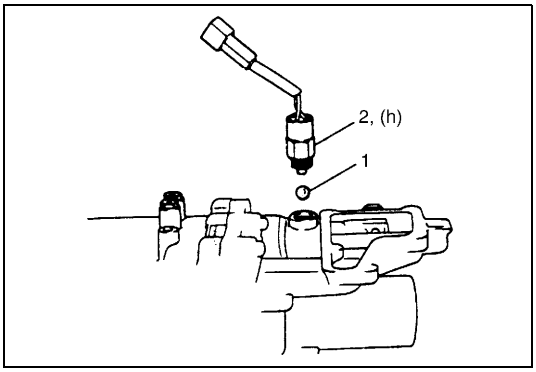

43) Install steel balls (1) and 4WD (2)/4WD-LOW switches.

Tightening torque
4WD switch (h): 20 N·m (2.0 kg-m, 14.5 lb-ft)
4WD-Low switch: 20 N·m (2.0 kg-m, 14.5 lb-ft)

44) Install vehicle speed sensor to rear case.

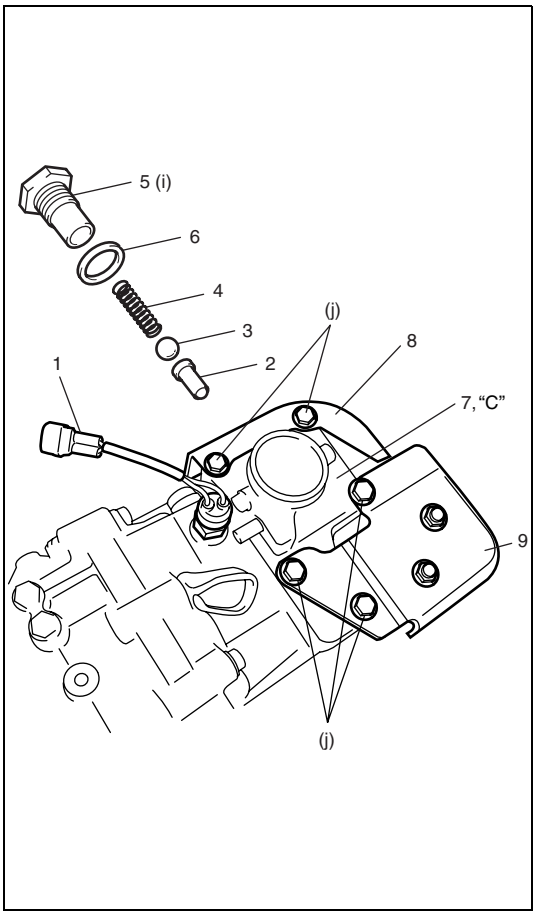

45) Fix lead of 4WD switch (1) with clamp.
46) Apply grease "A" to select return system parts and install them. Then tighten select return spring bolt (5) to specified torque (For transfer type A).

"A": Grease 99000-25010

Tightening torque
Select return spring bolt (For transfer type A)
(i): 35 N·m (3.5 kg-m, 25.5 lb-ft)

47) Clean mating surfaces of both gear shift lever case (7) and rear case, and with sealant "C" applied to mating surface of gear shift lever case, push both cases together.

"C": Sealant 99000-31260

48) Tighten gear shift lever case bolts to specification along with rear cover (8) and transfer damper bracket (9) (if equipped).

Tightening torque
Gear shift lever case bolt (j): 23 N·m (2.3 kg-m, 16.5 lb-ft)

2. Select return pin
3. Ball
4. Select return spring
6. Washer

49) Install gear shift control lever temporarily and check to make sure that it shifts to each shift position smoothly. Also check shaft for rotation.

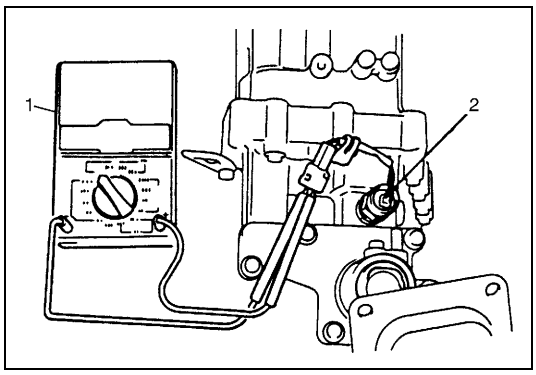

50) Confirm 4WD switch (2) terminals are continuity at 4WD position (4H and 4L) by using ohmmeter (1).

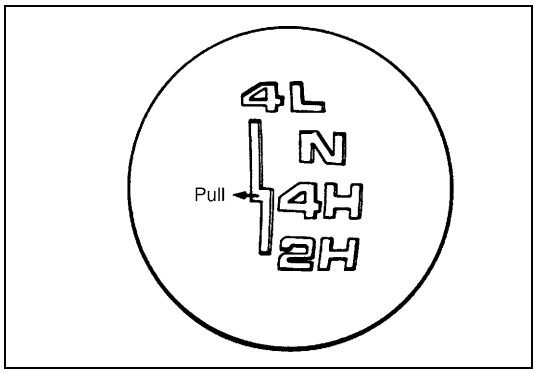

51) For A/T model, confirm 4WD LOW switch terminals are continuity at 4WD LOW and Neutral position.
52) Upon completion of above checks, remove shift control lever.

Tightening Torque Specification

Fastening part	Tightening torque		
	N•m	kg-m	lb-ft
Center case gutter bolt	8	0.8	5.5
Rear case plate bolt	8	0.8	5.5
Front case bolt	23	2.3	17.0
Counter shaft plate bolt	23	2.3	17.0
Rear case bolt	23	2.3	17.0
Locating spring bolt	26	2.6	19.0
4WD switch and 4WD- LOW switch	20	2.0	15.5
Select return spring bolt (M18)	35	3.5	25.5
Select return spring bolt (M6)	5.5	0.55	4.0
Gear shift lever case bolt	23	2.3	16.5
Synchronizer plate screw	8	0.8	5.5

Required Service Material

Material	Recommended SUZUKI product (Part Number)	Use
Lithium grease	SUZUKI SUPER GREASE A (99000-25010)	• Oil seal lips and O-rings. • Select return system.
Thread lock cement	THREAD LOCK CEMENT SUPER 1333B (99000-32020)	• Center case gutter bolt. • Rear case plate bolt. • Locating spring bolt • Countershaft plate bolt. • Synchronizer plate screws.
Sealant	SUZUKI BOND No. 1217G (99000-31260)	• Rubber plug. • Mating surface of front case. • Mating surface of rear case. • Mating surface of gear shift lever case.

Special Tool

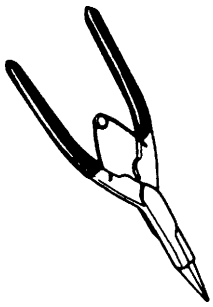 09900-06107 Snap ring plier (Opening type)	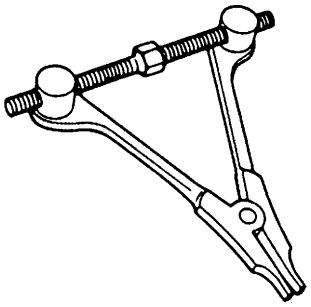 09912-34510 Separator	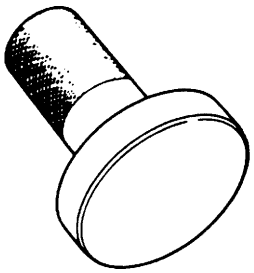 09913-75520 Bearing installer	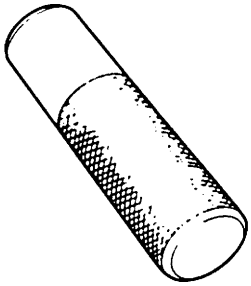 09913-80112 Bearing installer
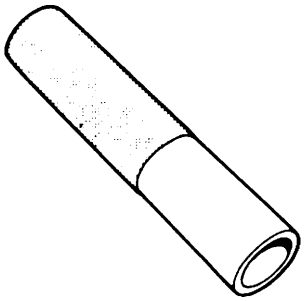 09913-84510 Bearing installer	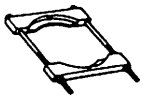 09921-57810 Bearing remover	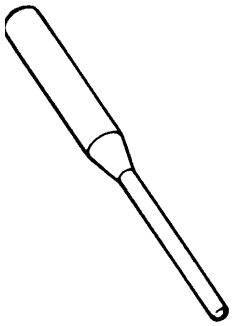 09922-85811 Spring pin remover	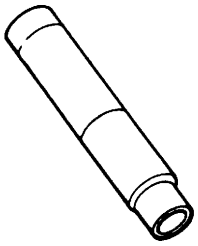 09925-18011 Bearing installer

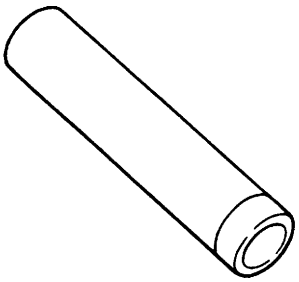 09925-98221 Bearing installer	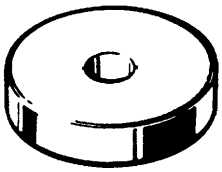 09926-68310 Bearing installer	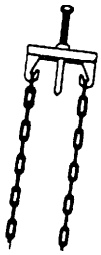 09927-18411 Universal puller	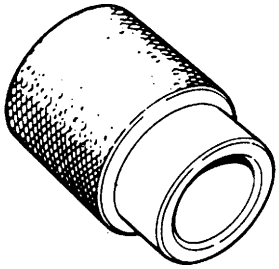 09940-53111 Bearing installer
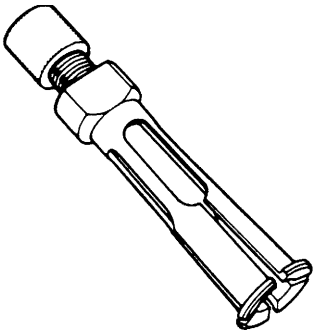 09941-64511 Bearing remover	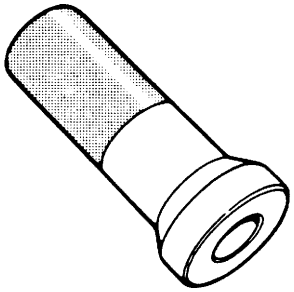 09951-16080 Bearing installer	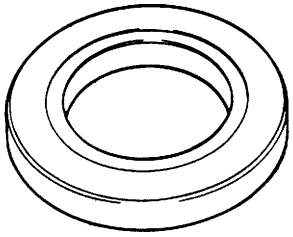 09951-26010 Bush remover plate	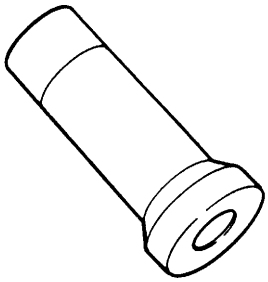 09951-76010 Bearing installer

SECTION 7E

DIFFERENTIAL (FRONT) (AIR PUMP SHIFTING TYPE)

CONTENTS

General Description

Component

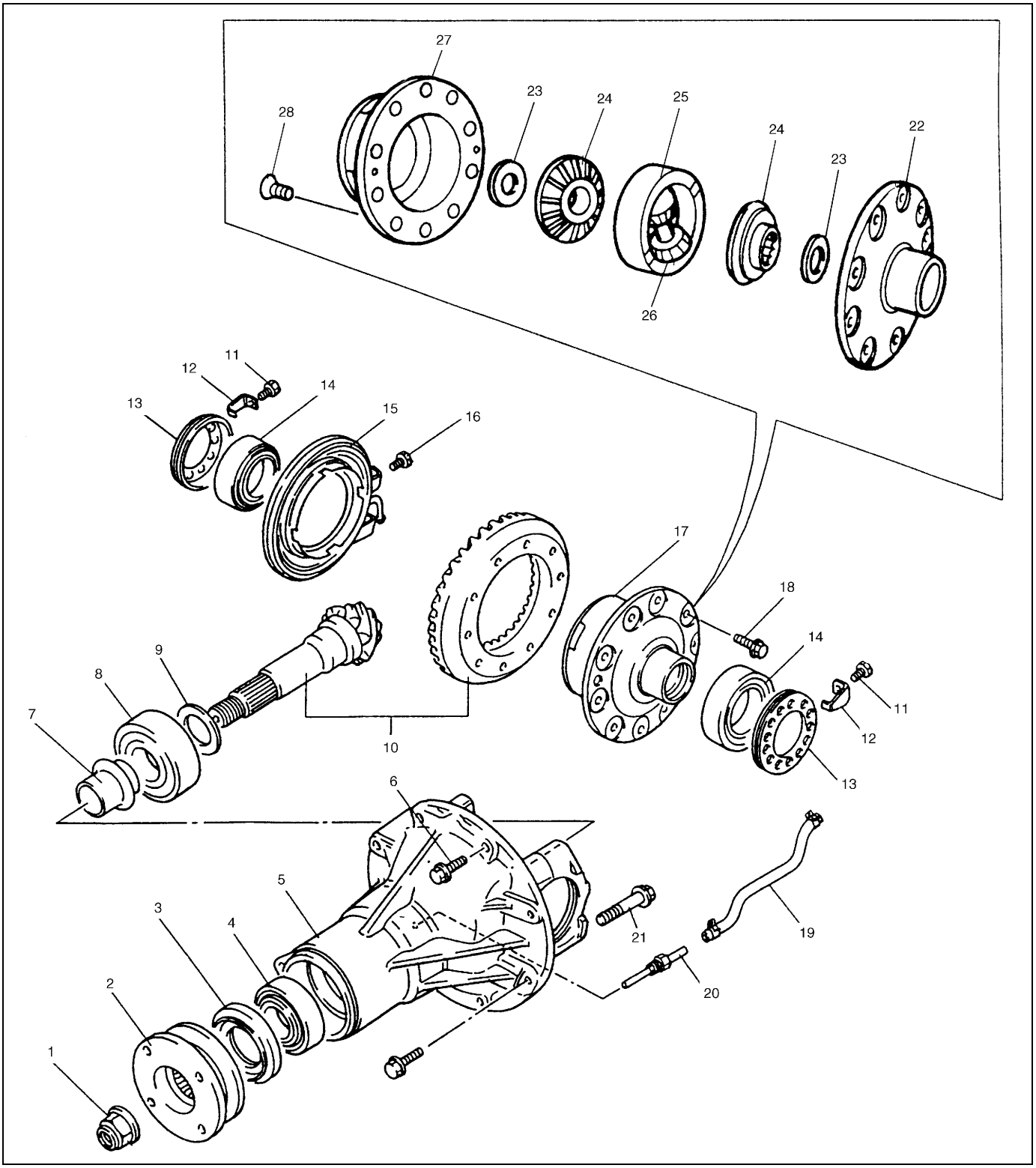

1. Flange nut	8. Front bearing	15. Actuator	22. Differential right case
2. Universal joint flange	9. Shim	16. Bolt	23. Thrust washer
3. Oil seal	10. Bevel pinion gear set	17. Differential case assembly	24. Differential gear
4. Rear bearing	11. Bolt	18. Bevel gear bolt	25. Free axle hub
5. Carrier assembly	12. Lock plate	19. Differential inner air hose	26. Differential pinion
6. Bolt	13. Bearing adjuster	20. Air inlet union	27. Differential left case
7. Bevel pinion spacer	14. Differential side bearing	21. Bearing cap bolt	28. Screw

Unit Repair

Disassembly Unit

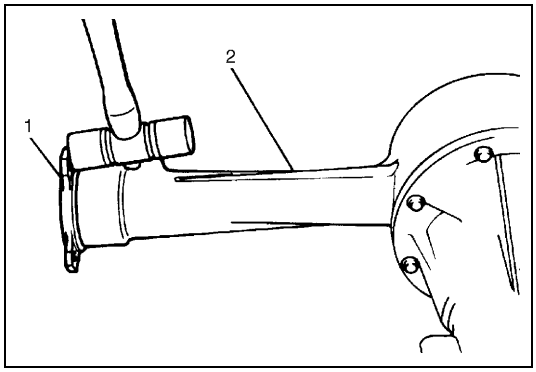

1) Remove front drive shaft (1) by using plastic hammer.

2.	Differential housing

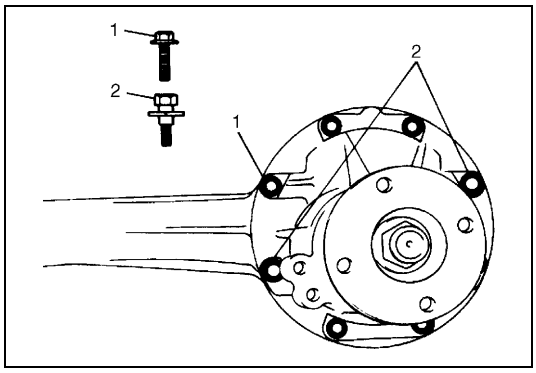

2) Remove 8 bolts for fastening differential carrier (2 of which are reamer bolts) and then take differential assembly out of housing.

1.	Bolt
2.	Reamer bolt

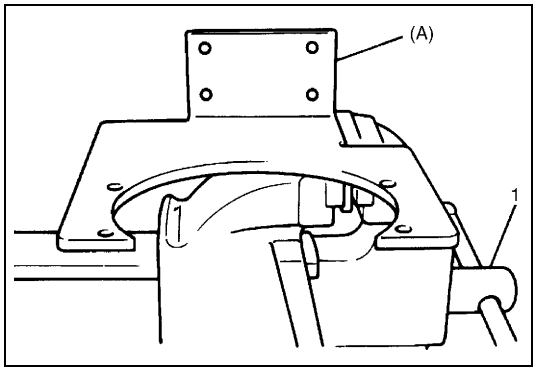

3) Set special tool on vise (1) securely.

Special tool
(A): 09944-76010

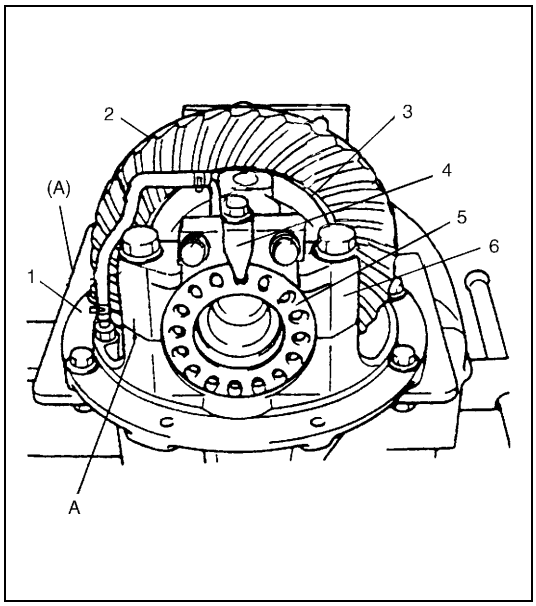

4) Using 4 bolt & nut sets, set differential assembly onto differential carrier holder and put identification marks on differential side bearing caps (6).
   Remove differential inner hose and actuator bracket bolt.
5) Take off differential side bearing lock plates (4) and differential side bearing caps (6) removing their bolts and then take out bearing adjusters (5), side bearing outer races and drive bevel gear with differential case (3).
6) Turn differential assembly together with special tool by 90 degrees and grip it with vise again.

Special tool
(A): 09944-76010

1.	Differential carrier
2.	Drive bevel gear assembly
A:	Identification mark

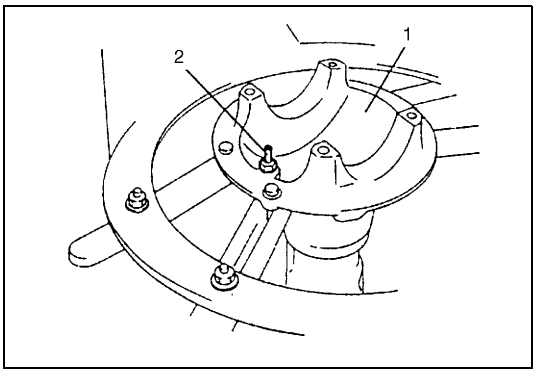

7) Remove air inlet union (2).

1. Differential carrier

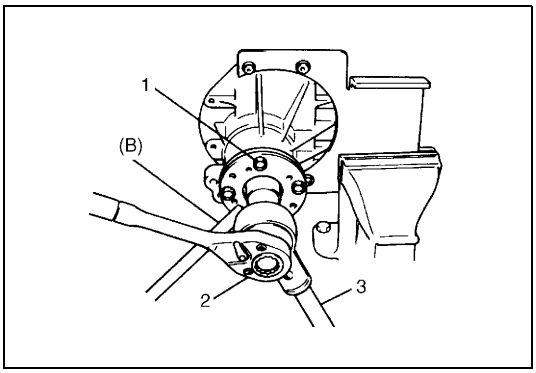

8) Hold universal joint flange with special tool and then remove flange nut by using power wrench.

Special tool
(B): 09922-66020

1. Bolt and nut
2. Socket wrench
3. Power wrench (4 – 10 magnification)

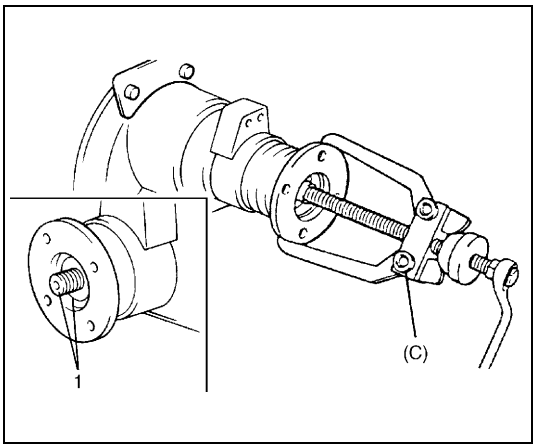

9) Make mating marks (1) on drive bevel pinion and companion flange.

CAUTION:
Don't make mating mark on the coupling surface of the flange.

10) Remove companion flange from pinion. Use special tool if it is hard to remove.

Special tool
(C): 09913-65135

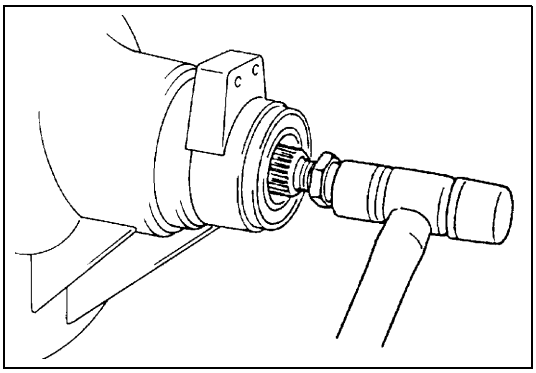

11) Remove bevel pinion with front bearing, and spacer from carrier.
If it is hard to remove, screw an used nut into pinion and hammer on that nut with a plastic hammer but never directly on pinion.

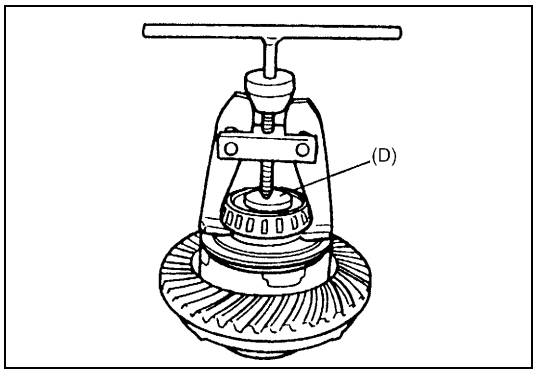

12) Using special tools, pull out differential side bearings.

Special tool
(D): 09913-85230

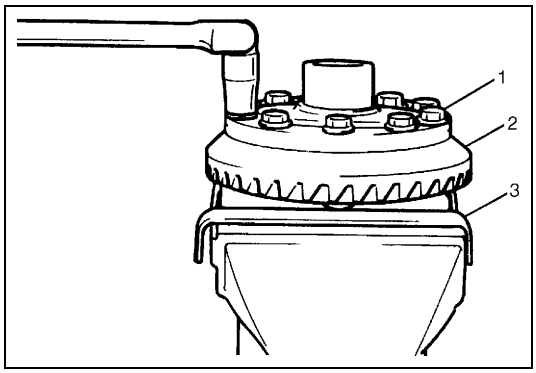

13) With aluminum plates (3) placed on vise first, grip differential case with it and remove bevel gear (2) by removing its 10 bolts (1).

CAUTION:
Use care not to hold axle lock clutch part with vise.
Be sure to hold differential left case.

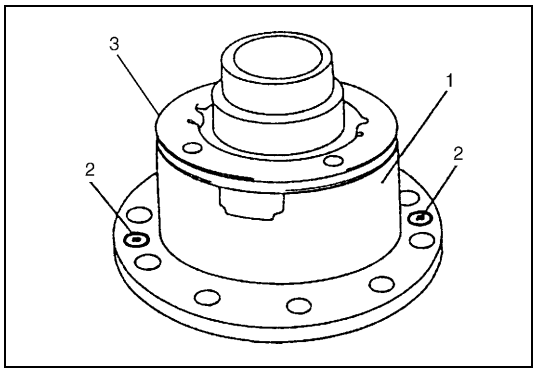

14) Separate differential case assembly by removing 2 screws (2) and take out free axle hub, side gears and shims from differential left case.

1.	Differential left case
3.	Axle lock clutch

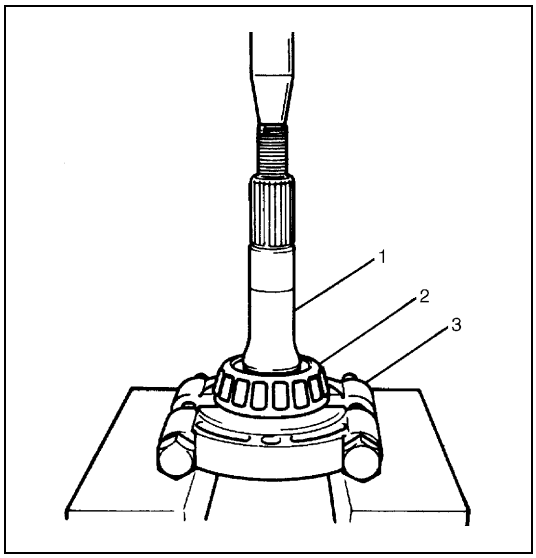

15) Remove bevel pinion front bearing (2) by using bearing puller (3) and press.

1.	Drive bevel pinion

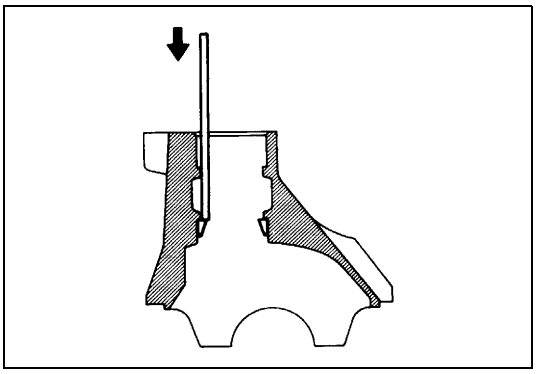

16) Drive out bevel pinion bearing outer races in differential carrier by hammering metal stick applied to them.

Components Inspection

- Check companion flange for wear or damage.
- Check bearings for wear or discoloration.
- Check differential carrier for cracks.
- Check drive bevel pinion and bevel gear for wear or cracks.
- Check side gears, pinion gears and pinion shaft for wear or damage.
- Check side gear spline for wear or damage.

Differential left case

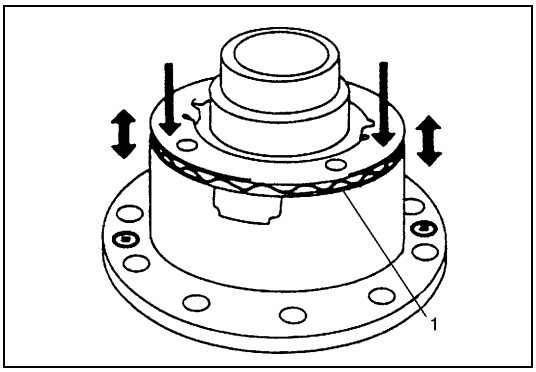

- Check clutch for smooth movement by pushing plate of axle lock clutch fitted to differential left case.
  Also, check return spring (1) for settling.

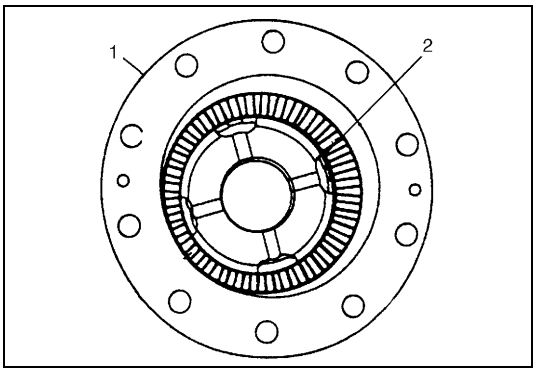

- Check teeth of axle lock clutch (2) fitted to differential right case for wear, damage and any other faulty condition.

1. Left case

Free axle hub

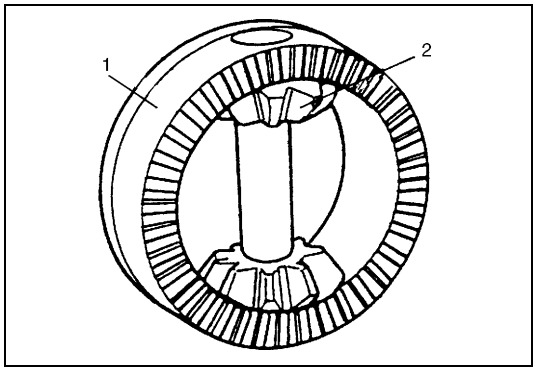

Check teeth of free axle hub (1) for wear, damage and any other faulty condition.

2. Differential pinion

Actuator

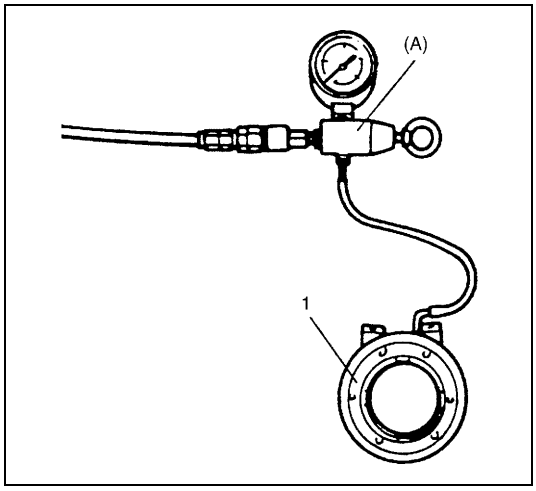

1) Connect special tool, air compressor, actuator (1) and hoses as shown in the figure.

NOTE:

Loosen adjusting screw of special tool before connecting hoses to special tool.

Special tool
(A): 09918-18110

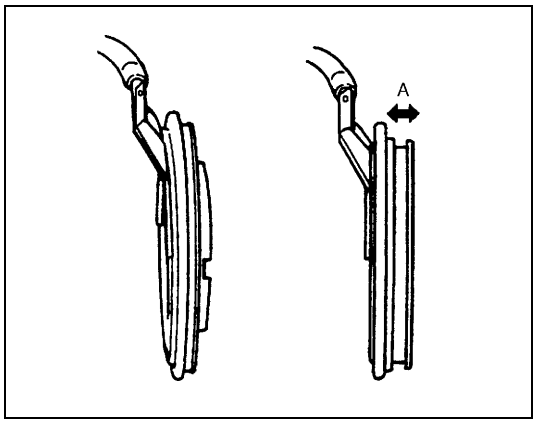

2) With pressure from compressor applied to special too, adjust pressure to specified level by turning adjusting screw of special tool and check actuator for operation.
Also, check that there is no air leakage from actuator.

Specified pressure for actuator inspection:
38.0 kPa (0.38 kg/cm^2, 5.40 psi)

Actuator stroke:
3 mm (0.118 in.)

A: When pressure applied

Subassembly Adjustment and Reassembly

Judging from faulty conditions noted before disassembly and what is found through visual check of bearing and gear tooth etc. after disassembly, prepare replacing parts and proceed to reassembly according to procedures as described below.

CAUTION:
- **Bevel gear and pinion must be replaced as a set when either replacement becomes necessary.**
- **When replacing taper roller bearing, replace as inner race & outer race assembly.**

Differential carrier

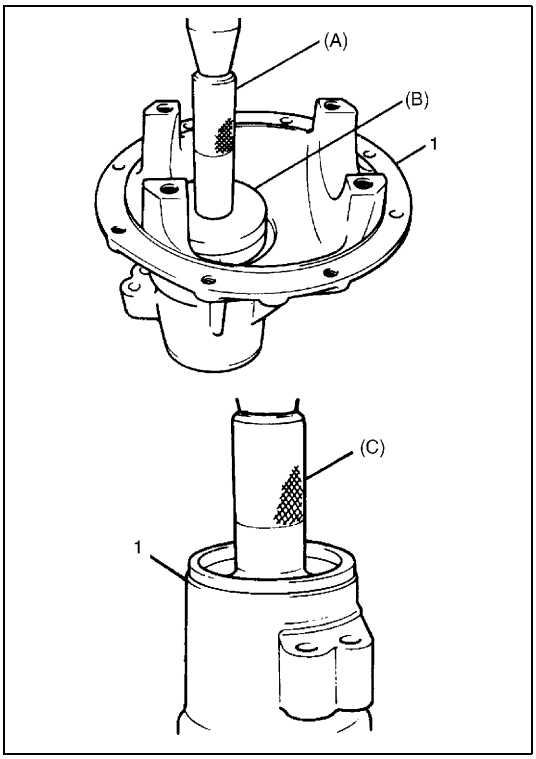

For press-fitting bevel pinion bearing outer races, use special tools as shown in the figure.

CAUTION:
Perform press-fitting carefully so as not to tilt outer race.

Special tool
(A): 09924-74510
(B): 09926-68310
(C): 09913-75510

1.	Differential carrier

Differential case

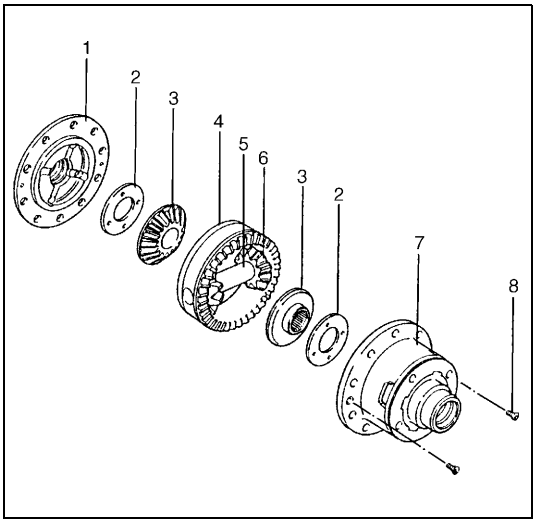

1) Install differential gears (3), free axle hub (4) and washers (2) to left case (7).
2) Install left case to right case (1) and tighten screws (8).

5.	Differential pinion shaft
6.	Differential pinion

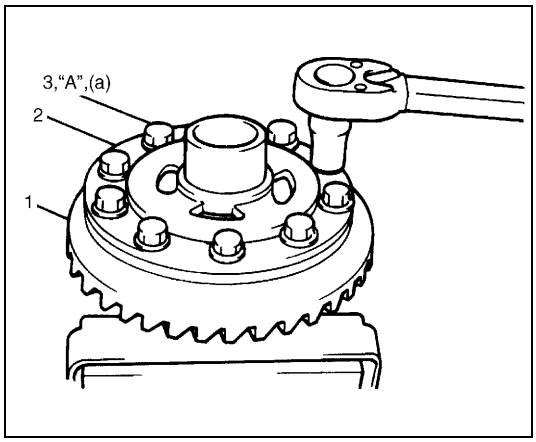

3) Put bevel gear (1) on differential case (2) and fasten them with 10 bolts (3) by tightening them to specified torque.
Use thread lock cement "A" for 10 bolts (3).

CAUTION:
Use of any other bolts than that specified is prohibited.

"A": Thread lock cement 99000-32020

Tightening torque
Drive bevel gear bolt
(a): 85 N·m (8.5 kg-m, 61.5 lb-ft)

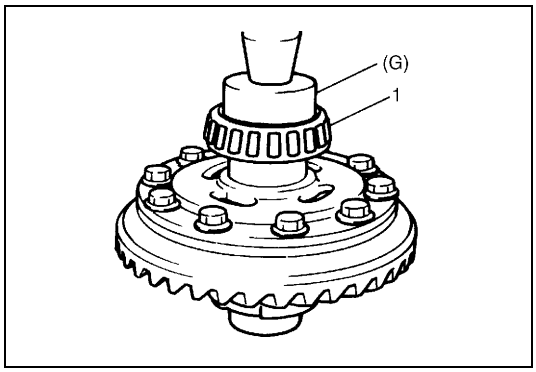

4) Press-fit side bearing (1) with special tool and press.

Special tool
(G): 09944-66020

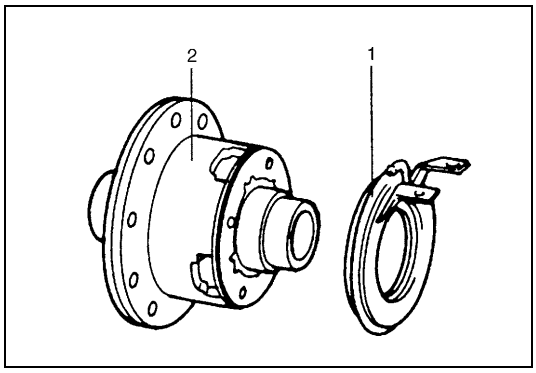

5) Install actuator (1) to differential case (2).

NOTE:
Note that installing direction is as shown in figure.

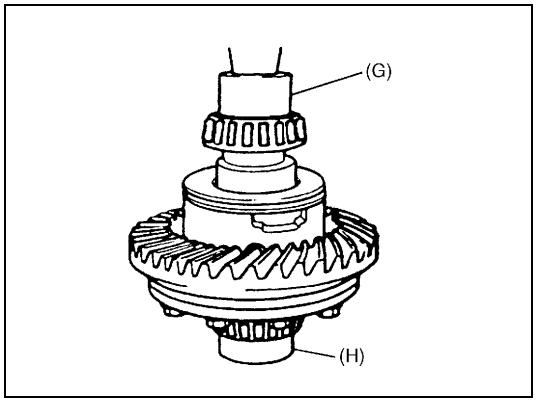

6) Hold bearing press-fitted in step 7 with holder and press-fit side bearing on the other side.

NOTE:
Be sure to use bearing holder for the purpose of protecting lower bearing.

Special tool
(G): 09944-66020
(H): 09951-16060

Drive bevel pinion

To engage bevel pinion and gear correctly, it is prerequired to install bevel pinion to differential carrier properly by using adjusting shim as described on the following. Shown in the figure are relative positions of bevel pinion, differential carrier and mounting dummy.

Special tool
(A): 09900-20606
(B): 09926-78311
(C): 09922-75222

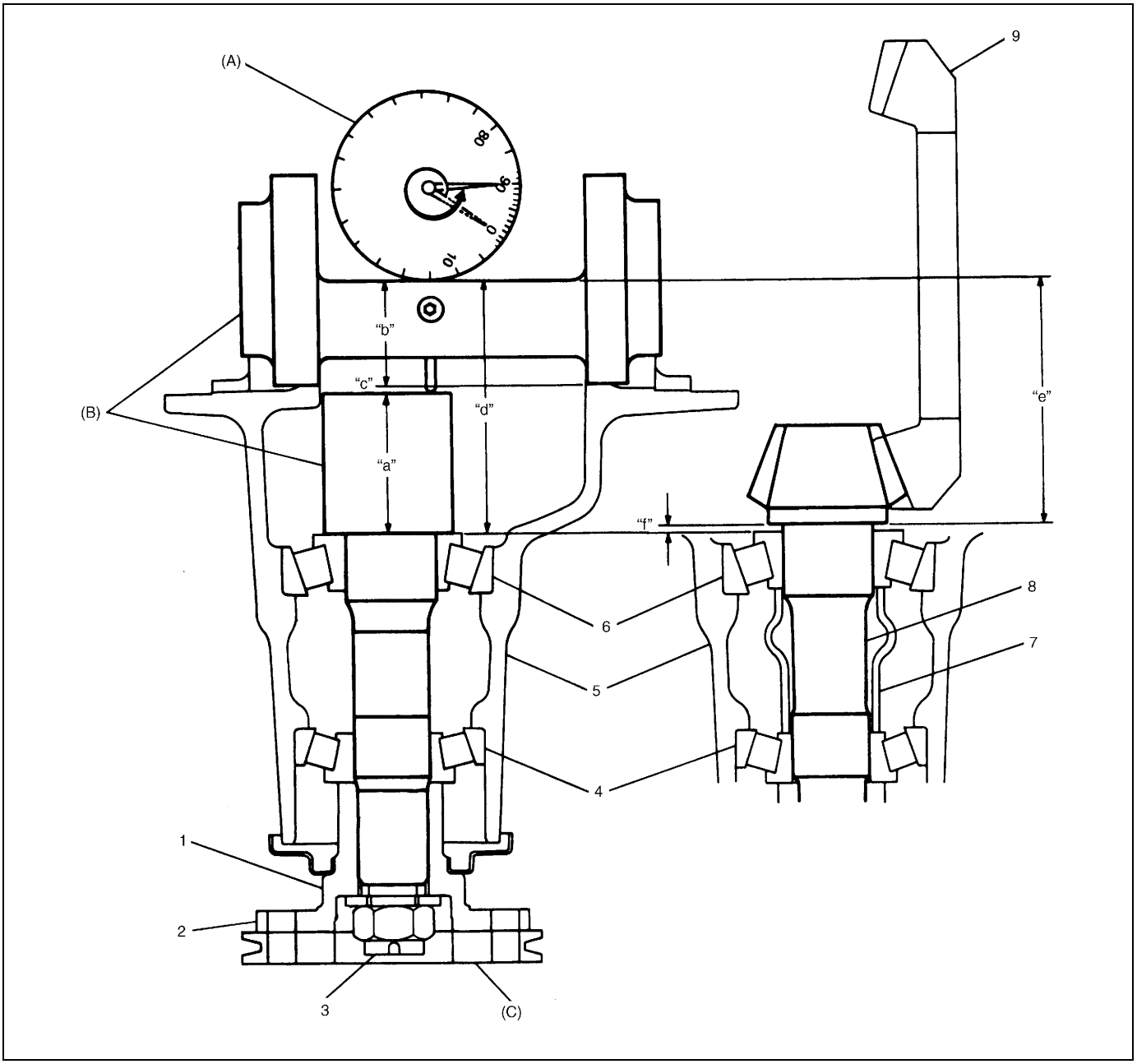

1. Universal joint flange without groove (P/No. 27110 – 60A00)	"a": Pinion dummy height
2. No groove on flange periphery	"b": Axle dummy radius
3. Nut	"a" + "b" Mounting dummy side 94.00 mm (3.70078 in.)
4. Rear bearing	"c": Measured dimension
5. Differential carrier	"d": Differential carrier mounting distance ("a" + "b" + "c")
6. Front bearing	"e": Bevel pinion mounting distance (Marked in shaft in mm)
7. Spacer	"f": Shim size for mounting distance adjustment ("d" – "e")
8. Bevel pinion	
9. Bevel gear	

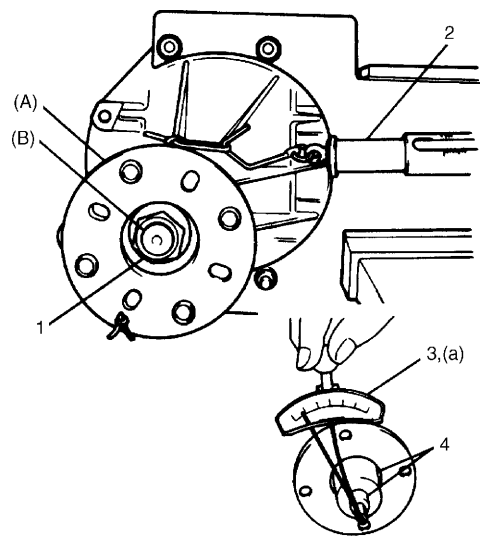

1) Install bevel pinion dummy with bearings into differential carrier and tighten flange nut (1) so that specified bearing preload is obtained.

NOTE:

- **This installation requires universal joint flange not equipped with groove on flange periphery.**
- **This installation requires no spacer or oil seal.**
- **Before taking measurement with spring balance (2) or torque wrench (3), check for rotation by hand and apply small amount of oil to bearings.**

Special tool
(A): 09922-75222
(B): 09926-78311

Pinion bearing preload
(a): 9.0 – 17.0 kg-cm (7.8 – 14.7 lb-in)

Spring measure reading:
1.8 – 3.4 kg (4.0 – 7.5 lb)

4.	Socket with adapter

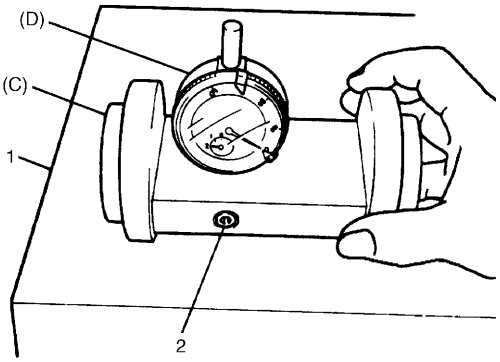

2) Set dial gauge to bevel pinion mounting dummy and make 0 (zero) adjustment on surface plate.

NOTE:

- **When setting dial gauge to mounting dummy, tighten screw lightly. Be careful not to overtighten it, which will cause damage to dial gauge.**
- **With dial gauge set, turn dummy back and force by hand a couple of times and attain accurate 0 (zero) adjustment.**
- **It is desirable that short pointer indicates beyond 2 mm when long one is at 0 (zero).**

Special tool
(C): 09926-78311
(D): 09900-20606

1.	Surface plate
2.	Screw

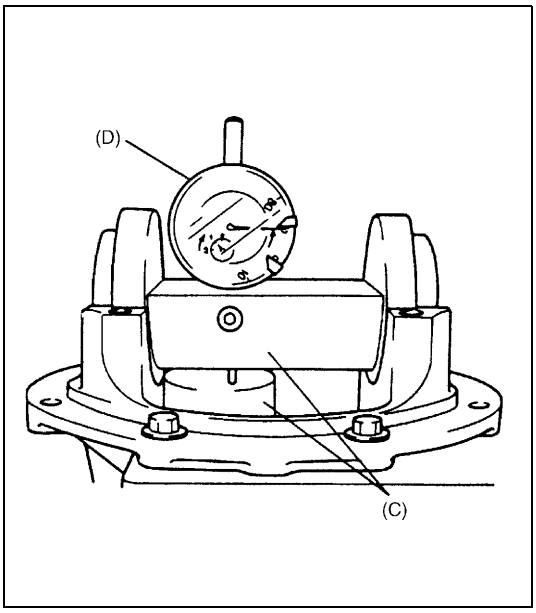

3) Place zero-adjusted mounting dummy and dial gauge set on pinion dummy and take measurement between zero position and extended dial gauge measuring tip.

NOTE:

- **Repeat turning back and force of dummy and measure distance as far as top surface of pinion dummy accurately.**
- **When dial gauge measuring tip extends from 0 (zero) position, pointer turns counterclockwise.**
- **Measured value may exceed 1 mm. Therefore, it is also necessary to know reading of short pointer.**

Special tool
(C): 09926-78311
(D): 09900-20606

4) Obtain adjusting shim thickness by using measured value by dial gauge (which represents “c” in the first figure of “Drive Bevel Pinion” in this section) in the following equation.

Necessary shim thickness “f”	=	94	+	Dial gauge measured value “c”	–	Measurement printed on pinion “e”

94 in above equation is “a” + “b” of mounting dummy (special tool) as shown in the first figure of “Drive Bevel Pinion” in this section.

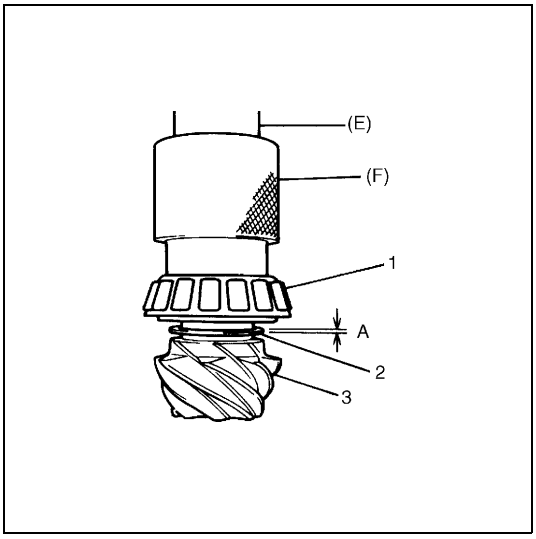

5) Select adjusting shim(s) (2) closest to calculated value from among the following available sizes and put it in place and then press-fit front bearing (1).

Special tool
(E): 09925-18011
(F): 09927-66010

Available shim thickness
1.12, 1.15, 1.18, 1.21, 1.24, 1.27, 1.30 and 0.3 mm (0.044, 0.045, 0.046, 0.047, 0.048, 0.049, 0.050 and 0.012 in.)

3.	Bevel pinion
A:	Closest value to “f” (calculated)

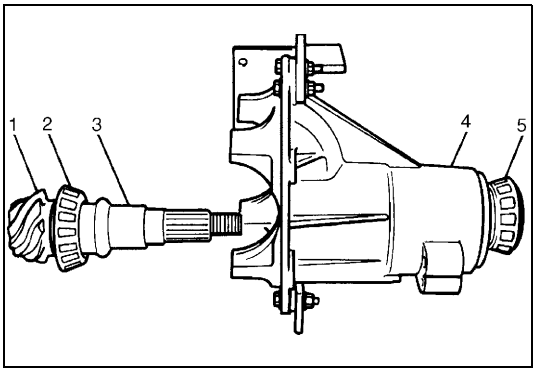

6) With new pinion spacer (3) inserted as shown in the figure, install rear bearing (5) to differential carrier (4).

NOTE:

- **Make sure to use new spacer for reinstallation.**
- **Apply oil to bearings.**

1.	Bevel pinion
2.	Front bearing

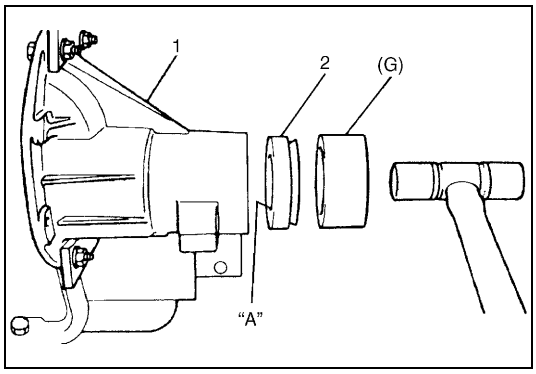

7) Using special tool and plastic hammer drive oil seal (2) into differential carrier (1) till it becomes flush with carrier end. Then apply grease "A" to oil seal lip.

Special tool
(G): 09951-18210

"A": Grease 99000-25010

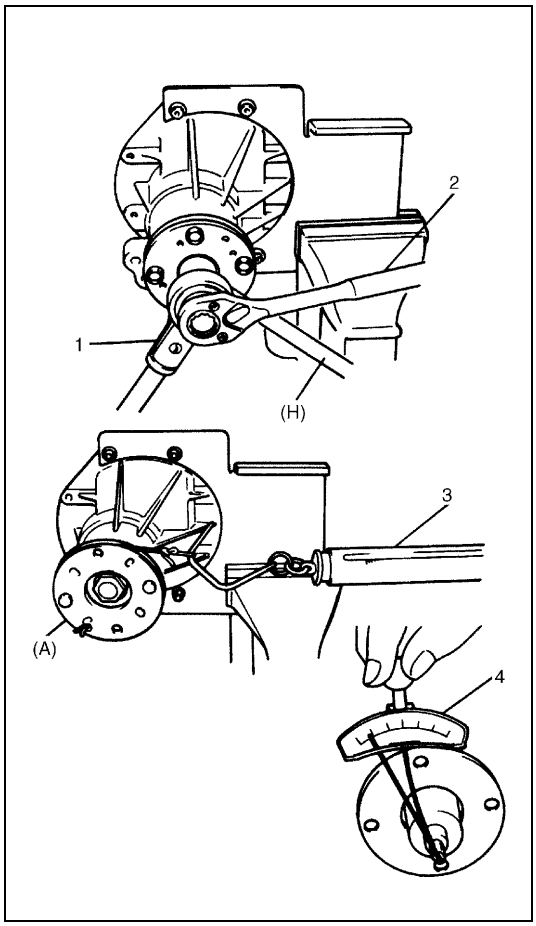

8) While tightening flange nut gradually with flange holder (special tool) and power wrench (4 – 10 magnification) (1), set preload of pinion to specification.

NOTE:

- **Before taking measurement with spring balance (3) or torque wrench (4), check for smooth rotation by hand.**
- **Bearing preload can be measured roughly by pinion rotating angle which is due to arm weight of flange holder installed in flange.**
  Refer to following page for further information.
- **Be sure to tighten gradually and carefully till specified starting torque is obtained. Turning back overtightened flange nuts should be avoided.**

Pinion bearing preload:
9.0 – 17.0 kg-cm (7.8 – 14.7 lb-in.)

Spring measure reading:
1.8 – 3.4 kg (4.0 – 7.5 lb)

Special tool
(A): 09922-75222
(H): 09922-66020

2. Socket wrench

Assembly Unit

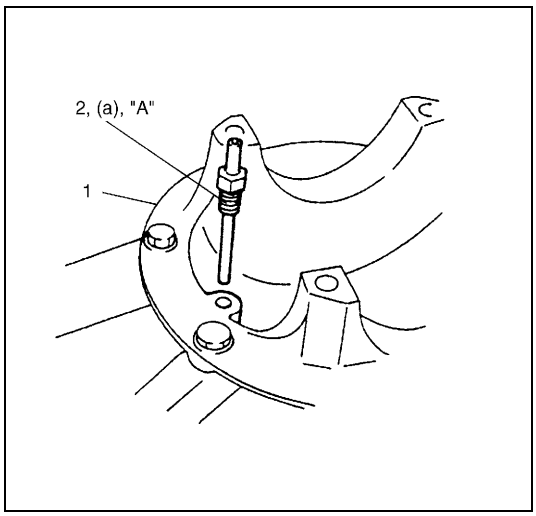

1) Apply sealant "A" to thread part of air inlet union (2) and install it to differential carrier (1). Tighten it to specified torque.

"A": Sealant 99000-31110

Tightening torque
Air inlet union
(a): 13 N·m (1.3 kg-m, 9.5 lb-ft)

2) Place bearing outer races on their respective bearings. Used left and right outer races are not interchangeable and install case assembly in carrier.
3) Install side bearing adjusters on their respective carrier, making sure adjusters are threaded properly.

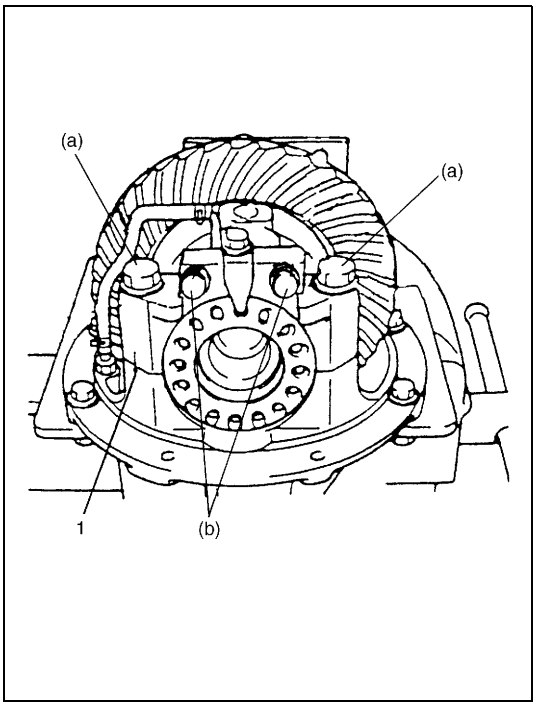

4) Align match marks (1) on cap and carrier. Screw in 2 side bearing cap bolts 2 or 3 turns and press down bearing cap by hand.

NOTE:

If bearing cap does not fit tightly on carrier, side bearing adjuster is not threaded properly. Reinstall adjuster.

5) Tighten cap bolts to provisional torque below.

Tightening torque
Side bearing cap bolt (provisional torque)
(a): 15 N·m (1.5 kg-m, 11.0 lb-ft)

6) Install actuator bracket to bearing cap and tighten its bolts to specification.

Tightening torque
Actuator bracket bolt
(b): 12 N·m (1.2 kg-m, 8.5 lb-ft)

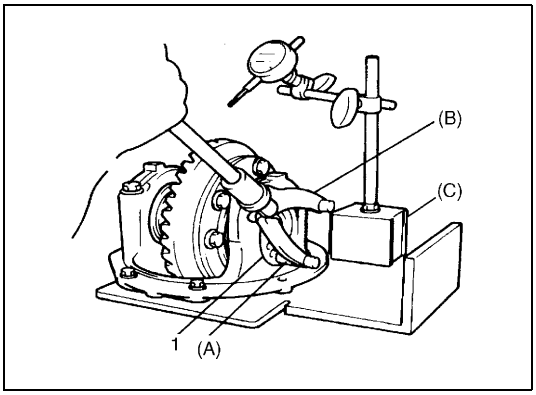

7) Tighten both bearing adjusters (1) so as to obtain specified gear backlash and at the same time, obtain preload of side bearing.

Special tool
(A): 09930-40120 (Attachment)
(B): 09930-40113 (Rotor holder)
(C): 09900-20701

Bevel gear backlash:
0.13 – 0.18 mm (0.005 – 0.007 in.)

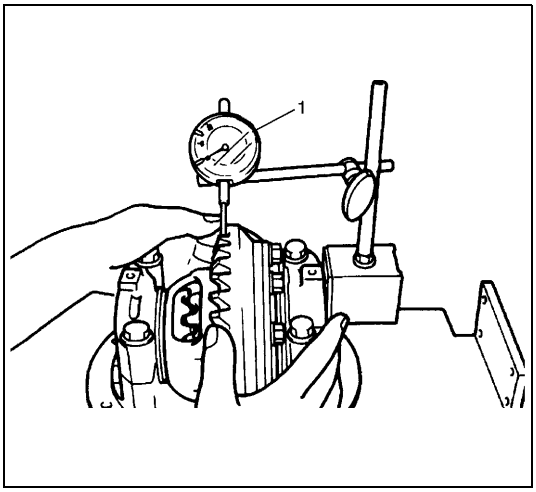

NOTE:

- **Be sure to apply measuring tip of dial gauge (1) at right angles to convex side of tooth.**
- **Measure at least 4 points on drive bevel gear periphery.**
- **As a practical measure the following would be recommended to obtain specified backlash and side bearing preload at the same time.**

a) Obtain specified backlash by turning both adjusters inward lightly.
b) Tighten both adjusters further by one notch at a time.

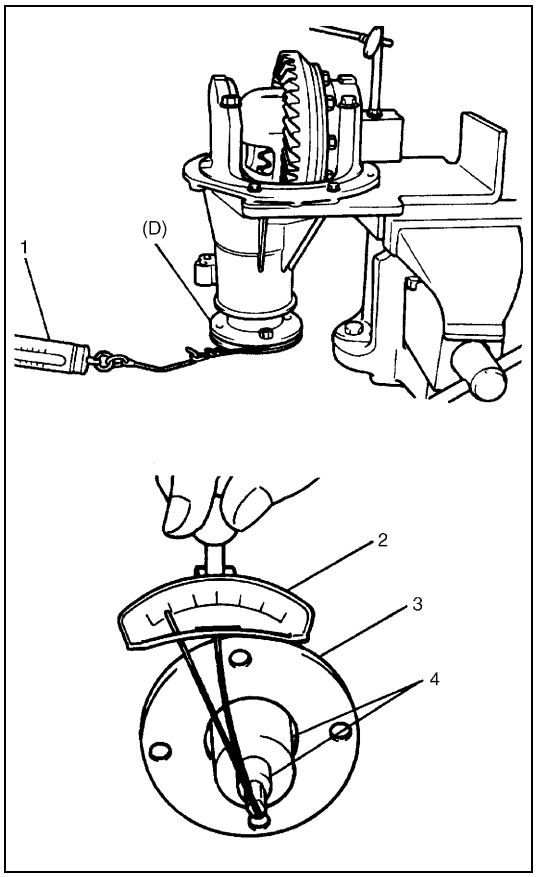

8) Measure preload of pinion with spring balance (1) or torque wrench (2) and check composite preload of pinion bearing and side bearing.

Special tool
(D): 09922-75222

NOTE:

Standard preload is shown in the graph, which should be read as follows.
Example:
When preload of bevel pinion is 2.6 kg/5.73 lb, acceptable composite preload of both pinion bearings and side bearings should be between 2.8 and 3.2 kg/6.17 and 7.05 lb.

3.	Universal joint flange
4.	Socket with adapter

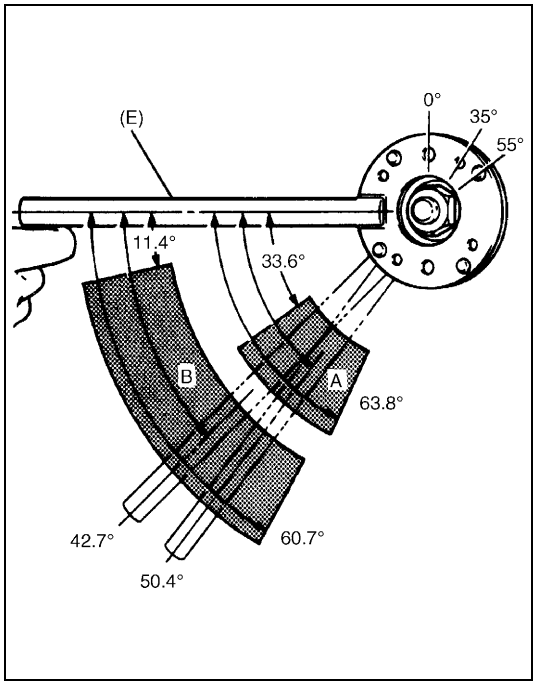

NOTE:

Bearing preload can be checked roughly by using flange holder as shown in the figure. In this measurement, holder arm itself will work as balance weight and torque will be replaced with angle. However, flange should be rotated very slowly with hand support so as not to allow over revolution due to inertia.

Special tool
(E): 09922-66020

"A":	Pinion bearing starting torque range
"B":	Pinion bearing plus side bearing starting torque range

NOTE:

Repeat side bearing adjustment until gear backlash and composite bearing preload are compatible within specification, if fail to obtain specified measurements first.

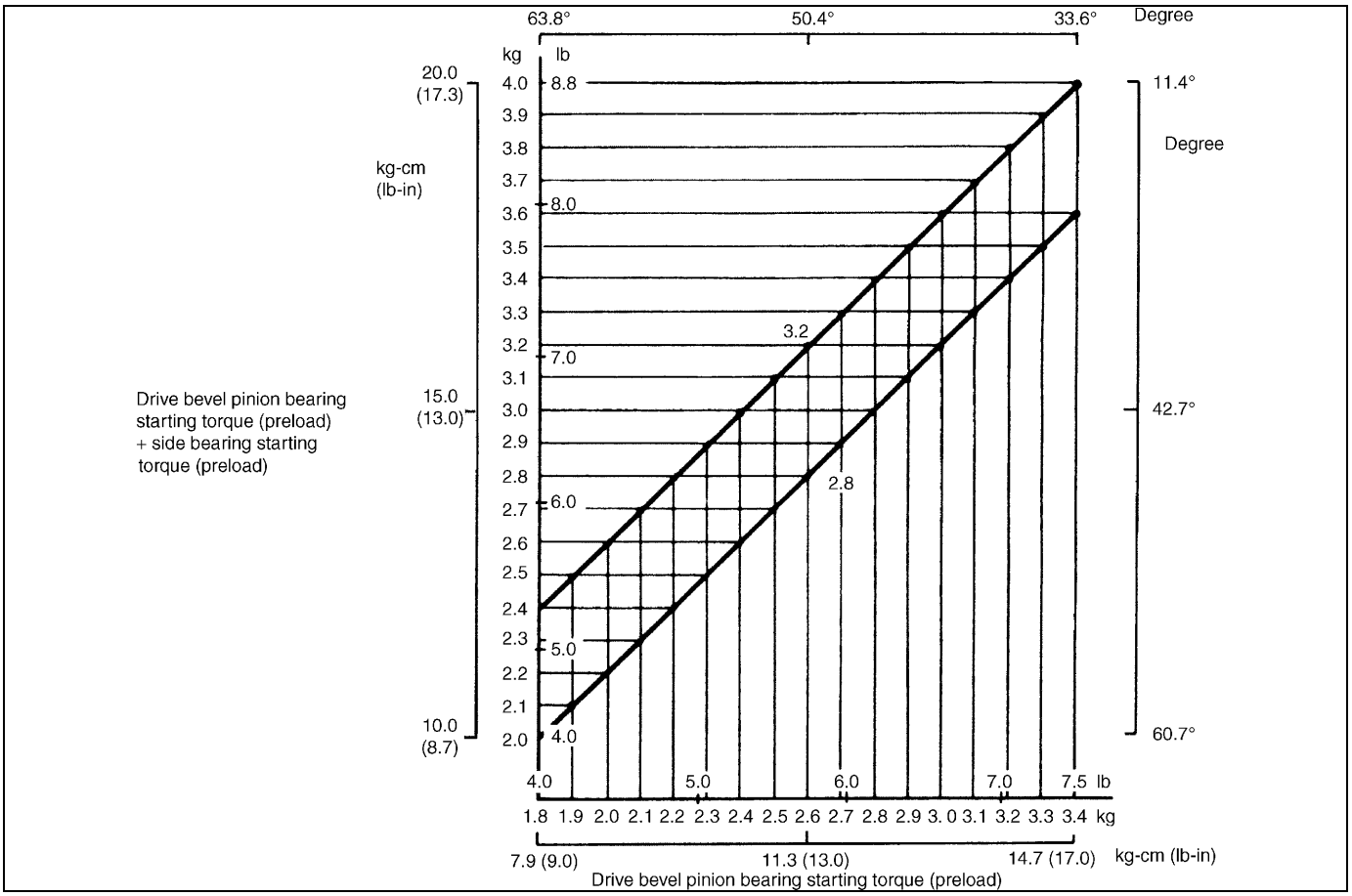

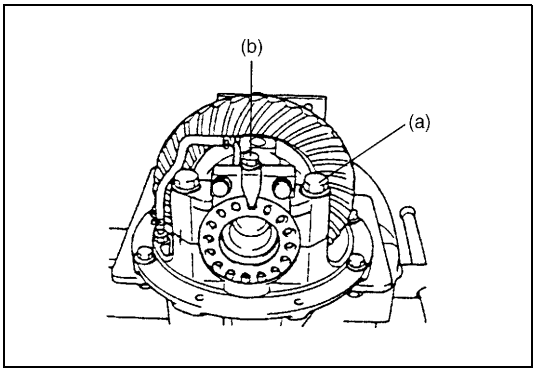

9) Torque bearing cap bolts to specification and install bearing lock plates.

Tightening torque
Bearing cap bolt
(a): 60 N·m (6.0 kg-m, 43.5 lb-ft)
Lock plate bolt
(b): 13 N·m (1.3 kg-m, 9.5 lb-ft)

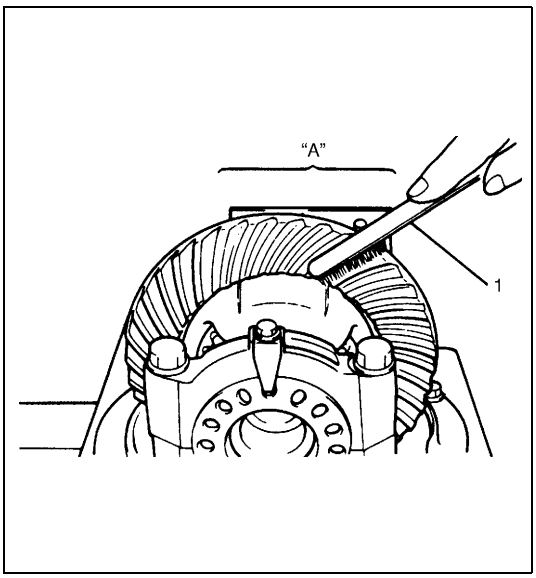

10) As final step, check gear tooth contact as the follows.
   a) After cleaning tooth surface of 10 bevel gears, paint them with gear marking compound evenly by using brush or sponge etc.
   b) Turn gear to bring its painted part in mesh with bevel pinion and turn it back and forth by hand to repeat their contact.
   c) Bring painted part up and check contact pattern, referring to the following table. If contact pattern is not normal, readjust or replace as necessary according to instruction in chart.

NOTE:

Be careful not to turn bevel gear more than one full revolution, for it will hinder accurate check.

1.	Brush
"A":	Paint gear marking compound evenly

TOOTH CONTACT PATTERN	DIAGNOSIS AND REMEDY
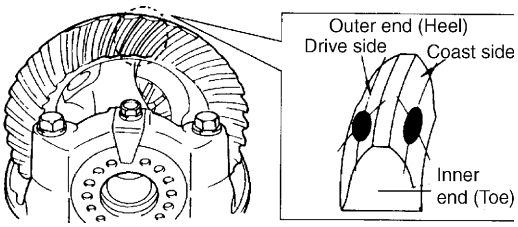	NORMAL
	HIGH CONTACT Pinion is positioned too far from the center of driver bevel gear. 1) Increase thickness of pinion height adjusting shim and position pinion closer to gear center. 2) Adjust drive bevel gear backlash to specification. 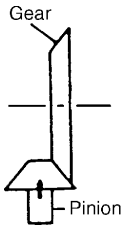
	LOW CONTACT Pinion is positioned too close to the center of drive bevel gear. 1) Decrease thickness of pinion height adjusting shim and position pinion farther from gear center. 2) Adjust drive bevel gear backlash to specification. 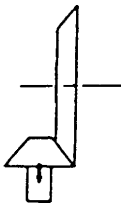
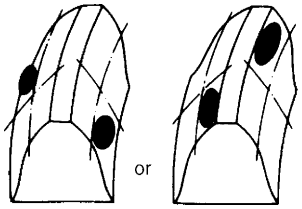	If adjustment is impossible, replace differential carrier.
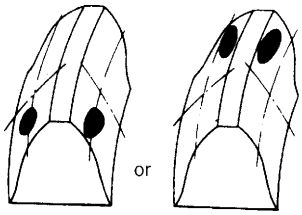	1) Check seating of bevel gear or differential case. (Check bevel gear for runout). 2) If adjustment is impossible, replace drive bevel gear & pinion set or differential carrier.
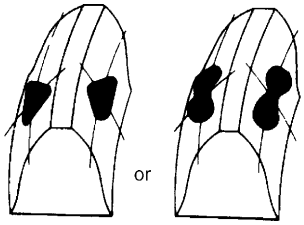	Replace drive bevel gear & pinion set or differential case.

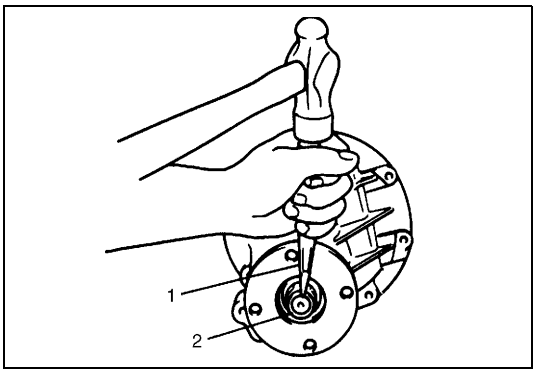

11) Upon completion of gear tooth contact check in step 9), caulk flange nut (2) with caulking tool (1) and hammer.

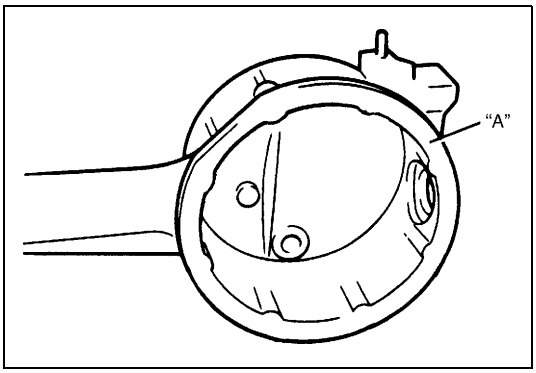

12) Clean mating surfaces of both housing and carrier and apply sealant "A" to housing side evenly.

"A": Sealant 99000-31110

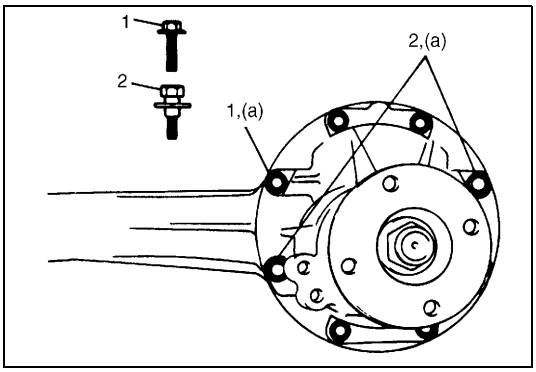

13) With differential assembly installed in housing, position it with 2 reamer bolts (2) and then install other 6 bolts (1).
14) Torque all bolts to specification.

Tightening torque
Differential carrier bolt
(a): 23 N·m (2.3 kg-m, 17.0 lb-ft)

15) Install front drive shaft.

Tightening Torque Specification

Fastening part	Tightening torque		
	N•m	kg-m	lb-ft
Air inlet union	13	1.3	9.5
Actuator bracket bolts	12	1.2	9.0
Bevel gear bolts	85	8.5	61.5
Bearing cap bolts	60	6.0	43.5
Lock plate bolts	13	1.3	9.5
Front differential carrier bolts	23	2.3	17.0

Required Service Material

Material	Recommended SUZUKI product (Part Number)	Use
Thread lock cement	THREAD LOCK CEMENT SUPER 1333B (99000-32020)	Bevel gear bolts
Lithium grease	SUZUKI SUPER GREASE A (99000-25010)	Oil seal lips
Sealant	SUZUKI BOND NO. 1215 (99000-31110)	• Front differential drain and filler plug • Mating surface of differential housing • Air inlet union

Special Tool

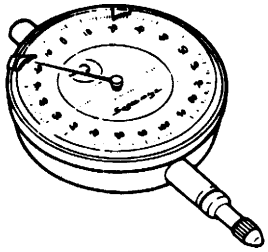 09900-20606 Dial gauge	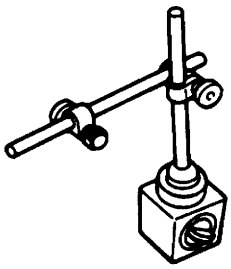 09900-20701 Magnetic stand	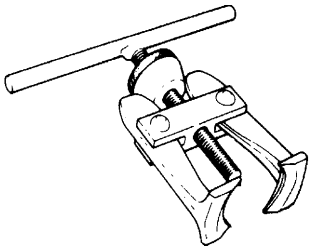 09913-61510 Bearing puller	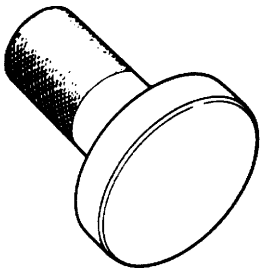 09913-75510 Bearing installer
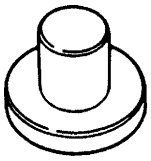 09913-85230 Bearing removing jig	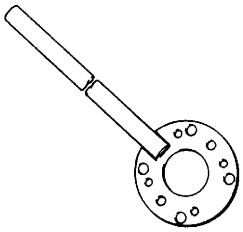 09922-66020 Flange holder	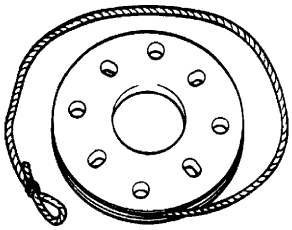 09922-75222 Preload adjuster	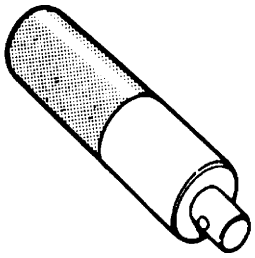 09924-74510 Installer attachment
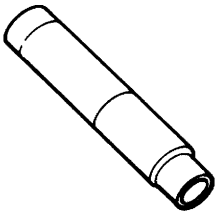 09925-18011 Bearing installer	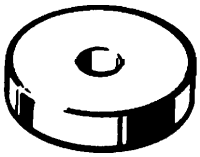 09926-68310 Bearing installer	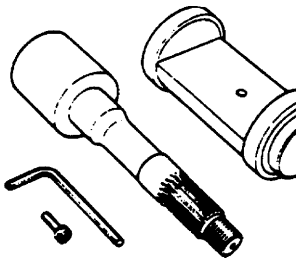 09926-78311 Bevel pinion mounting dummy	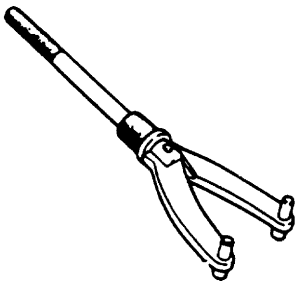 09930-40113 Rotor holder

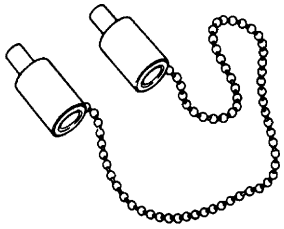 09930-40120 Attachment	 09927-66010/J23082-01 Oil pump aligner	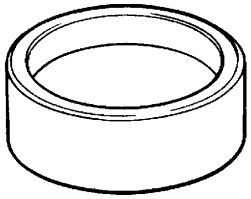 09944-66020 Bearing installer	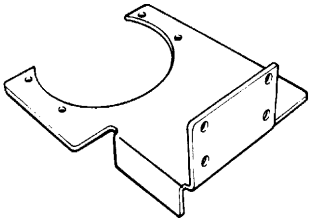 09944-76010 Differential carrier holder
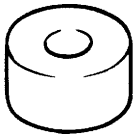 09951-16060 Lower arm bush remover	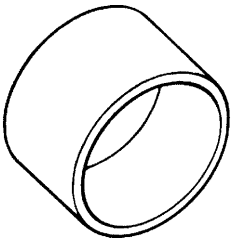 09951-18210 Oil seal remover & installer No. 2	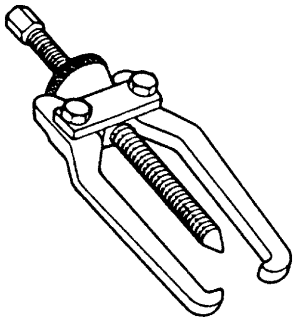 09913-65135 Bearing puller	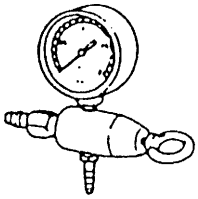 09918-18110 Air pressure regulator

SECTION 7E1

DIFFERENTIAL (FRONT) (MOTOR-SHIFTING TYPE)

CONTENTS

General Description

Component

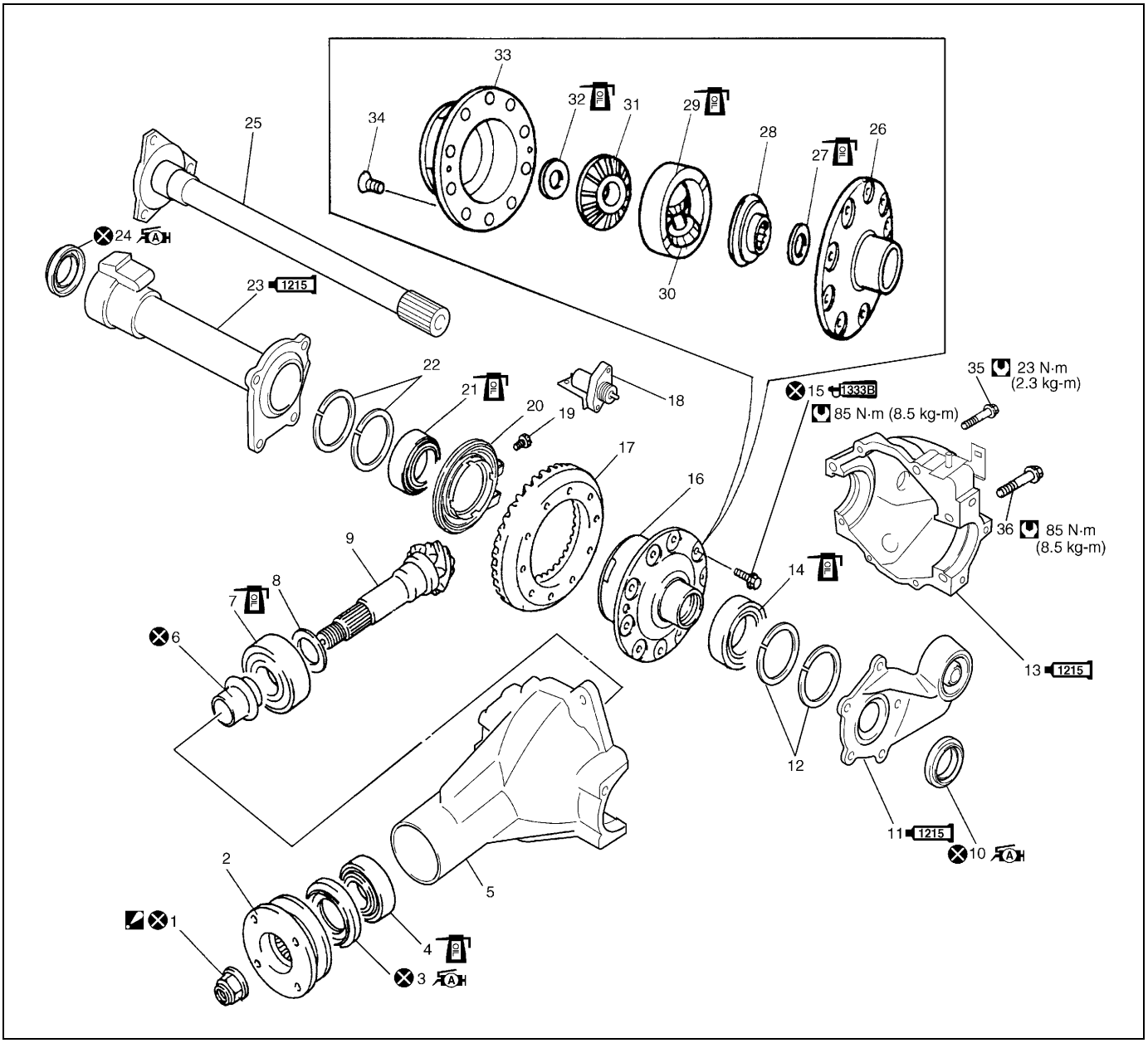

1. Flange nut: After tightening nut so as rotation torque of bevel pinion shaft to be in specified value, caulk nut securely.	14. Differential side bearing	27. Thrust washer
2. Universal joint flange	15. Bevel gear bolt: Apply thread lock cement 99000-32020 to thread part of bolt.	28. Differential gear
3. Oil seal: Apply grease 99000-25010 to oil seal lip.	16. Differential case assembly	29. Free axle hub
4. Rear bearing	17. Bevel gear	30. Differential pinion
5. Differential carrier	18. Axle lock actuator motor	31. Differential gear
6. Bearing pinion spacer	19. Bolt	32. Thrust washer
7. Front bearing	20. Axle lock actuator	33. Differential left case
8. Shim	21. Differential side bearing	34. Screw
9. Pinion	22. Shim	35. Differential carrier cover bolt
10. Oil seal: Apply grease 99000-25010 to oil seal lip.	23. Front drive shaft case Apply sealant 99000-31110 to mating surface to differential carrier	36. Differential carrier cover bolt
11. Front bracket R Apply sealant 99000-31110 to mating surface to differential carrier	24. Oil seal: Apply grease 99000-25010 to oil seal lip.	Tightening torque

	12. Shim	25. Front drive shaft	Do not reuse.
1215	13. Differential carrier cover Apply sealant 99000-31110 to mating surface to differential carrier	26. Differential right case	Apply differential oil.

Unit Repair

Disassembly Unit

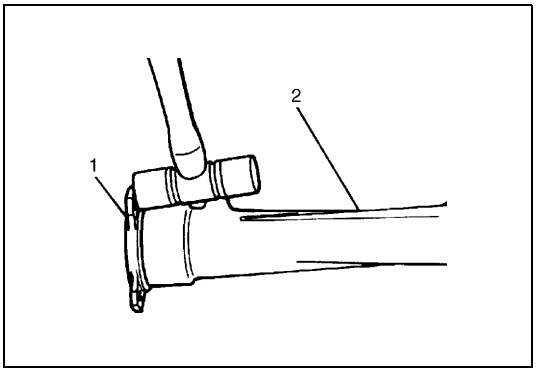

1) Remove front drive shaft (1) from front drive shaft case (2) by using plastic hammer.

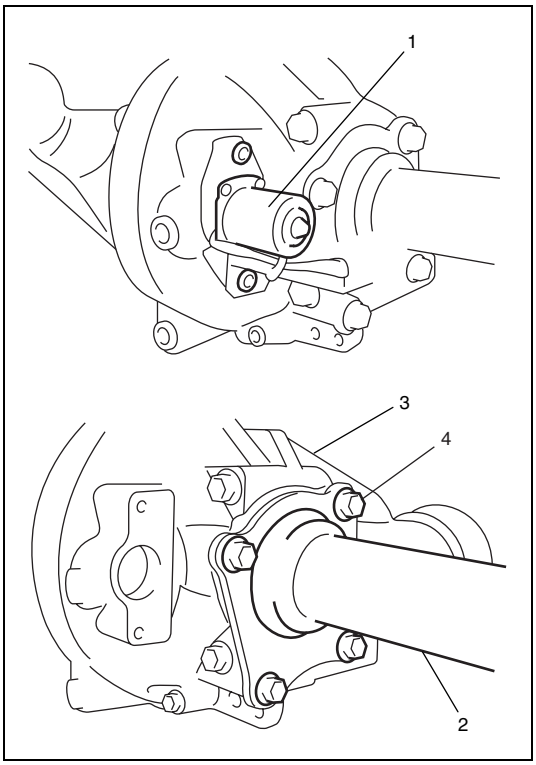

2) Remove axle lock actuator motor (1) and front drive shaft case (2) from differential housing (3) by removing bolts.

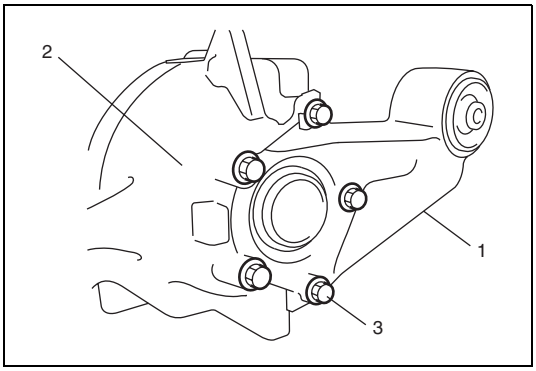

3) Remove front mounting bracket R (1) from differential housing (2) by removing bolts (3).

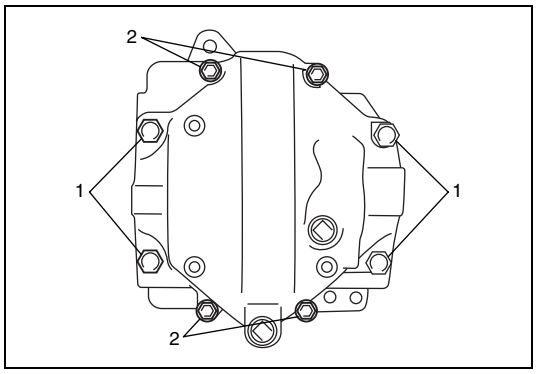

4) Remove 8 bolts (1, 2) and differential carrier cover for differential carrier.

NOTE:

Loosen 8 mm thread diameter bolts (2) first, and then loosen 12 mm thread diameter bolts (1).

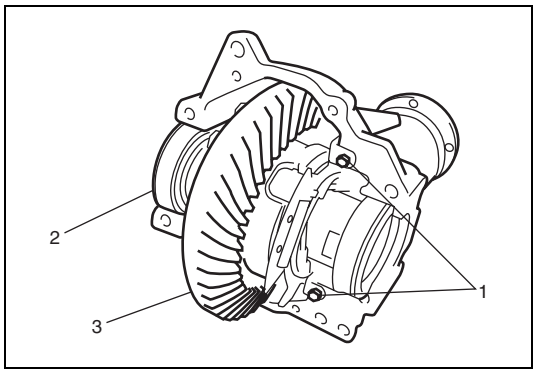

5) Remove axle lock actuator mounting bolts (1).
6) Take off differential side bearing outer races (2) and bevel gear with differential case (3).

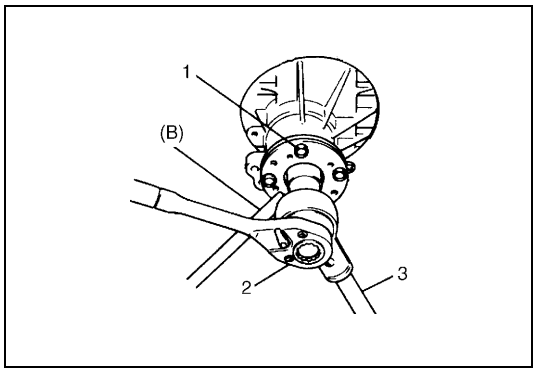

7) Hold universal joint flange with special tool and then remove flange nut by using socket wrench (2) and power wrench (3).

Special tool
(B): 09922-66021

1. Bolt

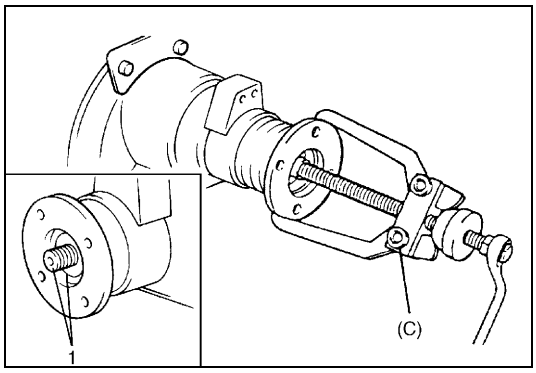

8) Make mating marks (1) on pinion and universal joint flange.

CAUTION:
Don't make mating mark on the coupling surface of the flange.

9) Remove universal joint flange from pinion using special tool.

Special tool
(C): 09913-65135

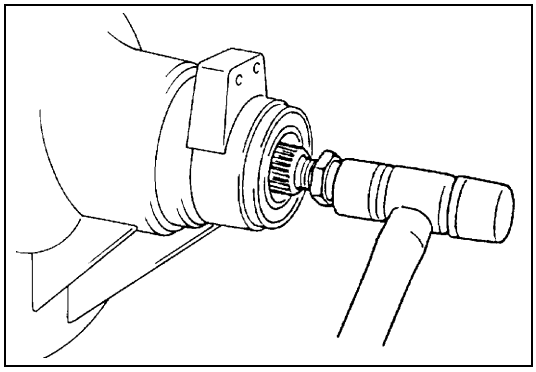

10) Remove bevel pinion with front bearing, and spacer from carrier.
If it is hard to remove, screw an used nut into pinion and hammer on that nut with a plastic hammer but never directly on pinion.

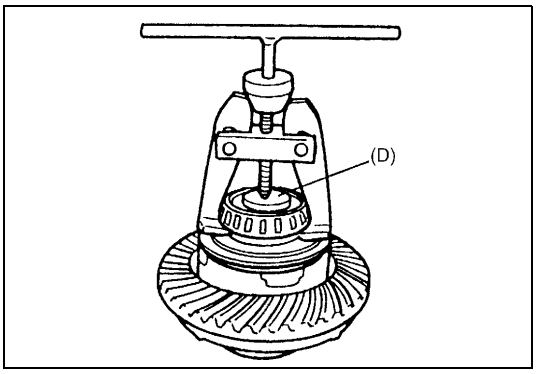

11) Remove oil seal and take out rear bearing.
12) Using special tools, pull out differential side bearings.

Special tool
(D): 09913-85230

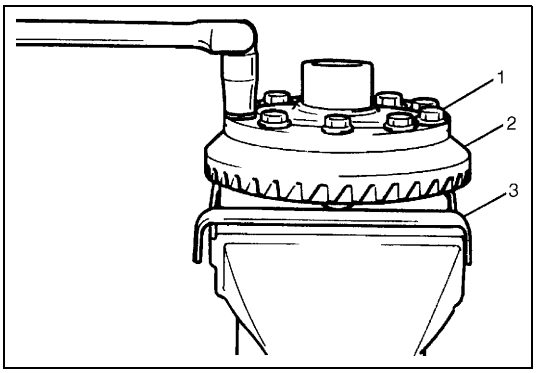

13) With aluminum plates (3) placed on vise first, grip differential case with it and remove bevel gear (2) by removing its 10 bolts (1).

CAUTION:
Use care not to hold axle lock clutch part with vise.
Be sure to hold differential left case.

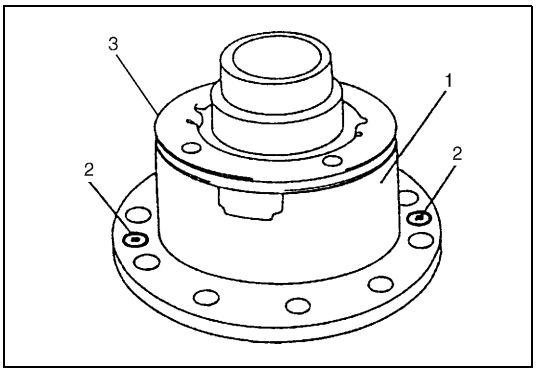

14) Separate differential case assembly by removing 2 screws (2) and take out free axle hub, side gears and shims from differential left case (1).

3. Axle lock clutch

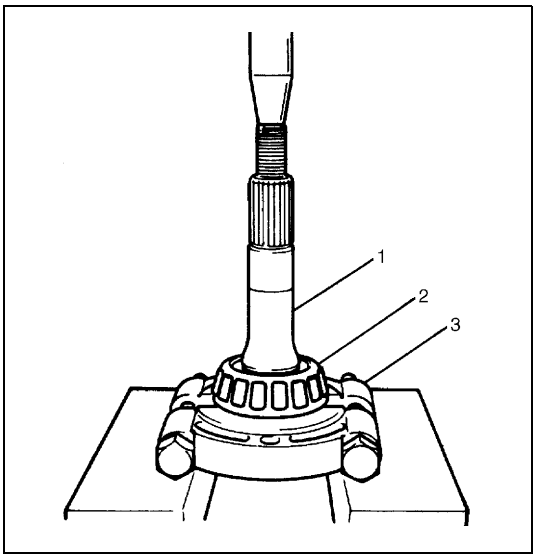

15) Remove front bearing (2) from pinion (1) by using bearing puller (3) and hydraulic press.

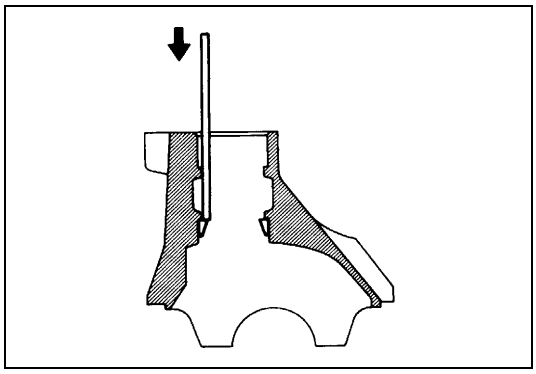

16) Drive out bevel pinion bearing outer races in differential carrier by hammering metal stick applied to them.

Components Inspection

- Check universal joint flange for wear or damage.
- Check bearings for wear or discoloration.
- Check differential carrier for cracks.
- Check pinion and bevel gear for wear or cracks.
- Check differential side gears, differential pinion gears and pinion shaft for wear or damage.
- Check differential side gear spline for wear or damage.

Differential left case

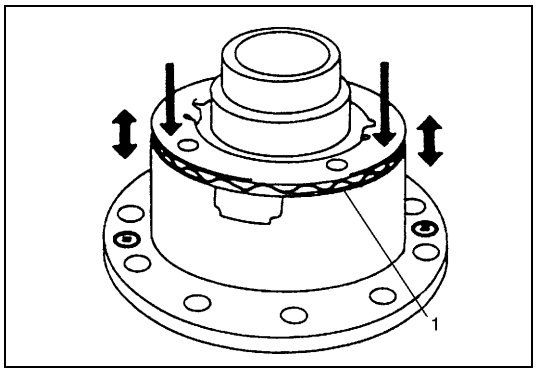

- Check clutch for smooth movement by pushing plate of axle lock clutch fitted to differential left case.
  Also, check return spring (1) for settling.

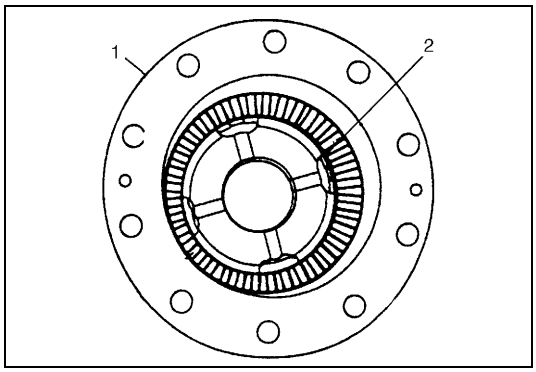

- Check teeth of axle lock clutch (2) fitted to differential left case for wear, damage and any other faulty condition.

1. Left case

Free axle hub

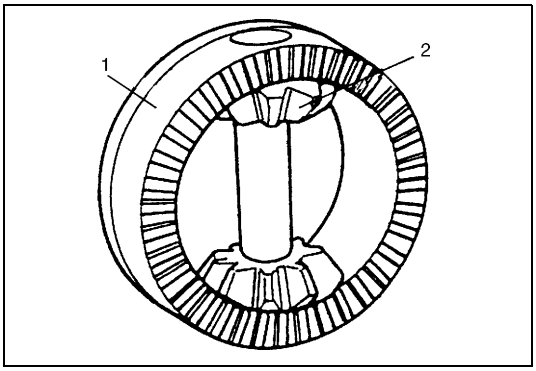

Check teeth of free axle hub (1) for wear, damage and any other faulty condition.

2. Differential pinion

Actuator

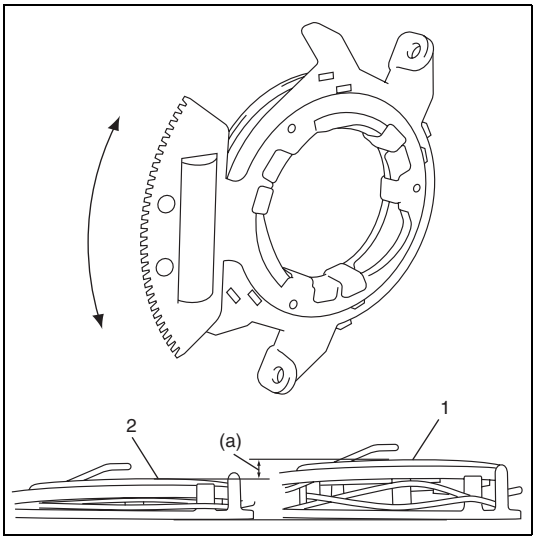

Check if the gear of the axle lock actuator moves smoothly and the actuator expands (1) and contracts (2) by hand.

Actuator stroke:
(a): 3 mm (0.12 in.)

Subassembly Adjustment and Reassembly

Judging from faulty conditions noted before disassembly and what is found through visual check of bearing and gear tooth etc. after disassembly, prepare replacing parts and proceed to reassembly according to procedures as described below.

CAUTION:
- **Bevel gear and pinion must be replaced as a set even if either one of them has to be replaced.**
- **When replacing taper roller bearing, replace as inner race & outer race assembly.**

Differential carrier

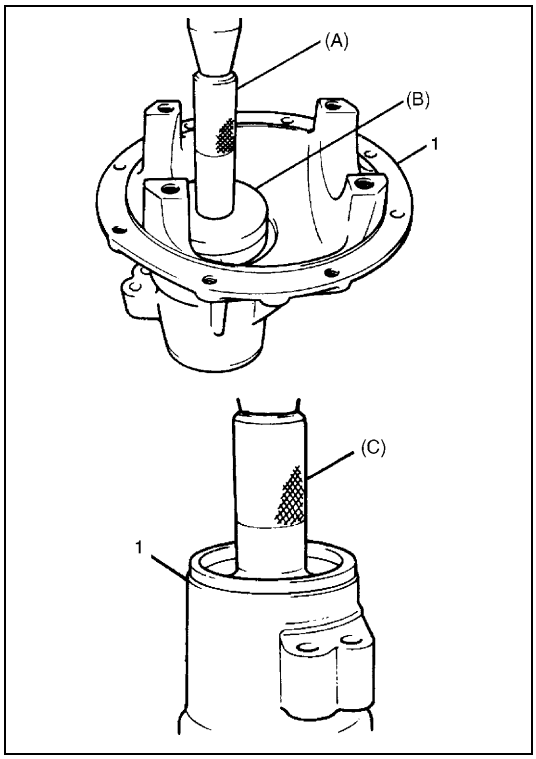

For press-fitting pinion bearing outer races, use special tools as shown in the figure.

CAUTION:
Press-fit pinion bearing outer races carefully so as not to tilt outer race.

Special tool
(A): 09924-74510
(B): 09926-68310
(C): 09913-75510

1.	Differential carrier

Differential case

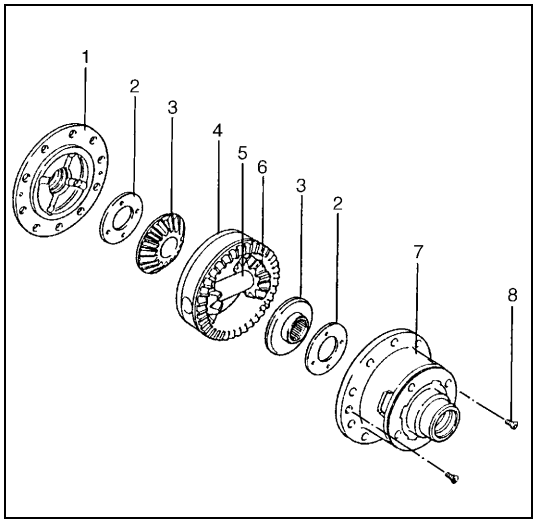

1) Install differential gears (3), free axle hub (4) and thrust washers (2) to differential left case (7).
2) Install differential left case to differential right case (1) and tighten screws (8).

5.	Differential pinion shaft
6.	Differential pinion

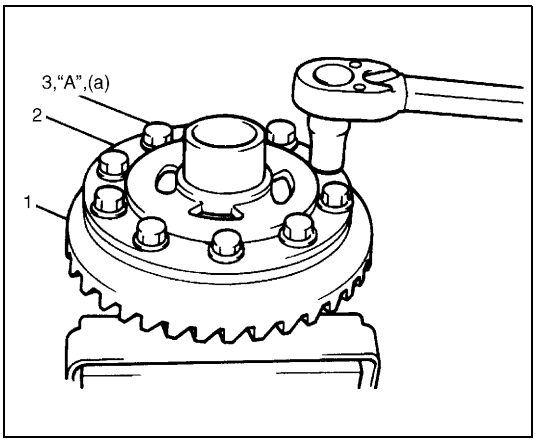

3) Put bevel gear (1) on differential case (2) and fasten them with 10 bolts (3) by tightening them to specified torque.
Use thread lock cement "A" for 10 bolts (3).

CAUTION:
Use of any other bolts than that specified is prohibited.

"A": Thread lock cement 99000-32020

Tightening torque
Drive bevel gear bolt
(a): 85 N·m (8.5 kg-m, 61.5 lb-ft)

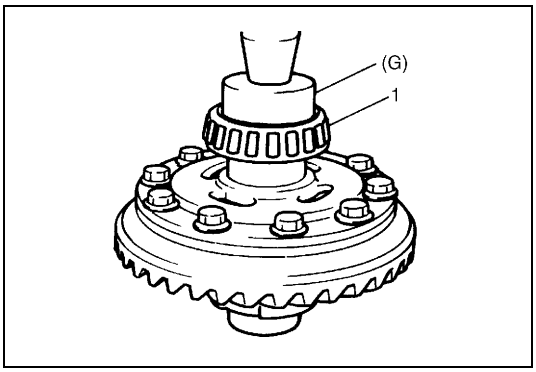

4) Press-fit differential side bearing (1) with special tool and hydraulic press.

Special tool
(G): 09944-66020

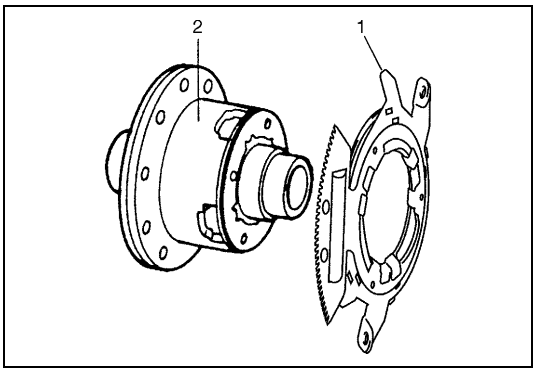

5) Install axle lock actuator (1) to differential case (2) temporarily.

NOTE:
Note that installing direction is as shown in the figure.

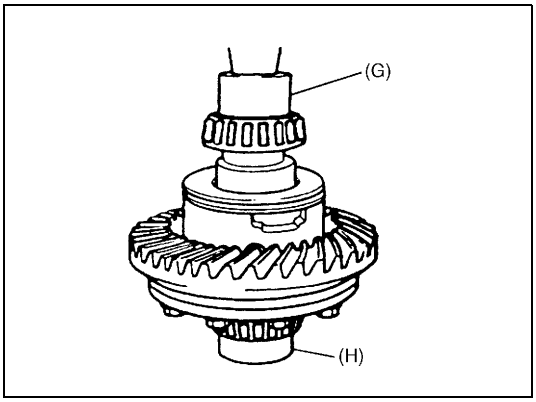

6) Hold bearing press-fitted in step 4 with holder (special tool (H)) and press-fit side bearing on the other side.

NOTE:
Be sure to use bearing holder (special tool (H)) for the purpose of protecting lower bearing.

Special tool
(G): 09944-66020
(H): 09951-16060

Drive bevel pinion

To engage bevel pinion and gear correctly, it is prerequired to install bevel pinion to differential carrier properly by using adjusting shim as described on the following. Shown in the figure are relative positions of bevel pinion, differential carrier and mounting dummy.

Special tool
(A): 09900-20607
(B): 09926-78320
(C): 09922-75222
(D): 09926-78311
(E): 09922-76570
(F): 09951-46010

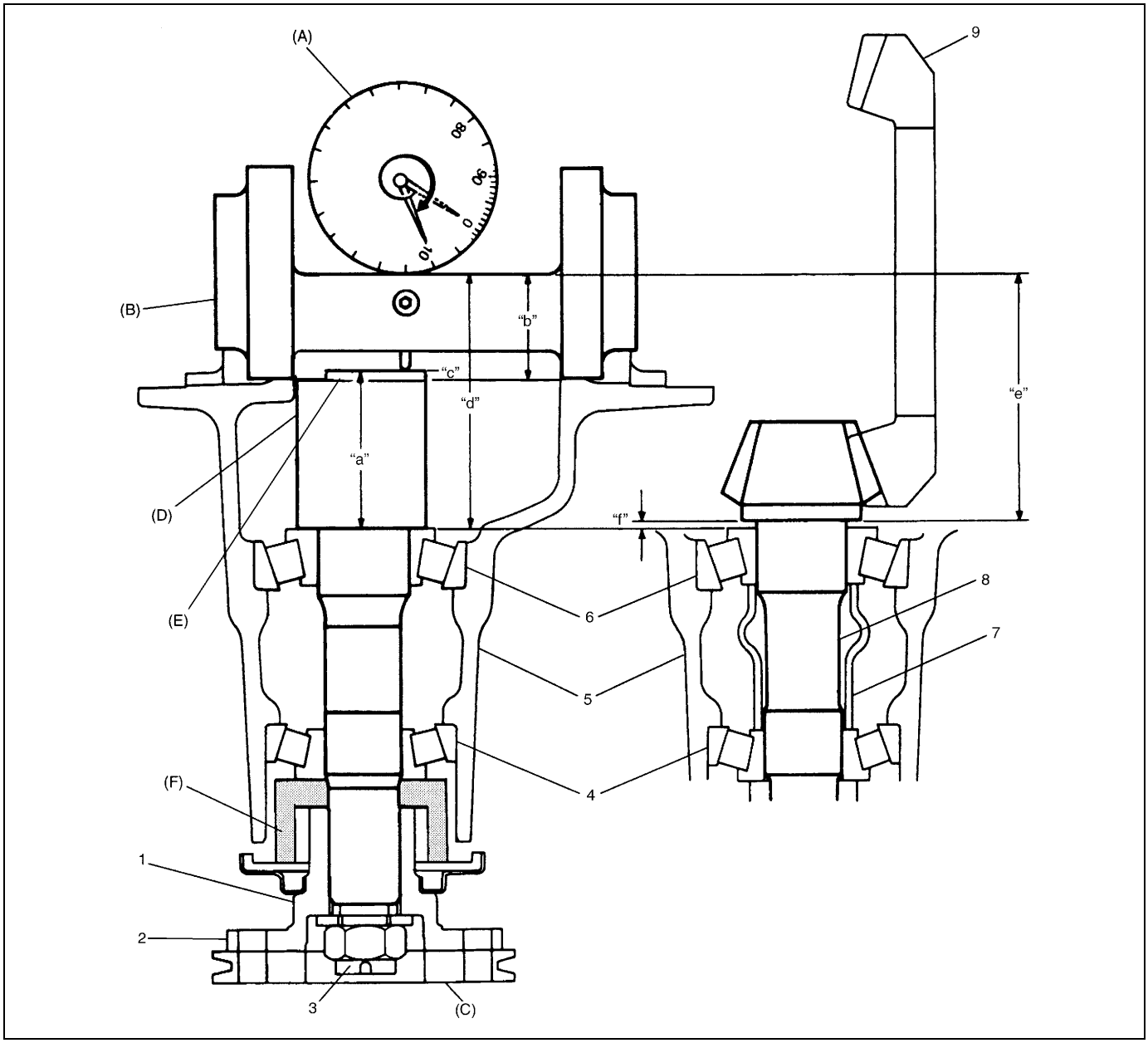

1. Universal joint flange	7. Spacer	"c": Measured dimension
2. No groove on flange periphery	8. Pinion	"d": Differential carrier mounting distance ("a" + "b" + "c")
3. Nut	9. Bevel gear	"e": Pinion mounting distance 102.00 mm (4.01575 in.)
4. Rear bearing	"a": Pinion dummy height + Attachment height	"f": Shim size for mounting distance adjustment ("d" – "e")
5. Differential carrier	"b": Axle dummy radius	
6. Front bearing	"a" + "b" Mounting dummy side 110.00 mm (4.33071 in.)	

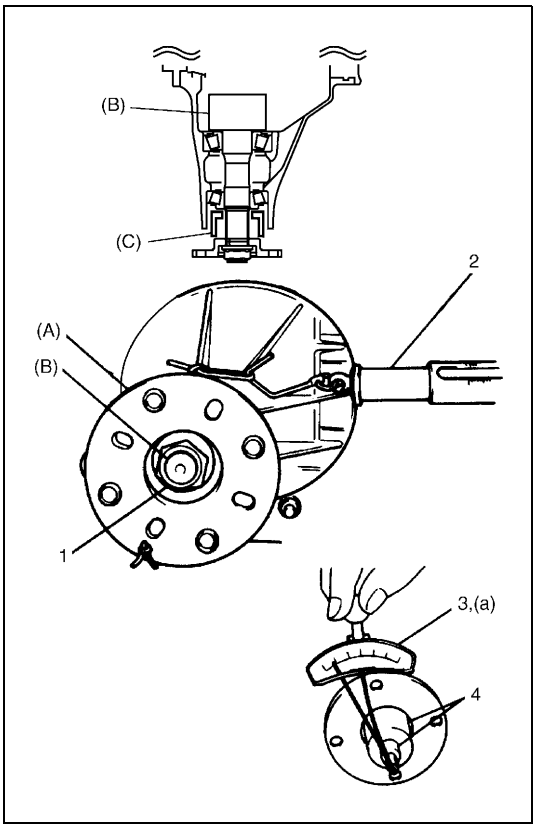

1) Install pinion dummy with bearings into differential carrier and tighten flange nut (1) so that specified bearing preload is obtained.

NOTE:

- **This installation requires no spacer or oil seal.**
- **Before taking measurement with spring balance (2) or torque wrench (3), check for rotation by hand and apply small amount of oil to bearings.**

Special tool
(A): 09922-75222
(B): 09926-78311
(C): 09951-46010

Pinion bearing preload
(a): 0.9 – 1.7 N·m (9.0 – 17.0 kg-cm, 7.8 – 14.7 lb-in)

Spring measure reading:
1.8 – 3.4 kg (4.0 – 7.5 lb)

4.	Socket with adapter

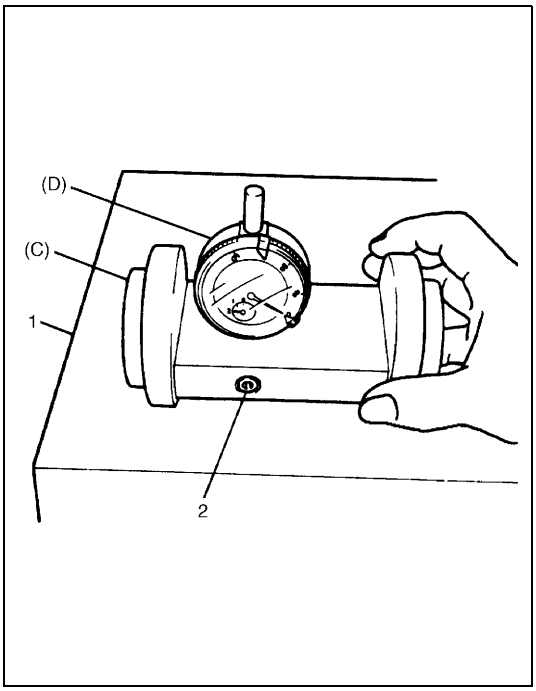

2) Set dial gauge to pinion mounting dummy and make 0 (zero) adjustment on surface plate.

NOTE:

- **When setting dial gauge to mounting dummy, tighten screw lightly. Be careful not to overtighten it, which will cause damage to dial gauge.**
- **With dial gauge set, roll dummy back and force by hand once or twice, and then attain accurate 0 (zero) adjustment.**
- **It is desirable that short pointer indicates beyond 2 mm when long one is at 0 (zero).**

Special tool
(C): 09926-78320
(D): 09900-20607

1.	Surface plate
2.	Screw

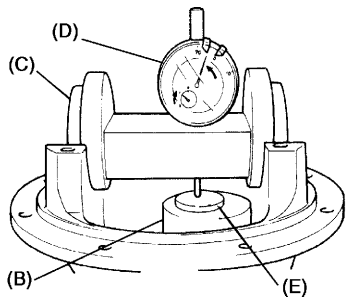

3) Place zero-adjusted mounting dummy and dial gauge set on pinion dummy and take measurement between zero position and extended dial gauge measuring tip.

NOTE:

- **Roll dummy back and force by hand once or twice, and then measure distance as far as top surface of pinion dummy accurately.**
- **When dial gauge measuring tip extends from 0 (zero) position, pointer turns counterclockwise.**

Special tool
(B): 09926-78311
(C): 09926-78320
(D): 09900-20607
(E): 09922-76570

4) Obtain adjusting shim thickness by using measured value by dial gauge (which represents “c” in the first figure of “Drive Bevel Pinion” in this section) in the following equation.

Necessary shim thickness “f”	=	Mounting dummy size 110 mm (4.33071 in.)	+	Dial gauge measured value “c”	–	Measurement printed on pinion “e”

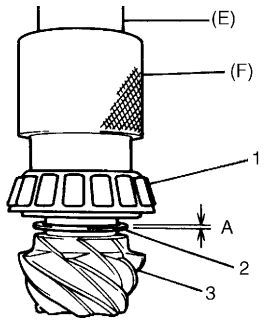

5) Select shim(s) (2) closest to calculated value and put it in place, and then press-fit front bearing (1).

Special tool
(E): 09913-85210
(F): 09927-66010

Available shim thickness
1.00, 1.03, 1.09, 1.12, 1.15, 1.18, 1.21, 1.24, 1.27, 1.30 and 0.3 mm
(0.039, 0.041, 0.043, 0.044, 0.045, 0.046, 0.047, 0.048, 0.049, 0.050 and 0.012 in.)

3.	Bevel pinion
A:	Closest value to “f” (calculated)

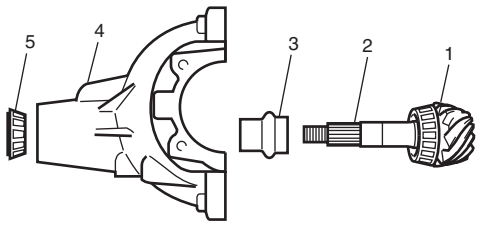

6) With new pinion spacer (3) inserted as shown in the figure, install rear bearing (5) to differential carrier (4).

NOTE:

- **Make sure to use new spacer for reinstallation.**
- **Apply oil to bearings.**

1.	Bevel pinion
2.	Front bearing

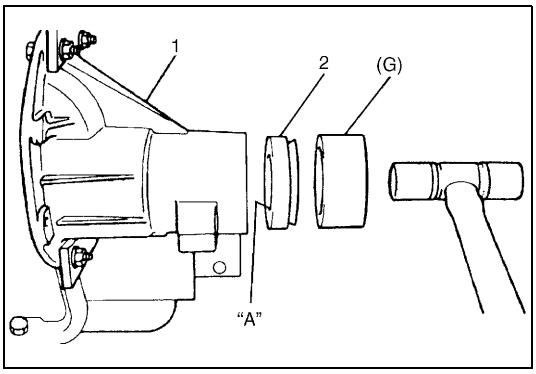

7) Using special tool and plastic hammer drive oil seal (2) into differential carrier (1) till it becomes flush with carrier end. Then, apply grease "A" to oil seal lip.

Special tool
(G): 09951-18210

"A": Grease 99000-25010

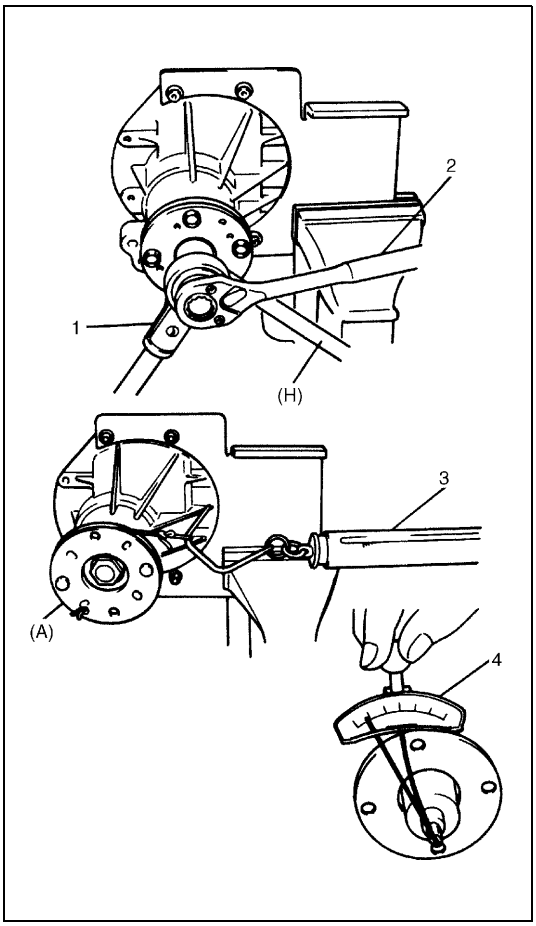

8) While tightening flange nut gradually with flange holder (special tool) and power wrench (4 – 10 magnification) (1), set preload of pinion to specification.

NOTE:

- **Before taking measurement with spring balance (3) or torque wrench (4), check for smooth rotation by hand.**
- **Bearing preload can be measured roughly by pinion rotating angle which is due to arm weight of flange holder installed in flange.**
- **Be sure to tighten gradually and carefully till specified starting torque is obtained. Turning back overtightened flange nuts should be avoided.**

Pinion bearing preload:
0.9 – 1.7 N·m (9.0 – 17.0 kg-cm 7.8 – 14.7 lb-in.)

Spring measure reading:
1.8 – 3.4 kg (4.0 – 7.5 lb)

Special tool
(A): 09922-75222
(H): 09922-66021

2. Socket wrench

Assembly Unit

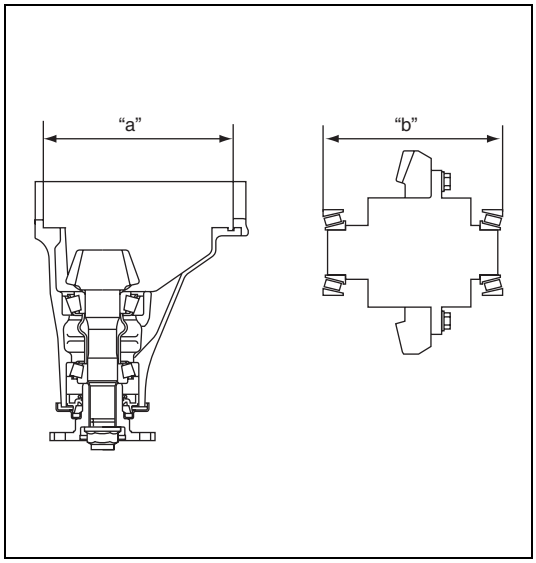

1) Apply gear oil to differential side bearing, place differential side bearing outer races on their respective bearings, and install differential case assembly in differential carrier.
2) Measure distance "a" and "b".
3) Select shim(s) for right and left sides and install them between differential carrier and differential bearing outer races.

NOTE:

Two 2.0 mm (0.079 in.) shims for the left side and two 3.0 mm (0.118 in.) shims for the right side are installed as standard. Therefore, choose shims which are close to the ones mentioned above. For example, if "a" – "b" is 10.05 mm (0.396 in.), combination pattern is as follows.

Pattern	Right side	Left side
1	1.75 mm (0.069 in.), 2.25 mm (0.089 in.)	3.00 mm (0.118 in.), 3.05 mm (0.120 in.)
2	1.85 mm (0.073 in.), 2.15 mm (0.085 in.)	3.00 mm (0.118 in.), 3.05 mm (0.120 in.)
3	1.95 mm (0.077 in.), 2.05 mm (0.081 in.)	3.00 mm (0.118 in.), 3.05 mm (0.120 in.)
4	2.00 mm (0.079 in.), 2.00 mm (0.079 in.)	3.00 mm (0.118 in.), 3.05 mm (0.120 in.)
5	2.00 mm (0.079 in.), 2.05 mm (0.081 in.)	2.75 mm (0.108 in.), 3.25 mm (0.128 in.)
6	2.00 mm (0.079 in.), 2.05 mm (0.081 in.)	2.85 mm (0.112 in.), 3.15 mm (0.124 in.)
7	2.00 mm (0.079 in.), 2.05 mm (0.081 in.)	2.95 mm (0.116 in.), 3.05 mm (0.120 in.)
8	2.00 mm (0.079 in.), 2.05 mm (0.081 in.)	3.00 mm (0.118 in.), 3.00 mm (0.118 in.)

Available shim(s)
Right side
1.75, 1.85, 1.95, 2.00, 2.05, 2.15 and 2.25 mm (0.069, 0.073, 0.077, 0.079, 0.081, 0.085 and 0.089 in.)
Left side
2.75, 2.85, 2.95, 3.00, 3.05, 3.15 and 3.25 mm (0.108, 0.112, 0.116, 0.118, 0.120, 0.124 and 0.128 in.)

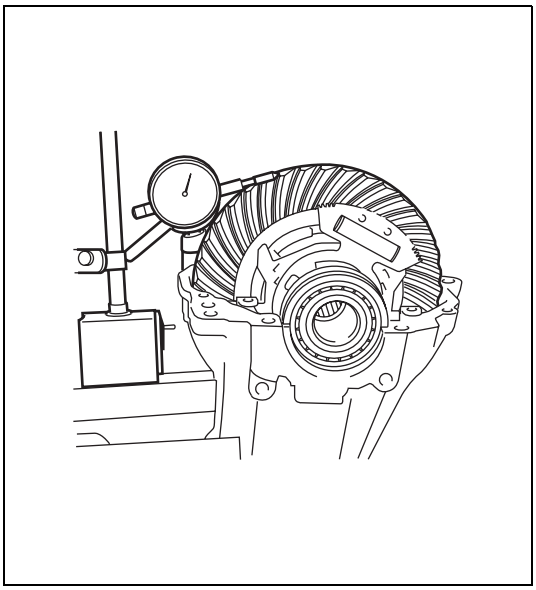

4) Measure bevel gear backlash by using dial gauge. If backlash is out of range, repeat from step 3).

Drive bevel gear backlash
0.10 – 0.20 mm (0.004 – 0.008 in.)

NOTE:

- **Before measurement, hit shims lightly for several times by plastic hammer to position shims in correct position.**
- **Be sure to apply measuring tip of dial gauge at right angle to convex side (drive side) of tooth.**
- **Measure at least 4 points on drive bevel gear periphery.**
- **If backlash is out of specification, change shim(s) so that backlash is within specification.**

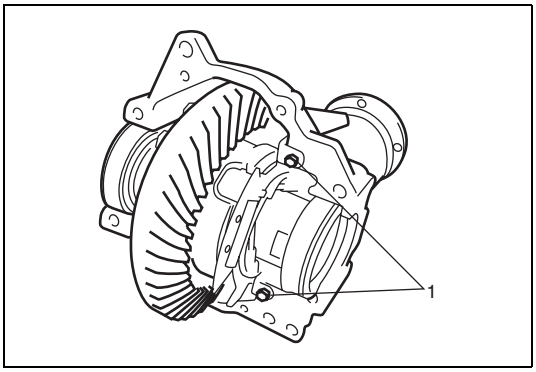

5) Install axle lock actuator mounting bolts.

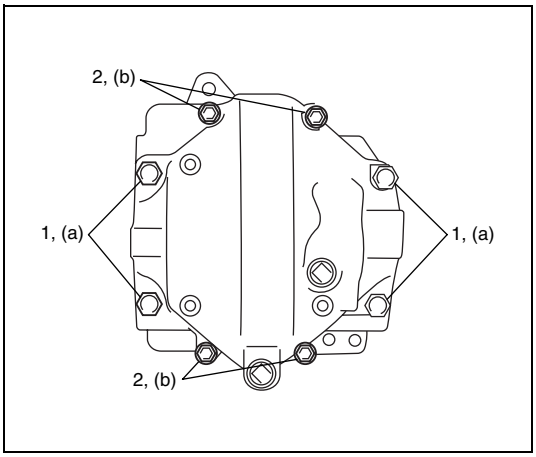

6) Assemble differential carrier cover and differential carrier temporarily.

NOTE:

Tighten 12 mm thread diameter bolts (1) first, then tighten 8 mm thread diameter bolts (2).

Tightening torque
Front differential cover bolt (12 mm)
(a): 85 N·m (8.5 kg-m, 61.5 lb-ft)
Front differential cover bolt (8 mm)
(a): 23 N·m (2.3 kg-m, 17.0 lb-ft

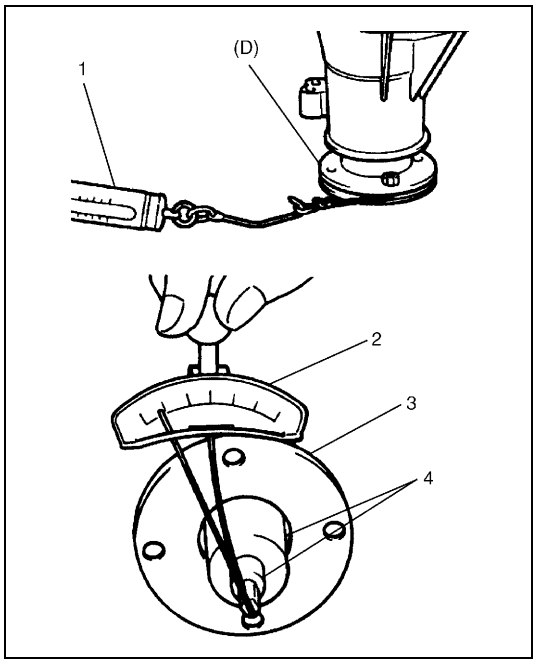

7) Measure preload of pinion with spring balance (1) or torque wrench (2) and check composite preload of pinion bearing and side bearing.

Special tool
(D): 09922-75222

NOTE:

Standard preload is shown in the graph, which should be read as follows.
Example:
When preload of bevel pinion is 2.6 kg/5.73 lb, acceptable composite preload of both pinion bearings and side bearings should be between 2.8 and 3.2 kg/6.17 and 7.05 lb.

3.	Universal joint flange
4.	Socket with adapter

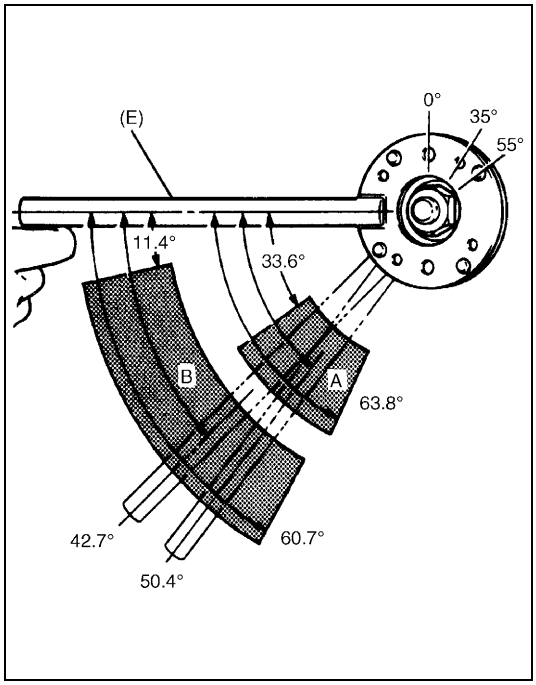

NOTE:

Bearing preload can be checked roughly by using flange holder as shown in the figure. In this measurement, holder arm itself will work as balance weight and torque will be replaced with angle. However, flange should be rotated very slowly with hand support so as not to allow over revolution due to inertia.

Special tool
(E): 09922-66021

"A":	Pinion bearing starting torque range
"B":	Pinion bearing plus side bearing starting torque range

NOTE:

Repeat differential side bearing adjustment until gear backlash and composite bearing preload are compatible within specification.

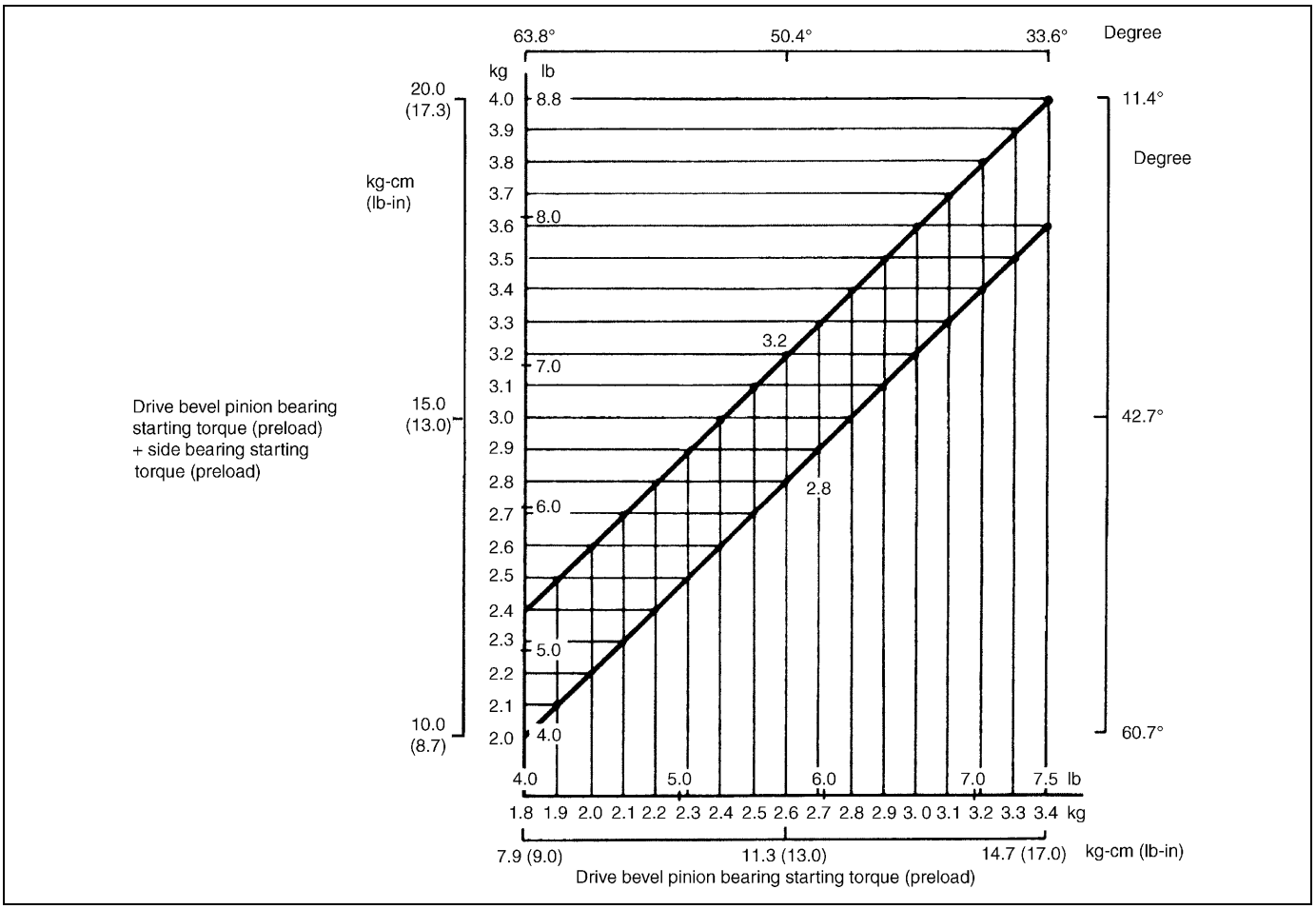

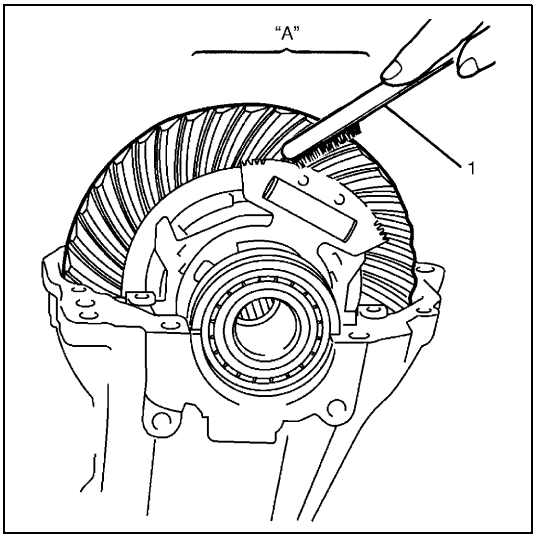

8) As final step, check gear tooth contact as the follows.
   a) After cleaning tooth surface of 10 bevel gears, paint them with gear marking compound evenly by using brush or sponge etc.

1.	Brush
"A":	Paint gear marking compound evenly

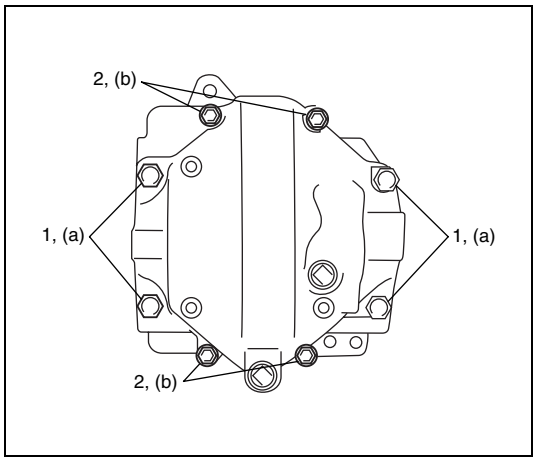

b) Assemble differential carrier cover and differential carrier temporarily.

NOTE:

Tighten 12 mm thread diameter bolts (1) first, and then tighten 8 mm thread diameter bolts (2).

Tightening torque
Front differential cover bolt (12 mm)
(a): 85 N·m (8.5 kg-m, 61.5 lb-ft)
Front differential cover bolt (8 mm)
(a): 23 N·m (2.3 kg-m, 17.0 lb-ft)

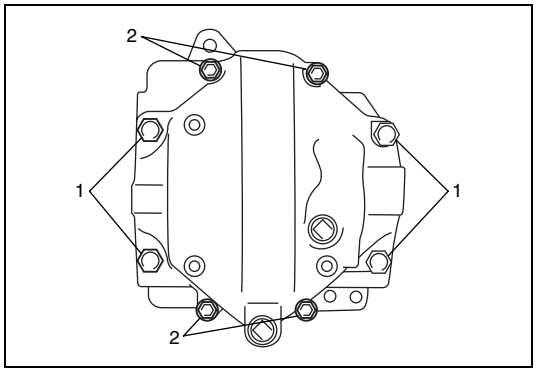

c) Turn gear to bring its painted part in mesh with pinion and turn it back and forth by hand to repeat their contact
d) Remove cover bolts (1, 2) and differential carrier cover.

NOTE:

Loosen 8 mm thread diameter bolts (2) first, and then loosen 12 mm thread diameter bolts (1).

e) Bring painted part up and check contact pattern, referring to the following chart. If contact pattern is not normal, readjust or replace as necessary according to instruction in chart.

NOTE:

Be careful not to turn bevel gear more than one full revolution, for it will hinder accurate check.

TOOTH CONTACT PATTERN	DIAGNOSIS AND REMEDY
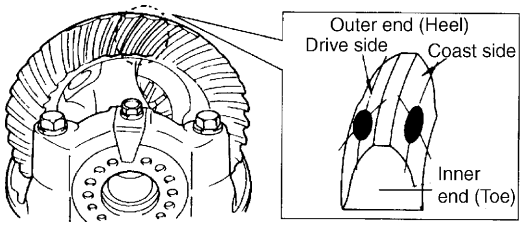	NORMAL
	HIGH CONTACT Pinion is positioned too far from the center of driver bevel gear. 1) Increase thickness of pinion height adjusting shim and position pinion closer to gear center. 2) Adjust drive bevel gear backlash to specification. 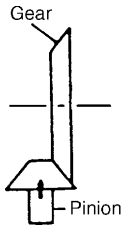
	LOW CONTACT Pinion is positioned too close to the center of drive bevel gear. 1) Decrease thickness of pinion height adjusting shim and position pinion farther from gear center. 2) Adjust drive bevel gear backlash to specification. 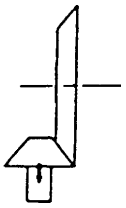
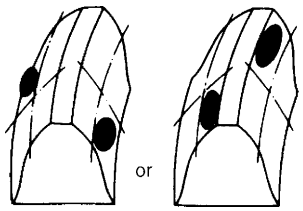	If adjustment is impossible, replace differential carrier.
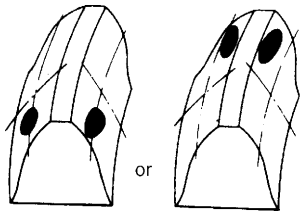	1) Check seating of bevel gear or differential case. (Check bevel gear for runout). 2) If adjustment is impossible, replace drive bevel gear & pinion set or differential carrier.
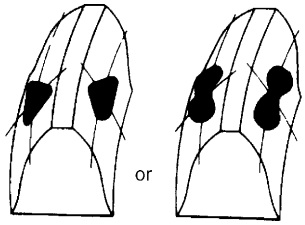	Replace drive bevel gear & pinion set or differential case.

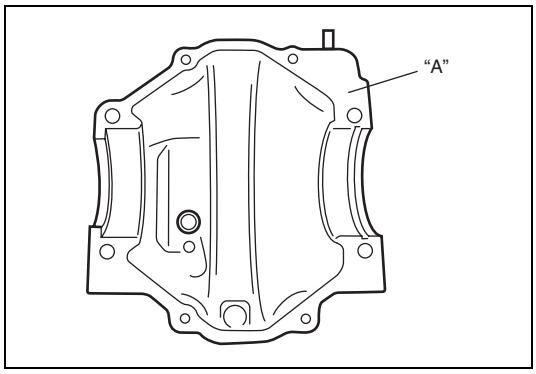

9) Upon completion of gear tooth contact check in step 8), clean mating surfaces of both cover and carrier and apply sealant "A" to cover side evenly.

"A": Sealant 99000-31110

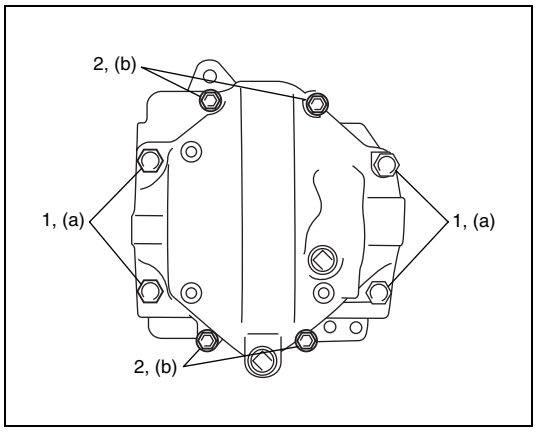

10) Install differential carrier cover to differential carrier.

NOTE:

Tighten 12 mm thread diameter bolts (1) first, then tighten 8 mm thread diameter bolts (2).

Tightening torque
Front differential cover bolt (12 mm)
(a): 85 N·m (8.5 kg-m, 61.5 lb-ft)
Front differential cover bolt (8 mm)
(a): 23 N·m (2.3 kg-m, 17.0 lb-ft)

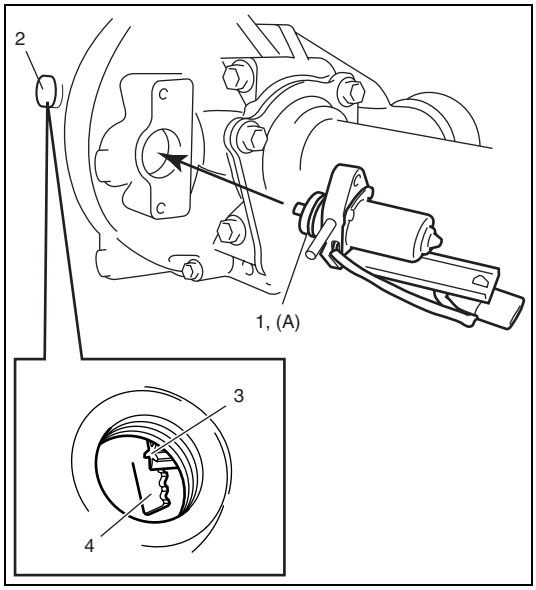

11) Install axle lock actuator motor onto differential carrier cover.

"A": Grease 99000-25010

NOTE:

After installing the axle lock actuator motor, check that the pinion gear of the axle lock actuator motor and the gear section of the actuator are engaged by removing the oil level/filler plug.

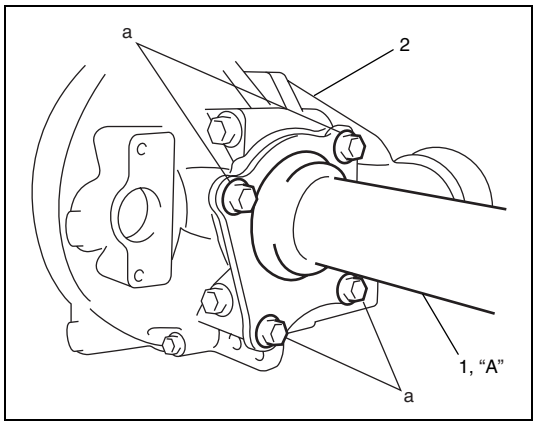

12) Install front drive shaft case (1) to differential housing (2).

"A": Sealant 99000-31110

Tightening torque
Front drive shaft case bolt
(a): 50 N·m (5.0 kg-m, 36.5 lb-ft)

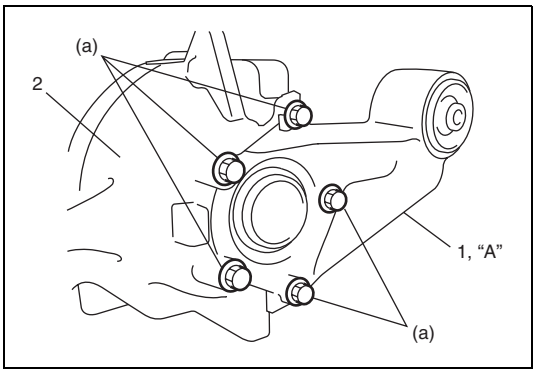

13) Install front mounting bracket R (1) onto differential housing (2).

“A”: Sealant 99000-31110

Tightening torque
Front mounting bracket bolt
(a): 50 N·m (5.0 kg-m, 36.5 lb-ft)

Tightening Torque Specification

Fastening part	Tightening torque		
	N•m	kg-m	lb-ft
Air inlet union	13	1.3	9.5
Actuator bracket bolts	12	1.2	9.0
Bevel gear bolts	85	8.5	61.5
Bearing cap bolts	60	6.0	43.5
Lock plate bolts	13	1.3	9.5
Front differential carrier bolts	23	2.3	17.0

Required Service Material

Material	Recommended SUZUKI product (Part Number)	Use
Thread lock cement	THREAD LOCK CEMENT SUPER 1333B (99000-32020)	Bevel gear bolts
Lithium grease	SUZUKI SUPER GREASE A (99000-25010)	Oil seal lips
Sealant	SUZUKI BOND NO. 1215 (99000-31110)	• Front differential drain and filler plug • Mating surface of differential housing • Air inlet union

Special Tool

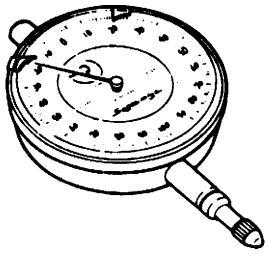 09900-20607 Dial gauge	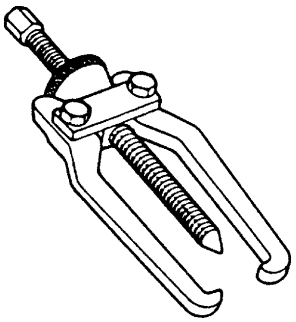 09913-65135 Bearing puller	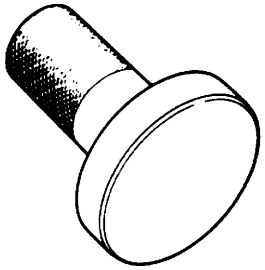 09913-75510 Bearing installer	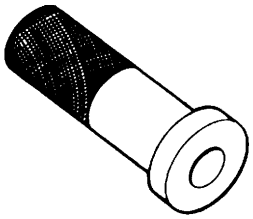 09913-85210 Bearing installer
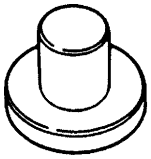 09913-85230 Bearing removing jig	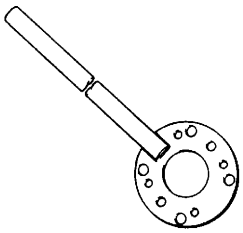 09922-66021 Flange holder	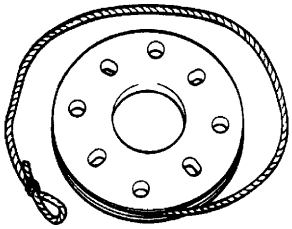 09922-75222 Preload adjuster	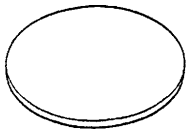 09922-76570 Attachment
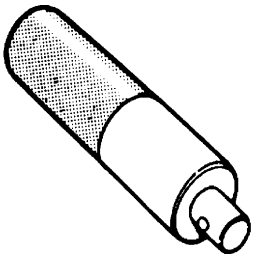 09924-74510 Installer attachment	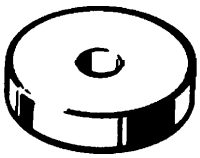 09926-68310 Bearing installer	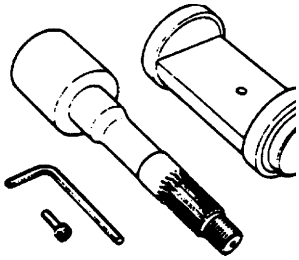 09926-78311 Bevel pinion mounting dummy	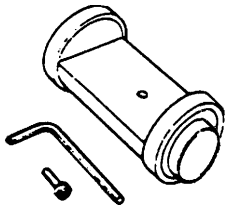 09926-78320 Mounting dummy
 09927-66010/J23082-01 Oil pump aligner	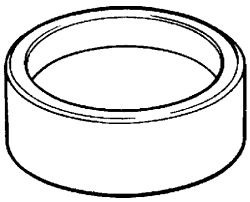 09944-66020 Bearing installer	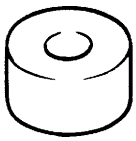 09951-16060 Lower arm bush remover	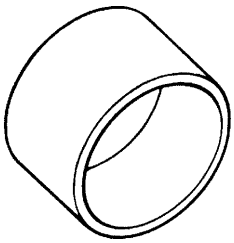 09951-18210 Oil seal remover & installer No. 2

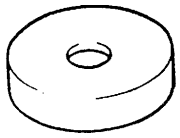

09951-46010
Drive shaft oil seal installer

SECTION 7F

DIFFERENTIAL (REAR)

CONTENTS

OTHER THAN H27 AND RHW ENGINE MODELS

General Description

The differential assembly using a hypoid bevel pinion and gear is installed to the rear axle. It is set in the conventional type axle housing.

The reduction ratio and the differential case vary depending on transmission or engine type.

The differential assembly is decisive in that the drive power is concentrated there. Therefore, use of genuine parts and specified torque is compulsory. Further, because of sliding tooth meshing with high pressure between bevel pinion and gear, it is mandatory to lubricate them by hypoid gear oil.

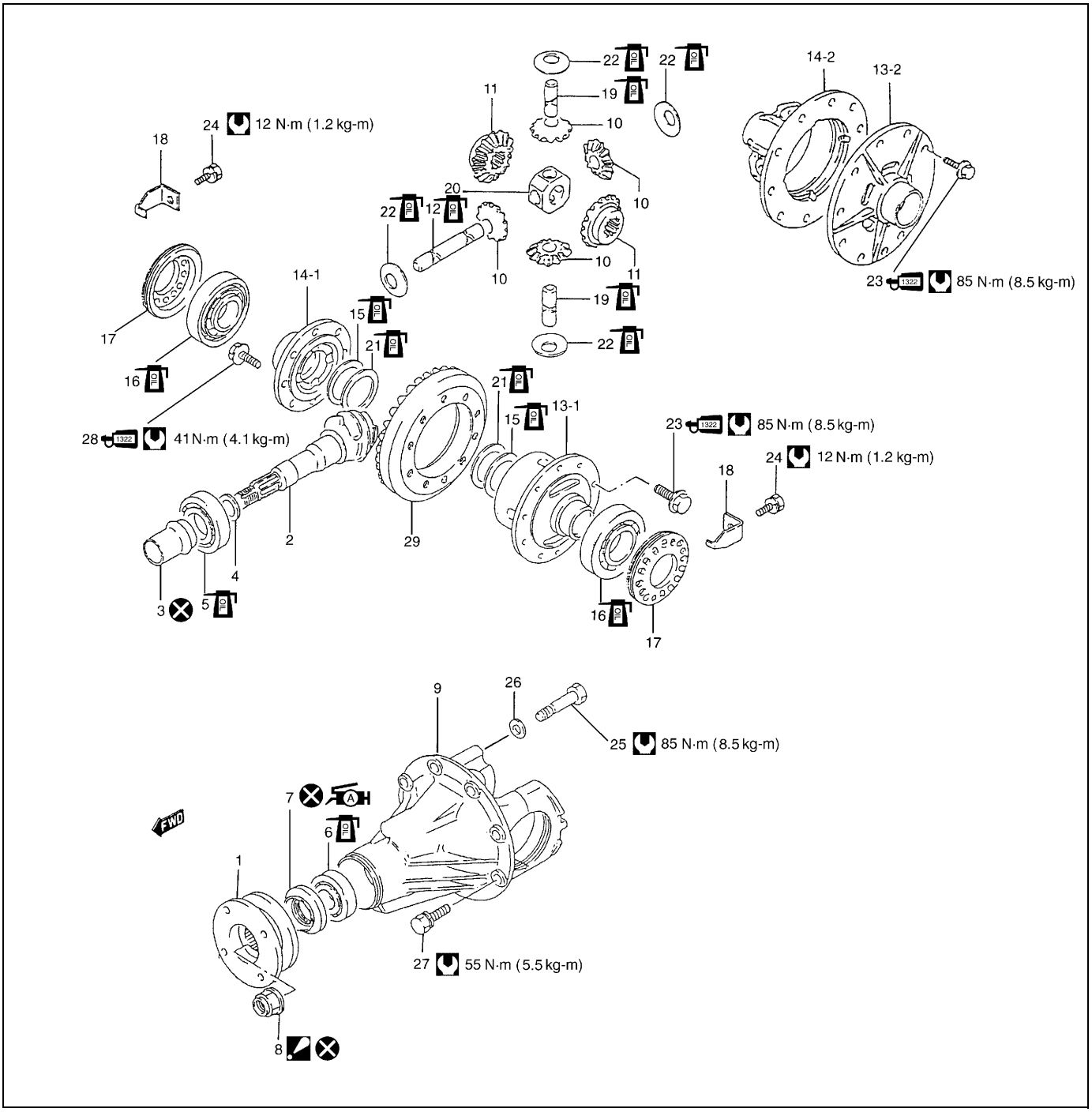

	1.	Universal joint flange	13-1.	Differential left case (4 differential pinion type)	1322	23.	Bevel gear bolt : Apply thread lock cement 99000-32110 to thread part of bolt.
	2.	Bevel pinion	13-2.	Differential left case (2 differential pinion type)		24.	Lock plate bolt
	3.	Bevel pinion spacer	14-1.	Differential right case (4 differential pinion type)		25.	Bearing cap bolt
	4.	Shim	14-2.	Differential right case (2 differential pinion type)		26.	Lock washer
	5.	Rear bearing	15.	Thrust washer		27.	Differential carrier bolt
	6.	Front bearing	16.	Differential side bearing	1322	28.	Differential case bolt : Apply thread lock cement 99000-32110 to thread part of bolt.
A H	7.	Oil seal : Apply grease 99000-25010 to oil seal lip.	17.	Bearing adjuster		29.	Drive bevel gear
	8.	Flange nut : After tightening nut so as rotation torque of bevel pinion shaft to be in specified value, caulk nut securely.	18.	Lock plate			Do not reuse.
	9.	Differential carrier assembly	19.	Pinion shaft No.2			Tightening torque
	10.	Differential pinion	20.	Pinion joint			Apply differential oil.
	11.	Differential gear	21.	Spring washer			
	12.	Pinion shaft No.1	22.	Washer			

Unit Repair

Disassembling Unit

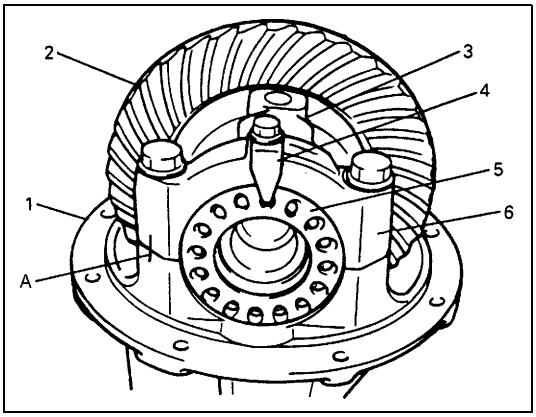

1) Hold differential assembly securely and put identification marks on differential side bearing caps (6).
2) Take off differential side bearing lock plates (4) and differential side bearing caps (6) by removing their bolts and then take out bearing adjusters (5), side bearing outer races and drive bevel gear with differential case.

1.	Differential carrier
2.	Drive bevel gear assembly
3.	Differential case
A:	Identification mark

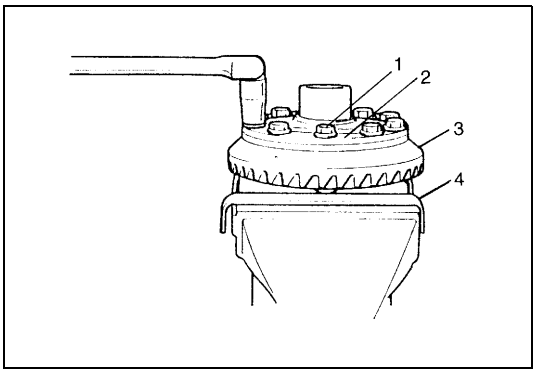

3) For 2 differential pinion type, remove differential side gear, pinion gear and pinion shaft as follows.
   a) With aluminum plates (4) placed on vise first, grip differential case with it and remove bevel gear (3) by removing its bolts (1).
   b) Remove differential left case (2) from differential right case.

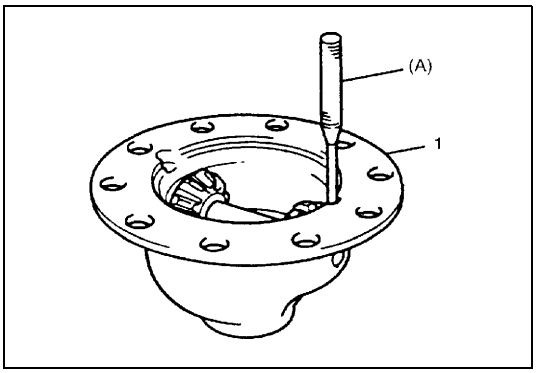

   c) Drive out spring pin with special tool and hammer and disassemble differential side gears, pinions, washers and shaft in differential case (1).

Special tool
(A): 09922-85811

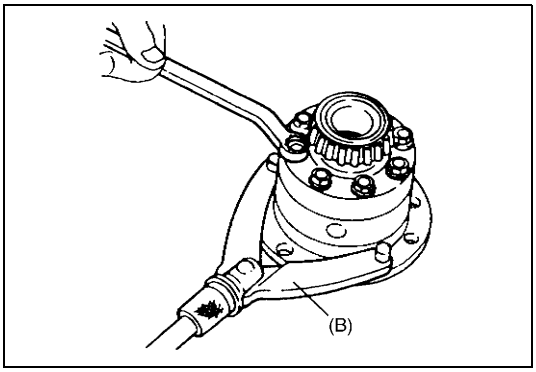

4) For 4 differential pinion type, remove drive bevel gear, pinion gear and pinion shaft as follows.
   a) Remove bevel gear by removing its bolts in the same manner as step a) of 2 differential pinion type (Step 3).
   b) There are 8 bolts fastening two differential case halves together. Remove these bolts to sever right-hand case half from left-hand one, and take off right-hand one.

Special tool
(B): 09930-40113

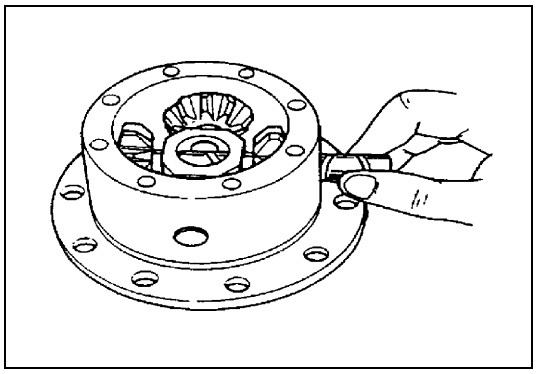

c) Remove pinion shaft, side gears, washers, differential pinions, spring washers, thrust washers.

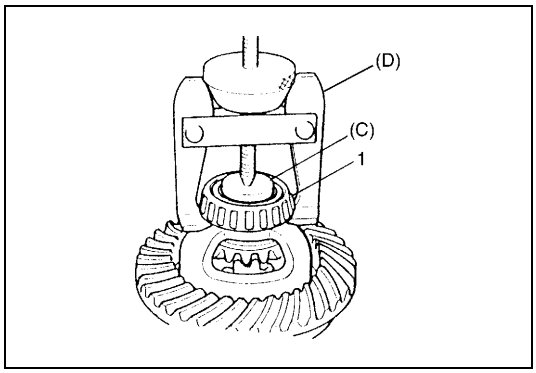

5) Using special tools, pull out differential side bearings (1).

Special tool
(C): 09913-85230
(D): 09913-61510

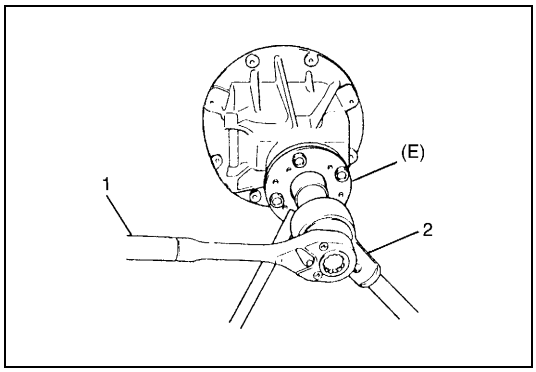

6) Remove bevel pinion assembly as follows.
a) Hold universal joint flange with special tool and then remove flange nut by using power wrench (4 – 10 magnification) (2).

Special tool
(E): 09922-66020

1.	Socket wrench

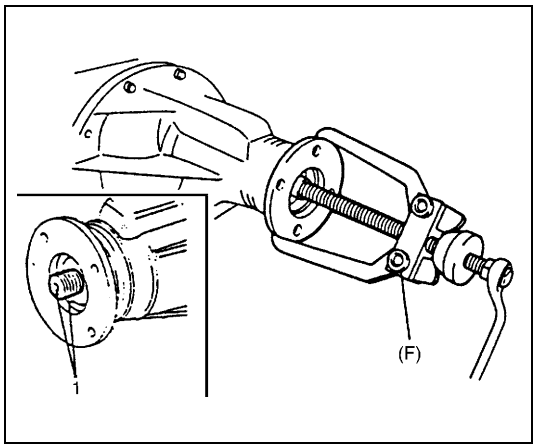

b) Make mating marks (1) on drive bevel pinion and companion flange.

CAUTION:
Don't make mating mark on the coupling surface of the flange.

c) Remove companion flange from pinion. Use special tool if it is hard to remove.

Special tool
(F): 09913-65135

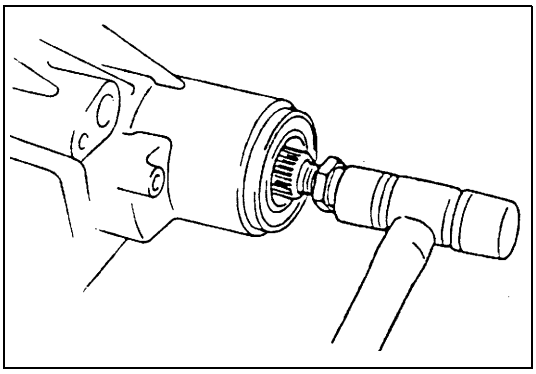

d) Remove bevel pinion with rear bearing, shim and spacer from carrier.
If it is hard to remove, screw an used nut into pinion and hammer on that nut with a plastic hammer but never directly on pinion.

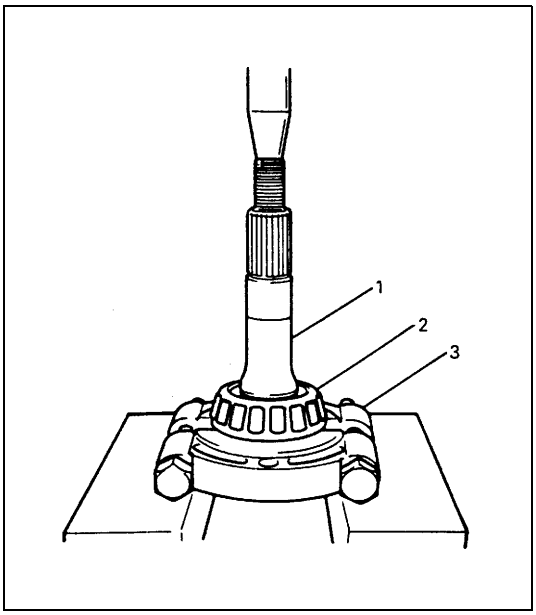

e) Remove bevel pinion rear bearing (2) by using bearing puller (3) and press.

1. Drive bevel pinion

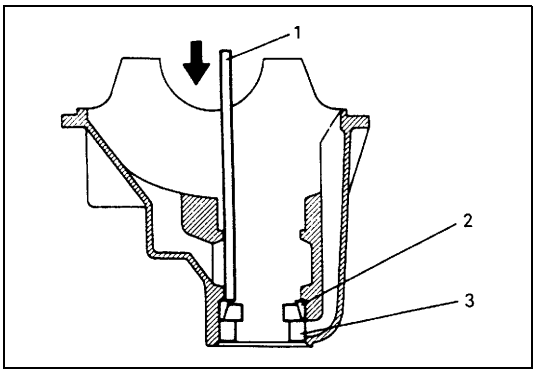

7) Using a hammer and brass bar (1), drive out front bearing outer race with bearing (2) and oil seal (3).

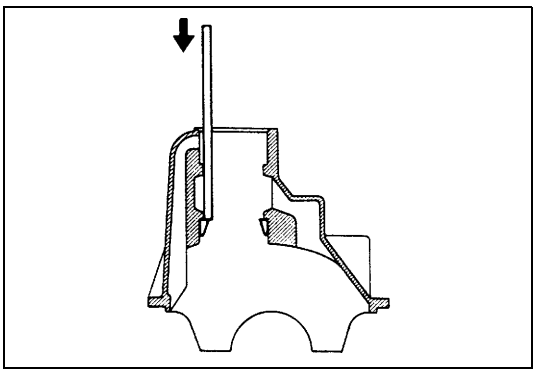

8) Drive out rear bearing outer race in the same way as in the step 7).

Component Inspection

- Check companion flange for wear or damage.
- Check bearings for wear or discoloration.
- Check differential carrier for cracks.
- Check drive bevel pinion and bevel gear for wear or cracks.
- Check side gears, pinion gears and pinion shaft for wear or damage.
- Check side gear spline for wear or damage.

Sub-Assembly Adjustment and Reassembly

Judging from faulty conditions noted before disassembly and what is found through visual check of bearing and gear tooth etc. after disassembly, prepare replacing parts and proceed to reassembly according to procedures as described below.

CAUTION:
- **Bevel gear and pinion must be replaced as a set when either replacement becomes necessary.**
- **When replacing taper roller bearing, replace as inner race & outer race assembly.**

Differential carrier

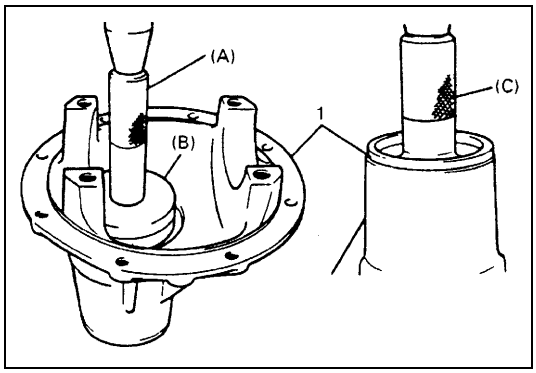

For press-fitting bevel pinion bearing outer races, use special tools as shown in the figure.

Special tool
(A): 09924-74510
(B): 09926-68310
(C): 09913-75510

1. Differential carrier

Differential case

FOR 2 DIFFERENTIAL PINION TYPE

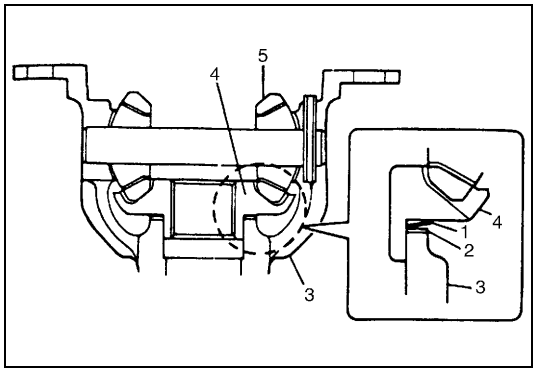

1) After applying differential oil to side gear (4), pinions (5), pinion shaft, thrust washer (2) and spring washer (1), install them in differential right case (3).
   For correct installing direction of thrust washer (2) and spring washer (1), refer to the figure.

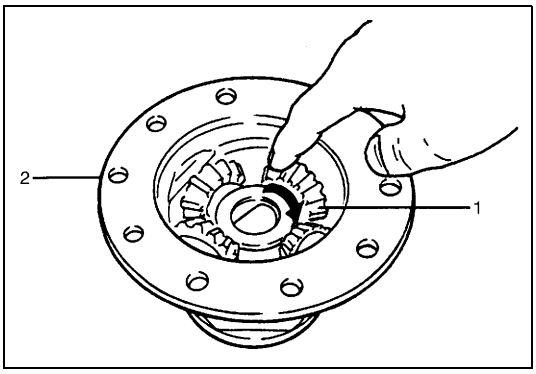

2) Check pinion gear (1) for smooth rotation.

2. Differential right case

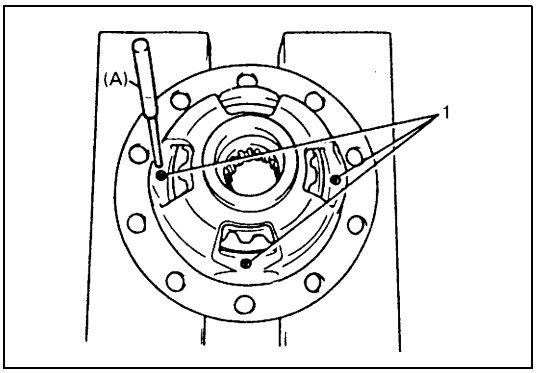

3) Align pinion shaft hole position with differential case and drive in 3 spring pins (1) till they are flush with end surface of case.

Special tool
(A): 09922-85811

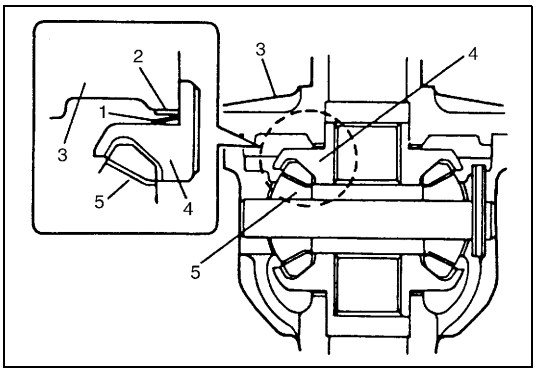

4) In the same manner as described in Step 1), install thrust washer (2), spring washer (1) and side gear (4).

3. Differential left case
5. Pinion

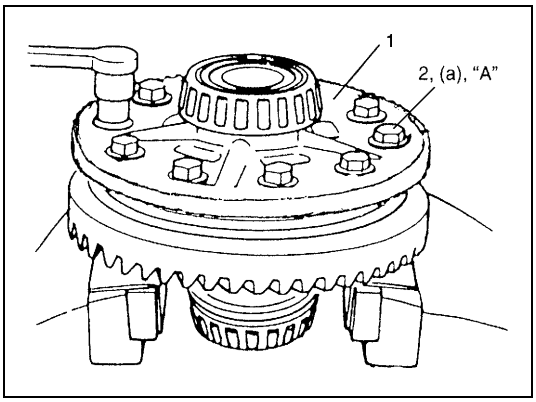

5) Put bevel gear on differential case (1).
Tighten bolts (2) with thread lock cement to specified torque.

CAUTION:
Use of any other bolts than that specified is prohibited.

"A": Cement 99000-32110

Tightening torque
Bevel gear bolt
(a): 85 N·m (8.5 kg-m, 61.5 lb-ft)

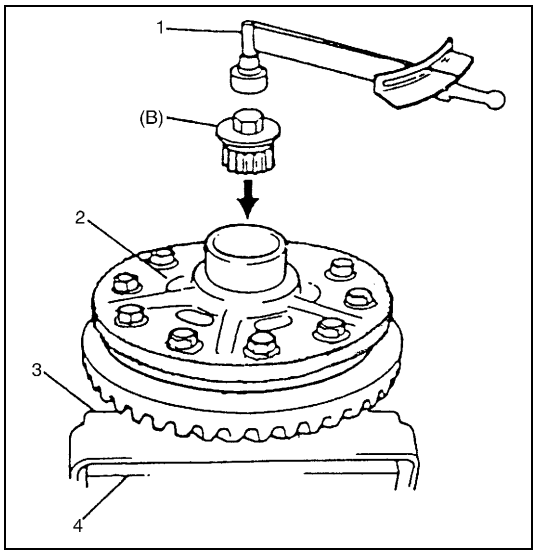

6) Install special tool to differential case assembly and check that preload is within specification below. If preload exceeds specified value, check if foreign matter is caught or gear is damaged.

Special tool
(B): 09928-06010-002

Side gear preload
: Max. 2.5 N·m (0.25 kg-m, 1.8 lb-ft)

1.	Torque wrench
2.	Differential case assembly
3.	Aluminum plate
4.	Vise

FOR 4 DIFFERENTIAL PINION TYPE

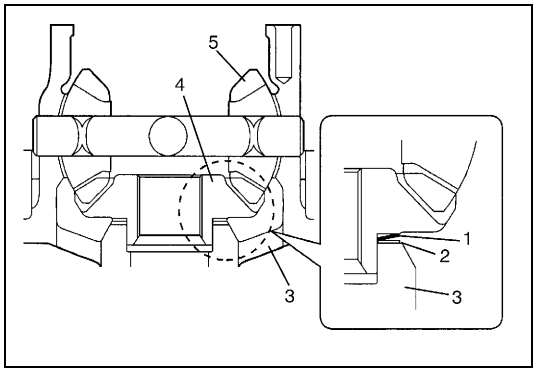

1) After applying differential oil to side gear (4), pinions (5), pinion shafts, washer, thrust washer (2) and spring washer (1), install them in differential left case (3).
For correct installing direction of thrust washer (2) and spring washer (1), refer to the figure.

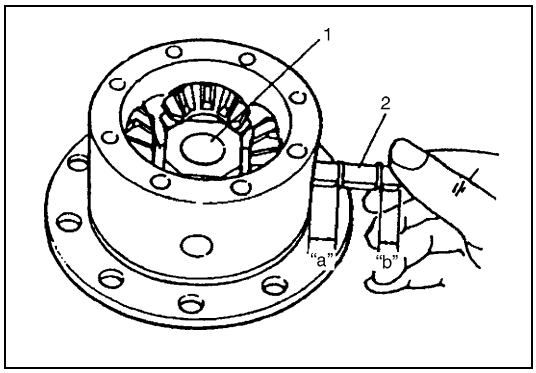

2) When installing pinion shaft No.2 (2) (shorter) into differential case and pinion, insert its "a" side into pinion joint (1).

NOTE:
"a" is longer than "b". ("a" > "b")

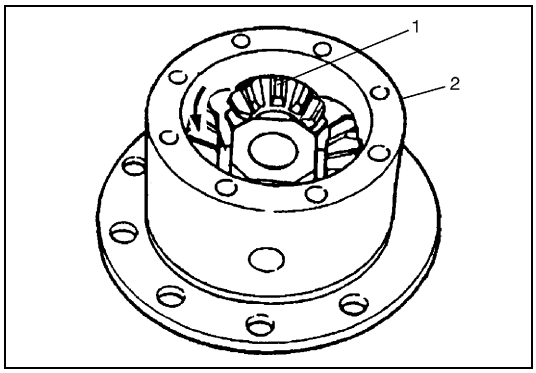

3) Check pinion gear (1) for smooth rotation.

2.	Differential left case

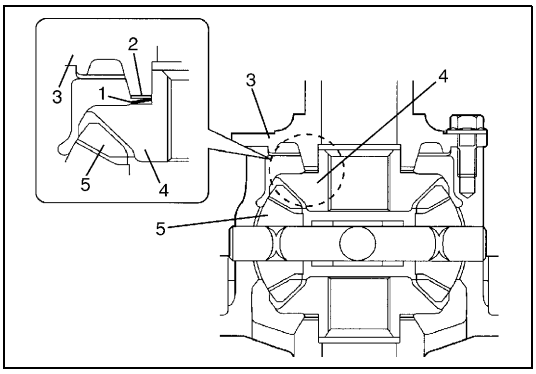

4) In the same manner as described in Step 1), install thrust washer (2), spring washer (1) and side gear (4).

3.	Differential right case
5.	Pinion

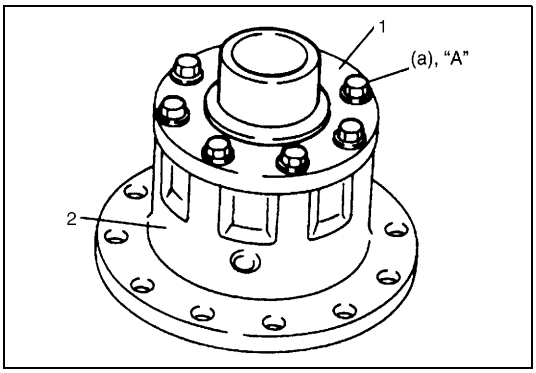

5) Install differential right case (1) and then tighten bolts with thread lock cement to specified torque.

"A": Cement 99000-32110

Tightening torque
Differential case bolt
(a): 41 N·m (4.1 kg-m, 30.0 lb-ft)

2.	Differential left case

6) Install bevel gear in the same manner as step 5) of 2 differential pinion type.
7) Check preload in the same manner as step 6) of 2 differential pinion type.

Differential side bearing

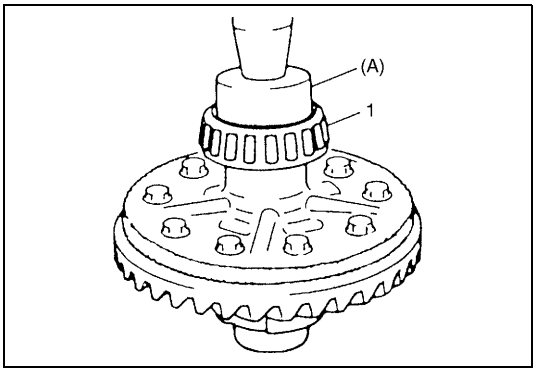

1) Press-fit side bearing (1) with special tool and press.

Special tool
(A): 09944-66020

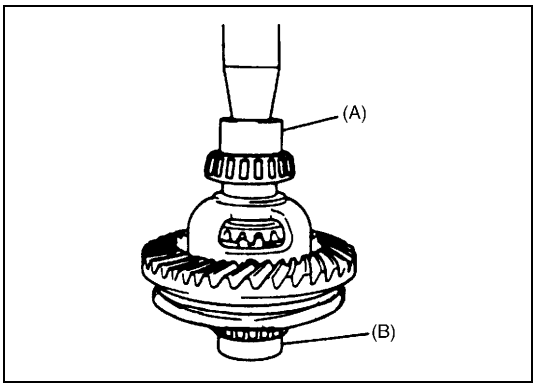

2) Hold bearing press-fitted in Step 1) with holder and press-fit side bearing on the other side.

NOTE:

Be sure to use bearing holder for the purpose of protecting lower bearing.

Special tool
(A): 09944-66020
(B): 09951-16060

Drive bevel pinion

To engage bevel pinion and gear correctly, it is pre-required to install bevel pinion to differential carrier properly by using adjusting shim as described on the followings. Shown below is relative positions of bevel pinion, differential carrier and mounting dummy.

Special tool
(A): 09900-20606
(B): 09926-78311
(C): 09922-75222
(D): 09951-16070
(E): 09922-77250 (4 differential pinion type)
(F): 09951-46010 (4 differential pinion type)

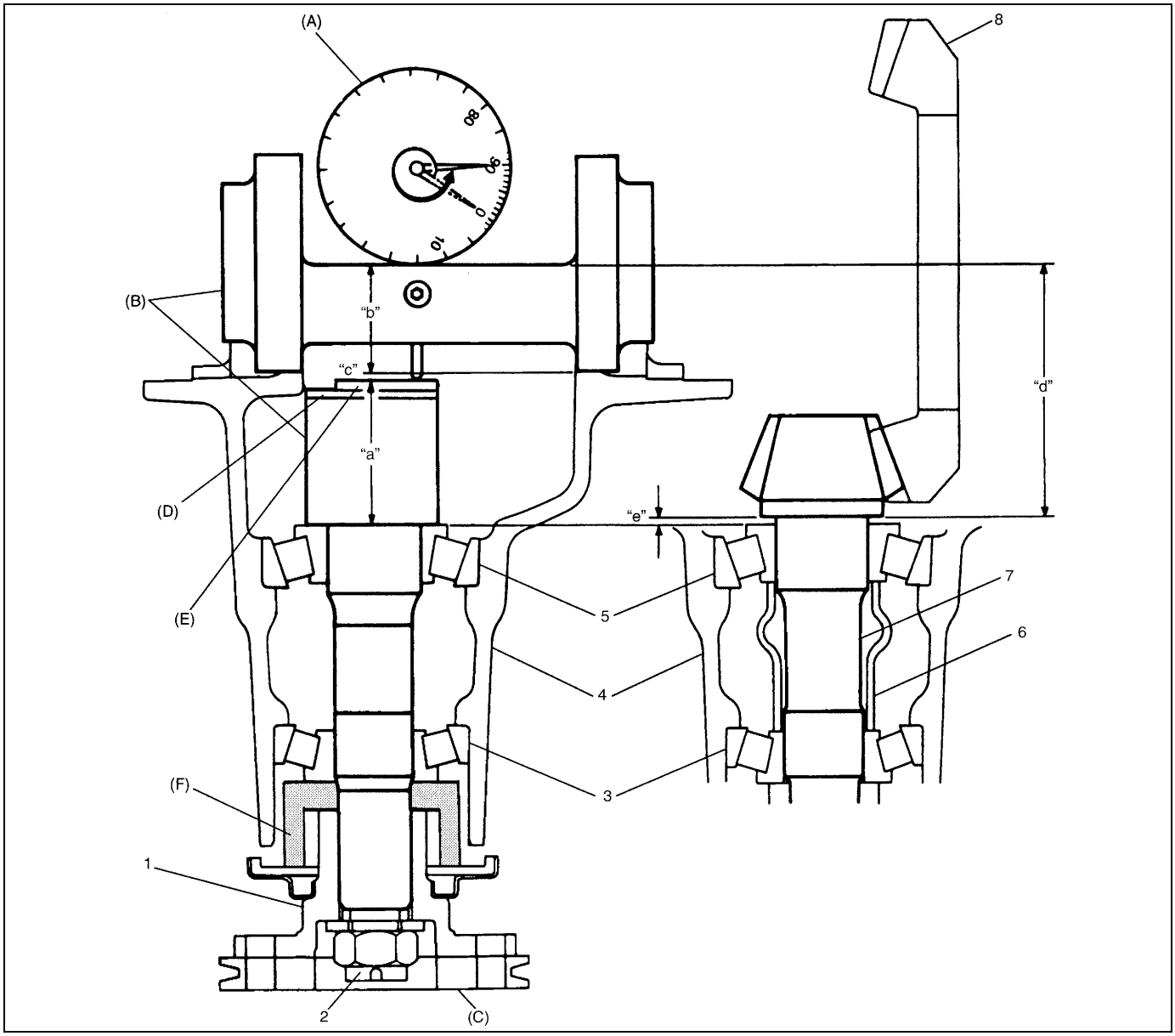

1. Universal Joint flange (P/No. 27110-60A00)	8. Bevel gear
2. Flange nut	"a": Pinion dummy height + Attachment height
3. Front bearing	"b": Axle dummy radius
4. Differential carrier	"a" + "b" Mounting dummy size 97.00 mm/3.81889 in. (2 differential pinion type) 102.00 mm/4.01575 in. (4 differential pinion type)
5. Rear bearing	"c": Measured dimension
6. Spacer	"d": Bevel pinion mounting distance 97.00 mm/3.81889 in. (2 differential pinion type) 102.00 mm/ 4.01575 in. (4 differential pinion type)
7. Bevel pinion	"e": Shim size for mounting distance adjustment (= "c")

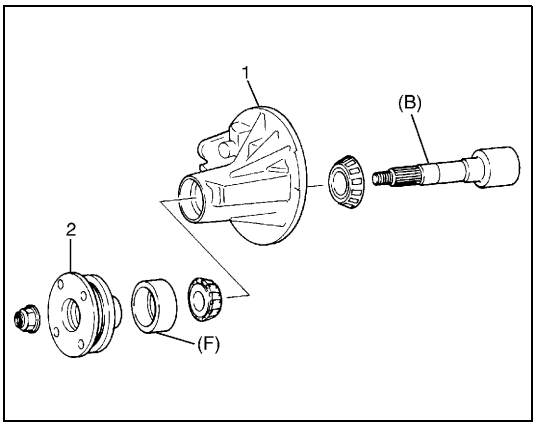

1) Install special tools with bearings and universal joint flange (2) to differential carrier (1).

NOTE:

- **This installation requires universal joint flange (2) not equipped with groove on flange periphery.**
- **This installation requires no spacer or oil seal.**

Special tool
(B): 09926-78311
(F): 09951-46010 (4 differential pinion type)

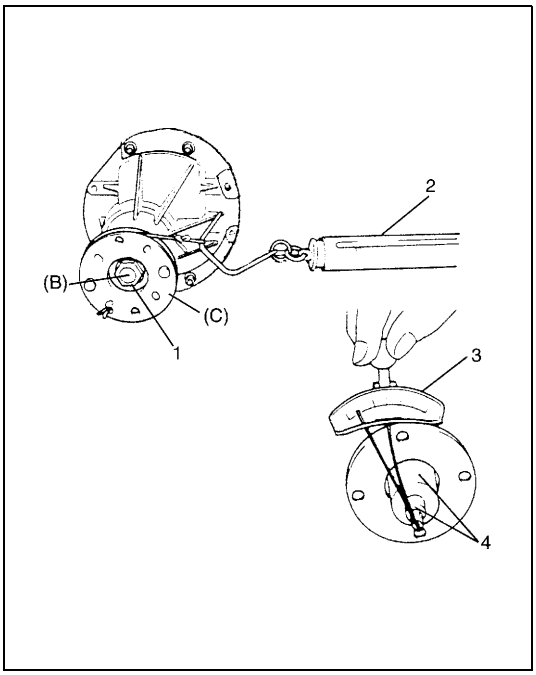

2) Tighten flange nut (1) so that specified bearing preload is obtained.

NOTE:

Before taking measurement with spring balance (2) or torque wrench (3), check for rotation by hand and apply small amount of oil to bearings.

Special tool
(B): 09926-78311
(C): 09922-75222

Pinion bearing preload
: 0.9 – 1.7 N·m (9.0 – 17.0 kg-cm, 7.8 – 14.7 lb-in.)

Spring measure reading with special tool
: 18 – 34 N (1.8 – 3.4 kg, 4.0 – 7.5 lb)

4. Socket with adapter

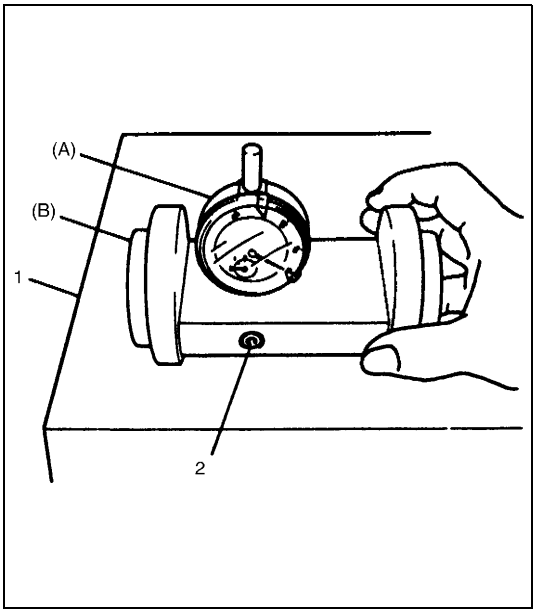

3) Set dial gauge to bevel pinion mounting dummy and make 0 (zero) adjustment on surface plate (1).

NOTE:

- **When setting dial gauge to mounting dummy, tighten screw (2) lightly. Be careful not to overtighten it, which will cause damage to dial gauge.**
- **With dial gauge set, turn dummy back and force by hand a couple of times and attain accurate 0 (zero) adjustment.**
- **It is desirable that short pointer indicates beyond 2 mm (0.08 in.) when long one is at 0 (zero).**

Special tool
(A): 09900-20606
(B): 09926-78311

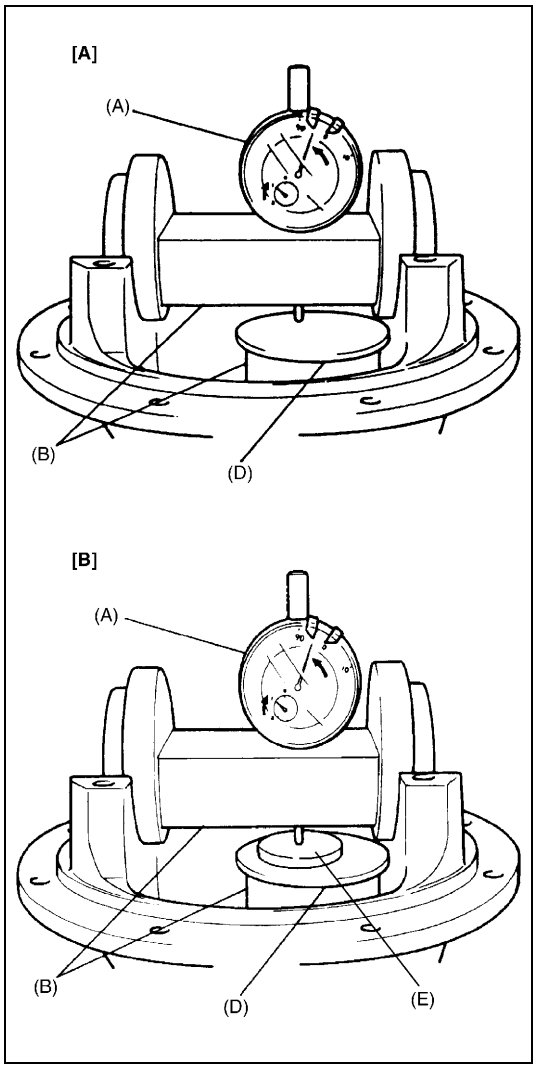

4) Place zero-adjusted mounting dummy and dial gauge set on pinion mounting dummy and take measurement between zero position and extended dial gauge measuring tip.

NOTE:

- **Repeat turning back and force of dummy and measure distance as far as top surface of pinion dummy accurately.**
- **When dial gauge measuring tip extends from 0 (zero) position, pointer turns counterclockwise.**
- **Measured value may exceed 1 mm (0.04 in.). Therefore, it is also necessary to know reading of short pointer.**

Special tool
(A): 09900-20606
(B): 09926-78311
(D): 09951-16070
(E): 09922-77250 (4 differential pinion type)

5) Obtain adjusting shim thickness by using measured value by dial gauge in previous step.

Necessary shim thickness "e"	=	Dial gauge measured value "c"

[A]: 2 differential pinion type
[B]: 4 differential pinion type

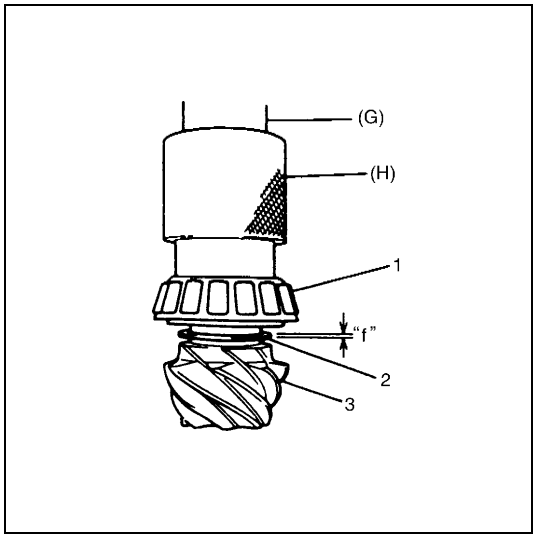

6) Select adjusting shim(s) (2) closest to calculated value from among following available sizes and put it in place and then press-fit rear bearing (1).

Calculated value "f":
Closest value to "e" (refer to Step 5).)

Special tool
(G): 09925-18011
(H): 09927-66010

Available shim thickness:
1.12, 1.15, 1.18, 1.21,1.24, 1.27, 1.30 and 0.3 mm
(0.044, 0.045, 0.046, 0.047 0.048, 0.049, 0.050 and 0.012 in.)

3. Bevel pinion

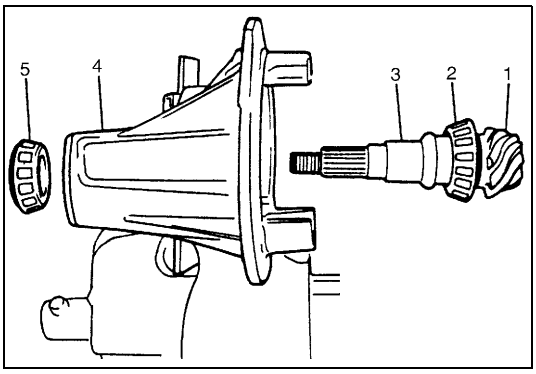

7) With new pinion spacer (3) inserted as shown in the figure, install front bearing (5) to differential carrier (4).

NOTE:

- **Make sure to use new spacer for reinstallation.**
- **Apply differential oil to bearings.**

1.	Bevel pinion
2.	Rear bearing

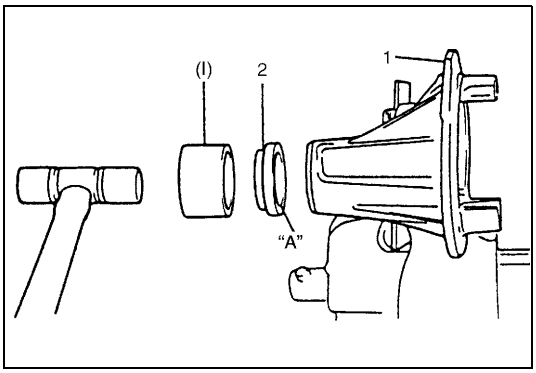

8) Using special tool and plastic hammer, drive oil seal (2) into differential carrier (1) till it becomes flush with carrier end. Then apply grease "A" to oil seal lip.

"A": Grease 99000-25010

Special tool
(I): 09951-18210

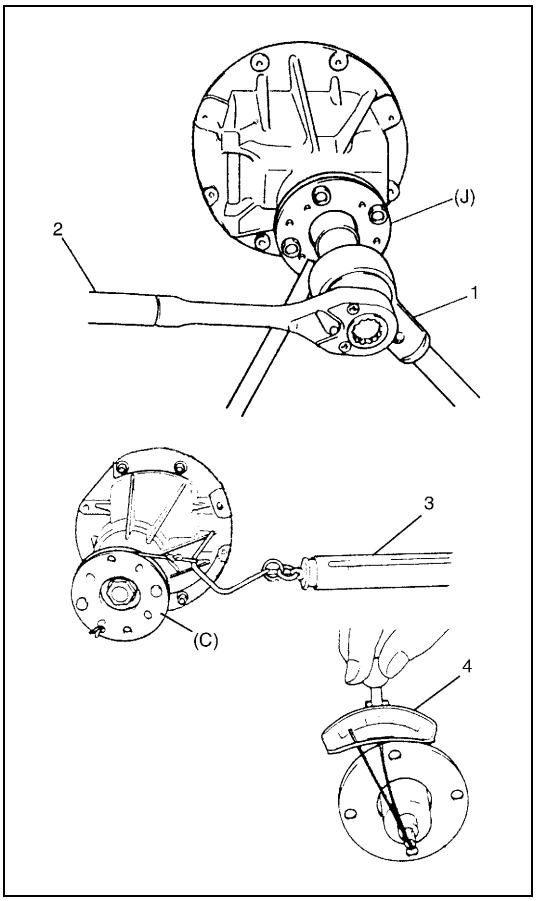

9) While tightening flange nut gradually with special tool and power wrench (4 – 10 magnification) (1), set preload of pinion to specification.

NOTE:

- **Before taking measurement with spring balance (3) or torque wrench (4), check for smooth rotation by hand.**
- **Bearing preload can be measured roughly by pinion rotating angle which is due to arm weight of flange holder installed in flange.**
- **Be sure to tighten gradually and carefully till specified starting torque is obtained. Turning back overtightened flange nuts should be avoided.**

Pinion bearing preload
: 0.9 – 1.7 N·m (9.0 – 17.0 kg-cm, 7.8 – 14.7 lb-in.)

Spring measure reading with special tool
: 18 – 34 N (1.8 – 3.4 kg, 4.0 – 7.5 lb)

Special tool
(C): 09922-75222
(J): 09922-66020

2.	Socket wrench

Assembling Unit

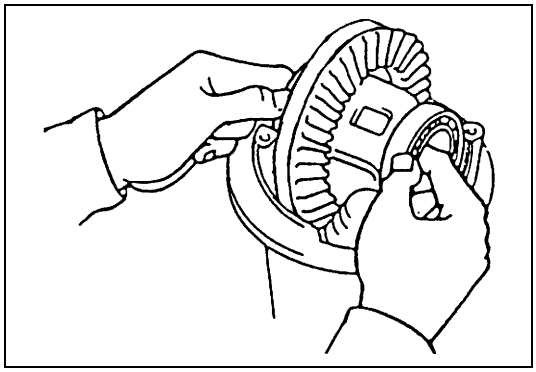

1) Place bearing outer races on their respective bearings. Used left and right outer races are not interchangeable.
2) Install case assembly in carrier.
3) Install side bearing adjusters on their respective carrier, making sure adjuster are threaded properly.

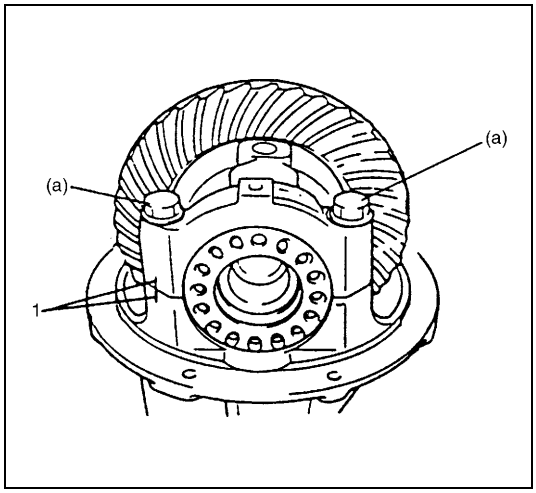

4) Align match marks (1) on cap and carrier. Screw in 2 side bearing cap bolts 2 or 3 turns and press down bearing cap by hand.

NOTE:

If bearing cap does not fit tightly on carrier, side bearing adjuster is not threaded properly. Reinstall adjuster.

5) Tighten cap bolts (provisional torque).

Tightening torque
Bearing Cap bolt (Provisional torque)
(a): 15 N·m (1.5 kg-m, 11.0 lb-ft)

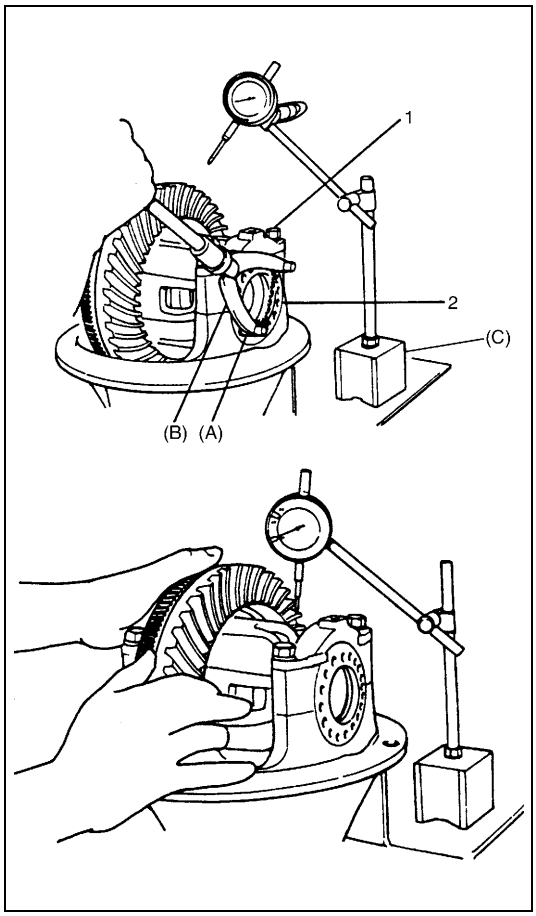

6) Tighten both bearing adjusters (2) so as to obtain specified gear backlash and at the same time, obtain preload of side bearing.

NOTE:

- **Be sure to apply measuring tip of dial gauge at right angles to convex side of tooth.**
- **As a practical measure the following would be recommended to obtain specified backlash and side bearing preload at the same time.**
  - **Obtain specified backlash by turning both adjusters inward lightly.**
  - **Tighten both adjusters further by one notch at a time.**
- **Measure at least 4 points on drive bevel gear periphery.**

Standard backlash
: 0.13 – 0.18 mm (0.005 – 0.007 in.)

Special tool
(A): 09930-40120
(B): 09930-40113
(C): 09900-20701

1. Bearing cap bolt

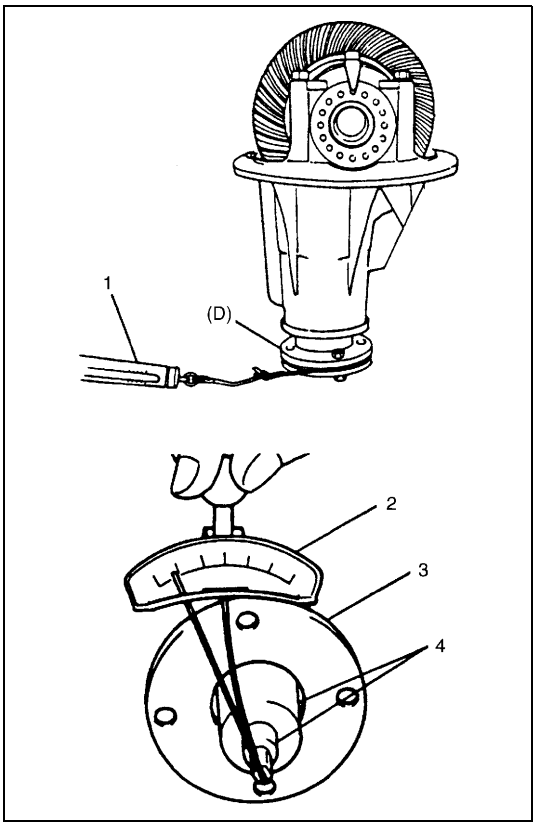

7) Measure preload of pinion with spring balance (1) or torque wrench (2) and check composite preload of pinion bearing and side bearing.

NOTE:

- **Standard preload is shown in the following graph, which should be read as follows.**
  Example:
  When preload of bevel pinion is 26 N (2.6 kg, 5.73 lb), acceptable composite preload of both pinion bearings and side bearings should be between 28 and 32 N (2.8 and 3.2 kg, 6.17 and 7.05 lb).

Special tool
(D): 09922-75222

3.	Universal joint flange
4.	Socket with adapter

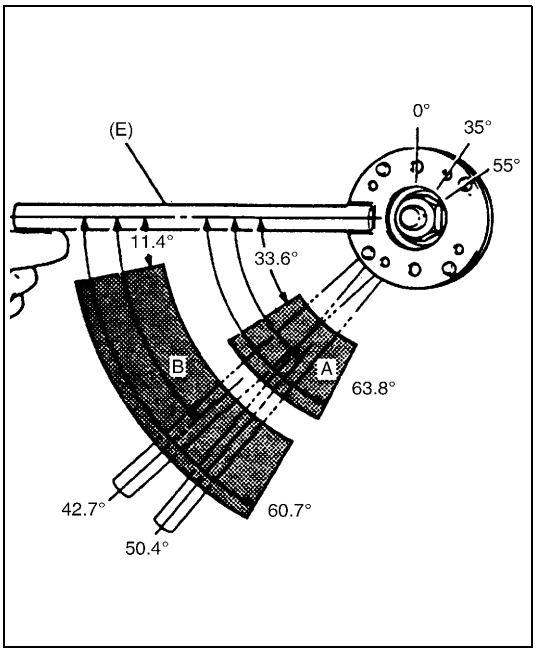

NOTE:

- **Bearing preload can be checked roughly by using flange holder as shown in left figure. In this measurement, holder arm itself will work as balance weight and torque will be replaced with angle. However, flange should be rotated very slowly with hand support so as not to allow over revolution due to inertia.**
- **Repeat side bearing adjustment until gear backlash and composite bearing preload are compatible within specification, if failed to obtain specified measurements first.**

Special tool
(E): 09922-66020

"A":	Pinion bearing starting torque range
"B":	Pinion bearing plus side bearing starting torque range

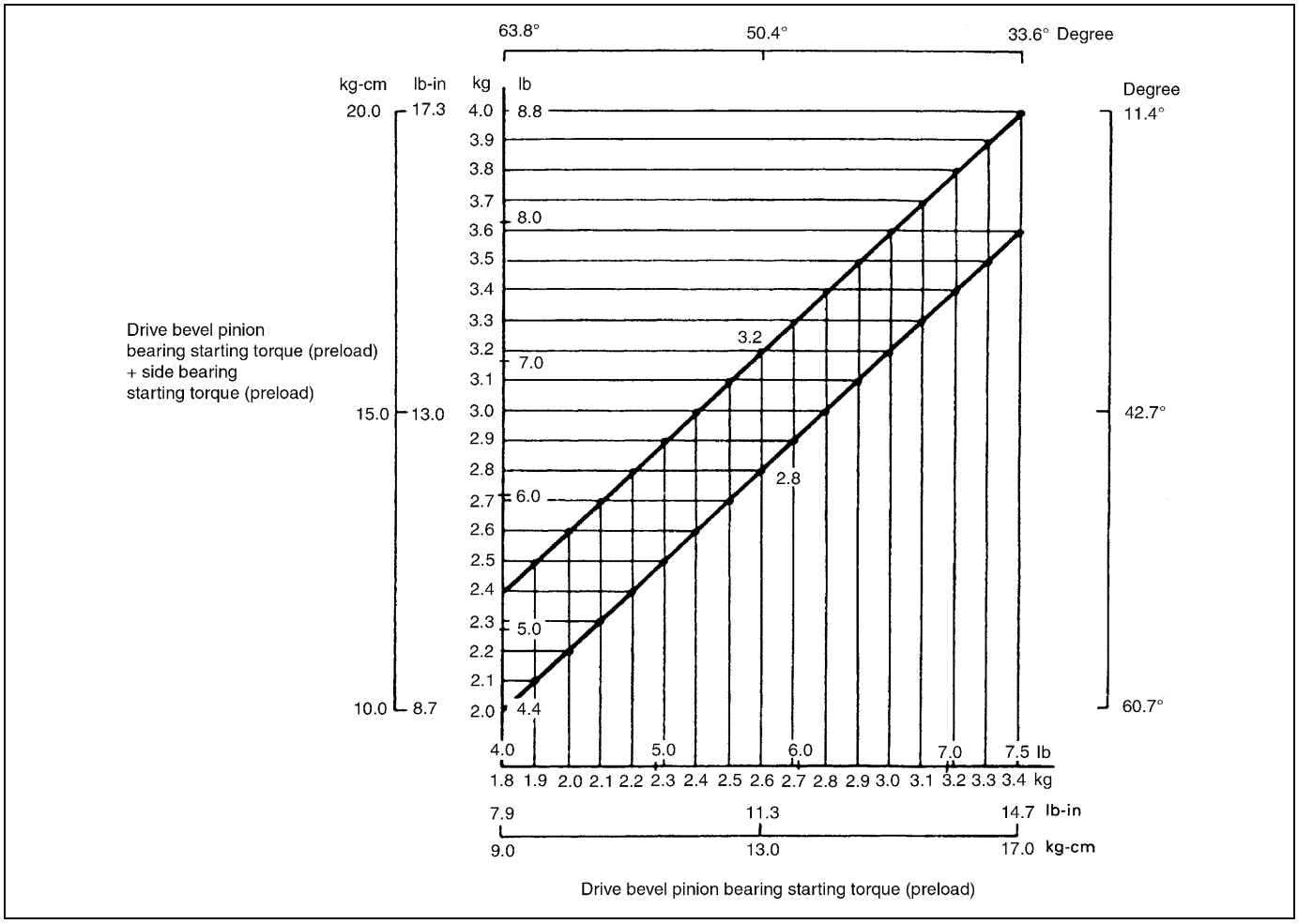

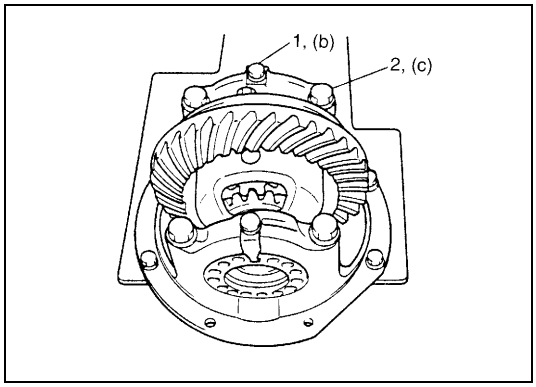

8) Torque bearing cap bolts (2) to specification and install bearing lock plates.

Tightening torque
Lock plate bolt
(b): 12 N·m (1.2 kg-m, 9.0 lb-ft)
Bearing cap bolt
(c): 85 N·m (8.5 kg-m, 61.5 lb-ft)

1. Lock plate bolt

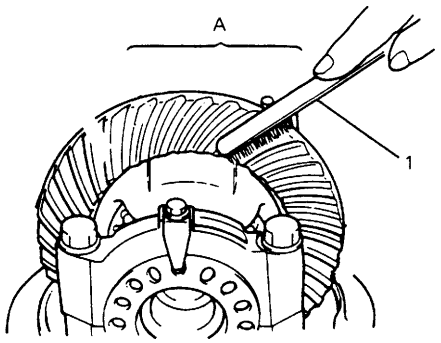

9) As final step, check gear tooth contact as follows.
   a) After cleaning 10 bevel gear teeth, paint them with gear marking compound evenly by using brush or sponge etc.
   b) Turn gear to bring its painted part in mesh with bevel pinion and turn it back and forth by hand to repeat their contact.
   c) Bring painted part up and check contact pattern, referring to the following chart. If contact pattern is not normal, readjust or replace as necessary according to instruction in chart.

NOTE:

Be careful not to turn bevel gear more than one full revolution, for it will hinder accurate check.

1.	Brush
"A":	Paint gear marking compound evenly

TOOTH CONTACT PATTERN	DIAGNOSIS AND REMEDY	
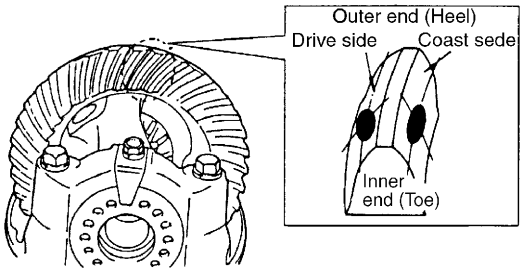	NORMAL	
	HIGH CONTACT Pinion is positioned too far from the center of drive bevel gear. 1) Increase thickness of pinion height adjusting shim and position pinion closer to gear center. 2) Adjust drive bevel gear backlash to specification.	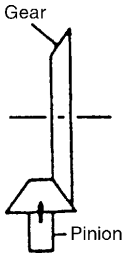
	LOW CONTACT Pinion is positioned too close to the center of drive bevel gear. 1) Decrease thickness of pinion height adjusting shim and position pinion farther from gear center. 2) Adjust drive bevel gear backlash to specification.	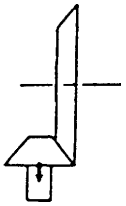
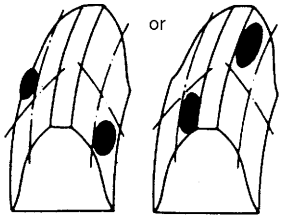	If adjustment is impossible, replace differential carrier.	

TOOTH CONTACT PATTERN	DIAGNOSIS AND REMEDY
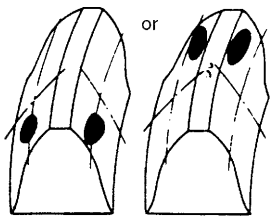	1) Check seating of bevel gear or differential case. (Check bevel gear for runout). 2) If adjustment is impossible, replace drive bevel gear & pinion set or differential carrier.
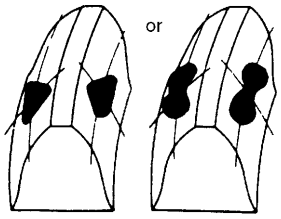	Replace drive bevel gear & pinion set or differential case.

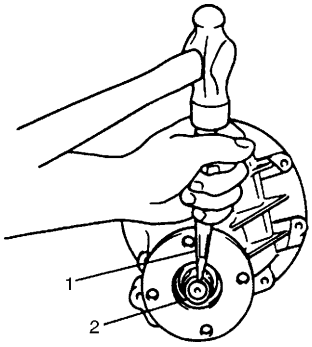

10) Upon completion of gear tooth contact check in Step 8), caulk flange nut (2) with caulking tool (1) and hammer.

Tightening Torque Specification

Fastening part	Tightening torque		
	N•m	kg-m	lb-ft
Bevel gear bolt	85	8.5	61.5
Bearing cap bolt	85	8.5	61.5
Lock plate bolt	12	1.2	9.0
Differential case bolt	41	4.1	30.0
Differential carrier bolt	55	5.5	40.0

Required Service Material

Material	Recommended SUZUKI product (Part Number)	Use
Thread lock cement	THREAD LOCK CEMENT SUPER 1322 (99000-32110)	• Bevel gear bolt • Differential case bolt
Lithium grease	SUZUKI SUPER GREASE A (99000-25010)	• Oil seal lip

Special Tool

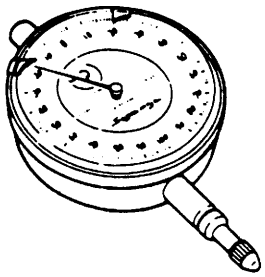 09900-20606 Dial gauge	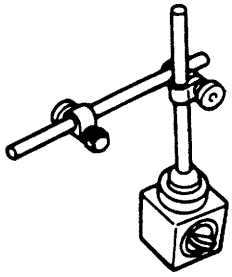 09900-20701 Magnetic stand	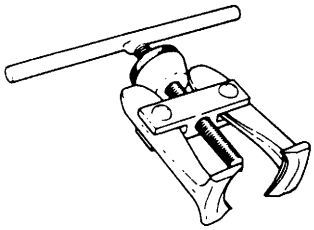 09913-61510 Bearing puller	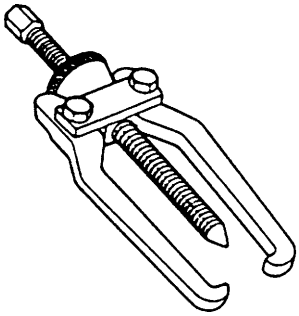 09913-65135 Bearing puller
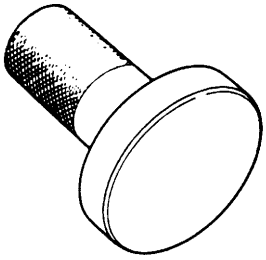 09913-75510 Bearing installer	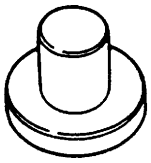 09913-85230 Bearing removing jig	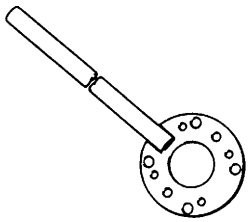 09922-66020 Flange holder	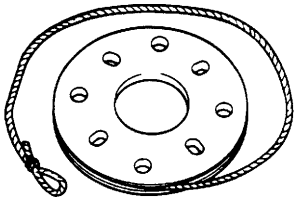 09922-75222 Preload adjuster
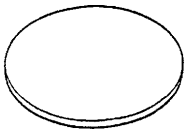 09922-77250 Attachment	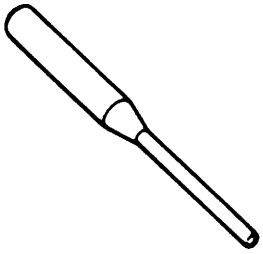 09922-85811 Spring pin remover	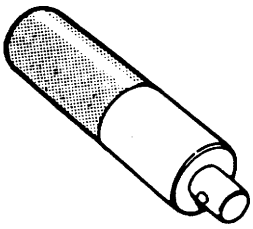 09924-74510 Installer attachment	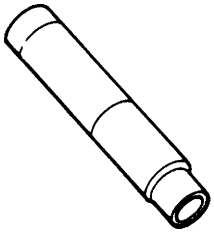 09925-18011 Bearing installer

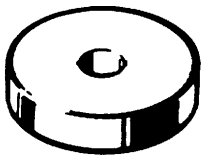 09926-68310 Bearing installer	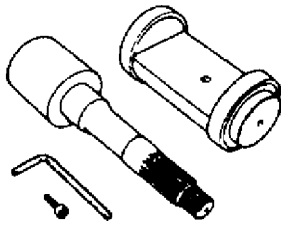 09926-78311 Bevel pinion mounting dummy	 09927-66010/J-23082-01 Oil pump aligner	 09928-06010-002 Differential torque checking tool
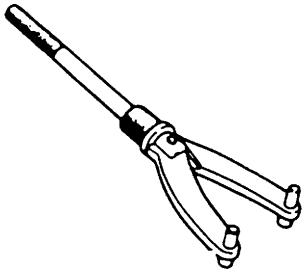 09930-40113 Rotor holder	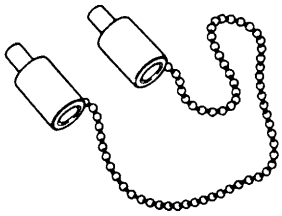 09930-40120 Attachment	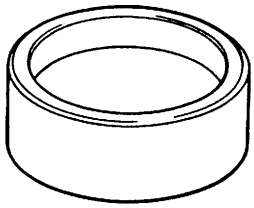 09944-66020 Bearing installer	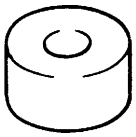 09951-16060 Lower arm bush remover
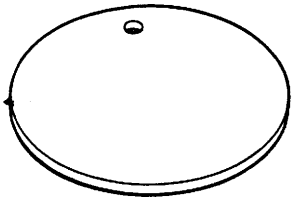 09951-16070 Attachment	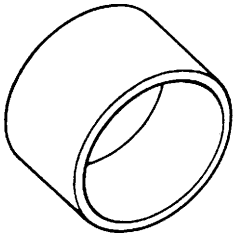 09951-18210 Oil seal remover & installer No. 2	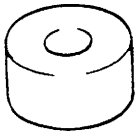 09951-46010 Drive shaft oil seal installer	

H27 AND RHW ENGINE MODELS

General Description

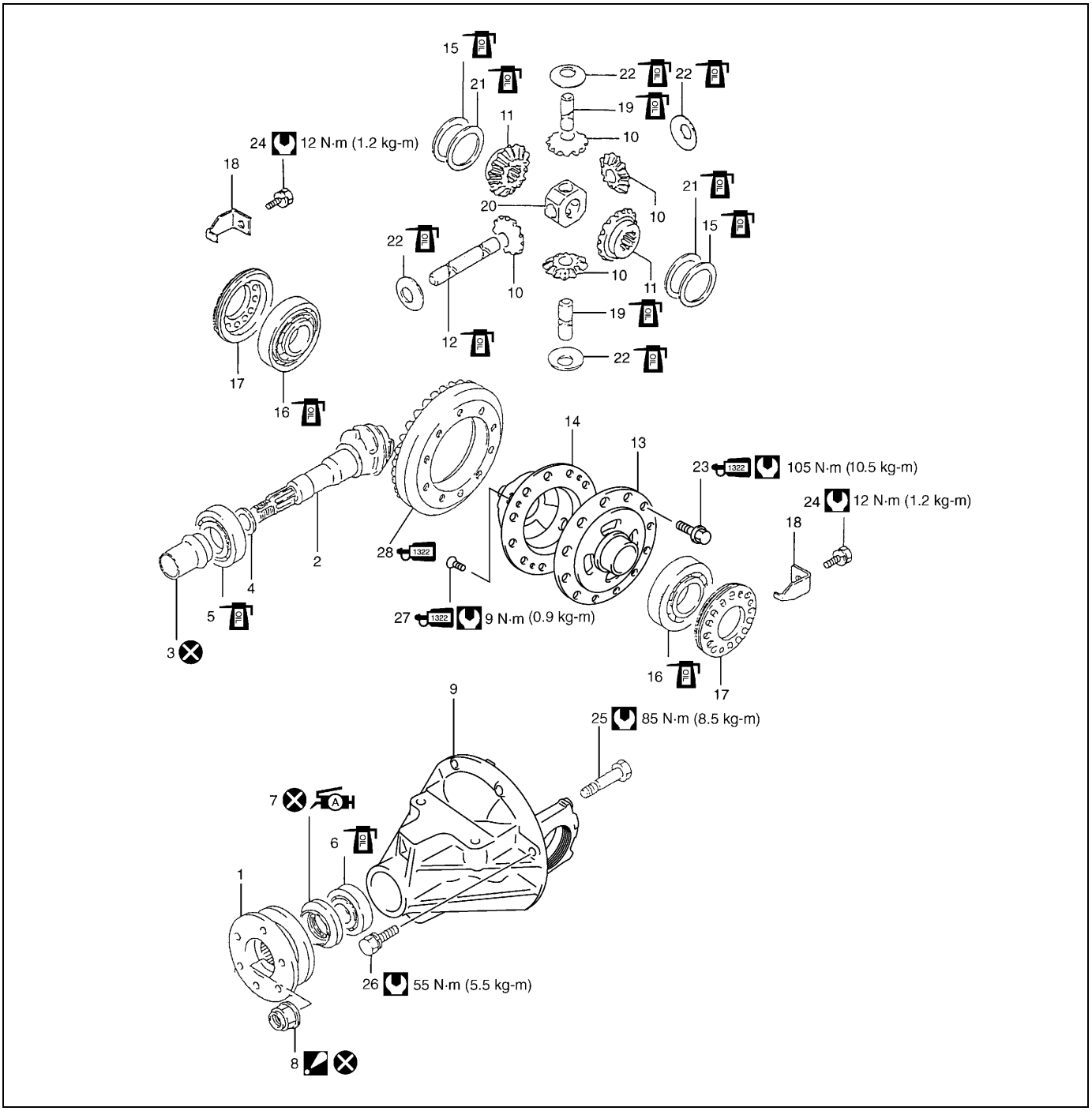

	1.	Universal joint flange	12.	Pinion shaft No.1	23. Bevel gear bolt : Apply thread lock cement 99000-32110 to thread part of bolt.
	2.	Drive bevel pinion	13.	Differential left case	24. Lock plate bolt
	3.	Bevel pinion spacer	14.	Differential right case	25. Bearing cap bolt
	4.	Shim	15.	Thrust washer	26. Differential carrier bolt
	5.	Rear bearing	16.	Differential side bearing	27. Differential case screw : Apply thread lock cement 99000-32110 to thread part of bolt.
	6.	Front bearing	17.	Bearing adjuster	28. Drive bevel gear : Apply thread lock cement 99000-32110 to mating surface of drive bevel gear and differential right case.
	7.	Oil seal : Apply grease 99000-25010 to oil seal lip.	18.	Lock plate	Do not reuse.
	8.	Flange nut : After tightening nut so as rotation torque of bevel pinion shaft to be in specified value, caulk nut securely.	19.	Pinion shaft No.2	Tightening torque
	9.	Differential carrier assembly	20.	Pinion joint	Apply differential oil.
	10.	Differential pinion	21.	Spring washer	
	11.	Differential gear	22.	Washer	

Unit Repair

Disassembling Unit

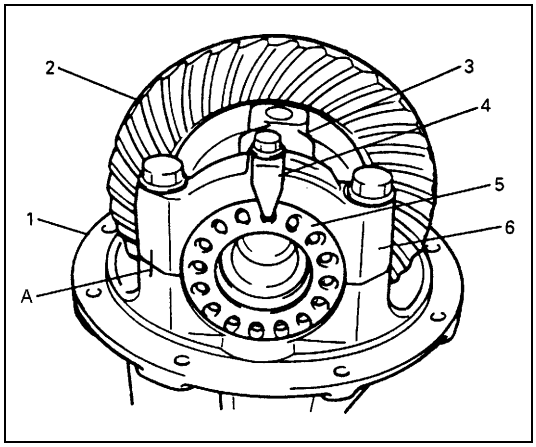

1) Hold differential assembly securely and put identification marks on differential side bearing caps (6).
2) Take off differential side bearing lock plates (4) and differential side bearing caps (6) by removing their bolts and then take out bearing adjusters (5), side bearing outer races and drive bevel gear with differential case.

1.	Differential carrier
2.	Drive bevel gear assembly
3.	Differential case
A:	Identification mark

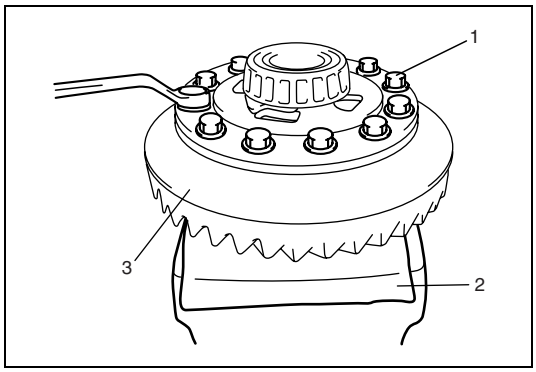

3) Remove drive bevel gear (hypoid gear) (3), differential gears, differential pinions and pinion shafts as follows.
   a) With aluminum plates (2) placed on vise first, grip differential case with it and remove drive bevel gear (hypoid gear) (3) by removing its bolts (1).

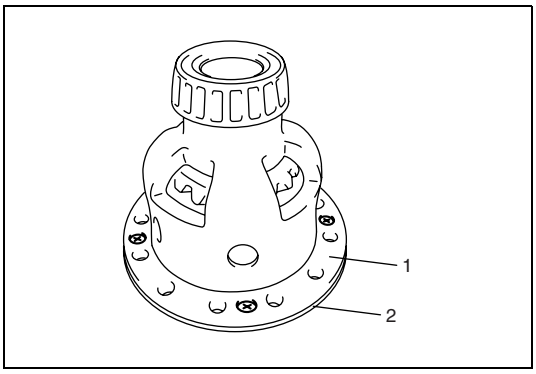

b) Remove differential left case (2) from differential right case (1).

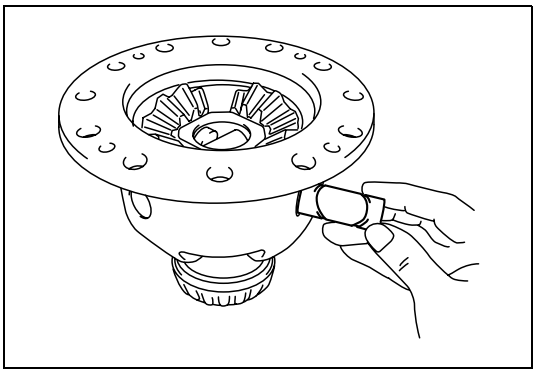

c) Remove pinion shafts, differential gears, washers, differential pinions, spring washers and thrust washers.

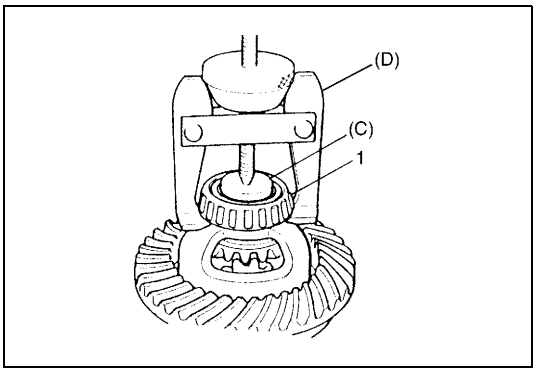

4) Using special tools, pull out differential side bearings (1).

Special tool
(C): 09913-85230
(D): 09913-61510

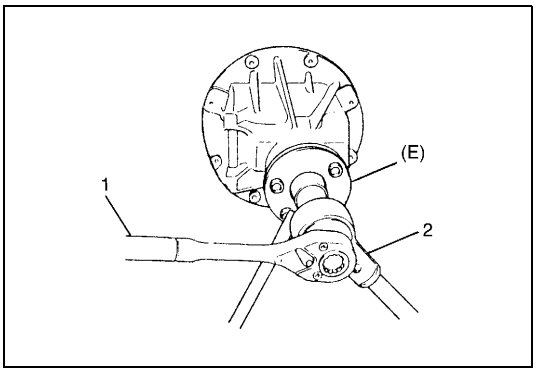

5) Remove drive bevel pinion (hypoid gear) assembly as follows.
   a) Hold universal joint flange with special tool and then remove flange nut by using power wrench (4 – 10 magnification) (2).

Special tool
(E): 09922-66021

1. Socket wrench

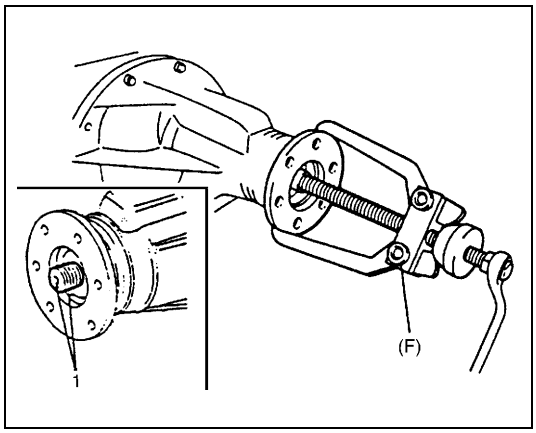

b) Make mating marks (1) on drive bevel pinion and companion flange.

CAUTION:

Don't make mating mark on the coupling surface of the flange.

c) Remove companion flange from drive bevel pinion. Use special tool if it is hard to remove.

Special tool
(F): 09913-65135

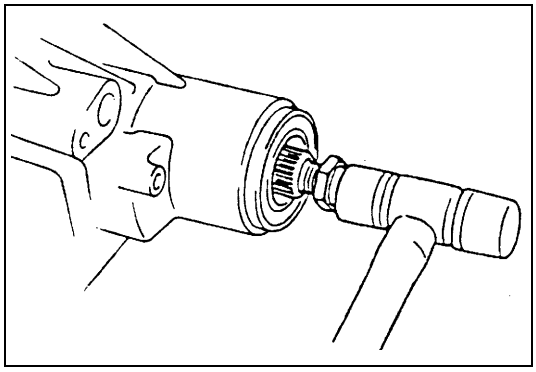

d) Remove drive bevel pinion with rear bearing, shim and spacer from carrier.
If it is hard to remove, screw an used nut into drive bevel pinion and hammer on that nut with a plastic hammer but never directly on drive bevel pinion.

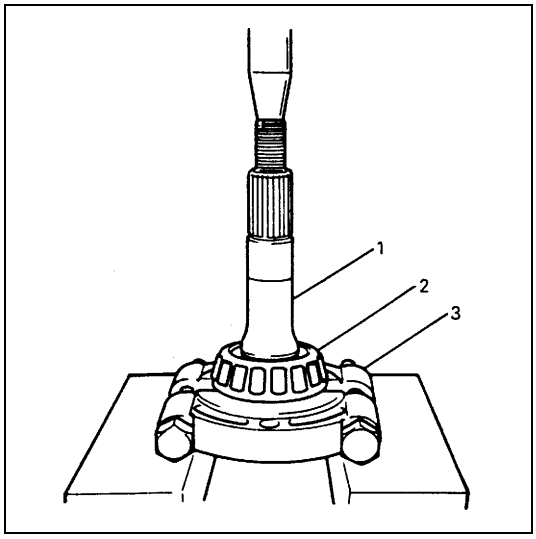

e) Remove drive bevel pinion rear bearing (2) by using bearing puller (3) and press.

1. Drive bevel pinion

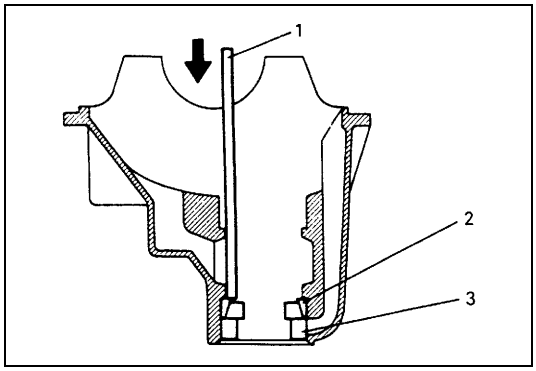

6) Using a hammer and brass bar (1), drive out front bearing outer race with bearing (2) and oil seal (3).

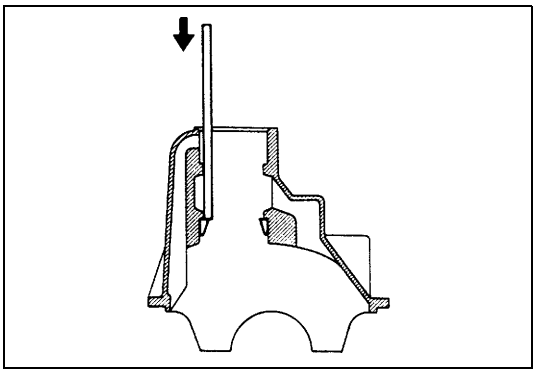

7) Drive out rear bearing outer race in the same way as in the step 6).

Component Inspection

- Check companion flange for wear or damage.
- Check bearings for wear or discoloration.
- Check differential carrier for cracks.
- Check drive bevel pinion and drive bevel gear for wear or cracks.
- Check differential gears, pinions and pinion shafts for wear or damage.
- Check differential gear spline for wear or damage.

Sub-Assembly Adjustment and Reassembly

Judging from faulty conditions noted before disassembly and what is found through visual check of bearing and gear tooth etc. after disassembly, prepare replacing parts and proceed to reassembly according to procedures as described below.

CAUTION:

- **Drive bevel gear and pinion must be replaced as a set when either replacement becomes necessary.**
- **When replacing taper roller bearing, replace as inner race & outer race assembly.**

Differential carrier

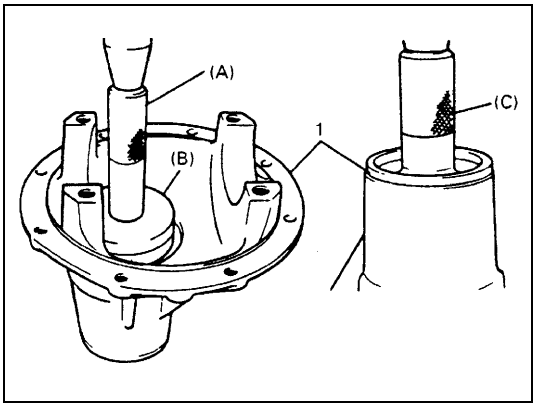

For press-fitting drive bevel pinion bearing outer races, use special tools as shown in the figure.

Special tool
(A): 09924-74510
(B): 09926-68310
(C): 09913-75510

1. Differential carrier

Differential case

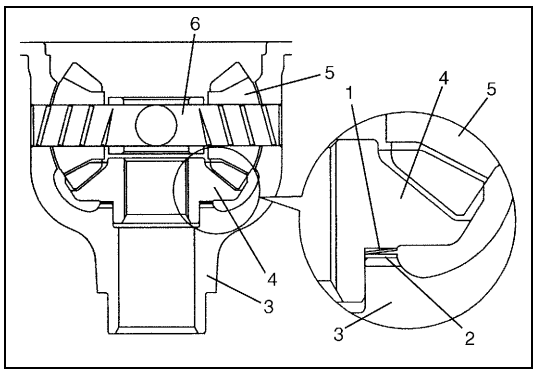

1) After applying differential oil to differential gear (4), pinions (5), pinion shafts (6), thrust washer (2) and spring washer (1), install them in differential right case (3).
   For correct installing direction of thrust washer (2) and spring washer (1), refer to the figure.

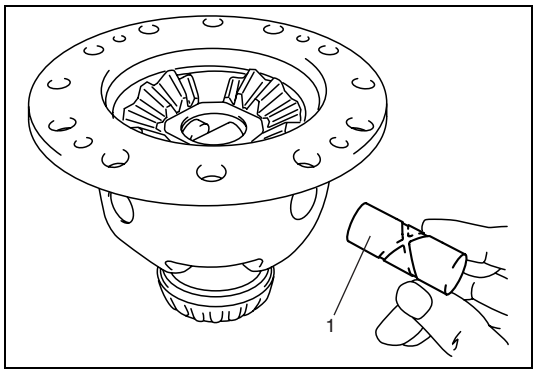

2) When installing pinion shaft No.2 (1) (shorter) into differential case and pinion.

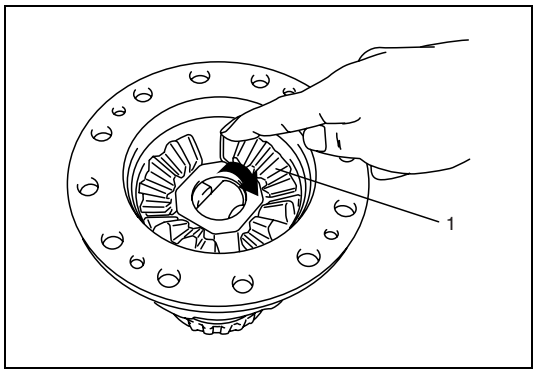

3) Check differential pinion gear (1) for smooth rotation.

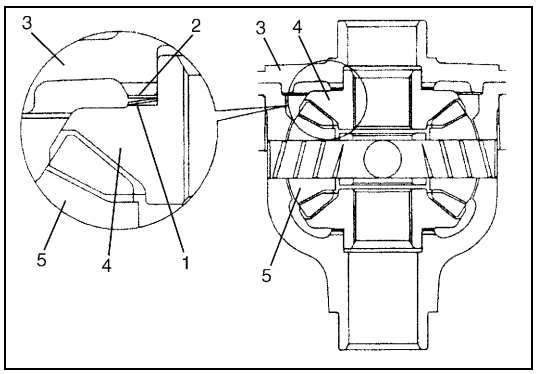

4) In the same manner as described in Step 1), install thrust washer (2), spring washer (1) and differential gear (4).

3.	Differential left case
5.	Differential pinion

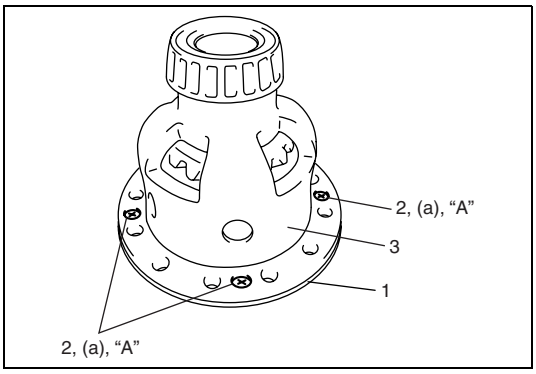

5) Install differential left case (1) and then tighten screws (2) with thread lock cement to specified torque.

“A”: Cement 99000-32110

Tightening torque
Differential case screw
(a): 9 N·m (0.9 kg-m, 6.5 lb-ft)

3 Differential right case

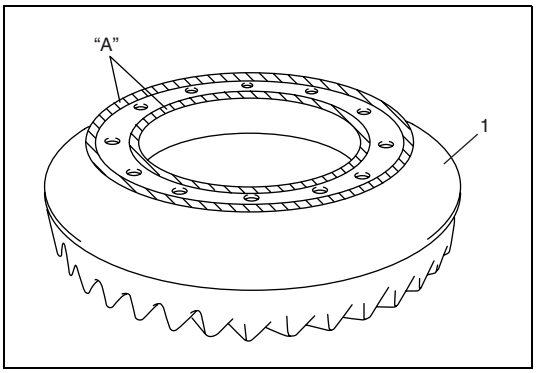

6) Clean and degrease mating surface of drive bevel gear (hypoid gear) (1).
7) Apply thread lock cement to hatched part of drive bevel gear (1) as shown in the figure.

“A”: Cement 99000-32110

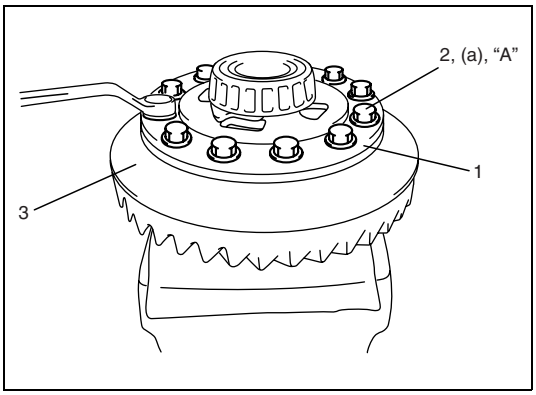

8) Put drive bevel gear (3) on differential case (1).
Tighten bolts (2) thread lock cement to specified torque.

CAUTION:
Use of any other bolts than that specified is prohibited.

“A”: Cement 99000-32110

Tightening torque
Bevel gear bolt (a): 105 N·m (10.5 kg-m, 76.0 lb-ft)

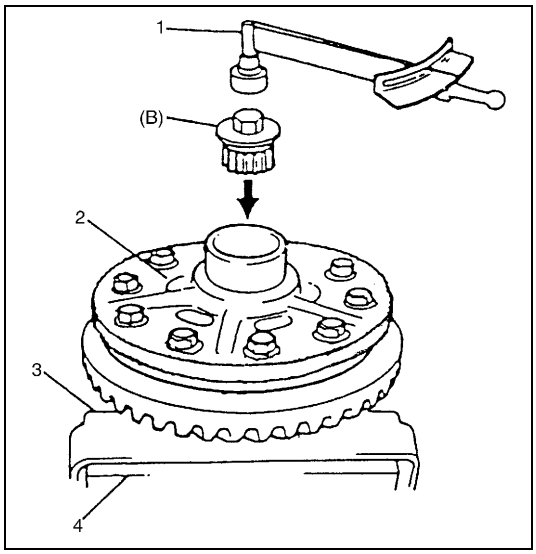

9) Install special tool to differential case assembly and check that preload is within specification below. If preload exceeds specified value, check if foreign matter is caught or gear is damaged.

Special tool
(B): 09928-06510

Side gear preload
: Max. 2.5 N·m (0.25 kg-m, 1.8 lb-ft)

1.	Torque wrench
2.	Differential case assembly
3.	Aluminum plate
4.	Vise

Differential side bearing

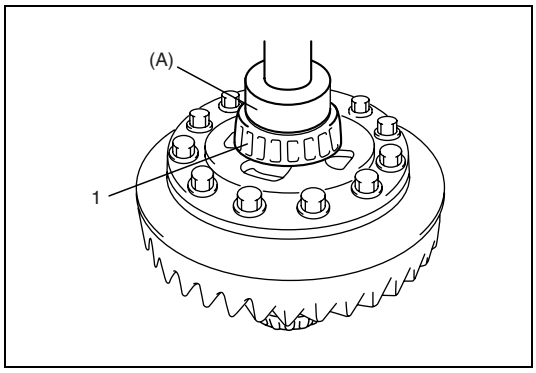

1) Press-fit side bearing (1) with special tool and press.

Special tool
(A): 09944-66020

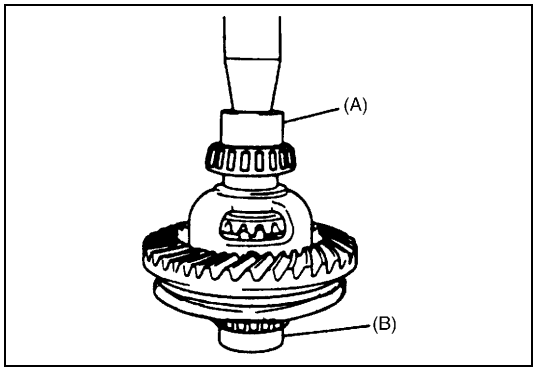

2) Hold bearing press-fitted in Step 1) with holder and press-fit side bearing on the other side.

NOTE:

Be sure to use bearing holder for the purpose of protecting lower bearing.

Special tool
(A): 09944-66020
(B): 09951-16060

Drive bevel pinion

To engage drive bevel pinion and gear correctly, it is pre-required to install drive bevel pinion to differential carrier properly by using adjusting shim as described on the followings. Shown below is relative positions of drive bevel pinion, differential carrier and mounting dummy.

Special tool
(A): 09900-20606
(B): 09926-78320
(C): 09922-75222
(D): 09922-76570
(E): 09951-46010
(F): 09926-78311-002

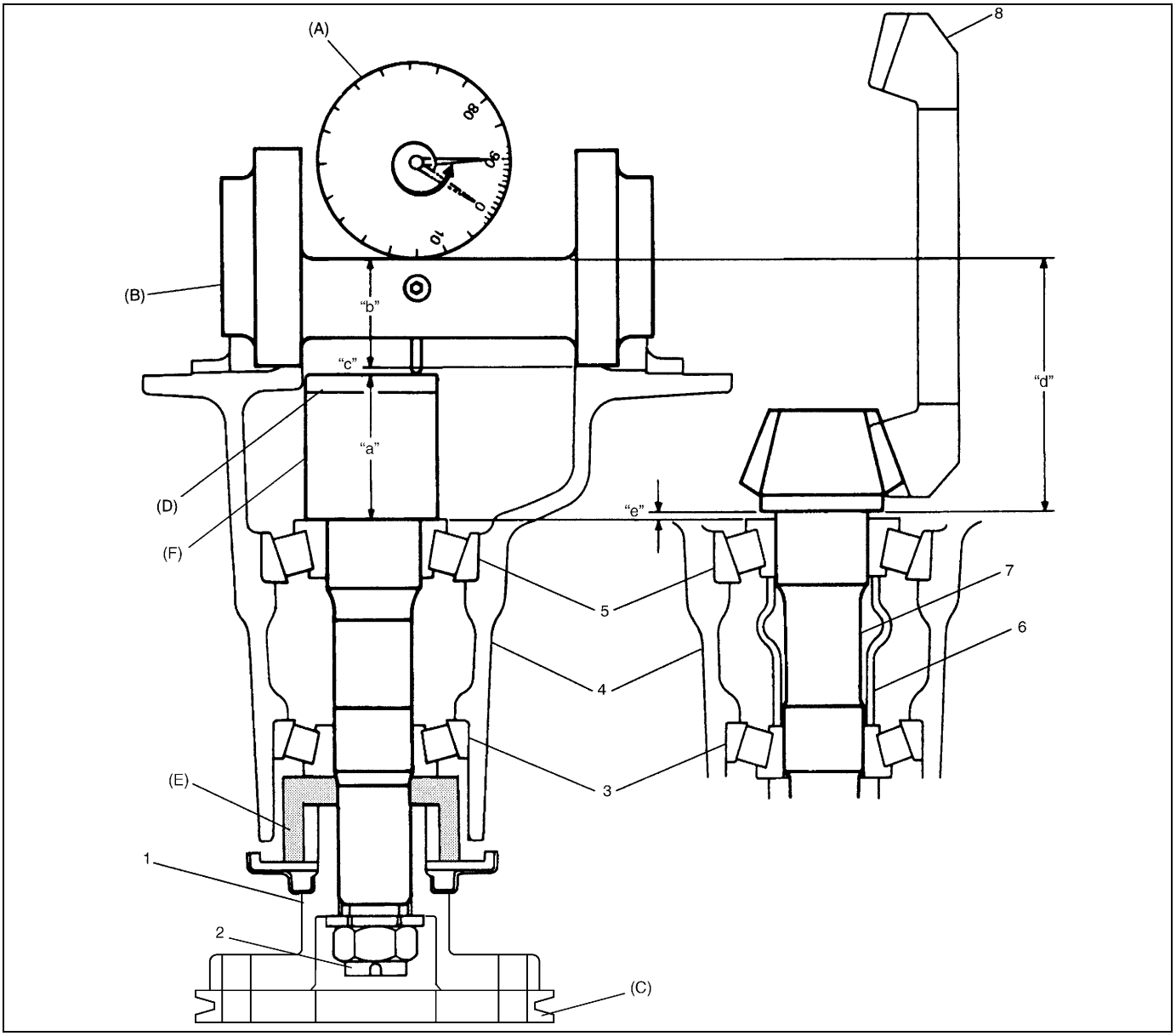

1. Universal Joint flange (P/No. 27110-60A00)	8. Drive bevel gear
2. Flange nut	"a": Pinion dummy height + Attachment height
3. Front bearing	"b": Axle dummy radius
4. Differential carrier	"a" + "b" Mounting dummy size 110.00 mm/4.3307 in.
5. Rear bearing	"c": Measured dimension
6. Spacer	"d": Drive bevel pinion mounting distance 110.00 mm/4.3307 in.
7. Drive bevel pinion	"e": Shim size for mounting distance adjustment (= "c")

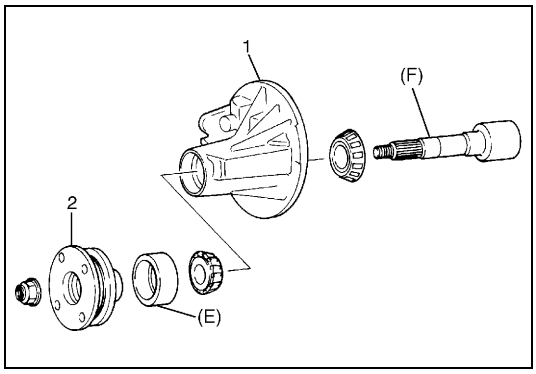

1) Install special tools with bearings and universal joint flange (2) to differential carrier (1).

NOTE:

This installation requires no spacer or oil seal.

Special tool
(E): 09951-46010
(F): 09926-78311-002

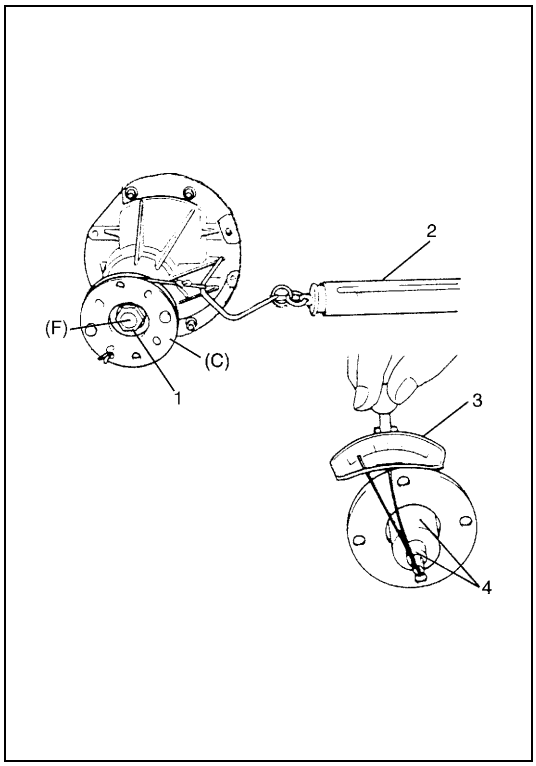

2) Tighten flange nut (1) so that specified bearing preload is obtained.

NOTE:

- **Before taking measurement with spring balance (2) or torque wrench (3), check for rotation by hand and apply small amount of differential oil to bearings.**
- **On measuring preload, rotate the drive bevel pinion about 1 rotation per 2 seconds.**

Special tool
(C): 09922-75222
(F): 09926-78311-002

Pinion bearing preload
: 0.9 – 1.7 N·m (9.0 – 17.0 kg-cm, 7.8 – 14.7 lb-in.)

Spring measure reading with special tool
: 18 – 34N (1.8 – 3.4 kg, 4.0 – 7.5 lb)

4. Socket with adapter

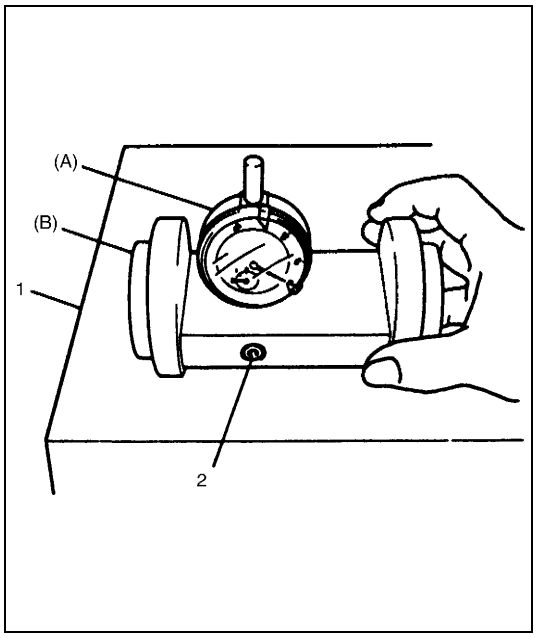

3) Set dial gauge to mounting dummy and make 0 (zero) adjustment on surface plate (1).

NOTE:

- **When setting dial gauge to mounting dummy, tighten screw (2) lightly. Be careful not to overtighten it, which will cause damage to dial gauge.**
- **With dial gauge set, turn dummy back and force by hand a couple of times and attain accurate 0 (zero) adjustment.**
- **It is desirable that short pointer indicates beyond 2 mm (0.08 in.) when long one is at 0 (zero).**

Special tool
(A): 09900-20606
(B): 09926-78320

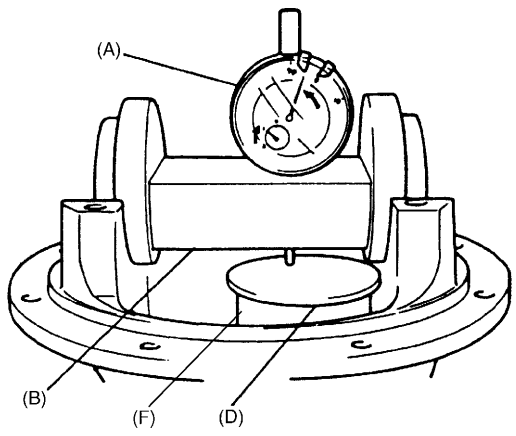

4) Place zero-adjusted mounting dummy and dial gauge set on pinion mounting dummy and take measurement between zero position and extended dial gauge measuring tip.

NOTE:

- **Repeat turning back and force of dummy and measure distance as far as top surface of pinion dummy accurately.**
- **When dial gauge measuring tip extends from 0 (zero) position, pointer turns counterclockwise.**
- **Measured value may exceed 1 mm (0.04 in.). Therefore, it is also necessary to know reading of short pointer.**

Special tool
(A): 09900-20606
(B): 09926-78320
(D): 09922-76570
(F): 09926-78311-002

5) Obtain adjusting shim thickness by using measured value by dial gauge in previous step.

Necessary shim thickness "e"	=	Dial gauge measured value "c"

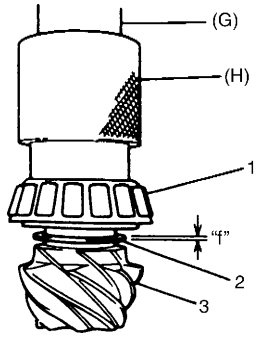

6) Select adjusting shim(s) (2) closest to calculated value from among following available sizes and put it in place and then press-fit rear bearing (1).

Calculated value "f":
Closest value to "e" (refer to Step 5).)

Special tool
(G): 09925-18011
(H): 09927-66010

Available shim thickness
: 1.12, 1.15, 1.18, 1.21,1.24, 1.27, 1.30 and 0.3 mm
(0.044, 0.045, 0.046, 0.047 0.048, 0.049, 0.050 and 0.012 in.)

3. Drive bevel pinion

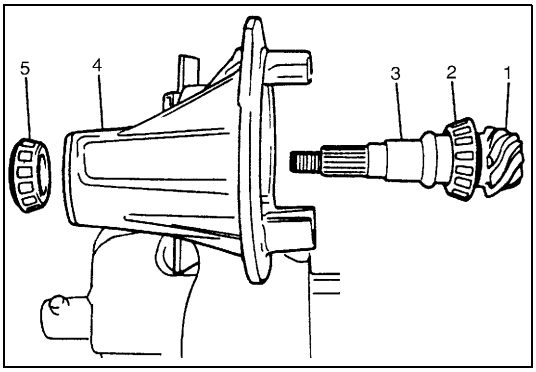

7) With new pinion spacer (3) inserted as shown in the figure, install front bearing (5) to differential carrier (4).

NOTE:

- **Make sure to use new spacer for reinstallation.**
- **Apply differential oil to bearings.**

1. Drive bevel pinion
2. Rear bearing

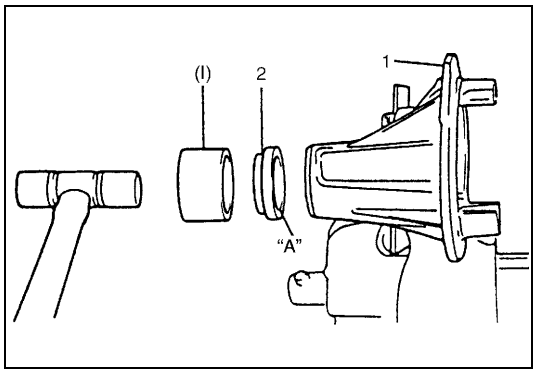

8) Using special tool and plastic hammer, drive oil seal (2) into differential carrier (1) till it becomes flush with carrier end. Then apply grease "A" to oil seal lip.

"A": Grease 99000-25010

Special tool
(I): 09951-18210

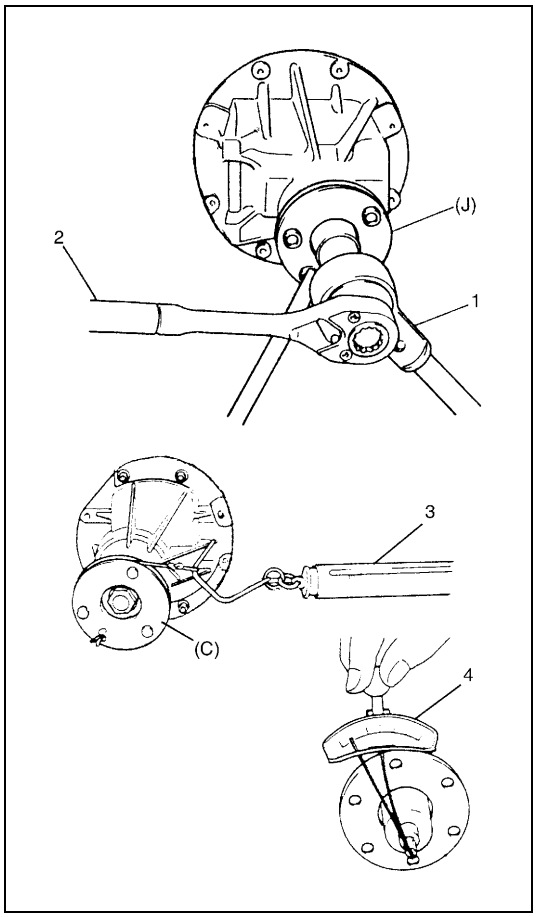

9) While tightening flange nut gradually with special tool and power wrench (4 – 10 magnification) (1), set preload of pinion to specification.

NOTE:

- **Before taking measurement with spring balance (3) or torque wrench (4), check for smooth rotation by hand.**
- **On measuring preload, rotate the drive bevel pinion about 1 rotation per 2 seconds.**
- **Be sure to tighten gradually and carefully till specified starting torque is obtained. Turning back overtightened flange nuts should be avoided.**

Pinion bearing preload
: 0.9 – 1.7 N·m (9.0 – 17.0 kg-cm, 7.8 – 14.7 lb-in.)

Spring measure reading with special tool
: 16 – 30 N (1.6 – 3.0 kg, 3.5 – 6.6 lb)

Special tool
(C): 09922-76560 (H27 engine)
(C): 09922-75222 (RHW engine)
(J): 09922-66021

2. Socket wrench

Assembling Unit

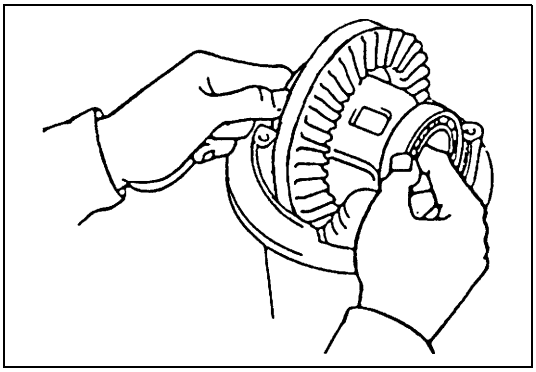

1) Place bearing outer races on their respective bearings. Used left and right outer races are not interchangeable.
2) Install case assembly in carrier.
3) Install side bearing adjusters on their respective carrier, making sure adjuster are threaded properly.

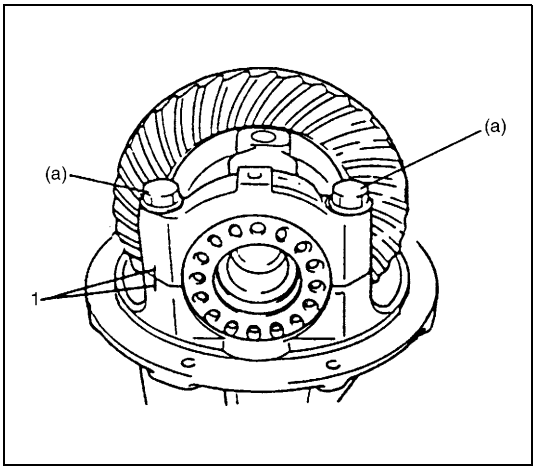

4) Align match marks (1) on cap and carrier. Screw in 2 side bearing cap bolts 2 or 3 turns and press down bearing cap by hand.

NOTE:

If bearing cap does not fit tightly on carrier, side bearing adjuster is not threaded properly. Reinstall adjuster.

5) Tighten cap bolts (provisional torque).

Tightening torque
Bearing cap bolt (Provisional torque)
(a): 15 N·m (1.5 kg-m, 11.0 lb-ft)

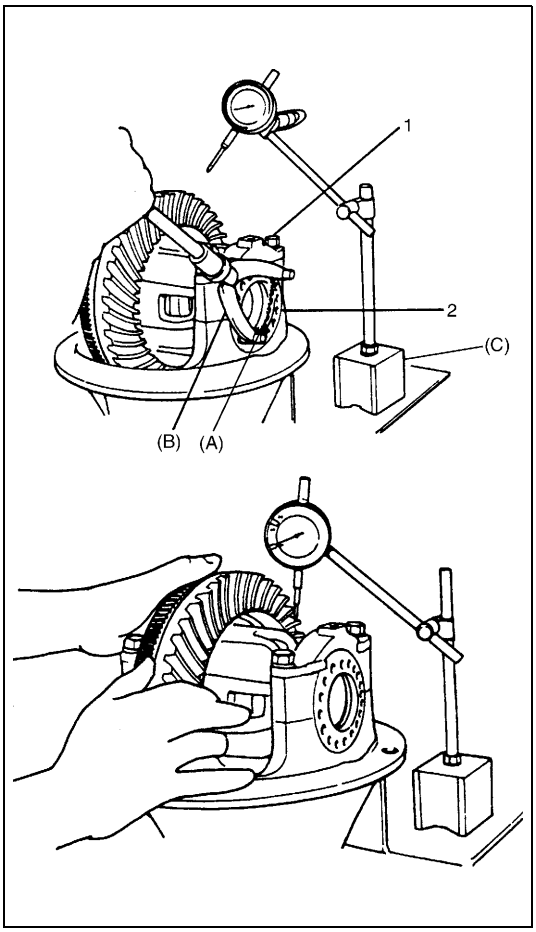

6) Tighten both bearing adjusters (2) so as to obtain specified gear backlash and at the same time, obtain preload of side bearing.

NOTE:

- **Be sure to apply measuring tip of dial gauge at right angles to convex side of tooth.**
- **As a practical measure the following would be recommended to obtain specified backlash and side bearing preload at the same time.**
  - **Obtain specified backlash by turning both adjusters inward lightly.**
  - **Tighten both adjusters further by one notch at a time.**
- **Measure at least 4 points on drive bevel gear periphery.**

Standard backlash
: 0.13 – 0.18 mm (0.005 – 0.007 in.)

Special tool
(A): 09930-40120
(B): 09930-40113
(C): 09900-20701

1. Bearing cap bolt

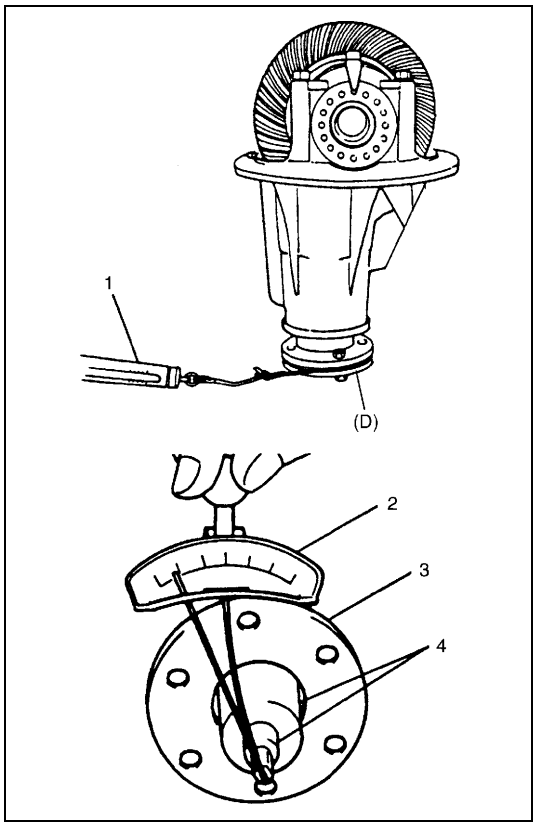

7) Measure preload of pinion bearing with spring balance (1) or torque wrench (2) and check composite preload of pinion bearing and side bearing.

NOTE:

- **Before taking measurement with spring balance (1) or torque wrench (2), check for smooth rotation by hand.**
- **On measuring preload, rotate the drive bevel pinion about 1 rotation per 2 seconds.**

Composite preload of pinion bearing and side bearing
: 1.1 – 2.0 N·m (11.0 – 20.0 kg-cm, 9.5 – 17.4 lb-in.)
Spring measure reading with special tool
: 19.5 – 35.5 N (1.95 – 3.55 kg, 4.30 – 7.83 lb)

Special tool
(D): 09922-76560 (H27 engine)
(D): 09922-75222 (RHW engine)

3.	Universal joint flange
4.	Socket with adapter

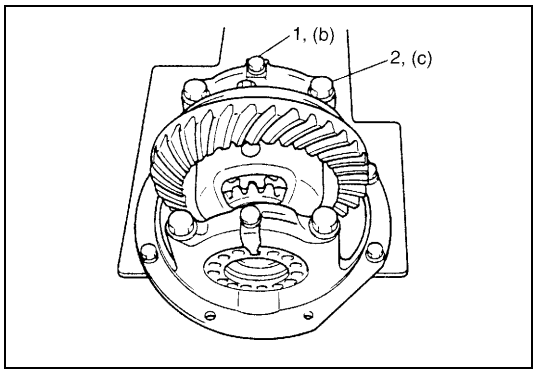

8) Torque bearing cap bolts (2) to specification and install bearing lock plates.

Tightening torque
Lock plate bolt (b): 12 N·m (1.2 kg-m, 9.0 lb-ft)
Bearing cap bolt (c): 85 N·m (8.5 kg-m, 61.5 lb-ft)

1.	Lock plate bolt

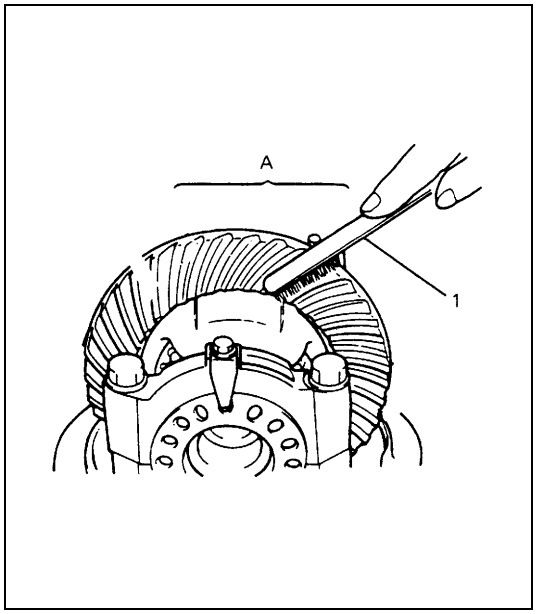

9) As final step, check gear tooth contact as follows.
   a) After cleaning 10 drive bevel gear teeth, paint them with gear marking compound evenly by using brush or sponge etc.
   b) Turn gear to bring its painted part in mesh with drive bevel pinion and turn it back and forth by hand to repeat their contact.
   c) Bring painted part up and check contact pattern, referring to following chart. If contact pattern is not normal, readjust or replace as necessary according to instruction in chart.

NOTE:

Be careful not to turn drive bevel gear more than one full revolution, for it will hinder accurate check.

1.	Brush
"A":	Paint gear marking compound evenly

TOOTH CONTACT PATTERN	DIAGNOSIS AND REMEDY	
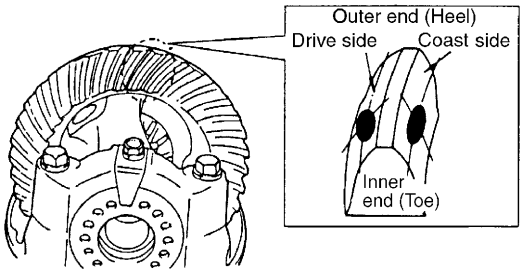	NORMAL	
	HIGH CONTACT Pinion is positioned too far from the center of drive bevel gear. 1) Increase thickness of pinion height adjusting shim and position pinion closer to gear center. 2) Adjust drive bevel gear backlash to specification.	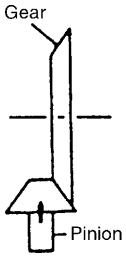
	LOW CONTACT Pinion is positioned too close to the center of drive bevel gear. 1) Decrease thickness of pinion height adjusting shim and position pinion farther from gear center. 2) Adjust drive bevel gear backlash to specification.	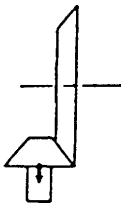
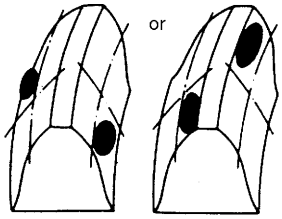	If adjustment is impossible, replace differential carrier.	
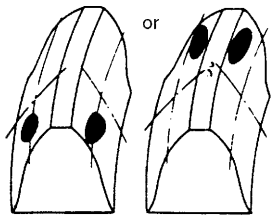	1) Check seating of bevel gear or differential case. (Check bevel gear for runout). 2) If adjustment is impossible, replace drive bevel gear & pinion set or differential carrier.	
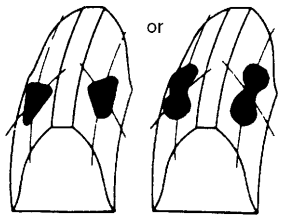	Replace drive bevel gear & pinion set or differential case.	

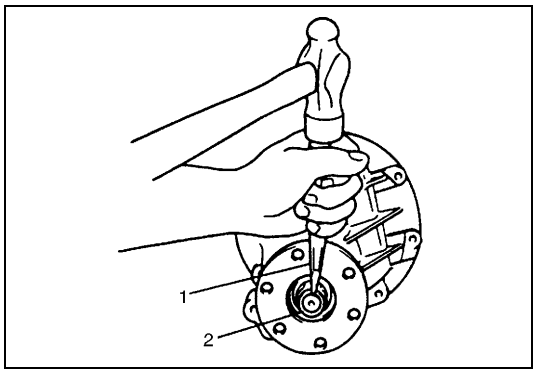

10) Upon completion of gear tooth contact check in Step 9), caulk flange nut (2) with caulking tool (1) and hammer.

Tightening Torque Specification

Fastening part	Tightening torque		
	N•m	kg-m	lb-ft
Differential carrier bolt	55	5.5	40.0
Bevel gear bolt	105	10.5	76.0
Bearing cap bolt	85	8.5	61.5
Lock plate bolt	12	1.2	9.0
Differential case screw	9	0.9	6.5

Required Service Material

Material	Recommended SUZUKI product (Part Number)	Use
Thread lock cement	THREAD LOCK CEMENT SUPER 1322 (99000-32110)	• Bevel gear bolt • Differential case screw • Bevel gear mating surface • Propeller shaft flange bolt
Lithium grease	SUZUKI SUPER GREASE A (99000-25010)	Oil seal lips

Special Tool

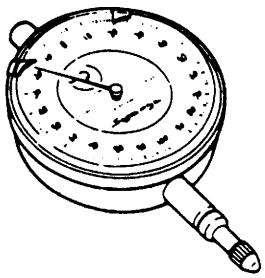 09900-20606 Dial gauge	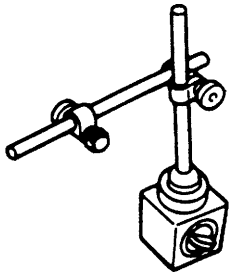 09900-20701 Magnetic stand	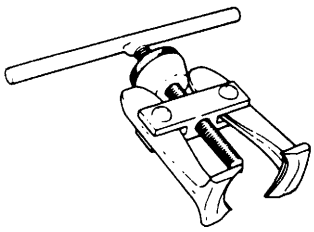 09913-61510 Bearing puller	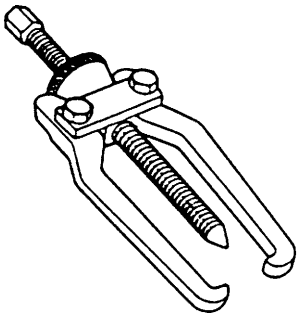 09913-65135 Bearing puller
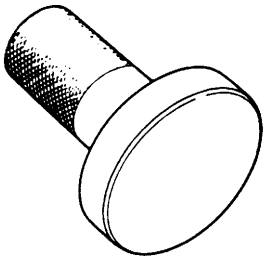 09913-75510 Bearing installer	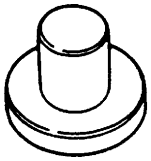 09913-85230 Bearing removing jig	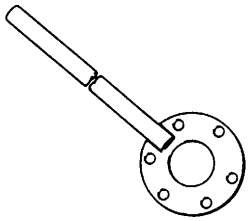 09922-66021 Flange holder	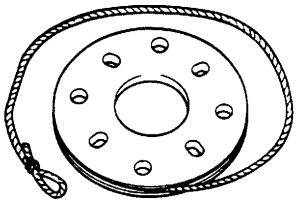 09922-75222 Preload checking tool
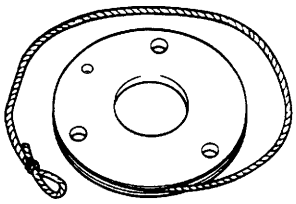 09922-76560 Preload checking tool	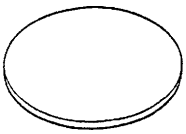 09922-76570 Attachment	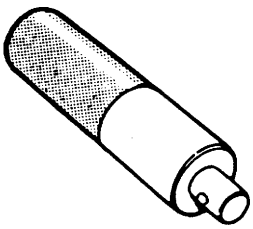 09924-74510 Installer attachment	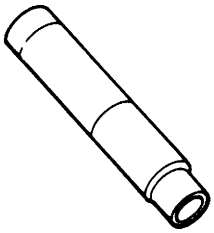 09925-18011 Bearing installer
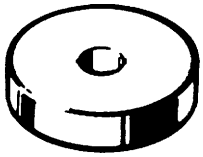 09926-68310 Bearing installer	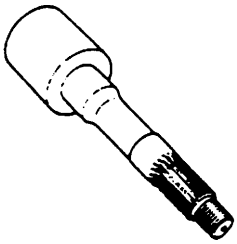 09926-78311-002 Pinion mounting dummy (See NOTE.)	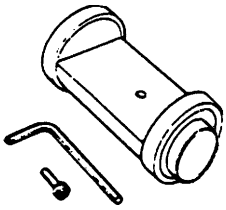 09926-78320 Mounting dummy	 09927-66010/J-23082-01 Oil pump aligner

 09928-06510 Differential torque checking tool	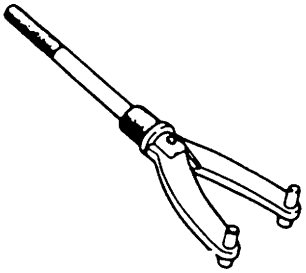 09930-40113 Rotor holder	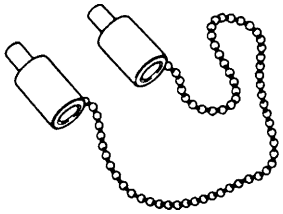 09930-40120 Attachment	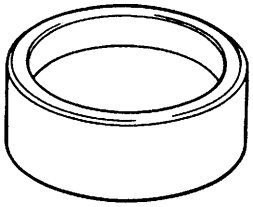 09944-66020 Bearing installer
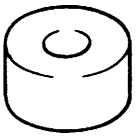 09951-16060 Lower arm bush remover	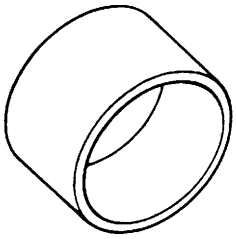 09951-18210 Oil seal remover & installer No. 2	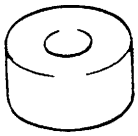 09951-46010 Drive shaft oil seal installer	

NOTE:

This tool is constituent of tools with 09926-78311.

Prepared by

SUZUKI MOTOR CORPORATION

1st Ed. Sep., 2003

Printed in Japan

Printing: 388